1325.8

ATTACHMENT 1

Rec'd 6/12
1012

United States Government

Department of Energy

memorandum

Bob W. – FYI
Action – review
by Sue Smiley
cc: POD's

DATE: June 10, 2003

REPLY TO ATTN OF: EM-22.2 (Steve Golian, (301) 903-7791)

SUBJECT: Transition of Long-Term Response Action Management Requirements

TO: Distribution

The purpose of this memorandum is to provide you with additional guidance for planning the transition of long-term response action management requirements to receiving Program Secretarial Offices (PSO) once the Environmental Management (EM) program has completed its mission at a site. The attached fact sheet, which outlines the planning and documentation need to facilitate the transition process, has been prepared as a companion guide to the previously issued EM completion definitions fact sheet.

A key tenet of transition is early involvement with the receiving PSO. Therefore, EM managers responsible for National FOCUS Project sites (see attached list) should begin transition planning with the appropriate PSO if they have not done so already.

If you have any questions, please contact me at (202) 586-7710 or Ms. Cynthia Anderson, Manager, National FOCUS Project, at (803) 725-3966 or cynthia.anderson@srs.gov.

Jessie Hill Roberson
Assistant Secretary for
Environmental Management

Attachments

Distribution

Robert F. Warther, Manager, Ohio Field Office (OH)
Keith A. Klein, Manager, Richland Operations Office (RL)
Roy J. Schepens, Manager, Office of River Protection (ORP)
Eugene C. Schmitt, Manager, Rocky Flats Field Office (RF)
Jeffrey M. Allison, Manager, Savannah River Operations Office (SR)
Dr. Inés Triay, Manager, Carlsbad Field Office (CBFO)
William E. Murphie, Manager, Portsmouth/Paducah Project

Elizabeth D. Sellers, Manager, Idaho Operations Office (ID)
Linton F. Brooks, Administrator, National Nuclear Security Administration, NA-1
Michael W. Owen, Director, Office of Worker and Community Transition, WT-1

cc:
Robert G. Card, S-3
Dr. James F. Decker, Principal Deputy Director, Office of Science, SC-2
Tyler Przybylek, Acting Chief Operating Officer, NA-1
Milton Johnson, Chief Operating Officer, SC-3
Marvin E. Gunn, Jr., Manager, Chicago Operations Office (CH)
Kathleen Carlson, Manager, Nevada Site Office (NV)
Camille Yuan-Soo Hoo, Manager, Livermore Site Office (LSO)
Gerald Boyd, Manager, Oak Ridge Operations Office (OR)
Paul M. Golan, Chief Operating Officer, EM-3
Sandra Johnson, Director, EM-5
Jay Rhoderick, Director, EM-6
Dr. Barbara D. Male, Director, EM-7
Roger Butler, Deputy Assistant Secretary, EM-10
Patrice M. Bubar, Associate Deputy Assistant Secretary, EM-20
Mark Frei, Deputy Assistant Secretary, EM-30/40
James M. Owendoff, Deputy Assistant Secretary, EM-50

Office of Environmental Management Corporate Projects Initiative

National FOCUS Project

June 2003

EM Completion: Transitioning LTRA Responsibilities

This fact sheet is intended to provide Environmental Management (EM) managers with an overview of the planning and documentation needed when EM's cleanup mission is nearing completion and management requirements for long-term response actions (LTRA) are being transitioned to another Program Secretarial Office (PSO). As part of the transition process, EM managers need to ensure that: 1) the environmental condition of the facility(ies) or property is clearly established and documented; 2) the receiving PSO is sufficiently informed of the specific operation, maintenance or surveillance requirements for all LTRAs (e.g., containment cells, ground water treatment systems, etc.); and 3) the receiving PSO has adequate time to incorporate associated out-year resource requirements into future budget requests so the necessary resources are in place at the time of transfer.

INTRODUCTION

As EM is completing its cleanup project(s) at a site and preparing to acquire Critical Decision-4 (CD-4) for project closeout and transition, there can be several possible EM "end state" scenarios depending on the level of cleanup achieved.[1] There may be areas where restoration to an unrestricted use was attained, areas requiring only institutional controls, or areas with response actions that require either long-term care (e.g., capped landfills) or long-term operation (e.g., ground water pump and treat systems).[2] Regardless of the specific LTRA requirements that remain at EM completion, the keys to successful transition are (1) a thorough compilation of the environmental conditions and associated management responsibilities of the property/facility being transferred and (2) early communication and planning with the receiving PSO.

[1] As specified in DOE Manual 413.3-1, "Project Management for the Acquisition of Capital Assets," transition and closeout is the progression of a project from implementation to turnover for operations. For environmental restoration projects, initial operating capability may be defined as the transition to long-term maintenance and surveillance. This occurs at Critical Decision-4 for project closeout and transition.

[2] See *Definition of EM Completion and DOE Site Closure* fact sheet, January 2003.

DOCUMENTING EM's "END-STATE"

The essential information that is necessary to document the environmental end state of EM projects at the point of EM completion should be available in the existing documents generated over the life of the cleanup. Therefore, existing sources of information should simply be referenced as opposed to creating a new report.

In general, the critical information to support the management of LTRAs will be the operation, maintenance, or surveillance requirements typically found in operation and maintenance (O&M) manuals or long-term stewardship plans. However, in order to be able to effectively evaluate and interpret monitoring data over time, additional information regarding a remedy's expected performance will be necessary.

Therefore, for long-term surveillance and maintenance (S&M) response actions (e.g., at containment cells and burial grounds), referenced documentation should describe the conditions, assumptions, and performance specifications upon which the designed system is based (design basis). For long-term O&M actions (e.g., ground water pump and treat systems), referenced documentation should provide details on the performance model (and metrics). The documentation should also provide the decision criteria for establishing when a cleanup objective

has been met and the thresholds for triggering the need for implementing a contingency plan.[3,4] References to any uncertainty analyses used to support response selection (including land use assumptions and institutional control requirements) should be included.[5] An example of a response action reference matrix is provided in Highlight 1.

[Note: As indicated previously, the above information should be in existing documentation. However, if it does not exist or is not documented adequately, this information should be developed and compiled during the transition process.]

Although the primary focus of post-completion documentation will be on LTRAs, documentation clarifying how cleanup objectives were met for completed response actions (no land use restrictions remain) should also be referenced.

Post-Completion Conceptual Site Model

As a companion document to the response action reference matrix, a post-completion conceptual site model (CSM) can be used to help illustrate how environmental contamination and exposure pathways of concern were addressed. The CSM can also illustrate how administrative or engineered barriers are being used to control exposure to residual waste (see Highlight 2). Depending on the size of the site and the number of remedies implemented, multiple post-completion CSMs may be needed.

PLANNING THE TRANSITION

At least three years prior to the actual transfer of LTRA management requirements, EM managers should initiate discussions with representatives from the receiving PSO to ensure they sufficiently understand their pending LTRA responsibilities and have time to factor these new requirements into their future budget requests. EM managers should work with the receiving PSO to develop a transition strategy that clarifies: 1) the expected date(s) of transfer; 2) the likely LTRA requirements and associated information management responsibilities; and 3) the projected costs and technical support needed to carry out those requirements and responsibilities.

Once approved by the Acquisition Executive (AE), the transition strategy should be discussed with the site's stakeholders so interested parties are fully aware of how protection of human health and the environment will be maintained following the completion of EM's mission at the site.

Date of Transfer: Although it is generally assumed that the date of EM completion and LTRA transition will occur at a single point in time (typically the end of a fiscal year), receiving PSOs may take over LTRA requirements as projects or portions of a site are completed. Thus, transition can occur in phases as cleanup progresses. However, should a receiving PSO agree to accept LTRA requirements early, budget authority/targets to implement the associated O&M responsibilities may have to be formally transferred through a Program Budget Decision Document issued by the Department's Chief Financial Officer.[6]

Regardless if O&M responsibilities are transferred early, the date of EM completion and LTRA transition needs to be clearly established at least three years in advance so the respective PSO is able to adequately plan. This is important because the funding requirements for LTRA must be considered in out-year budget formulation and subsequent requests to Congress.

Although formal correspondence will be used to notify receiving PSOs that EM has completed its mission at a site, the designated AE will formalize the actual transition upon approval of CD-4.

Information Management: The management of information is critical to the transition of LTRA requirements. Ideally, information management should begin at the time a response action is selected (e.g., a Record of Decision is signed).

[3] See *Guidance for Optimizing Ground Water Response Actions at Department of Energy Sites*, May 2002.

[4] See *Developing Exit Strategies for Environmental Restoration Projects*, March 2000.

[5] See U.S. DOE, U.S. EPA, *Uncertainty Management: Expediting Cleanup through Contingency Planning*, February 1997.

[6] As clarified in the EM Completion and Site Closure fact sheet, post-construction complete activities are characterized as "O&M" requirements and do not constitute "LTRA" requirements until the date of actual transfer.

Critical information includes: 1) the EM Completion end-state configuration (e.g., final technical drawings); 2) O&M/S&M requirements; 3) historical performance data (e.g., trends in contaminant reduction); 4) regulatory permitting, reporting and remedy review requirements; and 5) LTRA cost estimates (discussed further below). Other information pertinent to the safe maintenance or preservation of the site, including the preservation of cultural (e.g., historically significant sites) or natural resources are also important considerations.

[NOTE: Applying a requirements-based approach will facilitate the identification and retention of essential post-EM Completion information needs.]

Developing the LTRA cost estimate: The projected annual LTRA operating, monitoring, and maintenance costs, and schedule of required activities needs to be developed in order to assist the receiving PSO in developing future budget requests. For each LTRA, references should provide the assumptions used to develop cost estimates and activity schedules (e.g., inspection dates), including necessary reporting or regulatory requirements (e.g., CERCLA five-year reviews, post-closure RCRA permit renewals).

EM managers will need to determine on a site-specific basis the particular type of information and the appropriate level of detail needed to effectively facilitate transition. For example, a site cleaned up to unrestricted use will need to document cleanup accomplishments but not prepare an outyear cost/schedule profile for management requirements.

EM BUSINESS CLOSEOUT

In addition to working with the receiving PSO to ensure they are fully prepared to manage LTRA requirements, EM managers will need to concurrently address several administrative requirements for terminating its work at the site.

Records Management: In general, the receiving PSO will be the "owner" of the site's environmental records. As such, they will be responsible for managing the post-completion documentation regarding on-site residual wastes and associated LTRA management activities.

[NOTE: For sites where EM is the current landlord, the Office of Legacy Management (LM) will be responsible for all post-EM completion records management. For non-EM sites with an ongoing mission, the receiving PSO may prefer to have LM, with the needed approvals, manage cleanup records not essential to LTRA management.]

As part of the transition process, EM managers should work with the receiving PSO to establish the appropriate disposition for the myriad of documentation generated during the cleanup process that will not be needed routinely to carry out LTRA management. Considerations in record disposition include, but are not limited to: 1) the temporary storage of records in a facility approved by the National Archives and Records Administration (NARA) pending the expiration of their retention period; 2) the transfer of permanent records to NARA; 3) the destruction of records that have met their retention period; and 4) the archiving of records electronically. The plan to disposition (closeout) this record is an integral component of site transition and will need to comply with NARA and DOE requirements.

Because the variety and volume of cleanup-related documentation for a site can be extensive, its disposition may require a substantial level of effort. Therefore, EM managers should not wait until the point of EM completion to allocate resources to this task.

Workforce/Contract Closeout: In situations where EM issued a contract for cleanup at a site and LTRA management will be handled under a different contract managed by the receiving PSO, EM will be responsible for the close out of its contract including reassigning or downsizing the EM workforce. This situation will likely exist at sites with no continuing mission (i.e., EM completion constitutes DOE site closure).

In situations non-EM Federal personnel and contractors performed EM-funded cleanup, the receiving PSO will be responsible for any workforce/contractor management issues.

[NOTE: Contract closeout, which can take an extended period of time, is not required for CD-4 or the transition of LTRA requirements.]

Highlight 1: Example Response Action Reference Matrix

Remedy	Waste Description	Remedy Description and RAOs	Performance Expectations	Monitoring Parameters	Key Uncertainties	Contingencies	Long-term Management Requirements
In Place Remedy: Cap	1, 2, 3, 4	6, 7, 8	6, 7, 9	6, 7, 10, 11, 12	28	6, 13	9, 10, 11, 12
In Place Remedy: SVE	1, 2, 3, 4	2, 3, 5, 6, 13, 14	5, 6, 8, 9, 10	15, 16, 17, 18	28	14, 15, 16	15
GW Remedy In Place: MNA	1, 2, 3, 4	3, 19, 20, 22, 23	21, 24, 25	22, 23	28	23, 25	23, 24
GW Remedy In Place: ICs/Restrictions		26, 27			28		

Industrial Landfill References/Documentation

(1) Richardson Weapons Site Historical Records Survey Report, Environmental Engineering Division, 1991
(2) Acme Environmental, 1988. Richardson Weapons Site Preliminary Assessment and Site Investigation.
(3) Acme Environmental, 1992. Richardson Weapons Site Expanded Site Investigation and Groundwater Report.
(4) Acme Environmental Services (AES). Richardson Weapons Site Industrial Landfill Remedial Investigation and Feasibility Study, 1990.
(5) AES, 1991. Richardson Weapons Site Industrial Landfill Proposed Plan and Comment Response Summary.
(6) US Department of Energy, Richardson Weapons Site, Environmental and Engineering Division. 1992. *Richardson Weapons Site Industrial Landfill Record of Decision.*
(7) ABC Engineering. 1993. Remedial Design (100% Design Document) and Workplan for Industrial Landfill Cap
(8) ABC Engineering. 1995. Industrial Landfill Construction Complete Report.
(9) ABC Engineering. 1995. Long-term Surveillance and Preventative Maintenance Plan for Industrial Landfill Cap.
(10) Data R Us, Inc. Annual Air and Groundwater Monitoring Reports. 1995-2002. (Data contained in site database and site-wide GIS)
(11) ABC Engineering. Annual Cap Inspection and Corrective Measures Reports. 1995-2002.
(12) Acme Environmental Services (AES), *Richardson Weapons Site 5 year Review Report, Operable Unit 2.* June 2000.
(13) ABC Engineering. 1993. *Remedial Design (100% Design Document) and Workplan for Industrial Landfill Soil Vapor Extraction System.*
(14) ABC Engineering. 1995. *Industrial Landfill SVE Construction Complete Report.*
(15) ABC Engineering. 1995. *Long-term Surveillance and Preventative Maintenance Plan for Industrial Landfill Soil Vapor Extraction System.*
(16) ABC Engineering. 1999. *Revised Industrial Landfill SVE Design Document and As-Builts, and Performance Model.*
(17) Acme Environmental Services (AES), *Richardson Weapons Site 5-year Review Report, Operable Unit 2.* June 2000.
(18) Data R Us, Inc. Annual Soil Vapor Extraction Monitoring Reports. 1995-2002. (Data contained in site database and site-wide GIS)
(19) AES. 1995. *Supplemental Groundwater Investigation Workplan for Industrial Landfill Plume.*
(20) AES. 2000. *Supplemental Groundwater Investigation Report for Industrial Landfill Plume.*
(21) AES. 1996-2002. Annual Groundwater Monitoring Reports and Trend Analyses for OU2 Landfill Plume.
(22) AES. 2002. *Richardson Weapons Site Industrial Landfill Plume Proposed Plan and Comment Response Summary.*
(23) U.S. Department of Energy, Richardson Weapons Site, Environmental and Engineering Division. 2002. *Richardson Weapons Site Industrial Landfill Plume Record of Decision*
(24) AES. 2002. *Long-term Operation and Maintenance Plan for Industrial Landfill Plume Monitored Natural Attenuation Well system.*
(25) U.S. Department of Energy. 2003. *Remedial Process Optimization Report for Industrial Landfill Plume Monitoring System Findings and Recommendations.*
(26) U.S. Department of Energy. 1998. *Richardson Weapons Site Land Use Control Management and Maintenance Plan.*
(27) U.S. Department of Energy. 2002. *Industrial Landfill and Associated Groundwater Plume Use and Access Restrictions.*
(28) Project Performance Corporation. 2002. Industrial Landfill Uncertainty Analysis.
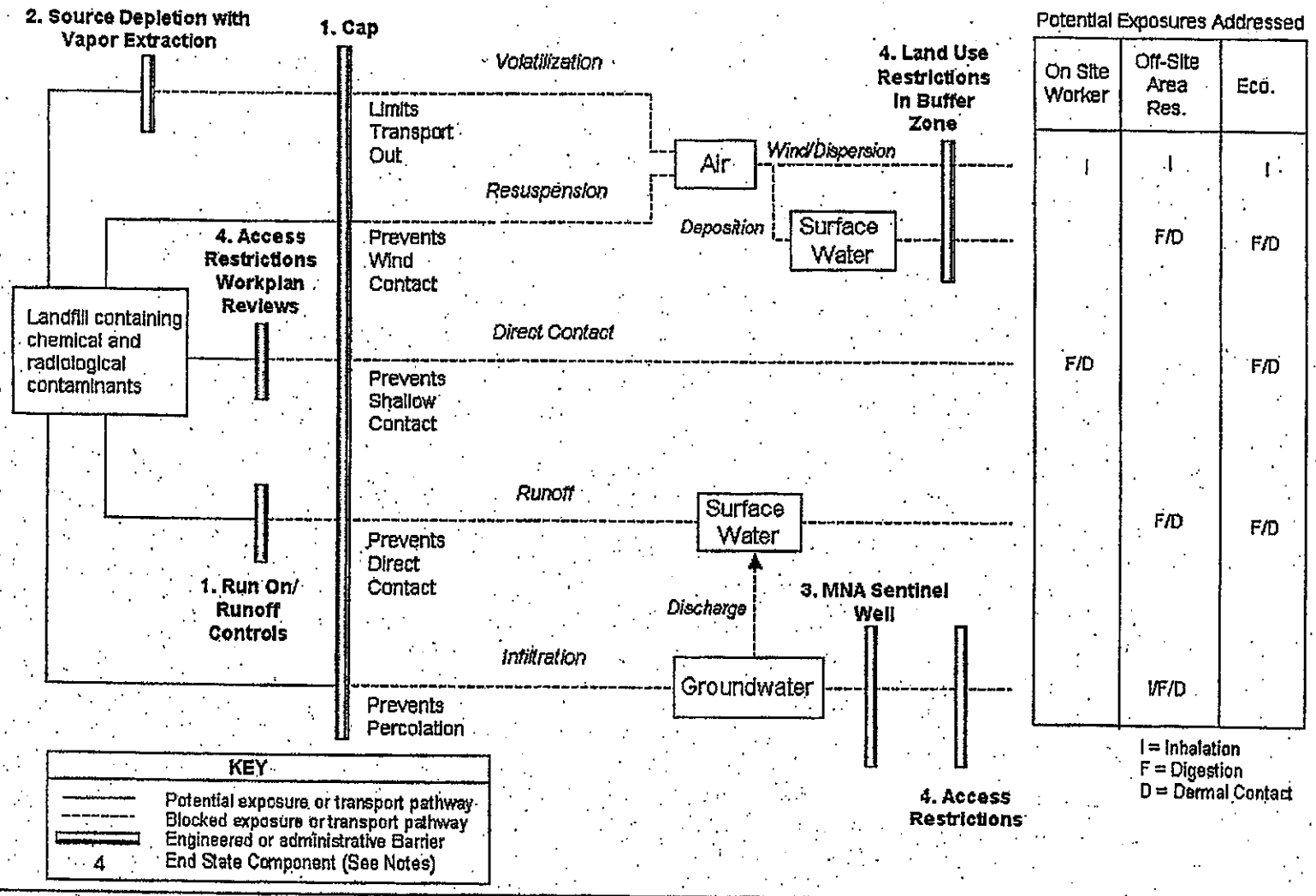
Highlight 2. Example of Post-Completion Conceptual Site Model