Design Change Package Cover Sheet (DCP)

DCP No.	Rev No.	Functional Classification	Project/Task No.	MT No.
M-DCP-Z-11003	1	PS	N/A	MT-SS-2010-00006

DCP Title
SILO Bin Aeration System and Slide Gate Valves Modifications

Facility	SS/SALTSTONE	Area	Z-AREA	Building	205000	System	BMH

Design Change Package Cover Sheet (DCP)

Classification Reviewer: N/A

Date: 06/10/2019

Design Change Package Cover Sheet (DCP)

DCP No.	Rev No.	Functional Classification	Project/Task No.	MT No.
M-DCP-Z-11003	1	PS	N/A	MT-SS-2010-00006

DCP Title
SILO Bin Aeration System and Slide Gate Valves Modifications

Facility	Area	Building	System
SS/SALTSTONE	Z-AREA	205000	BMH

Description

Rev 0: The (4) Silos will have the lower cone section removed and the fabric will be replaced (aeration pad). The (4) “air-slides”, which transport the dry feed material to the weigh hopper, will also have the fabric replaced. The aeration system will be modified to allow better monitoring and more control of the air flow to the Silos. New slide gate valves will replace the second butterfly valve – downstream of the air-slides. Flexible couplings between the slide gate valves and weigh hopper and weigh hopper and air blenders will be replaced.

Rev 1: Revised the DCP to update the design in support of the equipment procured and to remove the "Holds" placed on the Rev 0 design.

Prepared By (Responsible Engineer)	Date	DATR/USQ/TRP No. TRP-SS-2019-00165	Date
STASIE, GARY A.	05/23/2019	Approved By (Design Authority) KUCAB, DANIELLE E.	05/30/2019
Concurrence By (CQF(s))	**Date**	**Approved By (FOSC Chairman)**	**Date**
N/A	05/28/2019	N/A	05/30/2019
N/A	05/28/2019	**Approved By (Responsible Engineer Manager)** PATEL, ACHYUTBHAI V.	**Date** 06/10/2019

Additional Approvals (Optional)	Dept/Function	Date
SCHILLING, CHRISTOPHER A.	Design	05/23/2019
HEVEL, STEPHEN D.	Design	05/23/2019
OLORUNNIWO, AJIBOLA	Structural Mech	05/23/2019
NORRIS, JUSTIN W.	Construction	05/28/2019
CAUGHMAN, CRAIG A.	Design	05/23/2019
CLARK, STEPHEN H.	Design	05/23/2019
FORTY, RANDALL W.	Design	05/28/2019

Design Change Package Continuation Sheet

DCP No.	Sheet Revision	
M-DCP-Z-11003	1	Sheet 1 of 1

Note	Description	e
	Notes are for information and construction aids only	
	Mechanical Notes:	
1	Fabrication, installation and testing of piping shall be in accordance with ASME B31.3, WSRC-TM-95-1 Engineering Standard 15060 and Engineering Guide 15060-G. Piping Specifications per T-ESR-S-00010, P Code DWPF P0004.	
2	The flexible connector between the Air Slides and the Weigh Hopper and the three flexible connectors from the weigh hopper to the air blenders will be replaced under this DCP. Flexible connectors shall be procured using data sheet M-DS-Z-00067.	
	Electrical / I&C Notes:	
1	All Electrical Commodities shall be supported using standard commercial practices and WSRC-IM-95-58 Engineering Guide 03252-G (Anchor Bolts) as guides.	
2	All electrical work shall be performed and inspected using the latest revisions of the following: a) WSRC-IM-95-58 Guide, 16051-G, Installation of Electrical Raceway Systems & Cable Trays. b) WSRC-IM-95-58 Guide, 16052-G, Installation of Electrical Wires, Cables & Terminations. c) WSRC-IM-95-58 Guide, 16053-G, Installation of Electrical Equipment. d) WSRC-IM-95-58 Guide, 16056-G, Installation of Grounding Systems	
3	All electrical material shown on material list in this DCP are to be considered "or Equal" unless otherwise noted.	
4	Local control panel Z-205000-BMH-PNL-1000 is located in the silo area shown on drawing W774283.	
5	Field to locate instrument loop 1231 components in existing cabinet Z-205008-BMH-CAB-1. These panels and instruments are shown on J-J8-Z-00032. Add terminals and DIN rail for instrument installation as needed.	
	C/S/A Notes:	
1	Installation of Piping Supports using Cookbook C-CH-G-00004 shall be limited to types PS-S1, PS-S5 and PS-S6, between Elevations of 324'-0" and 344-0". Installation of Conduit Supports using Cookbook C-CI-G-0039 shall be limited to types S-1 thru S-9 and B-3 to B-4, between Elevations of 321’-0” and 344’-0”.	
2	Per structural mechanical evaluation (refer to Attachment 1 of M-DCP-Z-11003) horizontal support loads, using the cookbook method, shall be increased 10% to accommodate higher wind loads.	

Design Change Package Revision Summary Sheet

DCP No.	Sheet Revision	
M-DCP-Z-11003	1	Sheet 1 of 3

Rev No.	Description	Date
0	Initial issue.	9-10-12
1	Revised the DCP to update the design in support of the equipment procured and to remove the "Holds" placed on the Rev 0 design. **<u>Added to the DCP:</u>** **DCNs:** M-DCP-Z-11003 J-00018 M-DCP-Z-11003 J-00019 **Interim Drawings:** J-JZ-Z-00308 J-JZ-Z-00309 J-JZ-Z-00310 J-JZ-Z-00311 **Documents:** ALARA Design Review Form Structural Mechanics – Evaluation of Piping with Respect to C-CH-G-00004 (Attachment 1) M-DCP-Z-11003 PSD **Reference Documents:** J-CLC-Z-00041 J-JD-Z-00235 J-JD-Z-00236 J-JD-Z-00237 J-JD-Z-00238 J-JD-Z-00333 J-JD-Z-00334 J-JD-Z-00335 J-JD-Z-00336 J-JD-Z-00337 J-JD-Z-00338 J-JD-Z-00339 J-JD-Z-00340 J-JD-Z-00341 J-JD-Z-00342 J-JD-Z-00343 J-JD-Z-00344 J-JD-Z-00345 J-JD-Z-00346 J-JD-Z-00347 J-JD-Z-00348 J-JD-Z-00349 J-JD-Z-00350 J-JD-Z-00351 J-JD-Z-00352 J-JD-Z-00353	6-10-2019

Design Change Package Revision Summary Sheet

J-JD-Z-00354
J-JD-Z-00356
J-JD-Z-00357
J-JD-Z-00358
J-JD-Z-00359
J-JD-Z-00360

Revised Documents in the DCP:

Calculations:

M-DCP-Z-11003-CLC-T2-M1

DCNs:

M-DCP-Z-11003 E-00001
M-DCP-Z-11003 E-00003
M-DCP-Z-11003 J-00001
M-DCP-Z-11003 J-00002
M-DCP-Z-11003 J-00004
M-DCP-Z-11003 J-00005
M-DCP-Z-11003 J-00007
M-DCP-Z-11003 J-00008
M-DCP-Z-11003 J-00009
M-DCP-Z-11003 J-00010
M-DCP-Z-11003 J-00011
M-DCP-Z-11003 J-00014
M-DCP-Z-11003 J-00016
M-DCP-Z-11003 P-00001
M-DCP-Z-11003 P-00002
M-DCP-Z-11003 P-00003
M-DCP-Z-11003 P-00004
M-DCP-Z-11003 P-00005
M-DCP-Z-11003 P-00006
M-DCP-Z-11003 M-00001
M-DCP-Z-11003 M-00002
M-DCP-Z-11003 M-00003
M-DCP-Z-11003 M-00004

Interim Drawings:

C-CP-Z-00029
J-JQ-Z-00037
J-J8-Z-00032

Documents:

DCP Cover Sheet
DCP Continuation Sheet
DCP Revision Summary Sheet
DCP Document List
DCP Material Sheet
DCP PDMS Card Status Report

Design Change Package Revision Summary Sheet

<u>Documents No Longer Used in the DCP:</u>

Calculations:

M-DCP-Z-11003 CLC-M-0001
M-DCP-Z-11003 CLC-J1

Documents:

M-DS-Z-00062
M-DS-Z-00067
M-DS-Z-00069
M-RVD-Z-00062
M-SOW-Z-00006
M-DCP-Z-11003 SDACS

<u>Documents Voided in the DCP:</u>

J-JD-Z-00239
J-JD-Z-00240
J-JD-Z-00241
J-JD-Z-00242
J-JD-Z-00243
J-JD-Z-00244
J-JD-Z-00246
J-JD-Z-00247
J-JD-Z-00248
J-JD-Z-00249
J-JD-Z-00250

Design Change Package Documentation List

DCP No./Rev
M-DCP-Z-11003 / Rev 1

Documents Associated with Change								
Complete Document No. (If Vendor-Incl Sub + AC)	Rev.	Affected Document No.	Rev	Title	In DCP (Yes/No)	Remarks	Closure Action (If None, enter N/A)	Changed in this DCP Rev.(Y/N)
M-DCP-Z-11003	1	N/A	N/A	DCP COVER SHEET	YES	N/A	N/A	YES
M-DCP-Z-11003	1	N/A	N/A	DCP COVER CONTINUATION SHEET	YES	N/A	N/A	YES
M-DCP-Z-11003	1	N/A	N/A	DCP REVISION SUMMARY SHEET	YES	N/A	N/A	YES
M-DCP-Z-11003	1	N/A	N/A	DCP DOCUMENT LIST	YES	N/A	N/A	YES
M-DCP-Z-11003	1	N/A	N/A	DCP MATERIAL SHEET	YES	N/A	N/A	YES
M-DCP-Z-11003	1	N/A	N/A	ALARA DESIGN REVIEW FORM	YES	N/A	N/A	YES
MT-SS-2010-00006	0	N/A	N/A	ELAWD SILO AREA MODIFICATIONS	NO	REFERENCE	N/A	NO
M-DCP-Z-11003 ATTACHMENT 1	0	N/A	N/A	STRUCTURAL MECHANICS – EVALUATION OF PIPING WITH RESPECT TO C-CH-G-00004	YES	N/A	N/A	YES
M-DCP-Z-11003	1	PDMS	N/A	PDMS CARD STATUS REPORT	YES	SUP	N/A	YES
M-DCP-Z-11003	0	SDACS	N/A	SECONDARY DESIGN AGENCY COVER SHEET (SDACS)	NO	NOT REQUIRED	N/A	NO
M-DCP-Z-11003 PSD	0	N/A	N/A	SILO BIN AERATION SYSTEM AND SLIDE GATE VALVES MODIFICATION	YES	SUP	N/A	YES
M-DCP-Z-11003-CLC-T2-M1	1	N/A	N/A	LINE SIZE VERIFICATION FOR AERATION LINES (TYPE 2 CALCULATION)	YES	N/A	N/A	YES
M-DCP-Z-11003-CLC-M-0001	0	N/A	N/A	EVALUATION OF DRY FEED SILOS – FOR INSTALLATION OF AIR CANNONS (TYPE 2 CALCULATION)	NO	NOT REQUIRED	N/A	NO
M-DCP-Z-11003-CLC-J1	A	N/A	N/A	FOUNDATION FIELDBUS DESIGN (TYPE 2 CALCULATION)	NO	NOT REQUIRED	N/A	NO
J-CLC-Z-00041	0	N/A	N/A	FOUNDATION FIELDBUS DESIGN CALCULATION TYPE 1 CALCULATION	NO	REFERENCE	N/A	YES
ELECTRICAL								
M-DCP-Z-11003-E-00001	1	W774028	9	BULK MATERIAL STORAGE SCHEMATIC DIAGRAM – PREMIX BLENDING & CONVEYING SYSTEM ELECTRICAL	YES	SUP	Incorporate per G-ESR-S-00017. Latest revision	YES
M-DCP-Z-11003-E-00002	0	W774053	14	SALSTONE PROCESSING BLDG. 120VAC PANEL AND FUSE SCHEDULES PANEL Y168 & TBC1004	YES	SUP	Incorporate per G-ESR-S-00017. Latest revision	NO
M-DCP-Z-11003-E-00003	1	W774283	7	BULK MATERIAL HANDLING UNLOADING AREA STORAGE SILO EXPOSED RACEWAY PLAN	YES	ES	Incorporate per G-ESR-S-00017. Latest revision	YES
I&C								
M-DCP-Z-11003-J-00001	1	AC52406A-6	DE1	CONTROL PANEL LAYOUT LEFT DOOR LAYOUT	YES	SUP	Incorporate per G-	YES

Design Change Package Documentation List

DCP No./Rev
M-DCP-Z-11003 / Rev 1

Documents Associated with Change								
Complete Document No. (If Vendor-Incl Sub + AC)	Rev.	Affected Document No.	Rev	Title	In DCP (Yes/No)	Remarks	Closure Action (If None, enter N/A)	Changed in this DCP Rev.(Y/N)
							ESR-S-00017. Latest revision	
M-DCP-Z-11003-J-00002	1	AC52406A-9	DE1	SUBPANEL LAYOUT	YES	SUP	Incorporate per G-ESR-S-00017. Latest revision	YES
M-DCP-Z-11003-J-00003	0	AC52406A-10	A	BILL OF MATERIALS	YES	SUP	Incorporate per G-ESR-S-00010, Latest Revision	NO
M-DCP-Z-11003-J-00004	1	J-L6-Z-0001	3	SALTSTONE FACILITY DELTA V CONTROL SYSTEMS ARCHITECTURE	YES	SUP	Incorporate per G-ESR-S-00017. Latest revision	YES
M-DCP-Z-11003-J-00005	1	J-DS-Z-00037	5	CABINETS 1,2,3,4A AND 4B INPUT/OUTPUT DATABASE	YES	SUP	Incorporate per G-ESR-S-00017. Latest revision	YES
M-DCP-Z-11003-J-00006	N/A	N/A	N/A	NOT USED	N/A	N/A	N/A	N/A
M-DCP-Z-11003-J-00007	1	AC52406A-8	DE1	TERMINAL STRIP LAYOUT	YES	SUP	Incorporate per G-ESR-S-00017. Latest revision	YES
M-DCP-Z-11003-J-00008	1	AC52406A-15	DE1	CONTROLLER 03 CARD 02, I/O WIRING – DCS OUTPUTS	YES	SUP	Incorporate per G-ESR-S-00017. Latest revision	YES
M-DCP-Z-11003-J-00009	1	AC52406A-17	DE1	CONTROLLER 03 CARD 04, I/O WIRING – DCS OUTPUTS	YES	SUP	Incorporate per G-ESR-S-00017. Latest revision	YES
M-DCP-Z-11003-J-00010	1	AC52406A-38	DE2	CONTROLLER 03 CARD 25, I/O WIRING – DCS OUTPUTS	YES	SUP	Incorporate per G-ESR-S-00017. Latest revision	YES
M-DCP-Z-11003-J-00011	1	AC52406A-40	DE3	FIELD WIRING AND PIPING DIAGRAM	YES	SUP	Incorporate per G-ESR-S-00017. Latest revision	YES
M-DCP-Z-11003-J-00012	0	AC52406A-27	A	CONTROLLER 03 CARD 14, I/O WIRING - DCS OUTPUTS	YES	SUP	Incorporate per G-ESR-S-00010, Latest Revision	NO
M-DCP-Z-11003-J-00013	0	AC52406A-35	A	CONTROLLER 03 CARD 22, I/O WIRING - DCS OUTPUTS	Y	SUP	Incorporate per G-ESR-S-00010, Latest Revision	NO
M-DCP-Z-11003-J-00014	1	AC52406A-12	DE1	CONTROLLER WIRING	YES	SUP	Incorporate per G-ESR-S-00017. Latest revision	YES
M-DCP-Z-11003-J-00015	N/A	N/A	N/A	NOT USED	N/A	NOT USED	N/A	N/A
M-DCP-Z-11003-J-00016	1	D193700	6	200Z AREA DWPF-SALTSTONE ICR: LE-1226, LE-1228, & LE-1229 INSTRUMENT LOOP DIAGRAM E&I CONTROL SYSTEMS	YES	SUP	Incorporate per G-ESR-S-00017. Latest revision	YES

Design Change Package Documentation List

DCP No./Rev
M-DCP-Z-11003 / Rev 1

Documents Associated with Change								
Complete Document No. (If Vendor-Incl Sub + AC)	Rev.	Affected Document No.	Rev	Title	In DCP (Yes/No)	Remarks	Closure Action (If None, enter N/A)	Changed in this DCP Rev.(Y/N)
M-DCP-Z-11003-J-00017	0	J-JQ-Z-0002	3	SALTSTONE FACILITY DELTA V CONTROL SYSTEM I/O CABINET #2 CONNECTION DIAGRAM	YES	SUP	Incorporate per G-ESR-S-00017. Latest revision	NO
M-DCP-Z-11003-J-00018	0	Z205-ZZZL-1231	1	SALTSTONE INSTRUMENT SCALING AND SETPOINT DOCUMENT Z205-ZZZL-1231 SILO 3 LEVEL	YES	SUP	Incorporate per G-ESR-S-00017. Latest revision	YES
M-DCP-Z-11003-J-00019	0	AC47575A-1	A	250 DISPLAY PANEL LAYOUT AND FABRICATION AND 250 DISPLAY PANEL WIRING DIAGRAMS	YES	GEN	Incorporate per G-ESR-S-00017. Latest revision	YES
J-JD-Z-00235	2	N/A	N/A	SALTSTONE KNIFE GATE VALVE WCV-1282	NO	REFERENCE	N/A	YES
J-JD-Z-00236	2	N/A	N/A	SALTSTONE KNIFE GATE VALVE WCV-1283	NO	REFERENCE	N/A	YES
J-JD-Z-00237	2	N/A	N/A	SALTSTONE KNIFE GATE VALVE WCV-1284	NO	REFERENCE	N/A	YES
J-JD-Z-00238	2	N/A	N/A	SALTSTONE KNIFE GATE VALVE WCV-1285	NO	REFERENCE	N/A	YES
J-JD-Z-00239	B	N/A	N/A	N/A	N/A	VOIDED	N/A	N/A
J-JD-Z-00240	B	N/A	N/A	N/A	N/A	VOIDED	N/A	N/A
J-JD-Z-00241	B	N/A	N/A	N/A	N/A	VOIDED	N/A	N/A
J-JD-Z-00242	B	N/A	N/A	N/A	N/A	VOIDED	N/A	N/A
J-JD-Z-00243	B	N/A	N/A	N/A	N/A	VOIDED	N/A	N/A
J-JD-Z-00244	B	N/A	N/A	N/A	N/A	VOIDED	N/A	N/A
J-JD-Z-00246	B	N/A	N/A	N/A	N/A	VOIDED	N/A	N/A
J-JD-Z-00247	B	N/A	N/A	N/A	N/A	VOIDED	N/A	N/A
J-JD-Z-00248	B	N/A	N/A	N/A	N/A	VOIDED	N/A	N/A
J-JD-Z-00249	B	N/A	N/A	N/A	N/A	VOIDED	N/A	N/A
J-JD-Z-00250	B	N/A	N/A	N/A	N/A	VOIDED	N/A	N/A

Design Change Package Documentation List

DCP No./Rev
M-DCP-Z-11003 / Rev 1

Documents Associated with Change								
Complete Document No. (If Vendor-Incl Sub + AC)	Rev.	Affected Document No.	Rev	Title	In DCP (Yes/No)	Remarks	Closure Action (If None, enter N/A)	Changed in this DCP Rev.(Y/N)
J-JD-Z-00333	A	N/A	N/A	ROTAMETERS FI-1013, 1020, 2013 & 2020	NO	REFERENCE	N/A	N/A
J-JD-Z-00334	A	N/A	N/A	ROTAMETERS FI-3013, 3020, 4013 & 4020	NO	REFERENCE	N/A	N/A
J-JD-Z-00335	A	N/A	N/A	PRESSURE CONTROL VALVE PCV-1011, 2011, 3011, & 4011	NO	REFERENCE	N/A	N/A
J-JD-Z-00336	A	N/A	N/A	PRESSURE CONTROL VALVE PCV-1018, 2018, 3018, & 4018	NO	REFERENCE	N/A	N/A
J-JD-Z-00337	A	N/A	N/A	PRESSURE CONTROL VALVE PCV-1009, 2009, 3009, & 4009	NO	REFERENCE	N/A	N/A
J-JD-Z-00338	A	N/A	N/A	PRESSURE CONTROL VALVE PCV-1016, 2016, 3016, & 4016	NO	REFERENCE	N/A	N/A
J-JD-Z-00339	A	N/A	N/A	PRESSURE GAUGES PI-1008, 1010, & 1012	NO	REFERENCE	N/A	N/A
J-JD-Z-00340	A	N/A	N/A	PRESSURE GAUGES PI-2008, 2010, & 2012	NO	REFERENCE	N/A	N/A
J-JD-Z-00341	A	N/A	N/A	PRESSURE GAUGES PI-3008, 3010, & 3012	NO	REFERENCE	N/A	N/A
J-JD-Z-00342	A	N/A	N/A	PRESSURE GAUGES PI-4008, 4010, & 4012	NO	REFERENCE	N/A	N/A
J-JD-Z-00343	A	N/A	N/A	PRESSURE GAUGES PI-1015, 1017, & 1019	NO	REFERENCE	N/A	N/A
J-JD-Z-00344	A	N/A	N/A	PRESSURE GAUGES PI-2015, 2017, & 2019	NO	REFERENCE	N/A	N/A
J-JD-Z-00345	A	N/A	N/A	PRESSURE GAUGES PI-3015, 3017, & 3019	NO	REFERENCE	N/A	N/A
J-JD-Z-00346	A	N/A	N/A	PRESSURE GAUGES PI-4015, 4017, & 4019	NO	REFERENCE	N/A	N/A
J-JD-Z-00347	A	N/A	N/A	FLOW CONTROL VALVES FCV-1007, 2007, 3007, 4007	NO	REFERENCE	N/A	N/A
J-JD-Z-00348	A	N/A	N/A	FLOW CONTROL VALVES FCV-1014, 2014, 3014, 4014	NO	REFERENCE	N/A	N/A
J-JD-Z-00349	A	N/A	N/A	ROTAMETERS FI-1006A, 1006B, 1006C & 1006D	NO	REFERENCE	N/A	N/A
J-JD-Z-00350	A	N/A	N/A	ROTAMETERS FI-2006A, 2006B, 2006C & 2006D	NO	REFERENCE	N/A	N/A
J-JD-Z-00351	A	N/A	N/A	ROTAMETERS FI-3006A, 3006B, 3006C & 3006D	NO	REFERENCE	N/A	N/A
J-JD-Z-00352	A	N/A	N/A	ROTAMETERS FI-4006A, 4006B, 4006C & 4006D	NO	REFERENCE	N/A	N/A

Design Change Package Documentation List

DCP No./Rev
M-DCP-Z-11003 / Rev 1

Documents Associated with Change								
Complete Document No. (If Vendor-Incl Sub + AC)	Rev.	Affected Document No.	Rev	Title	In DCP (Yes/No)	Remarks	Closure Action (If None, enter N/A)	Changed in this DCP Rev.(Y/N)
J-JD-Z-00353	A	N/A	N/A	PRESSURE CONTROL VALVE PCV-1004, 2004, 3004, & 4004	NO	REFERENCE	N/A	N/A
J-JD-Z-00354	A	N/A	N/A	PRESSURE CONTROL VALVE PCV-1002, 2002, 3002, & 4002	NO	REFERENCE	N/A	N/A
J-JD-Z-00356	A	N/A	N/A	PRESSURE GAUGES PI-1001, 1003, & 1005	NO	REFERENCE	N/A	N/A
J-JD-Z-00357	A	N/A	N/A	PRESSURE GAUGES PI-2001, 2003, & 2005	NO	REFERENCE	N/A	N/A
J-JD-Z-00358	A	N/A	N/A	PRESSURE GAUGES PI-3001, 3003, & 3005	NO	REFERENCE	N/A	N/A
J-JD-Z-00359	A	N/A	N/A	PRESSURE GAUGES PI-4001, 4003, & 4005	NO	REFERENCE	N/A	N/A
J-JD-Z-00360	A	N/A	N/A	VALVE POSITION INDICATOR	NO	REFERENCE	N/A	N/A
J-JQ-Z-00037	B	N/A	N/A	LOS-302 I/O WIRING-DCS OUTPUTS FOR WI-1282, 1283, 1284, AND 1285	YES	INTERIM DRAWING	Incorporate per G-ESR-S-00017. Latest revision	YES
J-J8-Z-00032	B	N/A	N/A	SALTSTONE PROCESSING FACILITY WCV-1282, 1283, 1284, AND 1285 SEGMENT DRAWING INSTRUMRNT AND CONTROLS	YES	INTERIM DRAWING	Incorporate per G-ESR-S-00017. Latest revision	YES
J-JZ-Z-00308	A	N/A	N/A	SILO #4 FLOW CONTROL DISCHARGE VALVE POSITION WCV-1282 Z205-ZZZZ-1282	YES	INTERIM DRAWING	Incorporate per G-ESR-S-00017. Latest revision	YES
J-JZ-Z-00309	A	N/A	N/A	SILO #1 FLOW CONTROL DISCHARGE VALVE POSITION WCV-1283 Z205-ZZZZ-1283	YES	INTERIM DRAWING	Incorporate per G-ESR-S-00017. Latest revision	YES
J-JZ-Z-00310	A	N/A	N/A	SILO #2 FLOW CONTROL DISCHARGE VALVE POSITION WCV-1284 Z205-ZZZZ-1284	YES	INTERIM DRAWING	Incorporate per G-ESR-S-00017. Latest revision	YES
J-JZ-Z-00311	A	N/A	N/A	SILO #3 FLOW CONTROL DISCHARGE VALVE POSITION WCV-1285 Z205-ZZZZ-1285	YES	INTERIM DRAWING	Incorporate per G-ESR-S-00017. Latest revision	YES
PLANT DESIGN								
M-DCP-Z-11003-P-00001	1	MH21142-1-41	B4	SYSTEM INSTALLATION DETAILS	YES	GEN	Incorporate per G-ESR-S-00017. Latest revision	YES
M-DCP-Z-11003-P-00002	1	MH21142-1-46	DE2	GENERAL ARRANGEMENT COMPRESSED AIR EQUIPMENT	YES	GEN	Incorporate per G-ESR-S-00017. Latest revision	YES

Design Change Package Documentation List

DCP No./Rev
M-DCP-Z-11003 / Rev 1

Documents Associated with Change								
Complete Document No. (If Vendor-Incl Sub + AC)	Rev.	Affected Document No.	Rev	Title	In DCP (Yes/No)	Remarks	Closure Action (If None, enter N/A)	Changed in this DCP Rev.(Y/N)
M-DCP-Z-11003-P-00003	1	W775922	5	CEMENT / FLY ASH SILO'S – SECTIONS A & B GENERAL ARRANGEMENTS / EQUIPMENT LOCATION	YES	GEN	Incorporate per G-ESR-S-00017. Latest revision	YES
M-DCP-Z-11003-P-00004	1	W775926	5	CEMENT / FLY ASH STORAGE SILO'S – SECTION B GENERAL ARRANGEMENTS / EQUIPMENT LOCATION	YES	GEN	Incorporate per G-ESR-S-00017. Latest revision	YES
M-DCP-Z-11003-P-00005	1	W779822	4	BULK MATERIAL HANDLING AREA – Z205 PLAN – PIPING LAYOUT	YES	GEN	Incorporate per G-ESR-S-00017. Latest revision	YES
M-DCP-Z-11003-P-00006	1	W779821	5	BULK MATERIAL HANDLING AREA – Z205 PLAN – PIPING LAYOUT	YES	GEN	Incorporate per G-ESR-S-00017. Latest revision	YES
MECHANICAL								
M-DCP-Z-11003-M-00001	1	W754522	30	SALTSTONE CEMENT AND FLYASH STORAGE SILO PIPING AND INSTRUMENTATION DIAGRAM PROCESS / INSTR MECH / CONT SYS	YES	ESS	Incorporate per G-ESR-S-00017. Latest revision	YES
M-DCP-Z-11003-M-00002	1	W754524	16	PREMIX BLENDING AND CONVEYING SYSTEM – PIPING AND INSTRUMENTATION DIAGRAM	YES	ESS	Incorporate per G-ESR-S-00017. Latest revision	YES
M-DCP-Z-11003-M-00003	1	W754642	36	PLANT AND INSTRUMENT AIR PIPING AND INSTRUMENTATION DIAGRAM	YES	ESS	Incorporate per G-ESR-S-00017. Latest revision	YES
M-DCP-Z-11003-M-00004	1	M-M6-Z-0044	16	PREMIX BLENDING AND CONVEYING SYSTEM PIPING AND INSTRUMENTATION DIAGRAM	YES	ESS	Incorporate per G-ESR-S-00017. Latest revision	YES
M-ML-Z-00010	0	N/A	N/A	PIPING DATA SHEET PACKAGE – ELAWD SILO AREA MODIFICATION	NO	SUP	For reference only	YES
M-DS-Z-00062	0	N/A	N/A	SILO'S 1,2 AND 3 VENT DUST COLLECTOR	NO	NOT REQUIRED	For reference only	NO
M-DS-Z-00067	0	N/A	N/A	FLEXIBLE CONNECTORS FOR THE DRY FEED SYSTEM	NO	NOT REQUIRED	For reference only	NO
M-DS-Z-00069	0	N/A	N/A	AIR CANNONS FOR THE DRY FEED SILOS	NO	NOT REQUIRED	For reference only	NO
M-DS-Z-00070	0	N/A	N/A	REFURBISHMENT MATERIAL FOR THE DRY FEED SILOS – BIN DISCHARGE CONES	NO	ISSUED DATA SHEET	For reference only	NO
M-RVD-Z-00062	1	N/A	N/A	PRESSURE / VACUUM RELIEF DEVICE FOR THE	NO	NOT REQUIRED	For reference only	NO

Design Change Package Documentation List

DCP No./Rev
M-DCP-Z-11003 / Rev 1

Documents Associated with Change								
Complete Document No. (If Vendor-Incl Sub + AC)	Rev.	Affected Document No.	Rev	Title	In DCP (Yes/No)	Remarks	Closure Action (If None, enter N/A)	Changed in this DCP Rev.(Y/N)
				DRY FEED SILOS 1,2 AND3				
M-SOW-Z-00006	0	N/A	N/A	SALTSTONE SILO FLOW AND CONTROL UPGRADE	NO	NOT REQUIRED	For reference only	NO
CSA								
C-CLC-Z-00082	1	N/A	N/A	ELAWD SILO BIN AERATION SYSTEM AND SLIDE GATE VALVES MODIFICATION	NO	ISSUED CALC	For reference only	YES
C-CP-Z-00029	B	N/A	N/A	SILO AND PREMIX BLENDING EQUIPMENT SUPPORT STRUCTURE PIPE SUPPORT FRAMING PLANS SECTIONS AND DETAILS	YES	INTERIM DRAWING	Incorporate per G-ESR-S-00017. Latest revision	YES

Design Materials Sheet

Document Number M-DCP-Z-11003 Revision 1 Engineering Discipline Mechanical

Description and Material Type	Unit of Meas.	Size	Qty	Procurement Responsibility	Functional Class	Procurement Level	Spec. / Datasheet / QIP / CGD	RICP No.	Stores Caption Item/Purchase Req.	
									Number	Comments
KNIFE GATE VALVES	Each	12”	4	Design Services	PS	2	J-JD-Z-00235, 00236, 00237, and 00238	467	N/A	Purchase Order SRRA 135296
ROTAMETERS	Each	~	24	Design Services	PS	2	J-JD-Z-00333, 00334, 00349, 00350, 00351, and 00352	9818-0	N/A	MSR 000103865M REQ #: 000147262R
PRESSURE GAUGES	Each	~	36	Design Services	PS	2	J-JD-Z-00339, 00340, 00341, 00342, 00343, 00344, 00345, 00346, 00356, 00357, 00358, and 00359	9818-0	N/A	MSR 000103920M REQ #: 000147667R
PRESSURE REGULATORS	Each	~	24	Design Services	PS	2	J-JD-Z-00335, 00336, 00337, 00338, 00339, 00353, 00354	9818-0	N/A	MSR 000103965M REQ #: 000147267R
PANEL MOUNTED POSITION INDICATORS	Each	~	4	Design Services	PS	2	J-JD-Z-00360	N/A	N/A	LATER

Design Materials Sheet

Document Number M-DCP-Z-11003 Revision 1 Engineering Discipline Mechanical

Description and Material Type	Unit of Meas.	Size	Qty	Procurement Responsibility	Functional Class	Procurement Level	Spec. / Datasheet / QIP / CGD	RICP No.	Stores Caption Item/Purchase Req.	
									Number	Comments
Connector, Flex 1000 Denier Cordura Plus Nylon 16” x 16” x 6¼” Nol-Tec Catalog No. 46047 (Replacement flexible couplings in the bulk material flow path (Ref. MH21142-1-41)	Each	See desc	2	Construction	PS	3	N/A	N/A	N/A	N/A
Connector, Flex 200 Denier Nylon, 14¼” x 16¼” x 6” x 3” x 3” Nol-Tec Catalog No. N/A (Replacement flexible couplings in the bulk material flow path (Ref. MH21142-1-41)	Each	See desc	1	Construction	PS	3	N/A	N/A	N/A	N/A
Connector, Flex 1000 Denier Cordura Plus Nylon, 13” x 14½” x 6” x 3” x 3” Nol-Tec Catalog No. N/A (Replacement flexible couplings in the bulk material flow path (Ref. MH21142-1-41)	Each	See desc	4	Construction	PS	3	N/A	N/A	N/A	N/A
Clamp, Quick Release, SS Nol-Tec Catalog No. 10151 (for the replacement flexible couplings)	Each	N/A	14	Construction	PS	3	N/A	N/A	N/A	N/A
FOUNDATION SEGMENT PROTECTOR, PEPPERL-FUCHS R2-SP-IC6, DIN RAIL MOUNT WITH TERMINATING RESISTOR 100 OHM	Each	1	1	P&CS	PS	2	N/A	N/A	N/A	N/A

Design Materials Sheet

Document Number M-DCP-Z-11003 Revision 1 Engineering Discipline Mechanical

Description and Material Type	Unit of Meas.	Size	Qty	Procurement Responsibility	Functional Class	Procurement Level	Spec. / Datasheet / QIP / CGD	RICP No.	Stores Caption Item/Purchase Req.	
									Number	Comments
POWER SUPPLY, 24 VDC, ACOPIAN MODEL NO. 24EB60 WITH EB35DIN MOUNT	Each	1	1	P&CS	PS	2	N/A	N/A	N/A	N/A
ROSEMOUNT 848T-F-15-S002 FOUNDATION FIELDBUS MULTIPOINT SENSORS - DIN RAIL MOUNT	Each	1	1	P&CS	PS	2	N/A	N/A	N/A	N/A

ALARA Design Review Form

MT or DCP/DCF Number M-DCP-Z-11003

Title SILO BIN AERATION SYSTEM AND SLIDE GATE VALVES MODIFICATIONS

Brief Description of the Scope

The (4) Silos will have the lower cone section removed and the fabric will be replaced (aeration pad). The (4) “air-slides”, which transport the dry feed material to the weigh hopper, will also have the fabric replaced. The aeration system will be modified to allow better monitoring and more control of the air flow to the Silos. New slide gate valves will replace the second butterfly valve – downstream of the air-slides. Flexible couplings between the slide gate valves and weigh hopper and weigh hopper and air blenders will be replaced.

Reference(s)
MT-SS-2010-00006

Answer the following ALARA screening questions. If the answer is **YES** to any of the questions, complete the appropriate Supplemental Design Checklist(s) (SDC). The SDCs can be accessed on the Design Engineering Web page under ‘Guidance Documents’, then ‘Checklists’.

RADIOLOGICAL QUESTIONS:	**YES**	**NO**
1. Does the design activity involve performance in, or require entry to, an area in an existing facility posted as a “Radiation Area” or greater, or a “Contamination Area” or greater, or an “Airborne Radiation Area”, or an area in a new facility which, following facility operation, will contain or process radioactive material? If yes, review attached Supplemental Design Checklist SDC-1.		X
2. Does the design activity involve any system that does, or will (following facility operation), contain, convey, or use radioactive materials? If yes, review attached Supplemental Design Checklist SDC-2.		X
3. Does the design activity involve changes to shielding requirements or the use of penetrations in shield walls? If yes, review attached Supplemental Design Checklist SDC-3.		X
4. Does the design activity involve new ventilation systems, modifications to existing ventilation systems, or the conversion of a clean area to a radiological area? If yes, review attached Supplemental Design Checklist SDC-4.		X
5. Does the design activity involve area (including Nuclear Incident Monitoring – NIM), airborne, process, or effluent radiation monitoring systems? If yes, review attached Supplemental Design Checklist SDC-5.		X

Comments

Responsible Engineer Gary Stasie Date Approvals Maintained in DCR/EDWS

Checker/Verifier Dave Massey Date Approvals Maintained in DCR/EDWS

Purpose/Scope

This evaluates the piping of M-DCP-Z-11003. This DCP modifies the bin aeration system and replaces motor operated butterfly valves with knife gate valves.

Evaluations

PIPING

The piping of the Bin Aeration System is PS101 (1, 1 ½, and 2 inch schedule 80 carbon steel). The piping meets the criteria of C-CH-G-00004 (Ref. 5) with the exception that the piping is exposed to wind at an elevation greater than 33 feet above ground level. The support spans from C-CH-G-00004(Ref. 5) are acceptable based on the following assessment.

The maximum piping elevation of 344 feet is 53 feet above the ground elevation of 291 feet. The maximum elevation approved in C-CH-G-00004 (Ref. 5) is 33 feet. From ASCE 7-2010 (Ref. 6) wind velocity pressure (q_z) is calculated using Eq. 29.3-1 - $q_z = 0.00256\ K_z K_{zt} K_d V^2$ (lb/ft^2). The elevation dependent variable of this equation is K_z. Interpolating Table 27.3-1 Exposure category C, K_z is 1.00 at 33 ft. and 1.1 at 53 ft. above ground level. Wind loading will therefore increase by 10%.

The 2' and smaller piping of C-CH-G-00004 (Ref. 5) includes both carbon steel and stainles steel piping. The basic allowable stress for A106 or A53 carbon steel is 20 ksi. The basic allowable stress for TP304L and TP316L stainless steel is 16.7 ksi. Therefore, the material allowable for the carbon steel piping of this modification is 19.8% greater than the minimum used in C-CH-G-00004(Ref. 5).

The 19.8% carbon steel piping stress capability is significantly greater than the 10% wind load increase from 33 ft. to 53 ft.

Knife Gate Valve

These valves are considered flow path only, not piping, per M-DCP-Z-11003-M-00002 Note 7. The knife gate valves replacing the existing motor operated butterfly valve has a longer operator (Figure 2) than the current configuration. Per C-CLC-Z-00082 (Ref. 7) a new support is being added to support the knife gate valve operators. Therefore, gravity loading is not increased. The configuration of the valve is that the valve is suspended above a hopper with a flex hose connection. (See Figure 1). Thermal and NPH loading are not impacted by this modification.

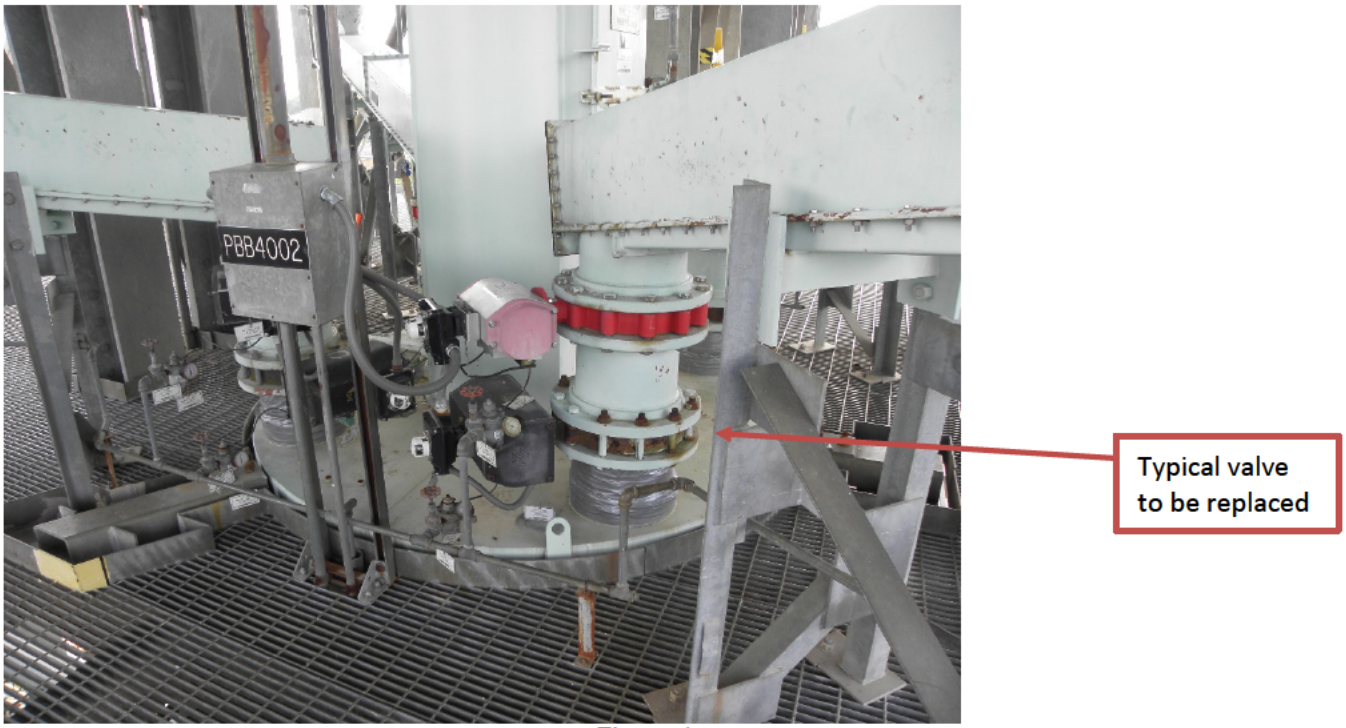

Figure 1

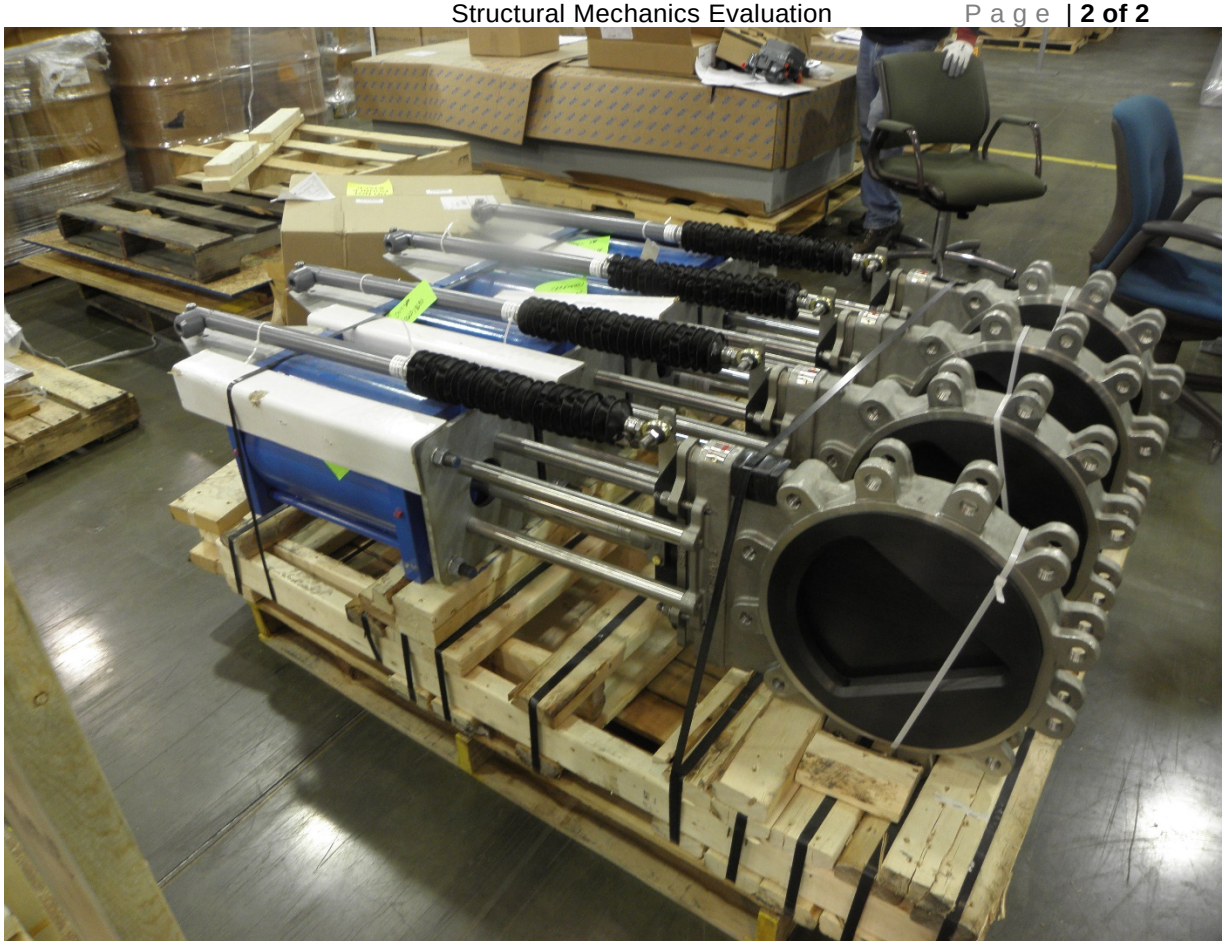

Figure 2

CONCLUSION

The piping of M-DCP-Z-11003 (Ref. 4) meets ASME B31.3 – 16 code stress allowable using the support span criteria of C-CH-G-00004 (Ref.5). Piping horizontal support loading shall be increased 10% to account for increased wind loading.

The knife gate valve is not part of piping. Therefore, ASME B31.3 (Ref. 2) Code pipe stress allowable does not apply. The addition of the support on the valve operator provides assurance that the valve operation is not impaired.

References

1. SRS Engineering Standards Manual WSRC-TM-95-1 (Standard No. 01060, Rev12, SRS Structural Design Criteria).
2. ASME B31.3- 2016 Edition, ASME Code for Process Piping.
3. SRS Engineering Practice Manuel WSRC- IM-95-58 (Guide No. 15060-G, Rev.8), Application of ASME B31.3.
4. M-DCP-Z-11003, R/0, SILO Bin Aeration System and Slide Gate Valves Modifications.
5. C-CH-G-00004, R/5, Routing and Supports for NPS 2 and Smaller Piping.
6. ASCE 7 – 2010, Minimum Design Loads for Buildings and Other Structures.
7. C-CLC-Z-00082, R/1, ELAWD Silo Bin Aeration System and Slide Gate Valve Modification.

Reviewed By:

Donald Stewart 3/18/2019

Donald Stewart

Checked By:

MJPatel 3/18/2019

Mahendra Patel

Installation Card Status Report

Drawing: M-DCP-Z-11003 Rev: 1

Unit	CT	ID	DCD	Card No	CT	Status	Work Order	WBS	Printed	Installed	Inspected
SS	CA	205E004FAA	M-DCP-Z-11003	10413777	CA	Card Deleted			09/06/2012		
				10413778	FM	Card Deleted			09/06/2012		
				10413779	TO	Card Deleted			09/06/2012		
			M-DCP-Z-11003/R1	10444099	CA	Printed			05/30/2019		
				10444100	FM	Printed			05/30/2019		
				10444101	TO	Printed			05/30/2019		
		205E004FAB	M-DCP-Z-11003	10413780	CA	Card Deleted			09/06/2012		
				10413781	FM	Card Deleted			09/06/2012		
				10413782	TO	Card Deleted			09/06/2012		
			M-DCP-Z-11003/R1	10444151	CA	Printed			05/30/2019		
				10444152	FM	Printed			05/30/2019		
				10444153	TO	Printed			05/30/2019		
		205E004FAC	M-DCP-Z-11003	10413783	CA	Card Deleted			09/06/2012		
				10413784	FM	Card Deleted			09/06/2012		
				10413785	TO	Card Deleted			09/06/2012		
			M-DCP-Z-11003/R1	10444141	CA	Printed			05/30/2019		
				10444142	FM	Printed			05/30/2019		
				10444143	TO	Printed			05/30/2019		
		205E004FAD	M-DCP-Z-11003	10413786	CA	Card Deleted			09/06/2012		
				10413787	FM	Card Deleted			09/06/2012		
				10413788	TO	Card Deleted			09/06/2012		
			M-DCP-Z-11003/R1	10444138	CA	Printed			05/30/2019		
				10444139	FM	Printed			05/30/2019		
				10444140	TO	Printed			05/30/2019		
		205E004FAE	M-DCP-Z-11003	10413789	CA	Card Deleted			09/06/2012		
				10413790	FM	Card Deleted			09/06/2012		
				10413791	TO	Card Deleted			09/06/2012		
			M-DCP-Z-11003/R1	10444135	CA	Printed			05/30/2019		
				10444136	FM	Printed			05/30/2019		
				10444137	TO	Printed			05/30/2019		
		205E004FAF	M-DCP-Z-11003	10413792	CA	Card Deleted			09/06/2012		
				10413793	FM	Card Deleted			09/06/2012		
				10413794	TO	Card Deleted			09/06/2012		
			M-DCP-Z-11003/R1	10444132	CA	Printed			05/30/2019		
				10444133	FM	Printed			05/30/2019		
				10444134	TO	Printed			05/30/2019		
		205E004FAG	M-DCP-Z-11003	10413795	CA	Card Deleted			09/06/2012		
				10413796	FM	Card Deleted			09/06/2012		
				10413797	TO	Card Deleted			09/06/2012		
			M-DCP-Z-11003/R1	10444121	CA	Printed			05/30/2019		
				10444122	FM	Printed			05/30/2019		

Installation Card Status Report

Drawing: M-DCP-Z-11003 Rev: 1

Unit	CT	ID	DCD	Card No	CT	Status	Work Order	WBS	Printed	Installed	Inspected
SS	CA	205E004FAG	M-DCP-Z-11003/R1	10444123	TO	Printed			05/30/2019		
		205E004FF	M-DCP-Z-11003/R1	10444089	CA	Printed			05/30/2019		
				10444090	FM	Printed			05/30/2019		
				10444091	TO	Printed			05/30/2019		
		205E004FG	M-DCP-Z-11003	10413671	CA	Card Deleted			09/06/2012		
				10413672	FM	Card Deleted			09/06/2012		
				10413673	TO	Card Deleted			09/06/2012		
			M-DCP-Z-11003/R1	10444092	CA	Printed			05/30/2019		
				10444093	FM	Printed			05/30/2019		
				10444094	TO	Printed			05/30/2019		
		205E004FH	M-DCP-Z-11003	10413674	CA	Card Deleted			09/06/2012		
				10413675	FM	Card Deleted			09/06/2012		
				10413676	TO	Card Deleted			09/06/2012		
			M-DCP-Z-11003/R1	10444095	CA	Printed			05/30/2019		
				10444096	FM	Printed			05/30/2019		
				10444097	TO	Printed			05/30/2019		
		205E004FJ	M-DCP-Z-11003	10413677	CA	Card Deleted			09/06/2012		
				10413678	FM	Card Deleted			09/06/2012		
				10413679	TO	Card Deleted			09/06/2012		
			M-DCP-Z-11003/R1	10444174	CA	Printed			05/30/2019		
				10444175	FM	Printed			05/30/2019		
				10444176	TO	Printed			05/30/2019		
		205E004FR	M-DCP-Z-11003	10413750	CA	Card Deleted			09/06/2012		
				10413751	FM	Card Deleted			09/06/2012		
				10413752	TO	Card Deleted			09/06/2012		
			M-DCP-Z-11003/R1	10444105	CA	Printed			05/30/2019		
				10444106	FM	Printed			05/30/2019		
				10444107	TO	Printed			05/30/2019		
		205E004FS	M-DCP-Z-11003	10413753	CA	Card Deleted			09/06/2012		
				10413754	FM	Card Deleted			09/06/2012		
				10413755	TO	Card Deleted			09/06/2012		
			M-DCP-Z-11003/R1	10444108	CA	Printed			05/30/2019		
				10444109	FM	Printed			05/30/2019		
				10444110	TO	Printed			05/30/2019		
		205E004FT	M-DCP-Z-11003	10413756	CA	Card Deleted			09/06/2012		
				10413757	FM	Card Deleted			09/06/2012		
				10413758	TO	Card Deleted			09/06/2012		
			M-DCP-Z-11003/R1	10444113	CA	Printed			05/30/2019		
				10444114	FM	Printed			05/30/2019		
				10444115	TO	Printed			05/30/2019		
		205E004FU	M-DCP-Z-11003	10413759	CA	Card Deleted			09/06/2012		

Installation Card Status Report

Drawing: M-DCP-Z-11003 Rev: 1

Unit	CT	ID	DCD	Card No	CT	Status	Work Order	WBS	Printed	Installed	Inspected
SS	CA	205E004FU	M-DCP-Z-11003	10413760	FM	Card Deleted			09/06/2012		
				10413761	TO	Card Deleted			09/06/2012		
			M-DCP-Z-11003/R1	10444118	CA	Printed			05/30/2019		
				10444119	FM	Printed			05/30/2019		
				10444120	TO	Printed			05/30/2019		
		205E004FV	M-DCP-Z-11003	10413762	CA	Card Deleted			09/06/2012		
				10413763	FM	Card Deleted			09/06/2012		
				10413764	TO	Card Deleted			09/06/2012		
			M-DCP-Z-11003/R1	10444170	CA	Printed			05/30/2019		
				10444171	FM	Printed			05/30/2019		
				10444172	TO	Printed			05/30/2019		
		205E004FW	M-DCP-Z-11003	10413765	CA	Card Deleted			09/06/2012		
				10413766	FM	Card Deleted			09/06/2012		
				10413767	TO	Card Deleted			09/06/2012		
			M-DCP-Z-11003/R1	10444167	CA	Printed			05/30/2019		
				10444168	FM	Printed			05/30/2019		
				10444169	TO	Printed			05/30/2019		
		205E004FX	M-DCP-Z-11003	10413768	CA	Card Deleted			09/06/2012		
				10413769	FM	Card Deleted			09/06/2012		
				10413770	TO	Card Deleted			09/06/2012		
			M-DCP-Z-11003/R1	10444157	CA	Printed			05/30/2019		
				10444158	FM	Printed			05/30/2019		
				10444159	TO	Printed			05/30/2019		
		205E004FY	M-DCP-Z-11003	10413771	CA	Card Deleted			09/06/2012		
				10413772	FM	Card Deleted			09/06/2012		
				10413773	TO	Card Deleted			09/06/2012		
			M-DCP-Z-11003/R1	10444581	CA	Printed			05/30/2019		
				10444582	FM	Printed			05/30/2019		
				10444583	TO	Printed			05/30/2019		
		205E004FZ	M-DCP-Z-11003	10413774	CA	Card Deleted			09/06/2012		
				10413775	FM	Card Deleted			09/06/2012		
				10413776	TO	Card Deleted			09/06/2012		
			M-DCP-Z-11003/R1	10444154	CA	Printed			05/30/2019		
				10444155	FM	Printed			05/30/2019		
				10444156	TO	Printed			05/30/2019		
		205J1231XA	M-DCP-Z-11003	10414042	CA	Printed			09/06/2012		
				10414043	FM	Printed			09/06/2012		
				10414044	TO	Printed			09/06/2012		
		205J1282XA	M-DCP-Z-11003	10413822	CA	Printed			09/06/2012		
				10413823	FM	Printed			09/06/2012		
				10413824	TO	Printed			09/06/2012		

Installation Card Status Report

Drawing: M-DCP-Z-11003 Rev: 1

Unit	CT	ID	DCD	Card No	CT	Status	Work Order	WBS	Printed	Installed	Inspected
SS	CA	205J1282XB	M-DCP-Z-11003	10413825	CA	Printed			09/06/2012		
				10413826	FM	Printed			09/06/2012		
				10413827	TO	Printed			09/06/2012		
		205J1282XC	M-DCP-Z-11003	10413828	CA	Printed			09/06/2012		
				10413829	FM	Printed			09/06/2012		
				10413830	TO	Printed			09/06/2012		
		205J1282XD	M-DCP-Z-11003	10413831	CA	Printed			09/06/2012		
				10413832	FM	Printed			09/06/2012		
				10413833	TO	Printed			09/06/2012		
		205J1282XE	M-DCP-Z-11003	10413834	CA	Card Deleted			09/06/2012		
				10413835	FM	Card Deleted			09/06/2012		
				10413836	TO	Card Deleted			09/06/2012		
			M-DCP-Z-11003/R1	10444585	TO	Printed			05/30/2019		
				10444586	CA	Printed			05/30/2019		
				10444587	FM	Printed			05/30/2019		
		210E029RH	M-DCP-Z-11003	10413849	CA	Printed			09/06/2012		
				10413850	FM	Printed			09/06/2012		
				10413851	TO	Printed			09/06/2012		
	CO	B1RX001	M-DCP-Z-11003	10413847	RW	Printed			09/06/2012		
		B4RF015	M-DCP-Z-11003	10376483	RW	Printed			09/06/2012		
		B4RF019	M-DCP-Z-11003	10376718	RW	Printed			09/06/2012		
		B4RF020	M-DCP-Z-11003	10375695	RW	Printed			09/06/2012		
		B4RF023	M-DCP-Z-11003	10378395	RW	Printed			09/06/2012		
		B4RX001	M-DCP-Z-11003	10413837	RW	Printed			09/06/2012		
		B4RX002	M-DCP-Z-11003	10413838	RW	Printed			09/06/2012		
		B4RX003	M-DCP-Z-11003	10413839	RW	Printed			09/06/2012		
		B4RX004	M-DCP-Z-11003	10413840	RW	Printed			09/06/2012		
		B5RF002	M-DCP-Z-11003	10413652	RW	Card Deleted			09/06/2012		
			M-DCP-Z-11003/R1	10444102	RW	Printed			05/30/2019		
		B5RF003	M-DCP-Z-11003	10413653	RW	Card Deleted			09/06/2012		
			M-DCP-Z-11003/R1	10444111	RW	Printed			05/30/2019		
		B5RF004	M-DCP-Z-11003	10413654	RW	Card Deleted			09/06/2012		
			M-DCP-Z-11003/R1	10444116	RW	Printed			05/30/2019		
		B5RF005	M-DCP-Z-11003	10413655	RW	Card Deleted			09/06/2012		
			M-DCP-Z-11003/R1	10444173	RW	Printed			05/30/2019		
		B5RF006	M-DCP-Z-11003	10413656	RW	Printed			09/06/2012		
		B5RF007	M-DCP-Z-11003	10413657	RW	Card Deleted			09/06/2012		
			M-DCP-Z-11003/R1	10444165	RW	Printed			05/30/2019		
		B5RF008	M-DCP-Z-11003	10413658	RW	Card Deleted			09/06/2012		
			M-DCP-Z-11003/R1	10444163	RW	Printed			05/30/2019		
		B5RF009	M-DCP-Z-11003	10413659	RW	Card Deleted			09/06/2012		

Installation Card Status Report

Drawing: M-DCP-Z-11003 Rev: 1

Unit	CT	ID	DCD	Card No	CT	Status	Work Order	WBS	Printed	Installed	Inspected
SS	CO	B5RF009	M-DCP-Z-11003/R1	10444161	RW	Printed			05/30/2019		
		B5RF010	M-DCP-Z-11003	10413660	RW	Card Deleted			09/06/2012		
			M-DCP-Z-11003/R1	10444589	RW	Printed			05/30/2019		
		B5RF011	M-DCP-Z-11003	10413661	RW	Card Deleted			09/06/2012		
			M-DCP-Z-11003/R1	10444588	RW	Printed			05/30/2019		
		B5RF012	M-DCP-Z-11003	10413662	RW	Card Deleted			09/06/2012		
			M-DCP-Z-11003/R1	10444150	RW	Printed			05/30/2019		
		B5RF013	M-DCP-Z-11003	10413663	RW	Card Deleted			09/06/2012		
			M-DCP-Z-11003/R1	10444148	RW	Printed			05/30/2019		
		B5RF014	M-DCP-Z-11003	10413664	RW	Card Deleted			09/06/2012		
			M-DCP-Z-11003/R1	10444146	RW	Printed			05/30/2019		
		B5RF015	M-DCP-Z-11003	10413665	RW	Card Deleted			09/06/2012		
			M-DCP-Z-11003/R1	10444144	RW	Printed			05/30/2019		
		B5RF016	M-DCP-Z-11003	10413666	RW	Card Deleted			09/06/2012		
			M-DCP-Z-11003/R1	10444177	RW	Printed			05/30/2019		
		B5RF017	M-DCP-Z-11003	10413667	RW	Card Deleted			09/06/2012		
			M-DCP-Z-11003/R1	10444130	RW	Printed			05/30/2019		
		B5RF018	M-DCP-Z-11003	10413668	RW	Card Deleted			09/06/2012		
			M-DCP-Z-11003/R1	10444128	RW	Printed			05/30/2019		
		B5RF019	M-DCP-Z-11003	10413669	RW	Card Deleted			09/06/2012		
			M-DCP-Z-11003/R1	10444126	RW	Printed			05/30/2019		
		B5RF020	M-DCP-Z-11003	10413670	RW	Card Deleted			09/06/2012		
			M-DCP-Z-11003/R1	10444124	RW	Printed			05/30/2019		
	EQ	LOS-302	M-DCP-Z-11003	10413616	EQ	Feedback Partial			09/06/2012		
		Z-205000-BMH-PNL-1000	M-DCP-Z-11003	10413821	EQ	Printed			09/06/2012		
		Z-205000-BMH-TBB5001	M-DCP-Z-11003	10413620	EQ	Card Deleted			09/06/2012		
			M-DCP-Z-11003/R1	10444103	EQ	Printed			05/30/2019		
		Z-205000-BMH-TBB5002	M-DCP-Z-11003	10413619	EQ	Card Deleted			09/06/2012		
			M-DCP-Z-11003/R1	10444166	EQ	Printed			05/30/2019		
		Z-205000-BMH-TBB5003	M-DCP-Z-11003	10413621	EQ	Card Deleted			09/06/2012		
			M-DCP-Z-11003/R1	10444098	EQ	Printed			05/30/2019		
		Z-205000-BMH-TBB5004	M-DCP-Z-11003	10413622	EQ	Card Deleted			09/06/2012		
			M-DCP-Z-11003/R1	10444131	EQ	Printed			05/30/2019		
		Z-205008-BMH-CAB-1	M-DCP-Z-11003	10414064	EQ	Card Deleted			09/06/2012		
			M-DCP-Z-11003/R1	10444584	EQ	Printed			05/30/2019		
		Z-210000-EEP-PNL-0168	M-DCP-Z-11003	10413848	EQ	Printed			09/06/2012		
	IN	HCV1282	M-DCP-Z-11003/R1	10444178	IN	Printed			05/30/2019		
		HCV1283	M-DCP-Z-11003	10413705	IN	Card Deleted			09/06/2012		
			M-DCP-Z-11003/R1	10444179	IN	Printed			05/30/2019		
		HCV1284	M-DCP-Z-11003	10413706	IN	Card Deleted			09/06/2012		
			M-DCP-Z-11003/R1	10444181	IN	Printed			05/30/2019		

Installation Card Status Report

Drawing: M-DCP-Z-11003 Rev: 1

Unit	CT	ID	DCD	Card No	CT	Status	Work Order	WBS	Printed	Installed	Inspected
SS	IN	HCV1285	M-DCP-Z-11003	10413702	IN	Card Deleted			09/06/2012		
			M-DCP-Z-11003/R1	10444180	IN	Printed			05/30/2019		
		Z-205000-BMH-SV-1009A	M-DCP-Z-11003	10413623	IN	Card Deleted			09/06/2012		
			M-DCP-Z-11003/R1	10444073	IN	Printed			05/30/2019		
		Z-205000-BMH-SV-1009B	M-DCP-Z-11003	10413624	IN	Card Deleted			09/06/2012		
			M-DCP-Z-11003/R1	10444080	IN	Printed			05/30/2019		
		Z-205000-BMH-SV-1009C	M-DCP-Z-11003	10413625	IN	Card Deleted			09/06/2012		
			M-DCP-Z-11003/R1	10444081	IN	Printed			05/30/2019		
		Z-205000-BMH-SV-1009D	M-DCP-Z-11003	10413626	IN	Card Deleted			09/06/2012		
			M-DCP-Z-11003/R1	10444082	IN	Printed			05/30/2019		
		Z-205000-BMH-SV-2009A	M-DCP-Z-11003	10413627	IN	Card Deleted			09/06/2012		
			M-DCP-Z-11003/R1	10444083	IN	Printed			05/30/2019		
		Z-205000-BMH-SV-2009B	M-DCP-Z-11003	10413628	IN	Card Deleted			09/06/2012		
			M-DCP-Z-11003/R1	10444084	IN	Printed			05/30/2019		
		Z-205000-BMH-SV-2009C	M-DCP-Z-11003	10413629	IN	Card Deleted			09/06/2012		
			M-DCP-Z-11003/R1	10444085	IN	Printed			05/30/2019		
		Z-205000-BMH-SV-2009D	M-DCP-Z-11003	10413630	IN	Card Deleted			09/06/2012		
			M-DCP-Z-11003/R1	10444086	IN	Printed			05/30/2019		
		Z-205000-BMH-SV-3009A	M-DCP-Z-11003	10413631	IN	Card Deleted			09/06/2012		
			M-DCP-Z-11003/R1	10444087	IN	Printed			05/30/2019		
		Z-205000-BMH-SV-3009B	M-DCP-Z-11003	10413632	IN	Card Deleted			09/06/2012		
			M-DCP-Z-11003/R1	10444088	IN	Printed			05/30/2019		
		Z-205000-BMH-SV-3009C	M-DCP-Z-11003	10413633	IN	Card Deleted			09/06/2012		
			M-DCP-Z-11003/R1	10444079	IN	Printed			05/30/2019		
		Z-205000-BMH-SV-3009D	M-DCP-Z-11003	10413634	IN	Card Deleted			09/06/2012		
			M-DCP-Z-11003/R1	10444078	IN	Printed			05/30/2019		
		Z-205000-BMH-SV-4009A	M-DCP-Z-11003	10413635	IN	Card Deleted			09/06/2012		
			M-DCP-Z-11003/R1	10444077	IN	Printed			05/30/2019		
		Z-205000-BMH-SV-4009B	M-DCP-Z-11003	10413636	IN	Card Deleted			09/06/2012		
			M-DCP-Z-11003/R1	10444076	IN	Printed			05/30/2019		
		Z-205000-BMH-SV-4009C	M-DCP-Z-11003	10413637	IN	Card Deleted			09/06/2012		
			M-DCP-Z-11003/R1	10444075	IN	Printed			05/30/2019		
		Z-205000-BMH-SV-4009D	M-DCP-Z-11003	10413638	IN	Card Deleted			09/06/2012		
			M-DCP-Z-11003/R1	10444074	IN	Printed			05/30/2019		
		Z-205000-BMH-WY-1282	M-DCP-Z-11003	10413817	IN	Printed			09/06/2012		
		Z-205000-BMH-WY-1283	M-DCP-Z-11003	10413818	IN	Printed			09/06/2012		
		Z-205000-BMH-WY-1284	M-DCP-Z-11003	10413819	IN	Printed			09/06/2012		
		Z-205000-BMH-WY-1285	M-DCP-Z-11003	10413820	IN	Printed			09/06/2012		
	SR	Z-205000-BMH-PBB5011	M-DCP-Z-11003	10413683	RW	Card Deleted			09/06/2012		
			M-DCP-Z-11003/R1	10444104	RW	Printed			05/30/2019		
		Z-205000-BMH-PBB5012	M-DCP-Z-11003	10413684	RW	Card Deleted			09/06/2012		

Installation Card Status Report

Drawing: M-DCP-Z-11003 Rev: 1

Unit	CT	ID	DCD	Card No	CT	Status	Work Order	WBS	Printed	Installed	Inspected
SS	SR	Z-205000-BMH-PBB5012	M-DCP-Z-11003/R1	10444112	RW	Printed			05/30/2019		
		Z-205000-BMH-PBB5013	M-DCP-Z-11003	10413685	RW	Card Deleted			09/06/2012		
			M-DCP-Z-11003/R1	10444117	RW	Printed			05/30/2019		
		Z-205000-BMH-PBB5021	M-DCP-Z-11003	10413686	RW	Card Deleted			09/06/2012		
			M-DCP-Z-11003/R1	10444164	RW	Printed			05/30/2019		
		Z-205000-BMH-PBB5022	M-DCP-Z-11003	10413687	RW	Card Deleted			09/06/2012		
			M-DCP-Z-11003/R1	10444162	RW	Printed			05/30/2019		
		Z-205000-BMH-PBB5023	M-DCP-Z-11003	10413688	RW	Card Deleted			09/06/2012		
			M-DCP-Z-11003/R1	10444160	RW	Printed			05/30/2019		
		Z-205000-BMH-PBB5031	M-DCP-Z-11003	10413689	RW	Card Deleted			09/06/2012		
			M-DCP-Z-11003/R1	10444149	RW	Printed			05/30/2019		
		Z-205000-BMH-PBB5032	M-DCP-Z-11003	10413690	RW	Card Deleted			09/06/2012		
			M-DCP-Z-11003/R1	10444147	RW	Printed			05/30/2019		
		Z-205000-BMH-PBB5033	M-DCP-Z-11003	10413691	RW	Card Deleted			09/06/2012		
			M-DCP-Z-11003/R1	10444145	RW	Printed			05/30/2019		
		Z-205000-BMH-PBB5041	M-DCP-Z-11003	10413692	RW	Card Deleted			09/06/2012		
			M-DCP-Z-11003/R1	10444129	RW	Printed			05/30/2019		
		Z-205000-BMH-PBB5042	M-DCP-Z-11003	10413693	RW	Card Deleted			09/06/2012		
			M-DCP-Z-11003/R1	10444127	RW	Printed			05/30/2019		
		Z-205000-BMH-PBB5043	M-DCP-Z-11003	10413694	RW	Card Deleted			09/06/2012		
			M-DCP-Z-11003/R1	10444125	RW	Printed			05/30/2019		

Prepared by: Jonathan McMorris
Reviewed by: Stephen Posey

1.0 Implementing Documentation

DCS CMT #: CMT-SS-2019-00009
CMT-SS-2019-00010
CMT-SS-2019-00011
CMT-SS-2019-00012
PI CMT #: CMT-SS-2019-00013

2.0 Overview

The (4) Silos will have the lower cone section (Air Hopper) removed and the fabric will be replaced. The aeration system will be modified to allow for better monitoring and more control of the air flow to the Silos. New slide gate valves will replace the second butterfly valve – downstream of the Air Slides. Flexible couplings between the slide gate valves and weigh hopper and weigh hopper and air blenders will be replaced.

The implementation strategy for this DCP is that each valve will be replaced one at a time. Therefore, the software implementation will be spread between the four above cmts. The first cmt will handle software associated with SILO 1. Then each subsequent cmt will continue with SILO 2 and associated software until reaching SILO 4.

Process Control Modification Summary

- Remove modules HCV1282, HCV1283, HCV1284, and HCV1285
- Add HIC1282, HIC1283, HIC1284, and HIC1285.
- Modify WEIGH_SEQ accordingly

Note: This is preliminary software design. Information presented is for reference only

3.0 DCS Changes

3.1. DCS Module List

Area: BMH_WEIGH

Module	Description	Description of Change
HCV1282	SILO #4 WEIGH HOPPER INLET VALVE	delete
HCV1283	SILO #1 WEIGH HOPPER INLET VALVE	delete
HCV1284	SILO #2 WEIGH HOPPER INLET VALVE	delete
HCV1285	SILO #3 WEIGH HOPPER INLET VALVE	delete

Module	Description	Description of Change
HIC1282	SILO #4 WEIGH HOPPER INLET CONTROL VALVE	– Create new module of type MAN_LDR_1N1O_NC – Assign ZT-1282 to AI1 – Set AI1/XD_SCALE 0 to 100 % – Set AI1/OUT_SCALE 0 to 100 % – Assign WCV-1282 to AO1 – Assign ZI-1282 to AO2 – Add W754524 PID_REFS – Add AC52406A, J-J8-Z-00032, and J-JZ-Z-00308 to OTHER_REFS
HIC1283	SILO #1 WEIGH HOPPER INLET CONTROL VALVE	– Create new module of type MAN_LDR_1N1O_NC – Assign ZT-1283 to AI1 – Set AI1/XD_SCALE 0 to 100 % – Set AI1/OUT_SCALE 0 to 100 % – Assign WCV-1283 to AO1 – Assign ZI-1283 to AO2 – Add W754524 PID_REFS – Add AC52406A, J-J8-Z-00032, and J-JZ-Z-00309 to OTHER_REFS
HIC1284	SILO #2 WEIGH HOPPER INLET CONTROL VALVE	– Create new module of type MAN_LDR_1N1O_NC – Assign ZT-1284 to AI1 – Set AI1/XD_SCALE 0 to 100 % – Set AI1/OUT_SCALE 0 to 100 % – Assign WCV-1284 to AO1 – Assign ZI-1284 to AO2 – Add W754524 PID_REFS – Add AC52406A, J-J8-Z-00032, and J-JZ-Z-00310 to OTHER_REFS

Module	Description	Description of Change
HIC1285	SILO #3 WEIGH HOPPER INLET CONTROL VALVE	– Create new module of type **MAN_LDR_1N1O_NC** – Assign ZT-1285 to AI1 – Set AI1/XD_SCALE 0 to 100 % – Set AI1/OUT_SCALE 0 to 100 % – Assign WCV-1285 to AO1 – Assign ZI-1285 to AO2 – Add W754524 PID_REFS – Add AC52406A, J-J8-Z-00032, and J-JZ-Z-00311 to OTHER_REFS
WEIGH_SEQ	Noltec Weigh Sequence	– Remove references to HCV1282, HCV1283, HCV1284, and HCV1285 – Add references for HIC1282, HIC1283, HIC1284, and HIC1285

Area: DRYMAT

Module	Description	Description of Change
LI1231	CEMENT SILO #3 LVL	– Covert traditional I/O to Fieldbus I/O – Assign LIT-1231 to AI1 block – Set AI1/XD_SCALE to 4 to 20 mA – Set AI1/OUT_SCALE to 0 to 50 ft – Set AI1/CHANNEL to 1 – Add J-J8-Z-00032 and AC4757A to OTHER_REFS

3.2. Graphical Changes

File / Graphic Name	Description of Change
D24_DryMaterials.grf / (D24) DRY MATERIALS	Remove HCV1282, HCV1283, HCV1284, and HCV1285 and new HICs
DryMaterials_WEIGH.grf / (24_1) DRY MATERIALS - WEIGH	Remove HCV1282, HCV1283, HCV1284, and HCV1285 and new HICs

3.3. DCS I/O Changes

I/O File	Description of Change
CTRLCAB1-2 / C41	– Disable CH04 – Change description from F/A SILO#3 LVL to **SPARE** – Change device tag from LIT-1231 to **CON01C41CH04**

I/O File	Description of Change
LOS302 / C02	– Disable CH01 – Change description from SILO #1 WEIGH HOPPER INLET to **SPARE** – Change device tag from SV-1283 to **CON03C02CH01**
	– Disable CH02 – Change description from SILO #2 WEIGH HOPPER INLET to **SPARE** – Change device tag from SV-1284 to **CON03C02CH02**
	– Disable CH03 – Change description from SILO #3 WEIGH HOPPER INLET to **SPARE** – Change device tag from SV-1285 to **CON03C02CH03**
	– Disable CH04 – Change description from SILO #4 WEIGH HOPPER INLET to **SPARE** – Change device tag from SV-1282 to **CON03C02CH04**
LOS302 / C04	– Disable CH01 – Change description from SILO #1 WH INLET OPEN ZS to **SPARE** – Change device tag from ZS-1283A to **CON03C04CH01**
	– Disable CH02 – Change description from SILO #2 WH INLET OPEN ZS to **SPARE** – Change device tag from ZS-1284A to **CON03C04CH02**
	– Disable CH03 – Change description from SILO #3 WH INLET OPEN ZS to **SPARE** – Change device tag from ZS-1285A to **CON03C04CH03**
	– Disable CH04 – Change description from SILO #4 WH INLET OPEN ZS to **SPARE** – Change device tag from ZS-1282A to **CON03C04CH04**
LOS302 / C25	– Disable CH01 – Change description from SILO #1 WH INLET CLOSED ZS to **SPARE** – Change device tag from ZS-1283B to **CON03C25CH01**
	– Disable CH02 – Change description from SILO #2 WH INLET CLOSED ZS to **SPARE** – Change device tag from ZS-1284B to **CON03C25CH02**
	– Disable CH03 – Change description from SILO #3 WH INLET CLOSED ZS to **SPARE** – Change device tag from ZS-1285B to **CON03C25CH03**

I/O File	Description of Change	
	– Disable CH04 – Change description from SILO #4 WH INLET CLOSED ZS to **SPARE** – Change device tag from ZS-1282B to **CON03C25CH04**	
LOS302 / C30	– Add new AO card – Add **AO #30** to description – Set card type to **8 Channel, 4-20mA, HART** – Set card series to **Series 2** – Slot position **30**	
	– Enable CH01 – Change description to **SILO 4 - VALVE POSITION** – Change device tag to **ZI-1282**	
	– Enable CH02 – Change description to **SILO 1 - VALVE POSITION** – Change device tag to **ZI-1283**	
	– Enable CH03 – Change description to **SILO 2 - VALVE POSITION** – Change device tag to **ZI-1284**	
	– Enable CH04 – Change description to **SILO 3 - VALVE POSITION** – Change device tag to **ZI-1285**	
LOS302 / C31	– Add new H1 card – Add **Fieldbus #31** to description – Set card type to **Fieldbus H1, 2 Ports** – Set card series to **Series 2** – Slot position **31** – Create the following devices below on **Port 1**	
	UT-1231	– Description: **SILO 3 LEVEL** – Manufacturer: **Rosemount Inc.** – Device type: **848 Fieldbus Temperature Device** – Device revision: **7** – Rename any FFAI_XXX to **LIT-1231** and change description to **SILO #3 LEVEL**

I/O File	Description of Change	
	WCV-1282	– Description: **SILO 4 WEIGH HOPPER INLET VALVE** – Manufacturer: **Fisher Controls** – Device type: **FISHER DVC6000F - SC - rev 1** – Device revision: **1** – Rename any FFAI_XXX to **ZT-1282** and change description to **SILO 4 TO WEIGH HOPPER VLV POS** – Rename any FFAO_XXX to **WCV-1282** and change description to **SILO 4 TO WEIGH HOPPER**
	WCV-1283	– Description: **SILO 1 WEIGH HOPPER INLET VALVE** – Manufacturer: **Fisher Controls** – Device type: **FISHER DVC6000F - SC - rev 1** – Device revision: **1** – Rename any FFAI_XXX to **ZT-1283** and change description to **SILO 1 TO WEIGH HOPPER VLV POS** – Rename any FFAO_XXX to **WCV-1283** and change description to **SILO 1 TO WEIGH HOPPER**
	WCV-1284	– Description: **SILO 2 WEIGH HOPPER INLET VALVE** – Manufacturer: **Fisher Controls** – Device type: **FISHER DVC6000F - SC - rev 1** – Device revision: **1** – Rename any FFAI_XXX to **ZT-1284** and change description to **SILO 2 TO WEIGH HOPPER VLV POS** – Rename any FFAO_XXX to **WCV-1284** and change description to **SILO 2 TO WEIGH HOPPER**
	WCV-1285	– Description: **SILO 3 WEIGH HOPPER INLET VALVE** – Manufacturer: **Fisher Controls** – Device type: **FISHER DVC6000F - SC - rev 1** – Device revision: **1** – Rename any FFAI_XXX to **ZT-1285** and change description to **SILO 3 TO WEIGH HOPPER VLV POS** – Rename any FFAO_XXX to **WCV-1285** and change description to **SILO 3 TO WEIGH HOPPER**

4.0 PI Changes

– Delete modules HCV1282, HCV1283, HCV1284, and HCV1285

- Add modules HIC1282, HIC1283, HIC1284, and HIC1285

5.0 PSD Checklist

Item	Description	Yes	No	N/A	Notes
A.	**GENERAL/DESIGN INPUT/LOGIC**				
A.1	If changes to the Requirements Specifications for Software (RSS), the Design Document for Software (DDS) or the Design Input/MT are needed for implementation, have these been made?	✓			
A.2	Is there sufficient logic in the DCP describing equipment operation, alarms and interlocks to implement the software (e.g., CLDs, Process Control Descriptions (PCDs), Notes on P&IDs, or reference to existing equipment to emulate, or description in MT (design input), etc.)?	✓			
A.3	Will the design work properly?	✓			
A.4	Are the sources for any cascaded inputs correctly shown in the design?	✓			
A.5	Are all module numbers correctly included on appropriate drawings (e.g., P&IDs, CLDs, I/O List, Schematics, etc.)?	✓			
A.6	Have any potential conflicts between module or device names being added and module/device names already existing in the facility been addressed?	✓			
A.7	Are any required calculations, conversions or correction factors adequately addressed in DCP/MT (e.g., tank level inches to gallons calculation, or tank calibrations)?	✓			
A.8	Does the design include necessary fault logic/failure mode design for new/modified equipment or I/O?	✓			
A.9	Are software-related symbols on the P&ID, CLD, and other similar drawings per existing standards and/or consistent with existing facility design documents?	✓			
	Informational				
A.10	Is coordination required with other CMTs or designs? If so, list numbers.	✓			See CMTs listed above
A.11	Are control loop modes defined in the design (e.g., AUTO, CASCADE, MANUAL)?		✓		Available modes implied by use of applicable controller on P&ID
A.12	Are failure modes for interlocks specified in the design? (e.g., If the analog signal that causes the switch has a bad status, does the interlock need to trigger or should it just be concerned with the value?)		✓		Not required in DCP

Item	Description	Yes	No	N/A	Notes
B	**INPUT/OUTPUT**				
B.1	Are the modified points on the I/O list consistent with other design documents (e.g., P&ID, CLD, schematics, loop drawings, wiring drawings, segment drawings, work instructions, etc.)?	✓			
B.2	Is there available spare I/O for any new I/O points being added by DCP?	✓			
B.3	Has I/O been evaluated for proper controller assignment?	✓			
B.4	Are datasheets available for new fieldbus devices (e.g., VFDs, Control Valves, motor nameplate data, etc.)?		✓		Equipment of similar type are being used
B.5	Are there available DST licenses for any I/O added by design?	✓			
B.6	Is all I/O modified by DCP correctly included in the I/O list?	✓			
B.7	Are instrument ranges, alarm/interlock setpoints, alarm priorities adequately addressed by the DCP? List DCN No. or DCF No. if ASPD is revised by DCF generated by DA.	✓			
B.8	Have segment loading properties (power) been verified/documented to be acceptable for new fieldbus devices (e.g., bandwidth, segment length, power loading, baud rate)?	✓			
B.9	Has segment timing (macrocycle) been verified/documented to be acceptable for modified fieldbus devices and segments?	✓			
B.10	Does design show location of wireless devices/gateways and include necessary repeaters?			✓	No wireless I/O in DCP
B.11	Is there capacity on intended gateways for new wireless devices?			✓	No new wireless devices
B.12	Do new wireless components meet cyber security requirements?			✓	No new wireless devices
	Informational				
B.13	Are alarm priorities and other alarm/interlock parameters (e.g., hysteresis, dead-band, etc.) addressed by the DCP?		✓		Not required in DCP
B.14	Is any fieldbus equipment being added or modified by the DCP? If so, describe type(s).	✓			Adding 4 Fieldbus valves and a 848T
B.15	Will any fieldbus equipment require new device definitions?	✓			
B.16	Does design include failure state of any I/O with configurable failure modes?	✓			
B.17	Are trouble/failure alarms for new instruments/power supplies included in DCP?		✓		

Item	Description	Yes	No	N/A	Notes
B.18	Are there any new/modified wireless devices?		✓		
B.19	Are all new wireless devices consistent with other wireless devices in the facility?			✓	No new wireless devices
B.20	Are parameters required to configure the wireless devices (such as update rates) included in the design?			✓	No new wireless devices
B.21	Are I/O failure alarms, including priorities, included in DCP?		✓		Not required in DCP
C	**HARDWARE INTERFACES**				
C.1	Is there available capacity on existing network switches for new devices being added by DCP?			✓	No new devices requiring network switches
C.2	Are the proper type of network switches specified (e.g., managed versus non-managed)?			✓	No new network switches
C.3	Are all new DCS/PLC components (e.g., DCS controllers, power supplies, fieldbus devices, wireless devices, network switches, I/O cards, PLC input/output modules, etc.) compatible with existing facility?	✓			
C.4	Are all DCS/PLC digital output control contacts shown on schematics rated adequately for the load device (e.g., relay/contactor/solenoid valve, etc.)?	✓			
C.5	Are all new DCS/PLC components/cards described in Materials List, Data Sheet, BOM or other procurement documents included/referenced by DCP?	✓			
C.6	Is there spare capacity to add the new module(s) to the intended controller (e.g., FRETIM, FREMEM, etc.)?	✓			FreMem = 46086448 and FreTim = 60
	Informational				
C.7	Are all new DCS/PLC components/cards consistent with equipment already in use in the facility (e.g., on Recommended Equipment List)?	✓			
C.8	Are there any cyber security implications of new components or devices being added by the DCP (e.g., adding hardware to Ethernet)?			✓	No new components or devices being added to network
C.9	Is all calibration equipment (e.g., flow calibrators, Hart Communicators, etc.) required by new process control equipment in DCP included in Materials List or other procurement documents referenced by design?		✓		Equipment configuration software maintained by maintenance / start-up testing
D	**SOFTWARE**				

Item	Description	Yes	No	N/A	Notes
D.1	Is new required software specified in DCP Material List, Bill of Materials, or other procurement document referenced by or included in the DCP?			✓	No new required software
	Informational				
D.2	If any new I/O points, field devices, consoles, etc. that require licensing are added, will new licenses need to be acquired?		✓		
D.3	Does any new software included in the DCP require validation or certifications?			✓	No new software included in DCP
E	**MISCELLANEOUS/EQUIPMENT**				
E.1	Are all vendor-provided equipment controls (e.g., control panels, skid-mounted equipment, etc.) compatible with the PLC/DCS?			✓	No vendor-provided equipment controls
E.2	Are all the communication protocols adequate between vendor-supplied process control equipment in this design and existing equipment?			✓	No vendor-provided equipment controls
E.3	Has communication cabling been specified in design to ensure compatible connectors and type for proper interface with new/modified equipment?	✓			
E.4	Have environmental conditions been addressed (e.g., HVAC in room, cabinet or enclosure with new DCS/PLC equipment being added?	✓			
E.5	Have human factors been addressed in this design?	✓			
E.6	Are PLC components, including any new Human Machine Interface (HMI), compatible with existing design?	✓			
	Informational				
E.7	Are there available Historical Collection Licenses for modifications made by this design?	✓			

M-DCP-Z-11003 Rev 1

Calculation Cover Sheet

Project/Task : Silo Bin Aeration System and Slide Gate Valves	Calculation No. m-dcp-z-11003-clc-t2-m1	Project/Task No. N/A
Title Pressure Regulator Setpoints for Aeration Lines	Functional Classification PS	Sheet 1 of 84
	Discipline Mechanical	
☐Type 1 ☒Type 2	Type 1 Calc Status ☐Preliminary ☐Confirmed	
Computer Program No. ☒N/A	Version/Release No. N/A	
Purpose: Purpose: Determine the pressure drop in the silo aeration lines between the low pressure regulator and the silo. Objective: Establish the setpoint and pressure range for the low pressure PCVs. The setpoint is based on maintaining the air plenum pressure, recommended by the Jenike & Johanson evaluation (0.25 psig). The range for the PCV is based on the range of flow rates recommended in the Jenike & Johanson evaluation.	DC/RO Date_____	

Summary of Results

Results:

Ring headers: at normal flow the setpoint is 1.1 psig, at maximum flow the setpoint is 1.2 psig. considering the max setpoint at 80% of the PCV range – the range is 0 to 1.5 psig.

Aeration pads: at normal flow the setpoint is 1.4 psig, at maximum flow the setpoint is 2.7 psig. considering the max setpoint at 80% of the PCV range – the range is 0 to 3.4 psig.

Conclusion: Ring headers: setpoint = 1.1 psig or 30" W.C., range is 0 to 1.5 psig or 0 to 40" W.C.
Aeration pads: setpoint 1.4 psig or 38" W.C., range is 0 to 3.4 psig or 0 to 90" W.C.

	Revisions
Rev #	Revision Description
N/A	N/A
1	Revised the calculation to provide the set points and the pressure ranges for the low pressure PCVs.

Sign Off

Rev #	Originator (Print) Sign/Date	Verification/Checking Method	Verifier/Checker (Print) Sign/Date	Manager (Print) Sign/Date
0	Oren Webb	☒ Design Check (GS/PS only) ☐ Document Review ☐ Qualification Testing ☐ Alternative Calculation ☐ Operational Testing	Gary Stasie	William Bruss
1	Gary Stasie Approvals maintained in DCR/EDWS	☒ Design Check (GS/PS only) ☐ Document Review ☐ Qualification Testing ☐ Alternative Calculation ☐ Operational Testing	David Massey Approvals maintained in DCR/EDWS	Chris Schilling Approvals maintained in DCR/EDWS

Additional Reviewer (Print) N/A	Signature N/A	Date N/A
Design Authority (Print) N/A	Signature N/A	Date N/A
Release to Outside Agency (Print) N/A	Signature N/A	Date N/A
Security Classification of the Calculation N/A		

Calculation Continuation Sheet

Calculation No. m-dcp-z-11003-clc-t2-m1	Sheet No. Sheet 2 of 84	Rev. 1

Summary:

The existing aeration system supplies air to both air permeation shelves, which are regions or plenums located inside the silo at two different elevations. The “ring header” is a pipe which encircles the silo and has six nozzles which provide air to the respective permeation shelf. The aeration system also supplies air to the Nol-Tec 255 Bin Discharger which is the lower portion of the conical section of the silo. Inside the Bin Discharger are four sections which act as air plenums (refered to in this calulation as “air pads”) and serve to aerate the dry feed material to allow it to flow more freely.

Currently, the air supply to the discharger passes through a section of 1/8” tubing that restricts the airflow to approximately 5 cfm to the Bin Discharger (all 4 air plenums or “aeration pads”), which is insufficient for proper operation of the bin discharger. This calculation encorporates the suggestions made in the Jenike & Johanson evaluation of the dry feed aeration system and establishes the setpoints for the low pressure regulators of the new aeration system design (M-DCP-Z-11003). The new system design will provide sufficient air flow and greater flexibility in modifying the range of air flow and air plenum pressure. The overall design goal is to improve the ‘flowability’ of the dry feed material and prevent “bridging” and “ratholing”.

1.0 OPEN ITEMS

None

2.0 REFERENCES

2.1 Crane, Flow of Fluids – Technical Paper No. 410 – publication date; Nov 2009.

2.2 Jenike & Johanson, Improving the Handling of Fly Ash at Saltstone Plant, November 2005.

3.0 INPUTS and ASSUMPTIONS:

3.1 INPUTS

3.1.1 Flow rate for the air supply to the ring headers: 1 SCFM < 5 SCFM (ref. 2.2).

3.1.2 Flow rate for the air supply to the aeration pads: 5 SCFM < 25 SCFM (each pad or plenum) (ref. 2.2).

3.1.3 Plenum pressure for air permeation shelves and bin discharger aeration pads): 0.25 psig (ref. 2.2).

3.1.4 Pipe used in the aeration system shall meet DWPF P004. Since the existing system is primarily threaded pipe – threaded pipe (schedule 80 – per DWPF P004) is used in this design (ref. M-DCP-Z-11003 M-00001).

3.1.5 Pipe length between the low pressure regulator and the silo:

Piping to the ring header; 16 ft. of ¾” pipe, and 69 ft. of 1” pipe.

Piping to the aeration pads; 45 ft. of 1” pipe.

(ref. M-DCP-Z-11003 P00005, and P00006).

3.1.6 Size and quantity of in-line fittings and instrumentation: ref. M-DCP-Z-11003 M00001.

3.1.7 Pressure drop in the flow indicator in the air line to the ring headers: 23” WC (ref. Attachment 7.3).

3.1.8 Pressure drop in the flow indicator in the air line to the aeration pads: 29” WC (ref. Attachment 7.3).

3.2 ASSUMPTIONS

3.2.1 The air temperature at the input to the lines being evaluated is 100 ^{0}F. Basis: The normal operating temperature of the air provided by the Process Air Compressor System. This considered a conservative estimate since the air will cool within the dry receiver and air transfer lines.

3.2.2 For the line to the ring header; 16 ft. of ¾” pipe from the PCV to the flow indicator, 30 ft. of 1” pipe from the flow indicator to the ring header, and 39 ft. of 1” pipe for the ring header (the ring header diameter is estimated to be 25 ft., one half of the circumference is 39 ft.). Basis: The length of pipe is conservatively estimated for the longest run from the piping plans and sections.

For the line to the aeration pads the pipe downstream of the PCV is all 1” and the longest run is estimated to be 45 feet.

Calculation Continuation Sheet

Calculation No. m-dcp-z-11003-clc-t2-m1	Sheet No. Sheet 3 of 84	Rev. 1

4.0 ANALYTICAL METHODS AND COMPUTATIONS:

4.1 The total pressure drop is determined by calculating and summing the individual pressure drops for each component in the line between the the low pressure PCV and the silo. The method used is defined in reference 2.1.

4.2 The calculations are performed using Mathcad software.

4.3 The individual pressure drops in each line are calculated for the nominal and maximum anticipated flow rates. This pressure drop plus the plenum pressure determines the setpoint for the low pressure PCV. The setpoint for the maximum flow rate establishes the range for the low pressure PCV. The flow rates and the plenum pressure are recommended in the Jenike and Johansen evaluation (Attachment 7.1).

4.4 Refer to the sketch in Attachment 7.2 for the lines being evaluated. Also refer to the DCNs: M-DCP-Z-11003 P-00005 and M-DCP-Z-11003 P-00006, for determining the line lengths, number of fittings, valves and instruments per line.

4.5 Refer to Attachment 7.3 for flow indicator cutsheet indicating the pressure drop across the flow indicators.

4.6 Refer to Attachment 7.4 for the actual calculation and results.

5.0 RESULTS:

Ring headers: at normal flow the setpoint is 1.1 psig, at maximum flow the setpoint is 1.2 psig. considering the max setpoint at 80% of the PCV range – the range is 0 to 1.5 psig.

Aeration pads: at normal flow the setpoint is 1.4 psig, at maximum flow the setpoint is 2.7 psig. considering the max setpoint at 80% of the PCV range – the range is 0 to 3.4 psig.

6.0 SUMMARY OF CONCLUSIONS:

Ring headers: setpoint = 1.1 psig or 30” W.C., range is 0 to 1.5 psig or 0 to 40” W.C.

Aeration pads: setpoint 1.4 psig or 38” W.C., range is 0 to 3.4 psig or 0 to 90” W.C.

7.0 ATTACHMENTS:

7.1 Jenike & Johanson, Improving the Handling of Fly Ash at Saltstone Plant, November 2005. (67 sheets)

7.2 Sketch: Section of the aeration piping being evaluated (1 sheet)

7.3 Flow Indicator Cut Sheet (1 sheet)

7.4 Calculation (12 sheets)

JENIKE & JOHANSON
INCORPORATED
Bulk Solids: Science/Engineering/Design

Improving the Handling of Fly Ash at Saltstone Plant

Prepared by: Eric Bengtson
Reviewed by: John W. Carson, Ph. D.

Westinghouse Savannah River Corporation
5164-2

©2005

3485 Empresa Drive • San Luis Obispo, CA 93401-7328 • Tel: (805) 541-0901 • FAX: (805) 541-4680
Also: Westford, MA • Toronto, Canada • Viña del Mar, Chile
www.jenike.com

JENIKE & JOHANSON

November 28, 2005

Improving the Handling of Fly Ash at Saltstone Plant

Westinghouse Savannah River Corporation
5164-2

1 BACKGROUND

At Westinghouse Savannah River Company's (WSRC) Saltstone plant, fly ash is mixed with cement and slag to form grout for concrete casks used to store low-level radioactive waste. Discharge problems have been experienced for some time with removal of fly ash from silos, but recently these problems have become much more severe.

Jenike & Johanson, Inc. (J&J) was asked to have an engineer visit the plant to inspect the equipment, discuss the problems with plant personnel, and develop a path forward that can be implemented as quickly as possible. Accordingly, Dr. John Carson of J&J visited the plant on October 24, 2005. His trip report and proposal are contained in J&J Report 5164-1, dated October 26, 2005. Flow properties testing and fluidizing handling testing were recommended to determine a solution to the problem and to assess whether fluidized handling would be feasible for the current fly ash.

Samples labeled as Boral Class F fly ash were received from Boral Material Technologies in Belews Creek, North Carolina for testing. Tests were conducted to measure flow properties and characterize the material's fluidization properties. This report discusses the results of those tests and provides design recommendations utilizing fluidized handling.

2 FLOW PROPERTIES

A sample of Boral Class F fly ash was received for testing. Tests were run on the sample at its as-received moisture content[1] of 0.07%.

These tests were run to determine the particle size of the material, its cohesive strength (used for critical arching and ratholing dimensions), wall friction angles (used for calculating mass flow hopper angles), permeability (used to determine critical steady-state discharge rates), and the bulk density/consolidating pressure relationship. Cohesive strength and wall friction tests were run for continuous flow conditions and for flow after seven days storage at rest at room temperature (72° F).

Highlights of the test results are discussed below. The complete test results, which are included in Appendix 1, should be used for design purposes.

---

[1] The moisture value was determined by drying small samples at 107°C for two hours in a forced convection oven. The loss in weight of each sample, divided by its original weight before drying, is denoted as the *moisture*.

JENIKE & JOHANSON

Particle size

A particle size distribution was determined for the material, using laser diffraction[2].

Tests were conducted using feed pressures of 0.5 bar and 3.0 bar. Note that the higher tested feed pressure may result in the breakup of agglomerates, the removal of fine particles that were loosely bound to coarse particles, or the attrition of weak particles.

The average of three runs is shown in the accompanying plots in Appendix 1. The calculated d(0.1), d(0.5), and d(0.9) sizes[3] are given in the following table.

Material	*d(0.1), μ*	*d(0.5), μ*	*d(0.9), μ*
Fly ash at 0.5 bar	7.6	34.4	106.3
Fly ash at 3.0 bar	5.7	25.6	84.9

Cohesive strength tests (arching and ratholing dimensions)

This material is cohesive and has the ability to form a stable rathole if stored in a funnel flow silo. In addition to this "no flow" problem, funnel flow can cause erratic flow, exacerbate segregation, reduce the live capacity of the silo, allow particle degradation (e.g., caking) in stagnant regions, and induce high loads (depending on silo size) on the structure and downstream equipment due to collapsing ratholes and eccentric flow channels. Fine powders such as this material will flood if the rathole collapses or fresh material is added to the silo.

The material should therefore be handled in a mass flow silo, which provides a first-in-first-out flow sequence, eliminates ratholes and the accompanying stagnant material, and minimizes segregation effects. One of the requirements for achieving mass flow is to size the outlet large enough to prevent arching. (Additional requirements, such as ensuring that the hopper walls are steep enough and sufficiently low in friction, are discussed later.)

On a continuous flow basis, the tests show no minimum outlet dimensions are required to prevent cohesive arching in a mass flow or funnel flow silo; hence, outlet sizes should be based on other considerations such as flow rate requirements or feeder configurations. However, if this material is allowed to remain at rest in a silo for a period of seven days, the minimum outlet diameter required to prevent a stable arch from forming in a mass flow silo is 5.2 ft. If a wedge or a transition hopper is used with a slotted outlet, the minimum required width of the slot is 2.6 ft., provided the outlet length is at least three times its width.

---

[2] The equipment used was a Malvern Mastersizer 2000 with a Scirocco dry dispersion feed unit. There are other manufacturers' analyzers that use laser light diffraction, but the data processing is unique to each unit and thus a one-to-one comparison of data should not be expected.

[3] The terms d(0.1), d(0.5), and d(0.9) refer to the particle sizes at which 10%, 50%, and 90% of the sample is smaller, respectively. The value for d(0.5) is also referred to as the *mass median diameter*.

JENIKE & JOHANSON

If a 25% overpressure (P-FACTOR= 1.25) is applied to the material, due, for example, to vibration or impact upon loading, the minimum outlet diameter required to prevent a stable arch from forming in a mass flow silo increases to 8 ft. Thus, this material should be handled gently to avoid any overpressure.

Compressibility test (bulk density as a function of consolidating pressure)

The bulk density of most bulk solids varies with consolidating pressure. Consideration must be given to using the proper value for such calculations as silo loads, silo capacities, and feed density.

Bulk density values measured in our lab ranged from a minimum (unconsolidated) density of 63 pcf to 77 pcf over a range of consolidating pressures.

Note that density values can vary significantly if the particle size of the actual material to be handled is different than tested. Also note that lower densities are possible if fine materials are fluidized or aerated.

Wall friction tests (mass flow angles)

In addition to a properly sized outlet, the design of a mass flow silo must consider the hopper wall angles, materials of construction, and surface finish. The hopper walls must be steep enough and have sufficiently low friction to allow the material to flow along them. Wall friction angles were determined on the wall materials listed in the following table. As an example of the test results, if a conical hopper with a 6 ft. dia. opening were lined or fabricated using the listed wall materials, the corresponding wall angles would be the maximum recommended for mass flow to occur.[4]

Wall Materials	*Maximum recommended mass flow wall angles*[5] *(from vertical)*	
	Continuous flow	7 days storage at rest
304 #2B Finish Stainless Steel Sheet[6]	27°	24°
TIVAR® 88[7]	21°	21°
Mild Carbon Steel Plate, Aged[8]	12°	NT[9]

[4] Hoppers with elongated outlets require significantly less steep angles than conical hoppers (typically 10° to 12° less steep). Critical angles for such hoppers are given later in this report.

[5] The maximum recommended wall angle may vary, depending on outlet size. The angles specified here apply only for the given outlet size, which may not be applicable due to arching dimensions of the material. The maximum recommended wall angles should be selected from the appropriate table in this report, based on the actual outlet size for a given design.

[6] This surface is a cold rolled mill finish that cannot be achieved by polishing. It is also important to note that sheet thickness material was tested. Plate thickness, less commonly available, should not be substituted unless tests are conducted to confirm that it is suitable.

[7] Ultra high molecular weight (UHMW) polyethylene manufactured by Poly-Hi Solidur of Fort Wayne, Indiana.

[8] Aged carbon steel plate with light rust.

[9] Not tested.

JENIKE & JOHANSON

Permeability test (limiting flow rates)

An outlet must be sized not only to prevent arching, but also to achieve the required discharge rate. Fine powders often exhibit a rate limitation not experienced with coarse materials that readily allow air to pass through them.

A permeability test was run to determine critical steady-state discharge rates. As an example of the test results, if a mass flow cone with a 6 ft. diameter outlet were used with a cylinder containing a 20 ft. effective head of fully deaerated material, the critical discharge rate would be approximately 27 tons per hour.

3 FLUIDIZATION CHARACTERISTICS

Bulk density and pressure gradient as a function of superficial gas velocity were measured in an 8 in. diameter test column. A diagram of the test setup is shown in Figure 1.

Test procedure

The test column was filled approximately 28 in. deep with a measured weight of material, and gas flow was started. Gas flow was increased in stages, allowing flow, pressure, and height to stabilize after each increase. Pressures, column height, and gas flow rate were acquired for each equilibrium condition by a data acquisition (DAQ) system. Pressure was measured between three taps spaced 12 in. apart on the column. Column height was measured by manually adjusting a distance transducer to the material top surface. Gas flow was increased until the pressure differential between the two taps remained constant for several readings. Gas flow was then reduced in stages until gas flow was stopped.

Test results

For materials that fluidize uniformly, pressure drop first increases with increasing gas velocity, reaches a peak, then decreases and eventually levels off. The condition where pressure drop does not change with increased gas flow indicates a fluidized state, and the gas velocity at which this occurs is referred to as the complete fluidization velocity, U_{cf}. In materials that do not fluidize completely, the pressure drop may never reach a steady level, but continue to change as the gas velocity is varied. As shown in Figure 2, the pressure drop leveled off for many sample periods, indicating that a fluidized state was reached for this fly ash.

As the pressure increased at the beginning of the test the deaerated material in the column lifted as a slug approximately 1/2 to 1 inch; the material above the bubble formed by the lift failed quickly and the column transitioned to fluidized with little bypassing or channeling. Once expanded and fluidized, bubbles were small and uniform and slugging did not occur. As gas velocity decreased the fly ash contracted to a contact bed state over a relatively narrow velocity range.

Minimum fluidization velocity, U_{mf}, refers to the point of incipient fluidization. It is defined as the intersection of the two parts of the pressure curve, i.e., the line of constant pressure drop

corresponding to complete fluidization, and the line of changing pressure drop in a static contact bed, as shown in Figure 2. Note that there is a difference in the slope of the changing pressure drop portion of the curve between gas flow increasing and decreasing. The slope of the increasing flow portion is often influenced by initial fill conditions; therefore, the decreasing flow portion is used in determining U_{mf}.

Figure 2 also shows bulk density as a function of superficial gas velocity. Bulk density was calculated using the measured height of material in the column and dividing the calculated volume into the known weight of material in the column. In the fluidized region, the bulk density can also be estimated from the pressure gradient as dP/h ~ gamma, where dP is the pressure drop, h is the height over which the pressure drop occurs, and gamma is the bulk density.

Key values are summarized in the following table. All gas velocities in this report are given as superficial gas velocities.

Fluidization Values					
Material	**Minimum fluidization velocity U_{mf}, ft/min**	**Complete fluidization velocity U_{cf}, ft/min**	**Deaerated bulk density, pcf**	**Fluidized bulk density, pcf**	**Pressure drop over 1 ft. at U_{cf}, psi**
Boral Class F fly ash	0.83	1.35	78	50	0.38

Conclusions

The test indicates that the Boral Class F fly ash can be fluidized uniformly and is a good candidate for both gas-assisted and fluidized handling.

Variables affecting fluidization behavior

Fluidization velocities are a function of gas properties such as density, viscosity, and temperature.

Two properties in the relationship, density and viscosity, are affected by gas temperature. The effect of changes in gas density on fluidization velocity generally can be neglected. However, the effect of change in viscosity, which for gases generally increases with increased temperature, can be significant.

4 DISCHARGE TESTS

Gas-assisted discharge and fluidized discharge

Gas injection through a distribution membrane for the purpose of discharging material from a silo or hopper commonly results in one of two discharge modes. Both discharge modes can use identical fluidization equipment with minor variations in setup. The primary differences are in the type of outlet valve, method of operation, silo geometry, and plenum pressure.

JENIKE & JOHANSON

Gas-assisted discharge utilizes a fully open outlet with flow restricted by only the outlet size, fluid conditions in the discharging material, and bulk properties of the discharging material. Most or all of the injected gas is discharged with the material, except at low silo levels. Because the gas exits through the outlet and not the top of the silo, the majority of silo content remains deaerated. A plenum pressure is chosen which is insufficient for fluidization at normal operating silo levels but will provide the necessary pressure gradient to entrain and discharge material when the outlet valve is open. Discharge rates are typically relatively high and imprecise, and are generally not suitable for applications requiring accurate metering. Examples of typical applications are truck, railcar, or bulk bag loadout stations, and quick demand feed of downstream batch operations. Gas-assisted discharge is used primarily with larger silos, but can be used on small silos.

Fluidization discharge controls flow rate from a fully fluidized silo by use of a feeder, usually a rotary valve. Almost all of the fluidizing gas travels upward through the material, fluidizing it. A sufficient plenum pressure is chosen to achieve minimum fluidization velocity at the highest design level of the silo. Fluidization discharge is used when the required flow rates are relatively low and need to be well controlled. Poorly fluidizing materials are typically unsuitable for fluidization discharge. Fluidized discharge silos are limited in size by the pressures created by the fully fluidized silo. Fluidized discharge systems are normally designed with cylindrical silos to achieve a constant average upward gas velocity at any given level in the silo.

Both gas-assisted discharge and fluidization discharge require a high maximum flow and constant low-pressure gas supply. Depending on the application, the gas flow requirement may be continuous or only for a short period of time prior to discharge and during discharge. A typical regulator for either type of application is normally specified to provide the design pressure, typically a value between 0.5 and 5 psi depending on application, at zero flow, and provide 90 to 95% of full design pressure up to 90% of a relatively high limiting flow rate, and then operate as a choked flow device. This performance profile fits well with the requirements for either gas-assisted or fluidizing discharge. With high material levels, less gas flow and higher plenum pressure are required to provide reliable discharge, while at low material levels less pressure and more flow are required for fluidization and clean-off. The regulator should be sized to "choke" or limit flow, at approximately one to three times the minimum fluidization velocity, with the specific flow rate chosen based on test results, material characteristics, and process requirements.

Test setup

The test rig is shown in Figure 3. It consists of a 22 in. diameter stainless steel cylinder clamped onto a 25° from horizontal fluidization cone. The cone medium is a needled polyester fabric. Material is discharged through a 1-7/8 in. diameter outlet with a 2 in. full port ball valve attached below. Gas flow, plenum pressure, discharge rate, and rig weight were recorded by a data acquisition system for all tests. Raw data was imported into a spreadsheet to generate a plot of test parameters. Each data acquisition session was given a unique identification number. A test log and data plots for each test are in Appendix 2.

JENIKE & JOHANSON

Test results

In addition to fluidization characterization tests, seven tests were run to determine the ability of this fly ash to discharge after deaeration, required gas flow rates and plenum pressure, and discharge rates. These tests were run on the sample at its as-received condition at room temperature. The following table summarizes the tests run.

Summary of Tests Run

Test ID	Plenum pressure, psi	Nominal discharge rate, lb/min	Gas flow, SCFM/ ft^2	Description
T01	-	-	-	See Fluidization Characteristics section of this report.
T02	0 0.29	85 227	0 0 to 0.5, 0.18 average	Prior to discharge a 1.6 psi vacuum was applied to the discharger plenum for approx. 10 min. Discharge with no plenum pressure indicates material not fully deaerated prior to discharge.
T03	0 0.24	0 229	0 0.64 max to 0.2 at equilibrium	Material deaerated by applying vacuum to plenum and 420 psf to top surface for approx. 19 hours prior to discharge.
T04	0 0.5	210 430	1.28 max, 0.98 at equilibrium	No vacuum or top pressure applied prior to discharge – material recirculated and discharged after 1/2 hour at rest.
T05	0 0.54	0 425	1.76 to 1.9, decreasing to 1.6 at end of test	Material deaerated per T03 for approx. 1-1/2 hour.
T06	0 0.9	0 470	3.7 average	Material deaerated per T03 for approx. 1-1/4 hour.
T07	0 0.25	84 365	0.7 average	Material deaerated per T03 for 1/2 hour, then stored at rest with 420 psf top surface consolidation and plenum vented to atm. for 6 days prior to discharge. Initial valve open with no plenum pressure produced steady flow at 84 lb/min. Pressurization at 0.26 psi caused rate to increase to steady value of 365 lb/min.

The minimum pressure required to initiate discharge depended on whether the fly ash had deaerated or not. If not deaerated and compacted, material discharged with no applied plenum pressure. If allowed to deaerate and stored for some period of time under a compaction load, the fly ash discharged reliably with 1/4 psi, which was the lowest test value used. The requirement to achieve discharge appeared to depend on the state of compaction, and not on how long the material had been

stored in that state. Higher pressures of 0.5 and 0.9 psi increased the discharge rate but the increase from 1/2 psi up to 0.9 psi was marginal.

Gas flow rates varied during the tests. Tests T02 and T03, both at 1/4 psi plenum pressure but with different pre-test deaeration, achieved approximately the same gas flow rate of 0.2 scfm/sq. ft. at the end of the tests, and as the process equilibrated. Higher plenum pressures equated to higher gas flows.

The highest gas flow rates occurred when the material head was low and material fluidized, achieving very good clean-off of the membrane during emptying of the test rig at the end of test T07.

Conclusions

We conclude from these tests, as well as from our experience with similar applications, that this material is capable of discharging from the existing equipment at rates exceeding those needed to meet batch fill requirements. Flow rates of fluidized dischargers scale based on outlet area and pressure differential. The discharger used for testing has an outlet diameter of 1.875 inches. Scaling the 230 lb/min. discharge rate measured in T03, after 19 hrs. at rest with high consolidation, to the 12 in. silo outlet equates to approximately 9,000 lb/min. at the same plenum pressure.

5 ANALYSIS AND RECOMMENDATIONS

There are four identical silos arranged in a 2 x 2 matrix. As shown in CBI Services drawings for Contract No. 863011, each silo consists of a carbon steel cylinder section approximately 22 ft. in diameter, below which are two conical sections each having an angle of approximately 22° (from vertical). These are stainless steel plate construction and, according to the drawings, have an interior surface finish of 2B. There are two air permeation shelves within these cone sections. One is located near the bottom of the cylinder section starting 1 ft. above the top cone. The second is located just below the mid-point of the cone sections at the 14 ft. diameter level. The lower cone terminates at a 6 ft. diameter, below which is a Nol-Tec aeration cone which slopes at 40° from vertical. See Nol-Tec Systems Drawings D-1031A-10 and –39. This aeration cone terminates at a 12 in. diameter, below which is an approximately 3 ft. tall vertical section (including a slide gate valve) with a small chisel-shaped transition at the bottom interfacing with an air slide. The capacity of each silo is approximately 560 tons.

At present the silos are dedicated as follows:

Silo #1	Fly ash
Silo #2	Spare
Silo #3	Slag
Silo #4	Cement

Each of the individual components is discharged one at a time into a common weigh hopper in the proportions (by weight) of 45% fly ash, 45% slag, and 10% cement. Each 6,000 lb. batch is dropped into one of two Nol-Tec fluidizing blenders, after which the material is pneumatically conveyed to

JENIKE & JOHANSON

the premix feed silo, which discharges into a weigh hopper that meters material into the saltstone mixer.

The present design rate is 35 tph, which corresponds to one 6,000 lb. batch about every 5 minutes. There is a desire to increase the rate in the future to 50 tph by increasing the batch size to 8,500 lb. The batch cycle time would remain the same.

As can be seen from the Flow Properties Test Report in Appendix 1, this fly ash, once deaerated, has strong ratholing and arching tendencies. Therefore aeration is essential in order to provide discharge from the Nol-Tec cone. Furthermore, air must also be supplied to the upper permeation shelves to both "fluff up" the fly ash as well as provide the required feed rate into the Nol-Tec cone. In our opinion, the air flows currently being supplied are inadequate, and this is the reason for the flow problems being experienced.

Our functional design recommendations are described below.

Permeation shelves

The upper and mid-level aeration rings each consist of a single bustle pipe with six nozzles. Each level has its own rotameter that controls the air flow rate to 300 scfh (5 scfm)[10]. There is an air pressure gage in the air line just before each rotameter. According to plant personnel the pressure here typically reads between 10 to 15 psig. The control system turns the air flow on only when the slide gate valve is opened. During this time, the air flow is on for 3 seconds and then off for 10 seconds. This cycle is repeated as long as the discharge valve is open.

We recommend replacing the flow rate control device with a constant pressure device, maintaining a constant average pressure of 1/4 psi (7 in. H_2O) **in each bustle pipe** during and between discharge cycles. The pressure should be removed when the batching operation is shut down. The expected average gas flow rates are less than 1 scfm each at both permeation shelves. Some peaking of gas flow will occur during cycles, with a maximum flow of approximately 5 scfm.

Discharger operation

The Nol-Tec aeration hopper has a common header leading to four individual nozzles, each of which is located approximately 8 in. from the top of the cone. There is an individual gate valve next to the hopper at each of these four nozzles.

As with the air supply to the two permeation shelves, the Nol-Tec header has its own rotameter that controls the air flow rate to 300 scfh. Air flow is cycled on and off when the discharge valve is open as described above.

---

[10] The rotameter for the mid-level aeration ring goes from 0 to 900 scfh, but the line size for the air supply is the same as for the other two levels; therefore the maximum flow rate is limited to 300 scfh.

JENIKE & JOHANSON

We recommend that the primary plenum gas supply provide a no-flow pressure of 0.3 psig **in the Nol-Tec plenum**, maintain a pressure of 0.25 psig at 20 scfm, and provide a maximum (choked) flow of 100 scfm. Expected gas flow during discharge is approximately 10 to 30 scfm if levels in the silo are above the cylinder-cone transition. Plenum pressure should cycle on with the outlet valve opening and off with the valve closing. If discharge rates are excessive, the gas should be applied for only 10 seconds upon valve opening, and the amount of open time adjusted with operating experience to obtain a reasonable flow rate. If excessive discharge rates occur even with limited gas pressurization time, the plenum should be vented when not discharging, to allow partial deaeration of silo contents. Plenum gas should always turn off before the valve closes, and should always remain off when the valve is closed.

Fly ash in the silo is not intended to fluidize unless levels drop to within the fluidization cone.

Weigh hopper venting

According to Nol-Tec Drawing D-1031A-3, there is a dust filter at the top of the weigh hopper. It is essential that this filter be operable and allow full venting of the weigh hopper to prevent discharging from the silo into a pressurized environment. A pressure differential between the silo interior and the weigh hopper is the motive force for discharge from the silo. Any decrease in this differential will limit the silo discharge rate or prevent reliable discharge.

Air supply - general recommendations

Gas should be supplied by a pilot operated low-pressure regulator, such as a Fisher-Rosemont 299 series. Pilot operated regulators supply a reliably constant outlet pressure from shutoff conditions up to choking flow rates. Direct operating regulators, which are more commonly used in compressed air systems, provide an outlet pressure that varies considerably with flow rate, making them unsuitable for discharger service. Alternate gas supply methods include regenerative and lobed-type blowers, if supplied with suitable controls to maintain a constant pressure output over the required range of gas flow rates.

Gas supply to each permeation shelf and to the discharger plenum should be three independent systems.

When using regulators we recommend the control scheme shown in Figure 4, which consists of a step-down regulator[11], a low-pressure/high-flow regulator, a rotameter or flow transducer, and an overpressure relief valve or regulator. A pressure gauge should be connected directly to the membrane plenum to determine the conditions in the silo and to serve as an indicator of a plugged or damaged membrane.

---

[11] This regulator may not be needed if the maximum pressure of the gas supply is well below the allowable pressure for the flow rate control device, or if the flow rate control device is unaffected by anticipated gas supply pressure fluctuations.

The flow rate required to clean off a membrane is dependent on the degree of clean-off required, the discharger slope, fluidization characteristics of the bulk material, and fluidization membrane permeability.

Regardless of gas supply equipment, an independent overpressure protection device connected directly to the plenum should be used for safety reasons in all applications. If possible, instrumentation to measure both gas flow rate into the plenum as well as plenum pressure also should be installed. In addition, the silo should be evaluated for or equipped with a safety overpressure/vacuum relief device.

Miscellaneous

For safety, the silo roof should be vented and provided with overpressure protection rated at minimum for the pressure and flow capacity of the gas supply to the plenum.

A structural check should be performed to ensure that the modifications will not affect the integrity of the silo. A quote for such work will be provided upon request.

6 GENERAL COMMENTS

Mass flow conditions

In a mass flow silo, the hopper section must be sufficiently steep and low enough in friction to cause all the material to flow, without stagnant regions, whenever any material is withdrawn. Saying that "all the material is flowing" does not imply or require that all the particles are flowing at the same velocity. This is particularly true of particles that are in the converging hopper section. Material flows more slowly at the walls than at the centerline of the hopper, due to friction with the walls. This effect becomes visibly apparent when the material level is just above or within the hopper. It also becomes more pronounced here because of the lack of head pressure.

In some cases, such a velocity differential may be beneficial (e.g., for in-silo blending). In other applications, a uniform velocity may be required to minimize particle segregation effects, enforce uniform residence time, or provide a well defined transition from one material to another. It is essential that the design engineer be aware of any such requirements, and that they be properly taken into account when designing a silo.

In addition to a proper design for a mass flow silo, the quality of construction is critical. Protrusions into the flow channel caused by horizontal welds, incorrectly lapped liner plates, or poorly constructed mating flanges will prevent mass flow. Similarly, poor quality surface finish caused by weld spatter, poor quality workmanship, or simply not using the liner material specified may prevent mass flow.

Conditions below the outlet are just as important as the hopper design. Gates must allow the bulk solid to flow uniformly, and feeders must withdraw the bulk solid from the entire outlet area.

JENIKE & JOHANSON

It is imperative that the fabricator be made aware of both the design intent and the need for good quality workmanship. In addition, the engineer should carefully inspect the fabrication of the hopper and feeder.

Interior surface finish. Whenever possible, welding should be done on the outside of the hopper. If interior welding is necessary, all welds on sloping surfaces must be ground flush and power brushed to retain a smooth surface. After welding, all sloping surfaces must be clean and free of weld spatter.

The surface finish is most critical in the region of the hopper outlet; therefore, any blisters from exterior welding in this area must be brushed smooth. Horizontal or diagonal welded connections should preferably be lapped with the upper section on the inside so that the resulting ledge does not impede flow. If horizontal butt welds are used, care must be taken to avoid any protrusion into the flowing solid. Vertical welds coinciding with the direction of material flow should preferably be butted, then ground flush and power brushed as noted above.

Mating flanges. The lower of two mating flanges must be oversized to prevent any protrusions into the flowing solid. The amount of oversize depends on the accuracy of the construction and erection; usually one inch overall is sufficient.

All flanges should be attached to the outside of the hopper, with the hopper wall material being the surface in contact with the flowing solids. This ensures that the flange does not protrude into the flowing solids.

Feeder or gate below hopper. A feeder, a cutoff gate, or both may be used below the hopper outlet. The key to feeder and gate design is to provide uniform withdrawal of the bulk solid from the entire area of the outlet.

If a gate is used below a mass flow hopper, the gate must be either fully open or fully closed. A partially opened gate creates a flow obstruction and will convert what would otherwise be a mass flow design into funnel flow.

Poke holes and access doors

In general, poke holes are not recommended in mass flow silo designs, as they have a tendency to prevent flow along the walls, thus creating a problem that mass flow silos are intended to solve.

Access doors are also a frequent cause of problems. If they are essential, it is better to locate them in a vertical, cylindrical section rather than in the hopper section.

Stainless steel

Stainless steel plate and sheet can be obtained in a variety of surface finishes. Generally, a given finish is smoother for sheet thicknesses (10 ga or thinner) than for plate thicknesses (3/16 in. or thicker). Some finishes—such as 2B—may be available only in sheet thicknesses. Unless otherwise

specified, all recommendations in this report concerning the use of stainless steel are based on a surface finish normally associated with sheet thickness material in contact with the bulk solid.

Warning

These recommendations are based upon samples and information provided by WSRC, and upon expected operating conditions as described by WSRC. We assume that the information furnished by WSRC is accurate and complete, that the samples and expected operating conditions are representative of those which will exist in the completed facility, and that WSRC will carry out routine tests and maintenance during periods of operation in accordance with prudent industrial practice.

Bulk materials of inferior flowability (e.g., more cohesive, with larger critical arching and ratholing dimensions, or more frictional, requiring steeper wall angles) should not be placed in the silo since erratic flow or flow obstructions are then likely to occur.

This may lead to the development of voids within the silo and impose dynamic loads when material collapses into the voids. In addition to problems associated with process stoppages, such conditions can create severe safety hazards and structural failures.

If the silo is to store material whose properties may vary over a wide range of flowability and density, we recommend that WSRC routinely test the flow properties and bulk density of the material prior to placing it in the silo in order to avoid such problems.

Mass flow in silos may cause unusually high localized loads at the transition between the vertical section and the mass flow hopper. In using mass flow designs or converting an existing silo to mass flow, the structure must be checked to be sure it is sufficiently strong to withstand these loads.

Follow-on services

Prefabrication drawing review. We strongly recommend that we review, before fabrication, any detail drawings resulting from our recommendations. This review will ensure that the design follows our recommendations and that any design details or changes are consistent with reliable material flow.

Only those aspects of the design that affect material flow will be addressed. Review of structural or mechanical details or calculations is not included.

There will be no fee for this review if our recommendations are closely followed; however, if substantial changes are made and redesign is necessary, the client will be notified of this and we will provide a quotation for this work.

Bulk solids training. Proper training of personnel involved in solids handling and processing is essential to operating an efficient and reliable bulk solids handling system. Since the theory of bulk solids handling is seldom a part of formal engineering training, many in industry lack an

JENIKE & JOHANSON

understanding of why solids handling problems occur and what practical steps can be taken to diagnose, alleviate, or prevent them.

As the leader in this field, Jenike & Johanson provides training for engineers, operators, scientists, formulators, and other personnel on the key elements of bulk solids handling theory and their application to common industrial problems. Training helps to foster greater awareness of operating efficiency, safety, and process improvement, along with an understanding of the reasoning behind our recommendations. Presenting this training at your facility enables us to focus on your company's bulk solids and flow-related concerns, and to discuss related issues in confidence.

Further details about our courses are available from a Jenike & Johanson engineer and also can be found at www.jenike.com.

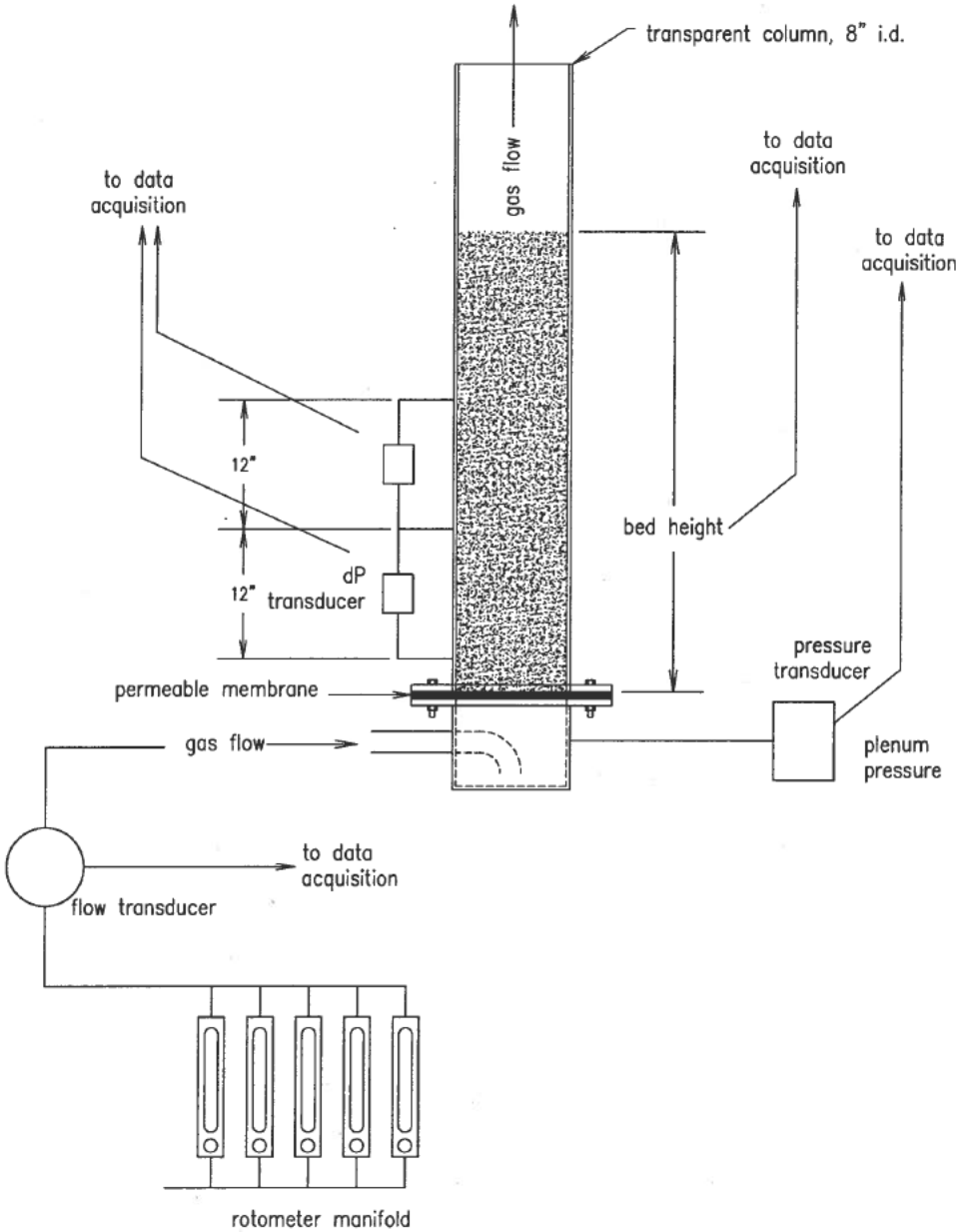

Figure 1 – Fluidization Characteristics Test Rig

November 28, 2005

5164–2

Bulk Solids: Science/Engineering/Design

JENIKE & JOHANSON

JENIKE & JOHANSON

5164-2

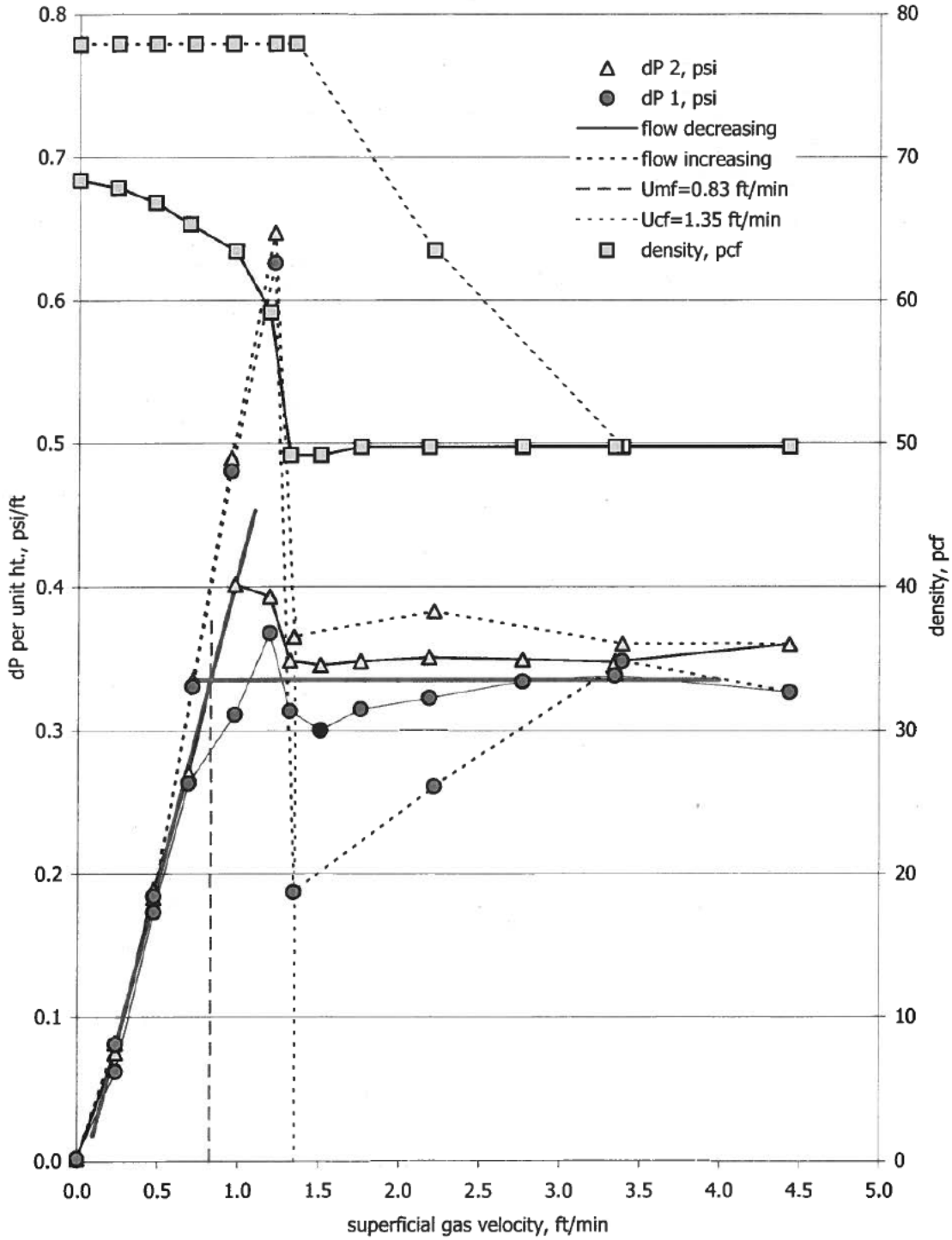

FIgure 2 - Fluidization Characteristics of Boral Class F Flyash

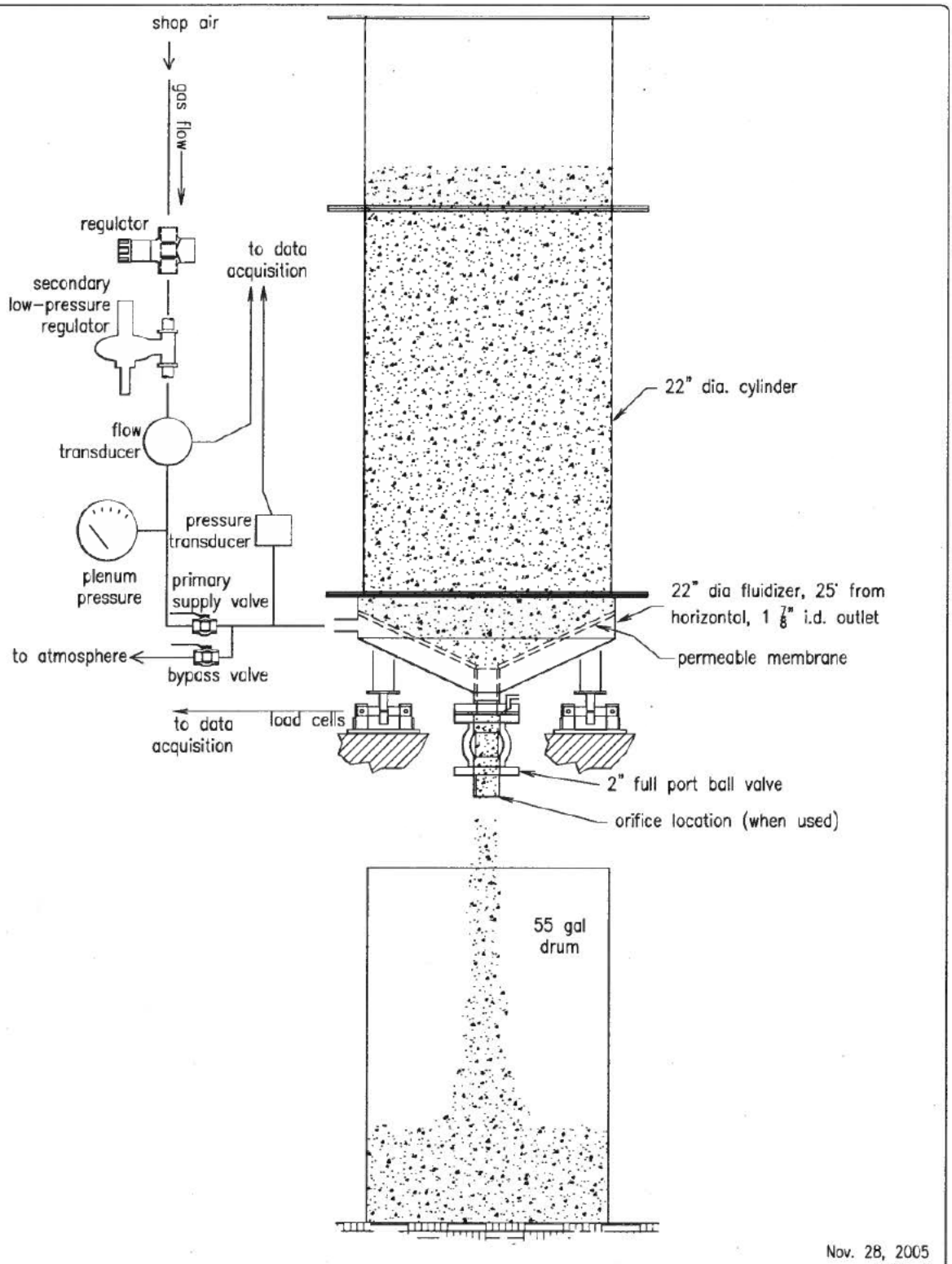

Nov. 28, 2005
5164-2

Fig. 3 Gas-Assisted Discharge Test Rig

Notes:

1. See text for gas flow rates and pressures.

2. High pressure supply to low pressure regulators may be common. Flowmeters may be relocated between low and high pressure regulators as long as they do not limit pressure or flowrate.

3. Piping shall be sized to not limit flow rates or plenum pressures.

4. Manual or solenoid valve (10) shall be capable of suppliying pressure to each plenum quadrant individually. For normal conditions all quadrants are pressurized equally.

Gas Supply Components	
Item #	Description
1	Relief valve
2	Low presure regulator
3	Line pressure regulator
4	Flow meter
5	Pressure gage, 0–1 psi
6	Pressure gage, 0–60 psi
7	Pressure gage, 0–120 psi
8	On/Off supply control valve
9	Isolation valve
10	Quadrant isolation valve

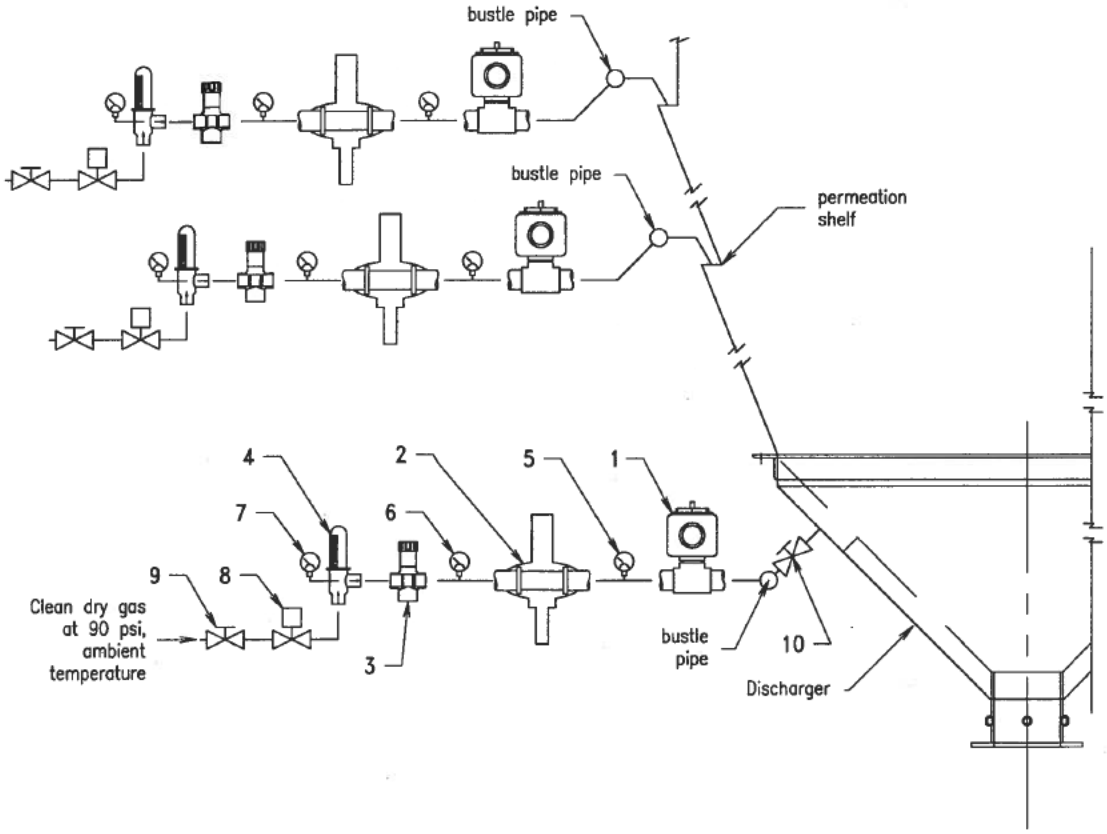

Figure 4 – Gas Supply Schematic

11/28/05
5164–2

JENIKE & JOHANSON

APPENDIX 1

Flow Properties Test Data

5164-2

JENIKE & JOHANSON

5164-2

SUMMARY OF TESTS PERFORMED

This report presents various flow property test results as indicated for the following material(s) :

BULK MATERIAL	MATERIAL ID #	DESCRIPTION	PARTICLE SIZE	MOISTURE CONTENT
1	24342	Boral Class F Flyash	As Rec'd	0.07%

BULK MATERIAL	TIME hr	TEMPERATURE deg F	PAR.SIZE ANALYSIS	BIN DIM	BULK DENSITY	HOPPER ANGLES	CHUTE ANGLES	FLOW RATE	OTHER
1	0.0	72	X	X	X	X		X	X
	162.0	72		X		X			

JENIKE & JOHANSON

5164-2

BULK MATERIAL 1: Boral Class F Flyash

PARTICLE SIZE As Rec'd

MOISTURE CONTENT 0.07%

SECTION I. BIN DIMENSIONS FOR DEPENDABLE FLOW

Storage Time at Rest 0.0 hrs
Temperature 72 deg F

PART A. BINS WITH UNLIMITED MAXIMUM SIZE

Optimum Mass Flow Dimensions

P-Factor	BC feet	BP feet
1.00	0.*	0.*
1.25	0.*	0.*
1.50	0.*	0.*
2.00	0.*	0.*

Funnel Flow Dimensions

P-Factor	BF (feet)	EH=	1.0	2.5	5	10	20	27 feet
			Critical Rathole Diameters, DF (feet)					
1.00	0.*		0.5	1.1	1.9	3.1	4.4	5.0
1.25	0.*		0.6	1.3	2.3	3.5	4.8	5
1.50	0.*		0.7	1.5	2.6	3.9	5	6
2.00	0.*		0.9	1.9	3.1	4.4	6	6

0.* Indicates that no minimum dimensions are given by the tests. Instead, the outlet size should be selected by consideration of particle interlocking, flow rate, etc.

TERMS

P-FACTOR = overpressure factor
BC = recommended minimum outlet diameter, conical hopper
BP = recommended minimum outlet width, slotted or oval outlet
BF = minimum width of rectangular outlet in a funnel flow bin
EH = effective consolidating head

For detailed explanations of terms see appendix pages A5, A6, and A7.

JENIKE & JOHANSON

5164-2

BULK MATERIAL 1: Boral Class F Flyash

PARTICLE SIZE As Rec'd

MOISTURE CONTENT 0.07%

Storage Time at Rest 162.0 hrs
Temperature 72 deg F

PART A. BINS WITH UNLIMITED MAXIMUM SIZE

Optimum Mass Flow Dimensions

P-Factor	BC feet	BP feet
1.00	5.2	2.6
1.25	8.1	4.1
1.50	10.7	5.4
2.00	14.2	7.1

Funnel Flow Dimensions

P-Factor	BF (feet)	EH=	1.0	2.5	5	10	20	27 feet
			Critical Rathole Diameters, DF (feet)					
1.00	2.8		2.8	4.9	8	12	17	19
1.25	4.3		3.2	6	9	14	19	21
1.50	5.5		3.5	6	10	15	20	22
2.00	7.2		4.2	8	12	17	22	24

TERMS

P-FACTOR = overpressure factor
BC = recommended minimum outlet diameter, conical hopper
BP = recommended minimum outlet width, slotted or oval outlet
BF = minimum width of rectangular outlet in a funnel flow bin
EH = effective consolidating head

For detailed explanations of terms see appendix pages A5, A6, and A7.

JENIKE & JOHANSON

5164-2

BULK MATERIAL 1: Boral Class F Flyash

PARTICLE SIZE As Rec'd

MOISTURE CONTENT 0.07%

SECTION II. SOLIDS DENSITY

TEMPERATURE 72 deg F

BULK DENSITY
The bulk density, GAMMA, is a function of the major consolidating pressure, SIGMA1, expressed in terms of effective head, EH.

EH (feet)	0.5	1.0	2.5	5.0	10.0	20.0	40.0	80.0
SIGMA1 (psf)	34.	71.	181.	370.	752.	1529.	3108.	6316.
GAMMA (pcf)	68.0	70.5	72.5	73.9	75.2	76.5	77.7	78.9

COMPRESSIBILITY PARAMETERS

Bulk density, GAMMA, is a function of the major consolidating pressure SIGMA1, as follows:

For SIGMA1(I-1) < SIGMA1 < SIGMA1(I) :

$$GAMMA = MAX\ [GAMMA(I)\ (SIGMA1/SIGMA1(I))^{BETA(I)}, GAMMAM]$$

Minimum bulk density GAMMAM = 62.6 pcf

I	SIGMA1(I) psf	GAMMA(I) pcf	BETA(I)
1	14.1	66.1	0.02766
2	43.2	68.5	0.03179
3	64.8	70.3	0.06440
4	102.0	71.4	0.03220
5	177.7	72.5	0.02794
6	307.9	73.6	0.02718
7	425.3	74.2	0.02396
8	601.9	74.7	0.02300
9	837.5	75.4	0.02553
10	1191.4	76.0	0.02413
11	1484.1	76.4	0.02269
12	1777.3	76.7	0.02421
13	2072.2	77.0	0.02141
14	2364.4	77.2	0.02254

JENIKE & JOHANSON

5164-2

BULK MATERIAL 1: Boral Class F Flyash

PARTICLE SIZE As Rec'd

MOISTURE CONTENT 0.07%

SECTION III. MAXIMUM HOPPER ANGLES FOR MASS FLOW

WALL MATERIAL: 304 #2B Finish Stainless Steel Sheet
STORAGE TIME AT REST 0.0 hrs
TEMPERATURE 72 deg F

HOPPER ANGLES FOR VARIOUS HOPPER SPANS

Dia of Cone (feet)	0.27	0.50	1.00	2.00	4.00	8.00	9.54
Width of Oval (feet)	0.14	0.26	0.50	0.99	1.95	3.85	4.58
SIGMA (psf)	7.4	15.4	34.	77.	165.	343.	412.
SIGMA1 (psf)	9.2	19.6	43.	95.	194.	393.	470.
Wall Friction Angle PHI-PRIME (deg)	26.	25.	24.	22.	19.	18.	17.
Hopper Angles THETA-P (deg)	26.	27.	30.	33.	36.	38.	39.
THETA-C (deg)	15.	16.	18.	21.	25.	28.	28.

WALL MATERIAL: 304 #2B Finish Stainless Steel Sheet
STORAGE TIME AT REST 162.0 hr
TEMPERATURE 72 deg F

HOPPER ANGLES FOR VARIOUS HOPPER SPANS

Dia of Cone (feet)	0.66	1.00	2.00	4.00	6.67
Width of Oval (feet)	0.34	0.50	0.99	1.96	3.24
SIGMA (psf)	20.4	33.7	76.	163.	281.
SIGMA1 (psf)	27.9	44.0	95.	197.	331.
Wall Friction Angle PHI-PRIME (deg)	28.	25.	22.	21.	19.
Hopper Angles THETA-P (deg)	24.	28.	31.	34.	36.
THETA-C (deg)	13.	16.	20.	23.	25.

JENIKE & JOHANSON

5164-2

BULK MATERIAL 1: Boral Class F Flyash

PARTICLE SIZE As Rec'd

MOISTURE CONTENT 0.07%

WALL MATERIAL: Tivar 88
STORAGE TIME AT REST 0.0 hrs
TEMPERATURE 72 deg F

HOPPER ANGLES FOR VARIOUS HOPPER SPANS

Dia of Cone (feet)	0.27	0.50	1.00	2.00	4.00	8.00	9.75
Width of Oval (feet)	0.15	0.26	0.50	0.99	1.96	3.90	4.74
SIGMA (psf)	7.4	15.3	34.	75.	160.	334.	412.
SIGMA1 (psf)	9.5	19.7	44.	96.	200.	406.	497.
Wall Friction Angle PHI-PRIME (deg)	27.	26.	24.	23.	22.	21.	20.
Hopper Angles THETA-P (deg)	24.	26.	28.	30.	32.	34.	34.
THETA-C (deg)	13.	15.	17.	18.	20.	22.	23.

WALL MATERIAL: Tivar 88
STORAGE TIME AT REST 162.0 hr
TEMPERATURE 72 deg F

HOPPER ANGLES FOR VARIOUS HOPPER SPANS

Dia of Cone (feet)	0.65	1.00	2.00	4.00	6.78
Width of Oval (feet)	0.33	0.50	0.99	1.97	3.31
SIGMA (psf)	20.4	33.7	75.	159.	281.
SIGMA1 (psf)	26.9	44.0	97.	200.	343.
Wall Friction Angle PHI-PRIME (deg)	26.	25.	24.	22.	21.
Hopper Angles THETA-P (deg)	26.	28.	29.	31.	33.
THETA-C (deg)	15.	16.	18.	20.	22.

JENIKE & JOHANSON

5164-2

BULK MATERIAL 1: Boral Class F Flyash

PARTICLE SIZE As Rec'd

MOISTURE CONTENT 0.07%

WALL MATERIAL: Mild Carbon Steel Plate, Aged
STORAGE TIME AT REST 0.0 hrs
TEMPERATURE 72 deg F

HOPPER ANGLES FOR VARIOUS HOPPER SPANS

Dia of Cone (feet)	0.29	0.50	1.00	2.00	4.00	8.00	10.50
Width of Oval (feet)	0.16	0.26	0.51	1.01	1.99	3.95	5.18
SIGMA (psf)	7.4	13.9	31.	68.	146.	309.	412.
SIGMA1 (psf)	10.7	21.0	47.	102.	210.	427.	563.
Wall Friction Angle PHI-PRIME (deg)	32.	32.	31.	29.	27.	26.	26.
Hopper Angles THETA-P (deg)	18.	18.	19.	22.	24.	26.	27.
THETA-C (deg)	7.	7.	7.	8.	11.	13.	14.

JENIKE & JOHANSON

5164-2

BULK MATERIAL 1: Boral Class F Flyash

PARTICLE SIZE As Rec'd

MOISTURE CONTENT 0.07%

SECTION IV. CRITICAL STEADY SOLIDS FLOW RATES IN AIR

TEMPERATURE 72.0 deg F

CONICAL MASS FLOW HOPPER

Flow rate expressed in units of tons/hr.

BC	EH = 2.5 feet	5.0 feet	10.0 feet	20.0 feet	40.0 feet
0.25 feet	0.02	0.02	0.02	0.02	0.01
0.50 feet	0.20	0.17	0.15	0.13	0.12
0.75 feet	0.50	0.43	0.40	0.36	0.32
1.00 feet	0.97	0.85	0.76	0.68	0.63
2.00 feet	4.2	3.7	3.3	3.0	2.8
4.00 feet	17.	15.	14.	12.	11.
8.00 feet	73.	64.	57.	52.	48.

TRANSITION MASS FLOW HOPPER

Flow rate expressed in units of tons/hr per feet length of outlet.

BP	EH = 2.5 feet	5.0 feet	10.0 feet	20.0 feet	40.0 feet
0.25 feet	0.22	0.18	0.17	0.15	0.14
0.50 feet	0.59	0.50	0.47	0.41	0.38
0.75 feet	0.95	0.85	0.76	0.68	0.63
1.00 feet	1.3	1.1	1.0	0.95	0.88
2.00 feet	2.8	2.4	2.2	2.0	1.8
4.00 feet	5.8	5.0	4.5	4.1	3.8
8.00 feet	11.	10.	9.2	8.3	7.7

TERMS

BC = diameter of circular outlet
BP = width of slotted outlet
EH = effective consolidating head

JENIKE & JOHANSON

5164-2

BULK MATERIAL 1: Boral Class F Flyash

PARTICLE SIZE As Rec'd

MOISTURE CONTENT 0.07%

SECTION V. AIR PERMEABILITY TEST RESULTS

Temperature of test 68 deg F

K, the AIR permeability factor of the solid is defined from Darcy's law in the following form:

$$K = -u\ (GAMMA)\ /\ (dp/dx)$$

where:

u = superficial AIR velocity through the bed of solids

dp/dx = AIR pressure gradient across the bed

GAMMA = bulk density of the solid in the bed

K is a function of the bulk density of the solid

$$K = K0\ (GAMMA\ /\ GAMMA0)^{-a}$$

At room temperature, for GAMMA between 65.4 and 81.1 pcf:

K0 = 0.001264 ft/s

GAMMA0 = 66.0 pcf

a = 5.58

JENIKE & JOHANSON

5164-2

Particle Size Distribution Analysis

Sample Name:

Boral_Class_F_Flyash_Grab_0.5Bar_Avg

Jenike & Johanson ID: Supplier

Measured: Friday, November 04, 2005 10:43:44 AM

Notes: Average of 3 measurements from Flyash.mea

Vol. Weighted Mean D[4,3]:	**47.049**	um
Surface Weighted Mean D[3,2]:	**15.452**	um
d(0.1):	**7.583**	um
d(0.5):	**34.412**	um
d(0.9):	**106.284**	um

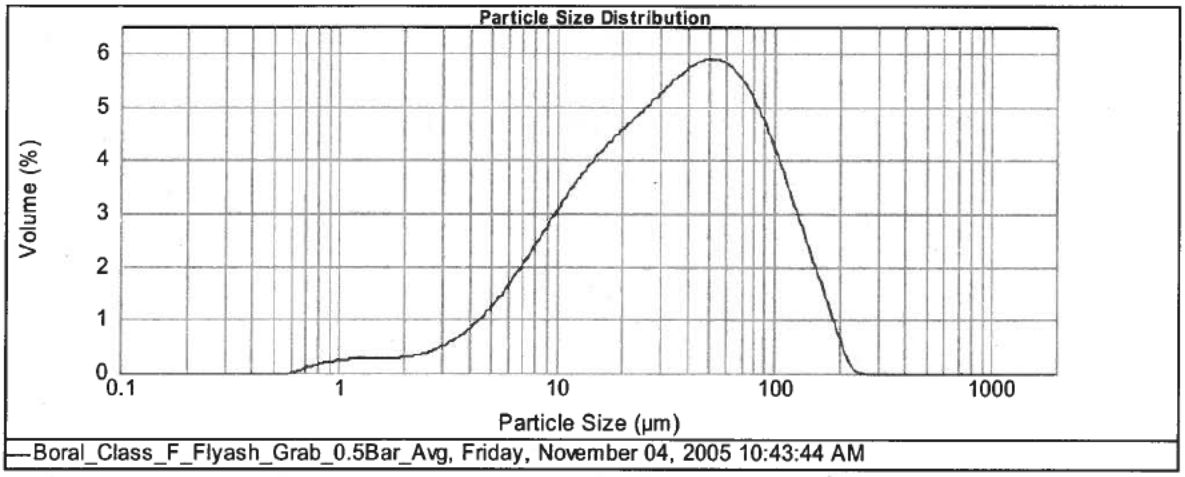

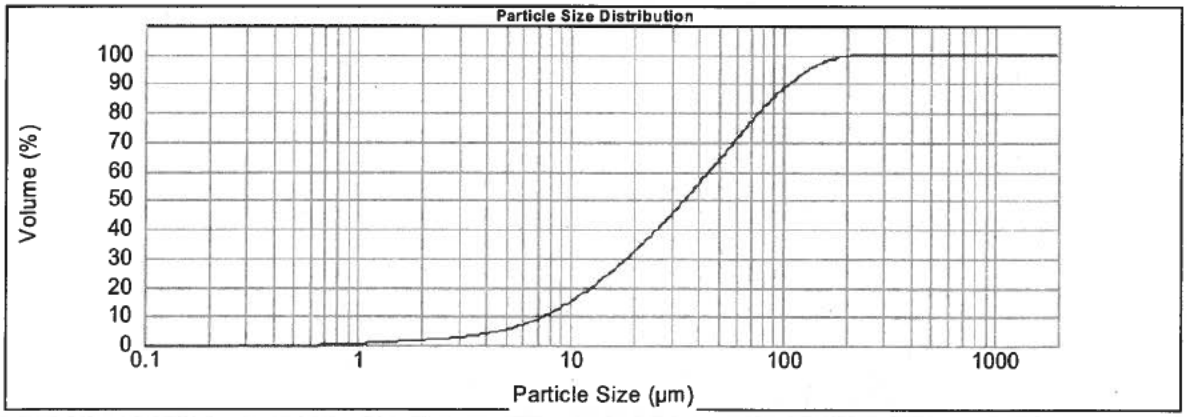

Size (µm)	Vol Under %	Size (µm)	Vol Under %	Size (µm)	Vol Under %	Size (µm)	Vol Under %	Size (µm)	Vol Under %
0.300	0.00	1.803	1.47	10.840	16.41	65.156	74.10	391.651	100.00
0.353	0.00	2.123	1.79	12.759	20.09	76.695	79.99	461.012	100.00
0.416	0.00	2.499	2.15	15.019	24.18	90.278	85.35	542.656	100.00
0.489	0.00	2.941	2.60	17.679	28.64	106.266	90.00	638.761	100.00
0.576	0.00	3.462	3.19	20.810	33.41	125.085	93.78	751.885	100.00
0.678	0.01	4.075	3.99	24.495	38.48	147.238	96.66	885.043	100.00
0.798	0.13	4.797	5.04	28.833	43.84	173.314	98.64	1041.784	100.00
0.939	0.34	5.646	6.44	33.939	49.51	204.008	99.74	1226.283	100.00
1.106	0.60	6.646	8.23	39.950	55.45	240.137	100.00	1443.457	100.00
1.301	0.89	7.823	10.47	47.025	61.63	282.665	100.00	1699.092	100.00
1.532	1.18	9.209	13.19	55.353	67.91	332.725	100.00	2000.000	100.00

Optical particle model: Default
Particle RI: 1.520
Absorption: 0.1
Dispersant: Dry dispersion

Analysis model: General purpose
Obscuration: 3.45 %
Weighted Residual: 0.413 %
Measurement int. time: 16806 mS

FAM

Malvern Instruments Ltd. Plot 1 File name: Flyash.mea

JENIKE & JOHANSON

5164-2

Particle Size Distribution Analysis

Sample Name:

Boral_Class_F_Flyash_Grab_3Bar_Avg

Jenike & Johanson ID: Supplier

Vol. Weighted Mean D[4,3]:	**36.700**	**um**
Surface Weighted Mean D[3,2]:	**10.652**	**um**
d(0.1):	**5.727**	**um**
d(0.5):	**25.588**	**um**
d(0.9):	**84.858**	**um**

Measured: Friday, November 04, 2005 10:49:23 AM

Notes: Average of 3 measurements from Flyash.mea

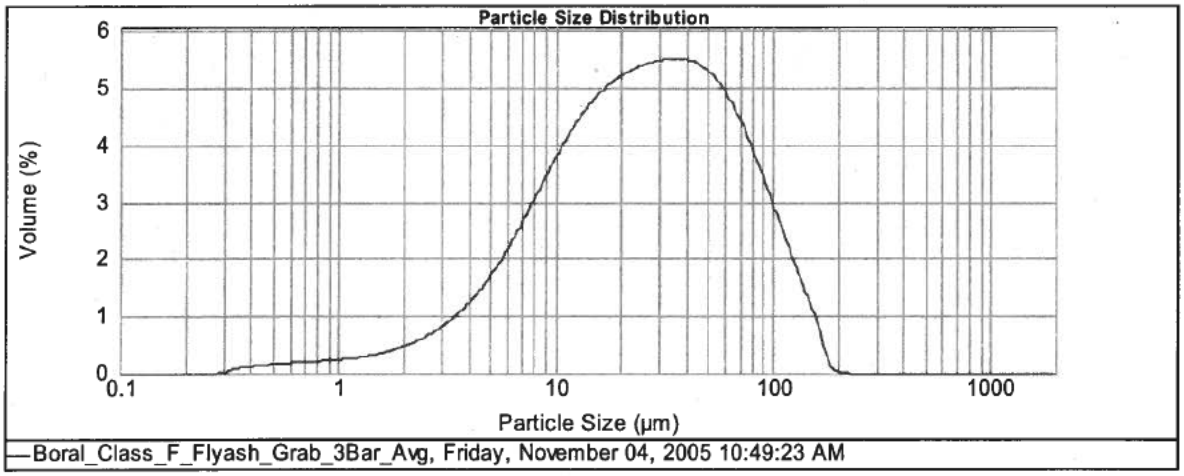

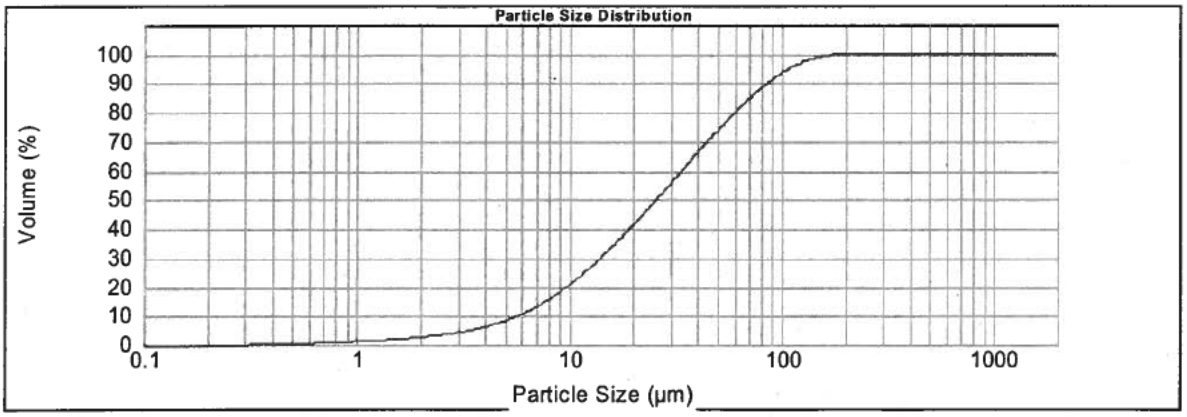

Size (µm)	Vol Under %	Size (µm)	Vol Under %	Size (µm)	Vol Under %	Size (µm)	Vol Under %	Size (µm)	Vol Under %
0.300	0.00	1.803	2.41	10.840	22.56	65.156	82.68	391.651	100.00
0.353	0.07	2.123	2.89	12.759	27.08	76.695	87.40	461.012	100.00
0.416	0.18	2.499	3.49	15.019	32.02	90.278	91.45	542.656	100.00
0.489	0.33	2.941	4.25	17.679	37.29	106.266	94.72	638.761	100.00
0.576	0.50	3.462	5.20	20.810	42.79	125.085	97.22	751.885	100.00
0.678	0.70	4.075	6.40	24.495	48.46	147.238	98.92	885.043	100.00
0.798	0.92	4.797	7.91	28.833	54.24	173.314	99.90	1041.784	100.00
0.939	1.15	5.646	9.81	33.939	60.10	204.008	100.00	1226.283	100.00
1.106	1.40	6.646	12.18	39.950	65.98	240.137	100.00	1443.457	100.00
1.301	1.69	7.823	15.08	47.025	71.79	282.665	100.00	1699.092	100.00
1.532	2.02	9.209	18.54	55.353	77.41	332.725	100.00	2000.000	100.00

Optical particle model:	Default	**Analysis model:**	General purpose
Particle RI:	1.520	**Obscuration:**	2.94 %
Absorption:	0.1	**Weighted Residual:**	0.286 %
Dispersant:	Dry dispersion	**Measurement int. time:**	9433 mS

FAM

Malvern Instruments Ltd. Plot 2 File name: Flyash.mea

JENIKE & JOHANSON

5164-2

BULK MATERIAL: Boral Class F Flyash
PARTICLE SIZE: As Rec'd
MOISTURE % WT: 0.07%

CREATE: 5/11/11
RUN: 5/11/23

JOB#: 5164.01
ID#: 24342

DELTA & PHI RELATIONS

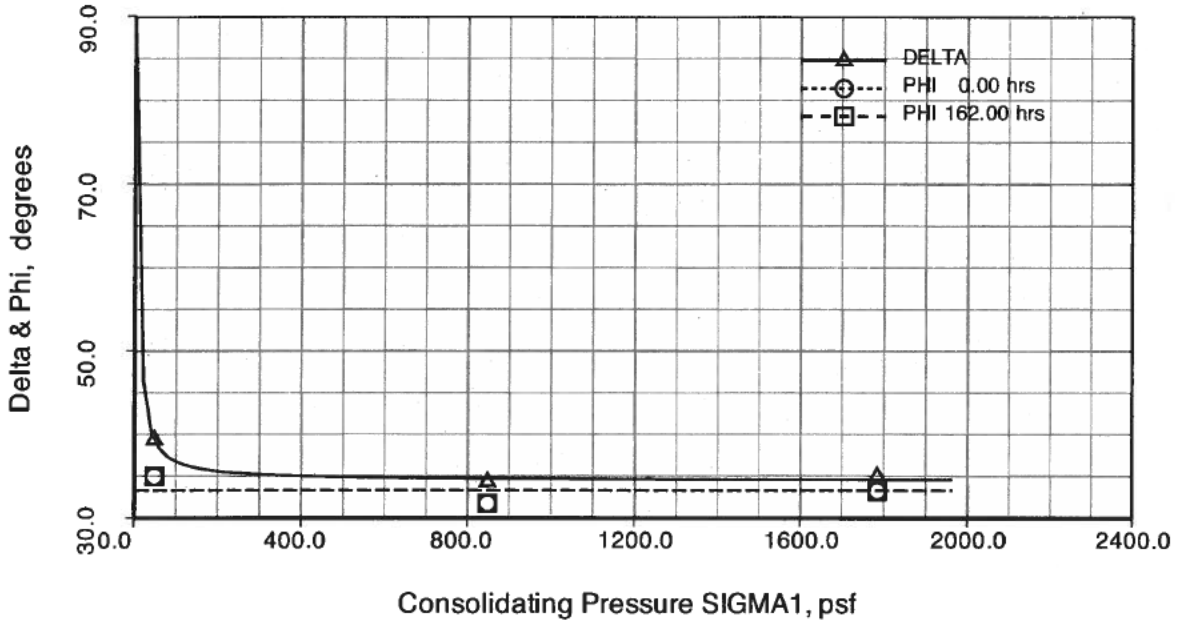

FLOW FUNCTION(S)

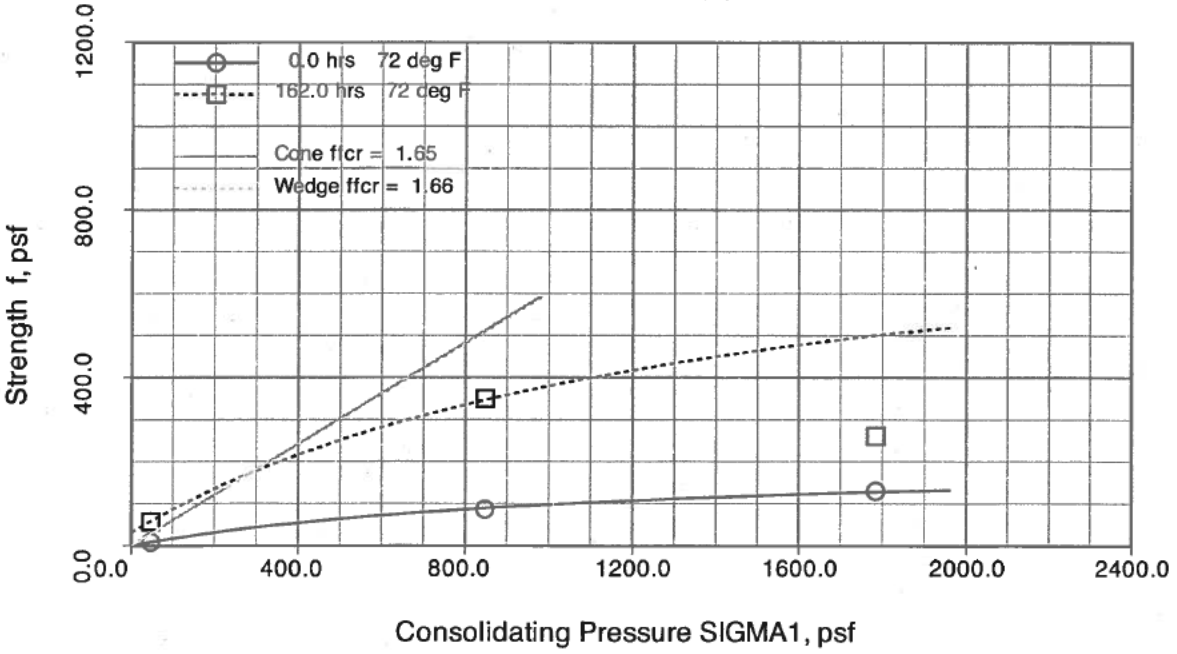

Plot 3

JENIKE & JOHANSON

5164-2

BULK MATERIAL: Boral Class F Flyash
PARTICLE SIZE: As Rec'd
MOISTURE % WT: 0.07%

CREATE: 5/11/11
RUN: 5/11/23

JOB#: 5164.01
ID#: 24342

YIELD LOCUS

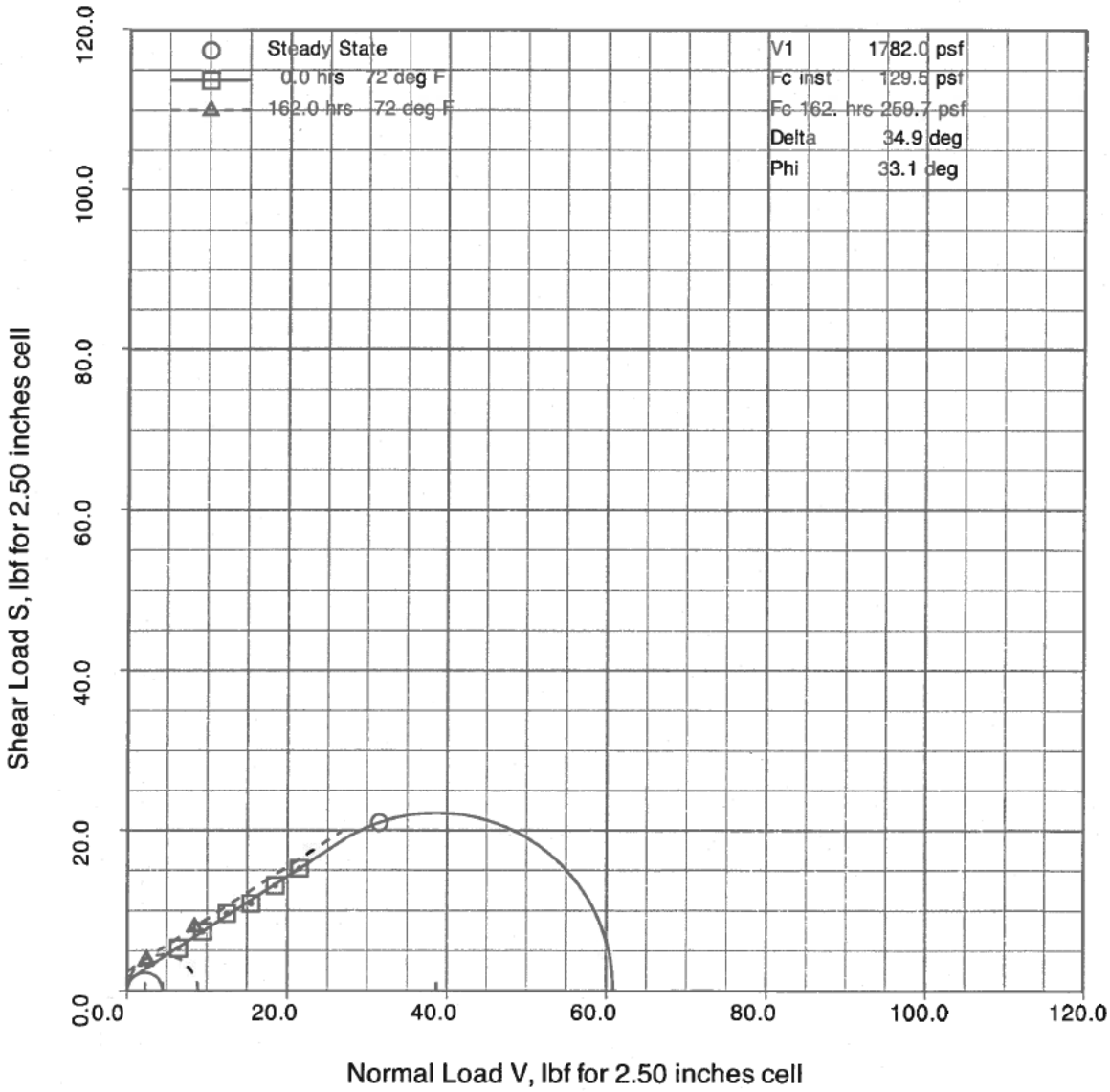

Plot 4

JENIKE & JOHANSON

5164-2

BULK MATERIAL: Boral Class F Flyash
PARTICLE SIZE: As Rec'd
MOISTURE % WT: 0.07%

CREATE: 5/11/11
RUN: 5/11/23

JOB#: 5164.01
ID#: 24342

YIELD LOCUS

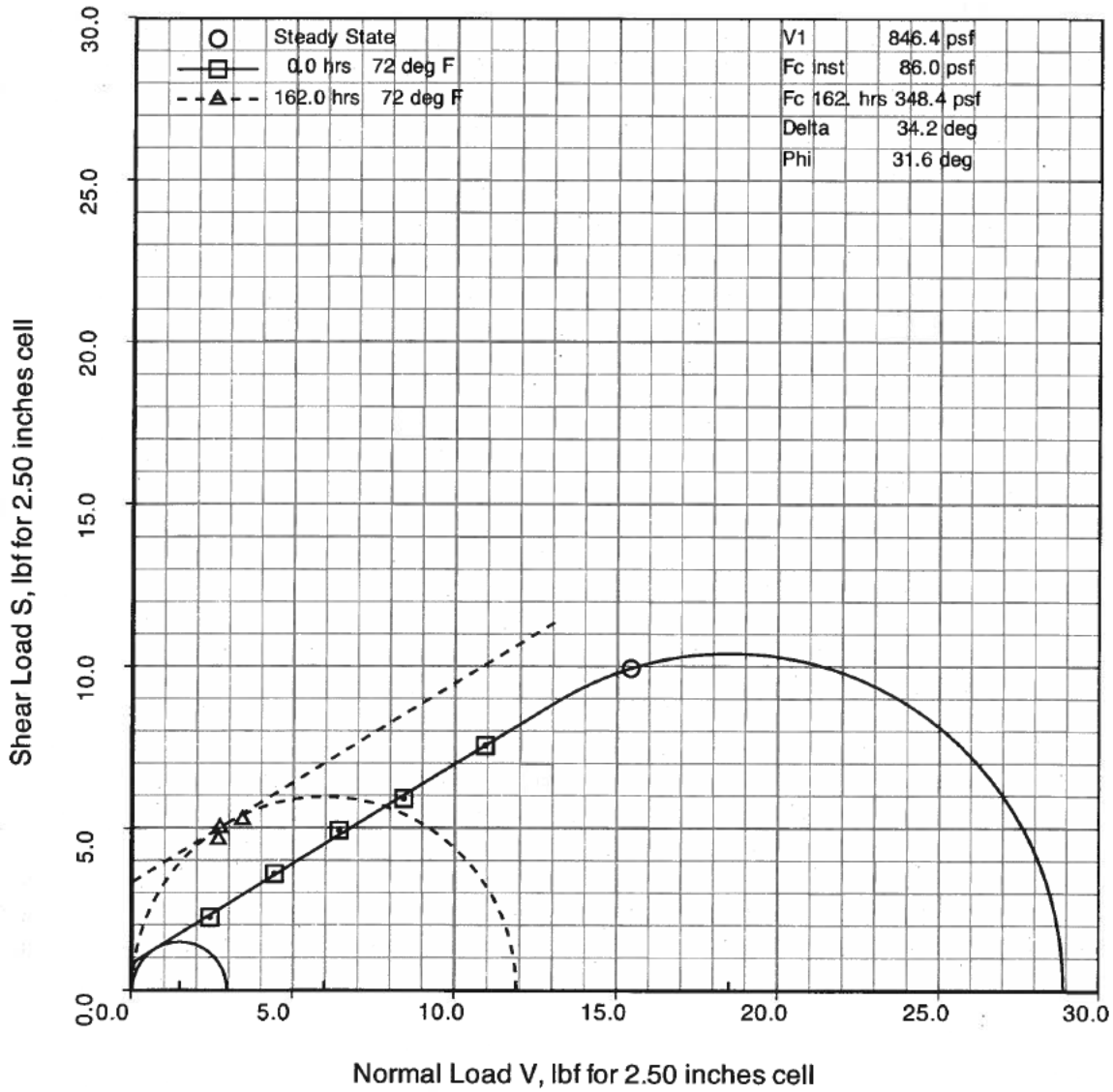

Plot 5

JENIKE & JOHANSON

5164-2

BULK MATERIAL: Boral Class F Flyash
PARTICLE SIZE: As Rec'd
MOISTURE % WT: 0.07%

CREATE: 5/11/11
RUN: 5/11/23

JOB#: 5164.01
ID#: 24342

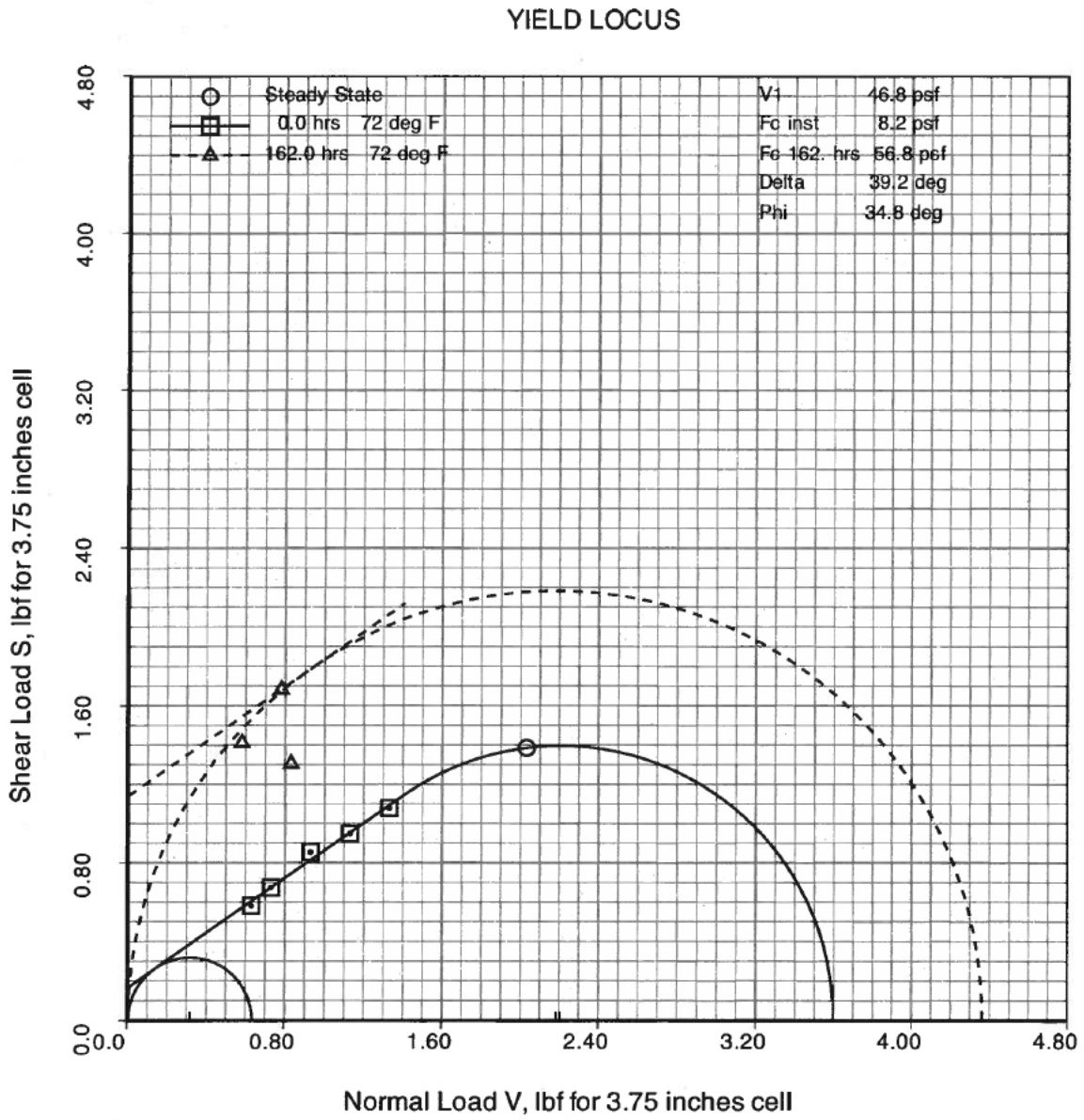

Plot 6

JENIKE & JOHANSON

5164-2

BULK MATERIAL: Boral Class F Flyash
PARTICLE SIZE: As Rec'd
MOISTURE % WT: 0.07%
TEMPERATURE: 72 deg F

CREATE: 5/11/11
RUN: 5/11/23

JOB#: 5164.01
ID#: 24342

BULK DENSITY VS. CONSOLIDATING PRESSURE

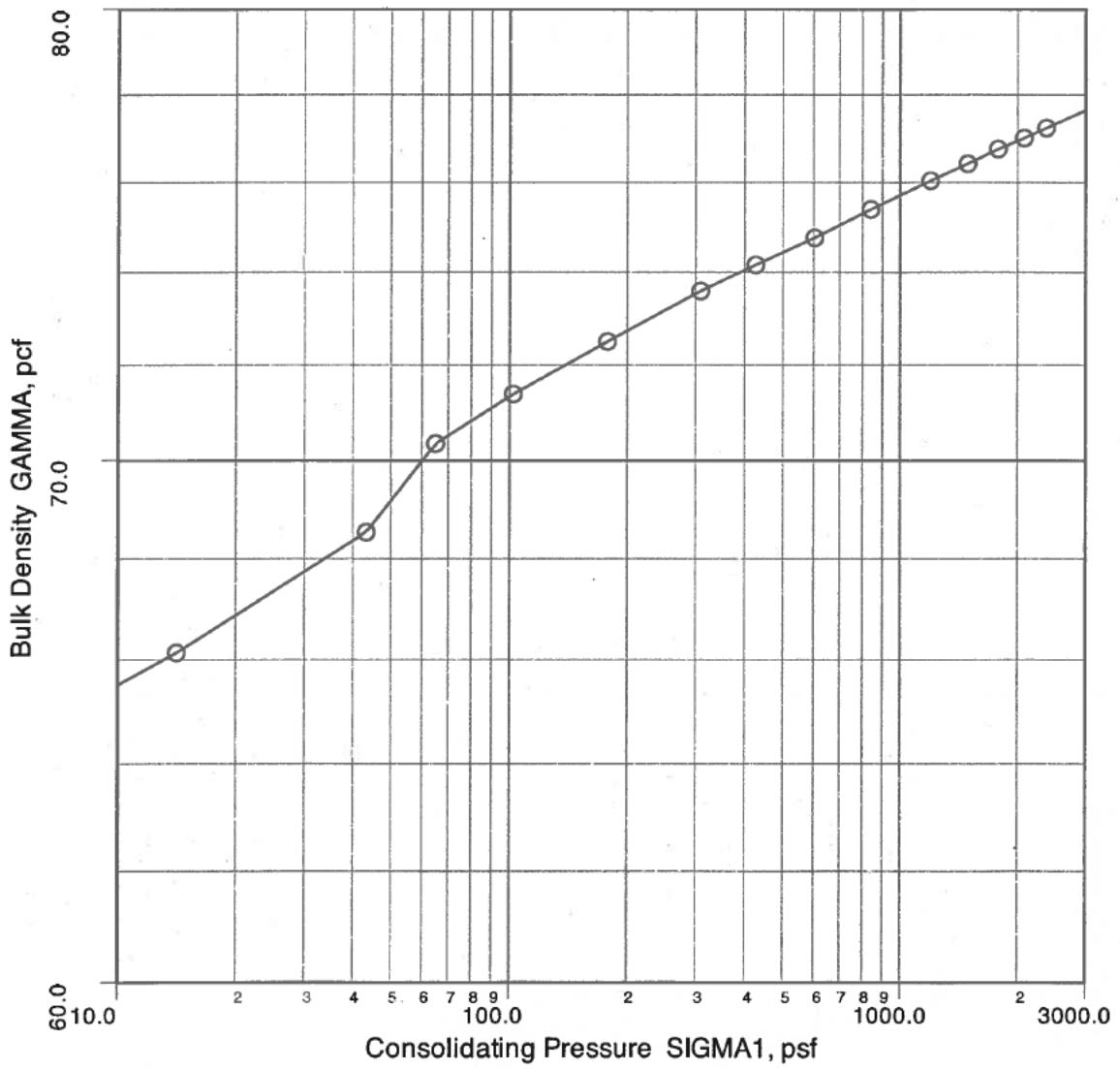

Plot 7

JENIKE & JOHANSON

5164-2

BULK MATERIAL: Boral Class F Flyash
PARTICLE SIZE: As Rec'd
MOISTURE % WT: 0.07%
TEMPERATURE: 72 deg F

CREATE: 5/11/11
RUN: 5/11/23

JOB#: 5164.01
ID#: 24342

WALL YIELD LOCUS

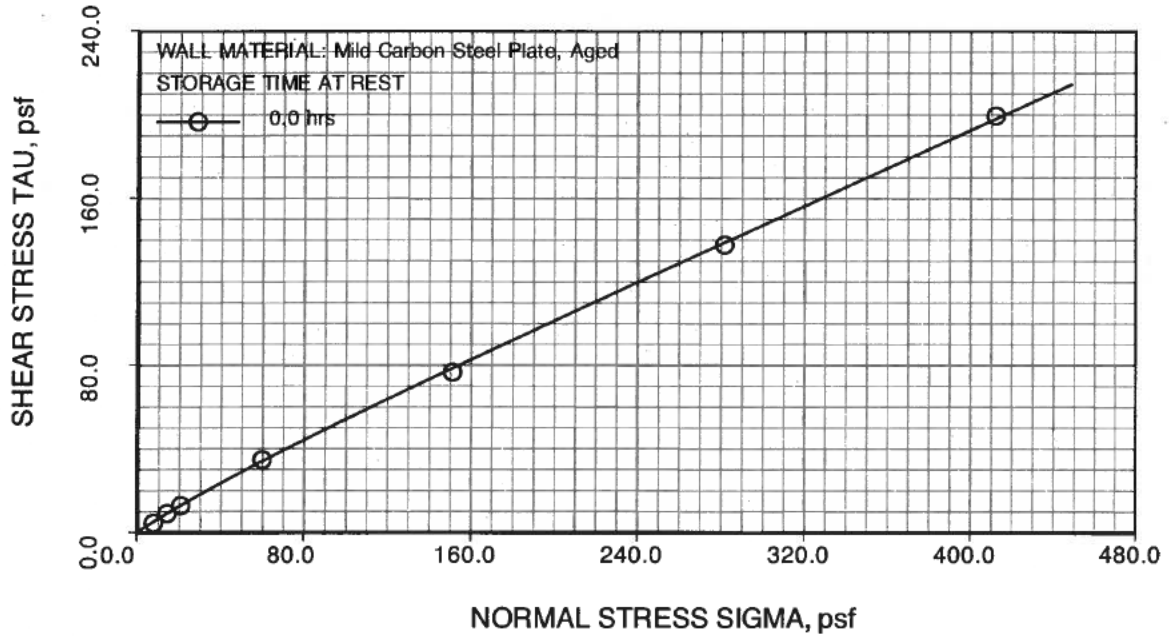

WALL FRICTION ANGLE

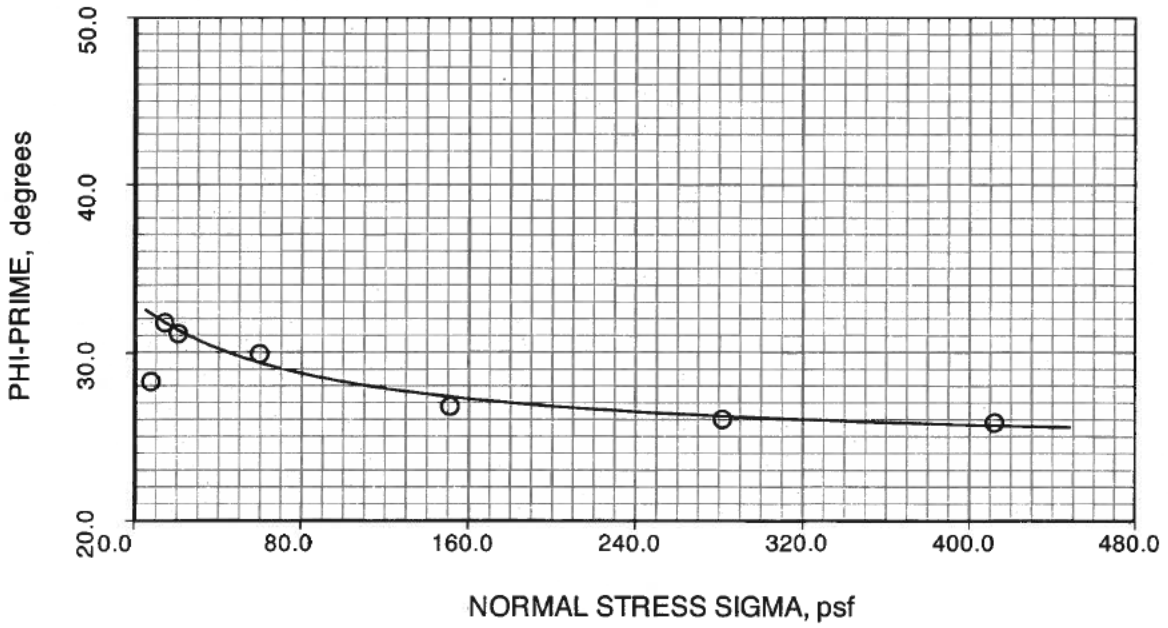

Plot 8

JENIKE & JOHANSON

5164-2

BULK MATERIAL: Boral Class F Flyash
PARTICLE SIZE: As Rec'd
MOISTURE % WT: 0.07%
TEMPERATURE: 72 deg F

CREATE: 5/11/11
RUN: 5/11/23

JOB#: 5164.01
ID#: 24342

WALL YIELD LOCUS

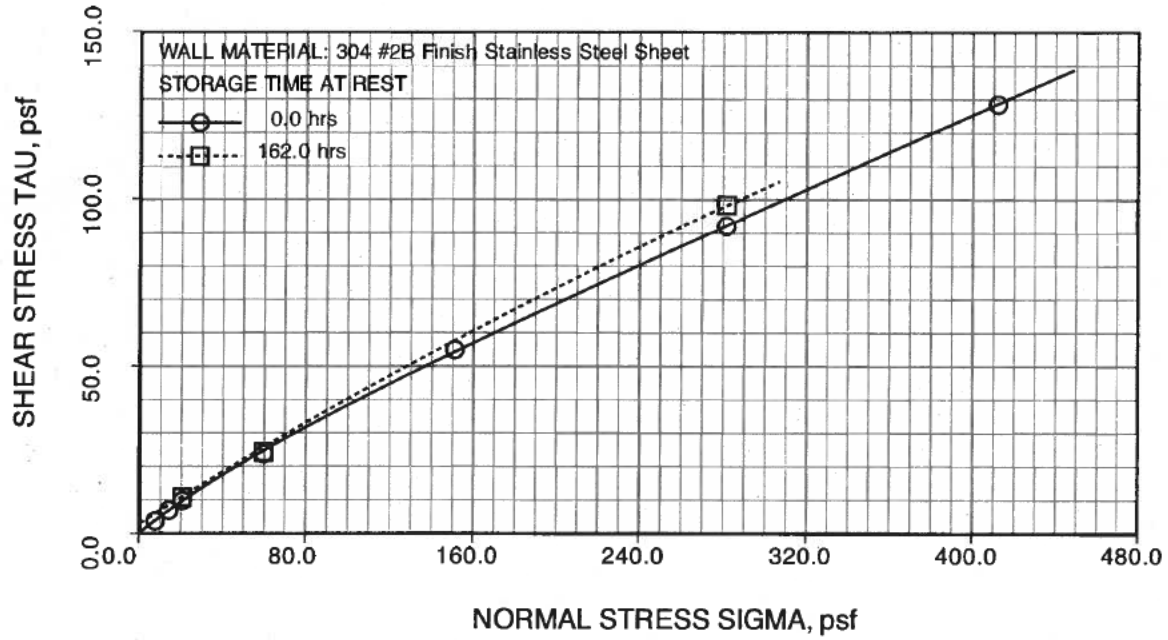

WALL FRICTION ANGLE

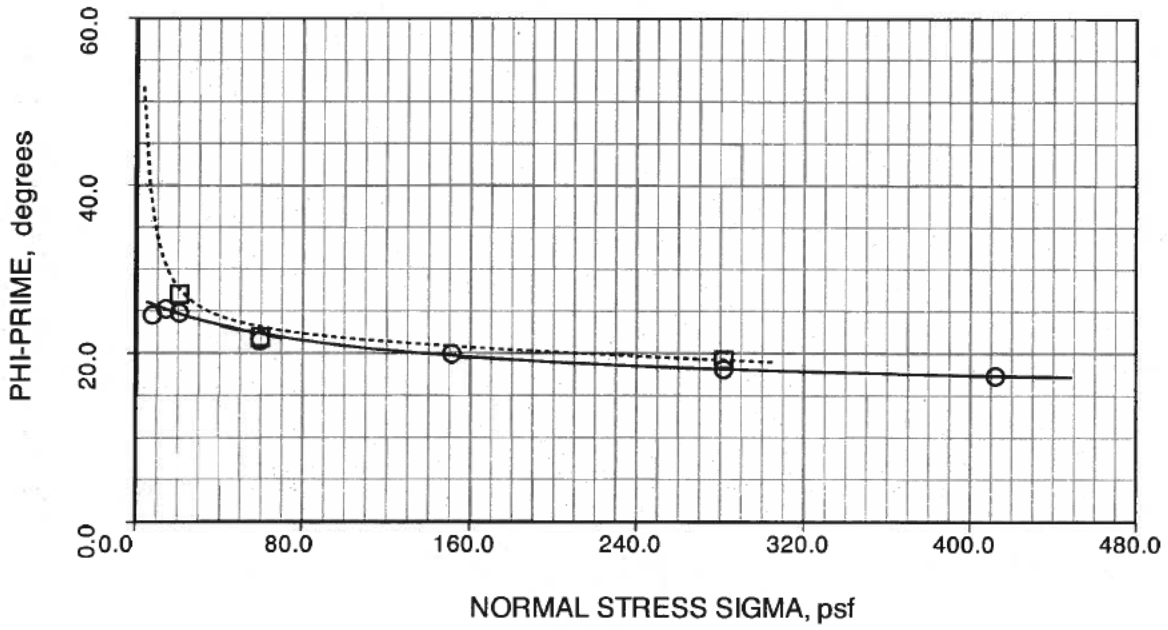

Plot 9

JENIKE & JOHANSON

5164-2

BULK MATERIAL: Boral Class F Flyash
PARTICLE SIZE: As Rec'd
MOISTURE % WT: 0.07%
TEMPERATURE: 72 deg F

CREATE: 5/11/11
RUN: 5/11/23

JOB#: 5164.01
ID#: 24342

WALL YIELD LOCUS

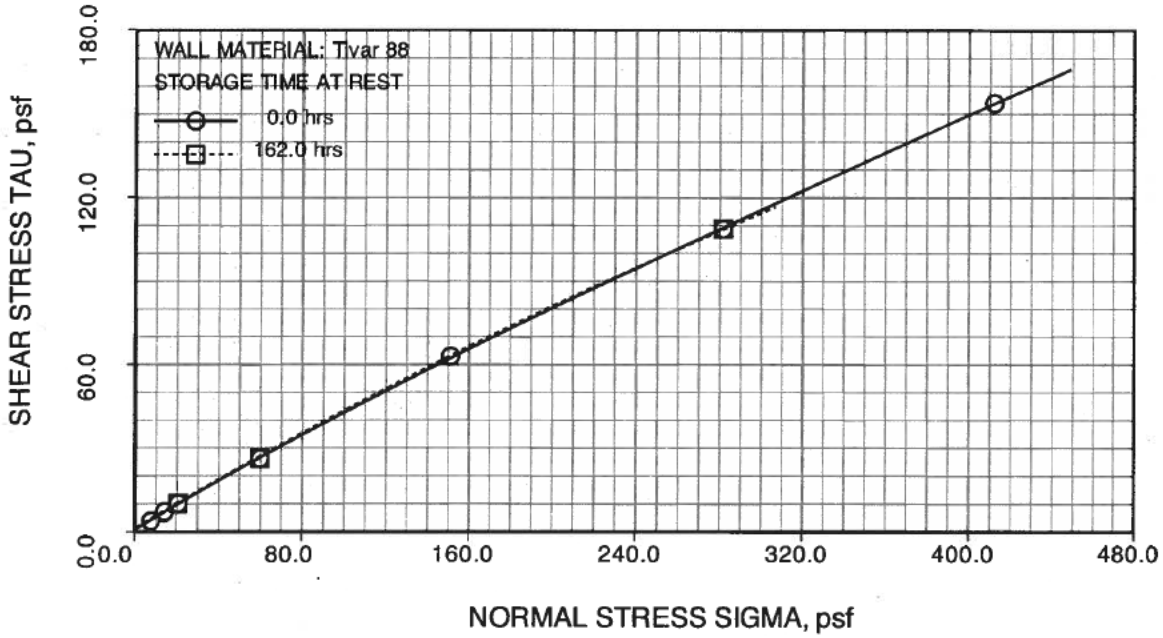

WALL FRICTION ANGLE

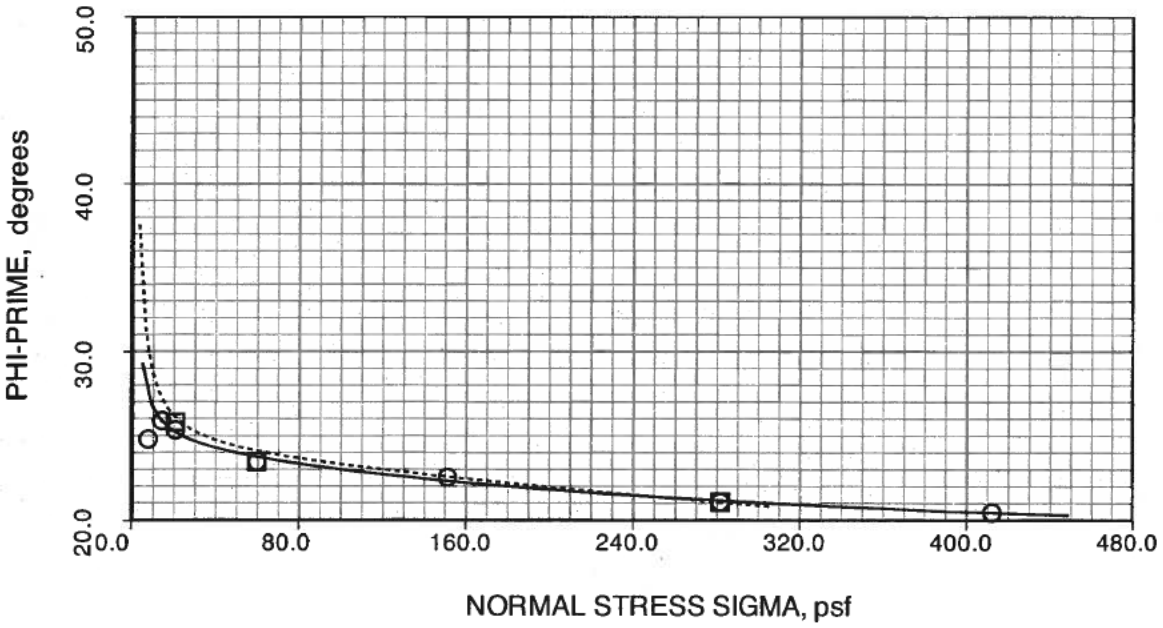

Plot 10

JENIKE & JOHANSON

5164-2

BULK MATERIAL: Boral Class F Flyash
PARTICLE SIZE: As Rec'd
MOISTURE % WT: 0.07%
TEMPERATURE: 68 deg F

CREATE: 5/11/11
RUN: 5/11/23

JOB#: 5164.01
ID#: 24342

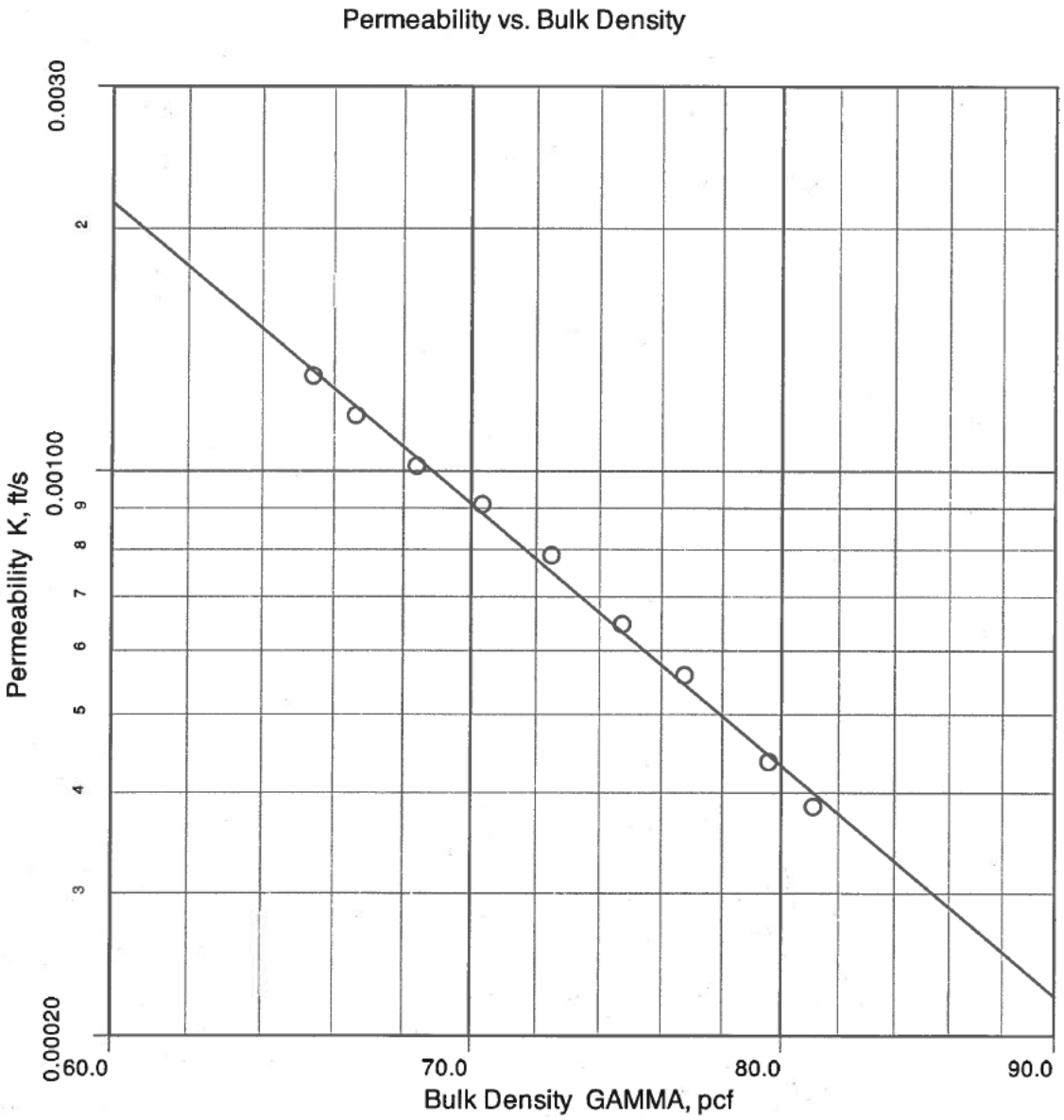

Plot 11

JENIKE & JOHANSON

5164-2

Table of Contents – Appendix

	Page
SELECTION OF BIN AND FEEDER	A2
Types of bins	A2
Mass flow bins	A2
Funnel flow bins	A2
Expanded flow bins	A3
Feeders	A3
DISCUSSION OF TEST REPORT DATA	A4
Moisture	A4
Section I - Bin dimensions for dependable flow	A4
Calculation of effective head EH	A5
Calculation of P-FACTORs	A6
Vibration	A6
Impact pressure from fall into a bin	A6
External loading	A7
Liquid or gas flow loading	A7
Limits on bin sizes	A7
Section II - Bulk density	A7
Section III - Maximum hopper angles for mass flow	A8
Section IV - Critical solids flow rate	A8
Coarse bulk solids	A8
Fine bulk solids	A8
Section V - Air permeability test results	A9
Section VI - Chutes	A9
GLOSSARY OF TERMS AND SYMBOLS	A11
TECHNICAL PAPERS REFERENCE	A14
FIGURES	
Figure A1: Mass flow bins	A16
Figure A2: Funnel flow bins	A17
Figure A3: Expanded flow bins	A18

SELECTION OF BIN AND FEEDER

Types of bins

A bin (silo, bunker) generally consists of a vertical cylinder and a sloping, converging hopper.

The first step in the process of bin selection is to decide on the type of bin required. From the standpoint of flow, there are three types: mass flow, funnel flow, and expanded flow.

Mass flow bins

In a mass flow bin, the hopper is sufficiently steep and smooth to cause flow of all the solids without stagnant regions whenever any solids are withdrawn.

Mass flow bins, examples of which are shown in Figure A1, have certain advantages. Flow is uniform, and the feed density is practically independent of the head of solids in the bin. This frequently permits the use of volumetric feeders for feed rate control. Since stagnant regions are eliminated, low level indicators work reliably. Even though the solids may segregate at the point of charge into the bin, segregation of the discharge is minimized by the first-in-first-out flow sequence associated with mass flow. This flow sequence also ensures uniform residence time and deaeration of fine powders.

Mass flow bins are recommended when handling cohesive materials, powders, and materials which degrade with time, and when segregation needs to be minimized.

Ledges and protrusions are not permitted in a mass flow hopper. In addition, the outlet must be fully effective. If the hopper is equipped with a shut-off gate, the gate must not prevent flow of material along the hopper wall. If a feeder is used, it must draw material across the full outlet area. (See "Feeders" below)

Mass flow bins can be used for in-bin blending. Of particular benefit in this regard is Jenike & Johanson's patented BINSERT® system. This device controls the flow pattern of solids in a bin.

Funnel flow bins

Funnel flow occurs when the hopper is not sufficiently steep and smooth to force material to slide along the walls. It also occurs when the outlet of a mass flow bin is not fully effective. Examples of funnel flow bins are shown in Figure A2.

In a funnel flow bin, solids flow toward the outlet through a channel that forms within stagnant material. With non-free-flowing solids, this channel expands to a diameter that approximates the largest dimension of the outlet. When the outlet is fully effective, this dimension is the outlet's diameter if circular, or the diagonal if the outlet is square or rectangular. The channel will be stable if its diameter is less than the critical rathole diameter.

With free-flowing solids, the flow channel expands at an angle which depends on the effective angle of friction of the material. The resulting flow channel is generally circular with a diameter in excess of the outlet diameter or diagonal.

When the bin discharge rate is greater than the charge rate, the level of solids within the channel drops, causing layers to slough off the top of the stagnant mass and fall into the channel. This spasmodic behavior is detrimental with cohesive solids since the falling solid packs on impact,

thereby increasing the possibility of arching. With sufficient cohesion sloughing may cease, allowing the channel to empty out completely and form a stable rathole. Aerated solids charged into this empty rathole might overflow the feeder.

When a fluidized powder is charged directly into a funnel flow channel at a sufficiently high rate and is withdrawn at the same time, it has no chance to deaerate. It therefore remains fluidized in the channel and floods when exiting the bin. A rotary valve is often used under these conditions to contain the material, but a uniform flow rate cannot be ensured because flow into the valve is erratic.

In general funnel flow bins are suitable only for coarse, free-flowing or slightly cohesive, non-degrading solids when segregation is unimportant.

Converting funnel flow bins to mass flow can often be achieved with relatively little expense. One way to do this is to use the BINSERT® system referred to in the paragraph on blending above. Another way is to install a low friction liner.

Expanded flow bins

Examples of expanded flow bins are shown in Figure A3. The lower part of such a bin operates with flow along the hopper walls (similar to mass flow), while the upper part operates in funnel flow. The mass flow outlet usually requires a smaller feeder than would be the case for a funnel flow bin. The mass flow hopper section should expand the flow channel to a diagonal or diameter equal to or greater than the critical rathole diameter. This eliminates the likelihood of ratholing in the funnel flow section.

These bins are used for storage of large quantities of non-degrading solids. This design is also useful as a modification of existing funnel flow bins to correct erratic flow caused by arching, ratholing, or flooding.

This concept can be used with multiple outlets as shown in Figure A3 (B), where simultaneously flowing mass flow hoppers are placed close enough together to cause a combined flow channel larger than the critical rathole diameter.

With extremely free-flowing solids such as plastic pellets, cement clinker, and coarse sand, both funnel flow and expanded flow bins may pulsate. This is caused by the flow pattern suddenly switching from a steady state, central channel-type flow to a much more extensive secondary flow pattern that may extend to the bin walls. Such a condition may reduce segregation problems, but the shock loads imposed may seriously challenge the structural integrity of the bin.

Feeders

Feeders are used to control the rate of material discharge from a bin (hopper, silo, bunker) outlet. They must not be confused with conveyors, which simply transport material from one point to another. Common feeders include screws, belts, rotary vanes, rotary plows, rotary tables, vibrating pans, and vibrating louvers. The rate of material being discharged is most commonly controlled volumetrically from these feeders, i.e., the volume of material per unit time may be varied by changing feeder speed, amplitude, or frequency. Several of these feeders may also operate gravimetrically, i.e., the mass of material per unit time is measured and controlled.

Proper feeder selection depends on a number of factors based on the bin choice and feed requirements.

Two major objectives for efficient feeder design are uniform withdrawal of the material from the entire bin outlet area (i.e., fully effective outlet) and minimizing the material loads on the feeder, all

within the process requirements of flow rate and layout. In order to ensure that the outlet is fully effective, the choice of feeder must be based on the outlet size and shape. If the requirements of bin selection dictate that the outlet be slotted, the feeder must increase in capacity in the direction of feed to ensure a uniform draw of material across the entire outlet. The choice of feeders is generally limited to either a belt or a screw. If the feeder's capacity does not increase properly, the feeder will tend to draw material from either the front or back of the slot, resulting in a high velocity flow channel having a diameter only one to two times the width of the slot. This becomes critical when feeding powders, since the powder may remain fluidized within this channel and flood on exiting the bin.

To limit high initial loads and starting torque caused by differential settlement between the hopper and the feeder, it is essential that the feeder be either suspended from the bin itself or supported on a flexible frame so as to readily deflect with the bin as solids are added to it.

Detailed feeder selection guidelines are explained in technical papers available from Jenike & Johanson, several of which are listed in the Technical Papers Reference at the end of this Appendix.

DISCUSSION OF TEST REPORT DATA

In the discussion that follows, each section of the test report is explained in general terms. Please refer to Figures A1, A2, and A3, where many of the symbols are shown. The symbols and other terms used in the text are explained in the Glossary of Terms and Symbols on pages A13 to A15. The concepts of gravity flow of solids and examples of application of solids flow data are described in technical papers available from Jenike & Johanson. (See the Technical Papers Reference at the end of this Appendix).

Moisture

Unless otherwise noted, moisture values quoted in this report have been determined by preparing three samples, approximately 15 g each. If the material contains coarse particles, each sample was first screened to -6 mesh. The samples were then dried at 107°C for two hours in a forced convection oven. The three values of loss in weight of each sample divided by its original weight were averaged and denoted as the sample's moisture.

Section I - Bin dimensions for dependable flow

This section specifies the bin outlet dimensions necessary for dependable flow in both mass flow and funnel flow bins. These dimensions have been calculated on the basis of the frictional and cohesive properties of the solid given in a subsequent part of the report. In all cases, it is assumed that flow takes place only under the action of gravity, i.e., without internal or external assistance.

In general these dimensions are a function of the time the solid remains in storage at rest; its moisture content, temperature, and particle size; and overpressure, if any, that is applied to it during storage. The P-FACTORs given in the table are ratios of applied compaction pressure to that pressure resulting from gravity flow only. If there are no overpressures present, the critical dimensions for P-FACTOR = 1.0 should be used. If the P-FACTOR is greater than 1.0, it is assumed that overpressures have been exerted on the solid during storage, but are removed when the solid is required to flow. See pages A6 to A8 for calculation of P-FACTORs. If overpressures are applied during discharge, additional considerations are required; contact a Jenike & Johanson engineer to discuss your specific application.

When considering the effect of overpressure, which acts on a solid during time of storage at rest, it is not necessary that the overpressure act during the entire time at rest. Soon after an overpressure has been applied, a solid reaches the maximum densification associated with the overpressure.

Hence, the critical outlet dimensions will be essentially the same whether the overpressure acts for a short time or continuously during the entire time at rest.

Mass flow bins have hopper walls that are smooth enough and steep enough to cause flow along them; hence, stable channels within the material (ratholes) do not develop. Only two dimensions, both of which are shown in Figure A1, are specified: BC, the minimum outlet diameter for a conical hopper; and BP, the minimum width for a slotted or oval outlet. The length of the slot or oval should be at least three times its width or the end walls must be vertical and smooth for BP to apply. These outlet dimensions are recommended to prevent cohesive arching. Particle interlocking should also be considered.

A funnel flow bin is created whenever the hopper walls are not steep enough and smooth enough to cause flow along them. Slotted outlets are recommended for these bins unless the material is quite free flowing. To prevent stable arches from forming, the width of the slot must be at least equal to BF. In a funnel flow bin the solid is held up at the walls and flows only within a circular channel whose diameter is approximately equal to the diameter or length of the effective outlet. If this flow channel diameter is less than the critical rathole diameter DF given in the report, a stable rathole is likely to form, and the live capacity of the bin will be essentially only that material which is in the flow channel above the outlet. To prevent stable ratholes from forming, funnel flow bins should be designed with slotted outlets of length at least as long as DF.

In general, DF is proportional to the consolidating pressure imposed on the solid during filling of the bin. Hence, in the upper regions of a bin where pressures are low, the critical rathole diameter DF is small and the flow channel diameter may exceed DF. This causes the rathole to be unstable at this point, allowing the material to collapse into the stable rathole below. A partial emptying of the bin will result.

<u>Calculation of effective head EH</u>

The critical rathole diameter DF is a function of the major consolidating pressure which acts on the solids in the bin. It is convenient to express this pressure in terms of EH, the effective consolidating head of solid in the bin, as follows:

$$EH = [R/(\mu k)]\,[1 - e^{-\mu k H/R}] \quad \text{or} \quad EH = 2R \qquad (1)$$

whichever is larger. The parameters are:

R = hydraulic radius of the cylindrical portion of the bin, i.e., ratio of cross sectional area to circumference
R = D/4 for a circular cylinder of diameter D or a square cylinder of side D
R = W/2 for a long rectangular cylinder of width W

μ = tan (PHI-PRIME), coefficient of friction between the stored solid and the cylinder walls (see Section III)

k = ratio of horizontal to vertical solids pressure. A value of 0.4 is usually acceptable within cylinders

H = height of the cylindrical portion of a bin

When the feeder is properly designed for uniform flow and when convergence of the hopper extends to the feeder, the effective head EH of solid on the feeder during flow in a mass flow bin is approximately

$$EH = BP \text{ for a transition mass flow hopper}$$
$$EH = BC/2 \text{ for a conical mass flow hopper} \qquad (2)$$

See page A5 for definitions of BP and BC.

Initial loads may be several times these values.

Calculation of P-FACTORs

The magnitude of the overpressure factor can be estimated for vibration, impact during charging into the bin, external loading, and fluid flow loading as follows (note these are valid only if applied prior to flow):

Vibration. Vibration has two effects: while it tends to break arches that obstruct flow, it also packs the solid in stagnant regions, thereby giving it greater strength. In order to allow for this packing, the recommended outlet dimensions at zero time at rest for a P-FACTOR of 1.5 may be used as an approximation when calculating critical arching dimensions for use with vibrating equipment.

Vibrators are suitable for materials which are free flowing under conditions of continuous flow but cake and gain strength when stored at rest for hours or days. Hoppers for these materials should be equipped with pads for mounting external vibrators. Vibrators should be used only to initiate flow and should be turned off once flow has started.

Fine powders and wet materials tend to pack severely when vibrated; hence, vibrating equipment is generally not recommended for them.

$$\text{P-FACTOR} = (1 + az/g)$$
$$\text{or} \qquad (3)$$
$$\text{P-FACTOR} = ay/g$$

whichever is larger, where:

a_z = vertical upward component of acceleration imposed on the solid
a_y = horizontal component of acceleration imposed on the solid
g = gravitational acceleration constant

Impact pressure from fall into a bin. A coarse material compacts as it is charged into a bin, under the impact of the falling particles. When the material contains fines and the impact area is close to the outlet, the impact P-FACTOR should be used in the design.

$$\text{P-FACTOR} = (1 + m)\,[w/(A\ B\ GAMMA)]\,\sqrt{2h/g} \qquad (4)$$

where:

w = weight flow rate into the bin
h = height of fall
m = 0 for a long rectangular outlet
m = 1 for a circular or square outlet

A = area impacted by the falling stream of solids
B = outlet size or bin dimensions in the region of impact, i.e., the diameter in a conical hopper or the width in a wedge shaped or transition hopper
GAMMA = bulk density of solid

External loading. If the solid has been compacted by an external load F (such as the weight of a tractor passing over an outside stockpile), the overpressure factor at the point of application is given by

$$\text{P-FACTOR} = (1 + m)\ F/(A\ B\ \text{GAMMA}) \qquad (5)$$

where:

A = area of load application

Liquid or gas flow loading. If the solid has been subjected during storage to fluid or gas flow such as may have been imposed by an air blaster, draining of a saturated solid or the flow of air or gas during drying or chemical processing, the overpressure factor is given by

$$\text{P-FACTOR} = 1 + (dp/dz)/(\text{GAMMA}) \qquad (6)$$

where:

dp/dz = the (vertical) liquid or gas pressure gradient at the bin outlet where z is positive upward.

Limits on bin sizes

The bin dimensions in part A of this Section I apply to bins of unlimited maximum size. However, some materials will compact in large bins, causing large stable arches in the upper part of the hopper while the lower portion may discharge without a problem. This can lead to a very dangerous condition when a large arch is broken high in the hopper. The impact of the falling material may cause structural damage to the bin and possibly tear the hopper from the vertical bin section. If the material is capable of this type of behavior, an additional part B is included which gives the maximum allowable mass flow bin and hopper dimensions.

Often the upper limits on bin size occur only for compaction with time or for significant overpressure conditions. If this is the case, the bin can be designed for an unlimited size, provided the critical time and overpressure values are not exceeded during the bin operation.

Section II - Bulk density

The bulk density GAMMA of a material is used in bin load and capacity calculations. Values of bulk density of the sample tested are given in Section II as a function of the effective head of solid EH and the major principal consolidating pressure SIGMA1. The relationship is:

$$\text{SIGMA1} = \text{EH}\ \ \text{GAMMA} \qquad (7)$$

Within the cylindrical part of a bin, the effective consolidating head EH is given by eq. (1). At the outlet of a mass flow bin, the head is given by eq. (2).

Note that if the sample tested is the fine fraction of a material having a wide range in particle size, inclusion of the coarser particles will usually increase the bulk densities above those given in this section.

Bulk density values have been computed from measured compressibility parameters of the material, which are also given in Section II. In general, all materials have a minimum density GAMMA MINIMUM without fluidization. The relationship between bulk density and consolidating pressure applies only when densities are greater than GAMMA MINIMUM.

Section III - Maximum hopper angles for mass flow

A solid sliding on a bin wall encounters frictional resistance proportional to the tangent of the wall friction angle PHI-PRIME. This angle generally depends not only on the roughness of the wall but also on the pressure that the solid exerts on the wall. For many hard wall surfaces, the friction angle decreases as the solids contact pressure increases. This pressure, which varies with position in the bin, is usually lowest at the outlet; therefore, the hopper angle required is often dictated by the outlet size selected.

THETA-C and THETA-P are the recommended maximum hopper wall angles, measured from the vertical, for conical and transition mass flow hoppers, respectively. See Figure A1. These values have been calculated from the friction tests (wall yield loci) included at the end of the report and are tabulated for a series of widths of oval hoppers and diameters of conical hoppers.

To minimize headroom, consider changing the slope of the hopper wall as a function of position. For example, if a conical hopper is to be designed with an outlet diameter of 1 ft. and the recommended THETA-C is 14° at 1 ft. diameter and 23° at 2 ft. and larger diameters, use two conical sections. In the lower section where the diameter varies from 1 ft. to 2 ft., use a hopper angle of 14°. Above the 2 ft. diameter, use a hopper angle of 23°.

Often, both continuous flow and time friction tests are run on a material. If the solid adheres to the wall with time, the time test results will indicate an increase in friction angles. To overcome this time effect, the hopper walls should be made steeper, as recommended, or other means – such as vibration of the bin walls – should be provided to initiate flow.

Section IV - Critical solids flow rate

Coarse bulk solids

The maximum rate Q at which a coarse solid (say, 95% plus 1/4 in.) flows out of a mass flow hopper is practically independent of the head of solid and is approximately given by

$$Q = (A\ GAMMA)\ \sqrt{Bg/[2(1+m)\tan(THETA)]} \qquad (8)$$

where:

A = area of the outlet
B = diameter or width of the outlet
THETA = planar hopper wall angle for rectangular or oval outlets, or
= conical hopper wall angle for circular outlets

Fine bulk solids

Predicting the flow rate of fine solids from mass flow bins is more complicated because their outflow is critically affected by the amount of air entrained in the solid.

Two limiting cases may occur: first, the bin may be charged and discharged at such a rapid rate that a large amount of air is entrained within the solid. As a result the solid may flood uncontrollably from the outlet independent of feeder speeds. The prediction of this critical flooding condition requires an extensive two-phase flow calculation using a Jenike & Johanson proprietary computer program and is not a part of this Flow Properties Test Report.

Second, the bin may be filled intermittently, with sufficient retention time before discharging so that the powder is deaerated. As a result there may be a deficiency of air as the solids expand upon discharging. This generally causes a critical flow rate at the outlet which is tabulated in this section as a function of effective head of solid in the bin. Above this critical rate, flow will be non-steady.

The critical rates are computed on the assumptions that there is no air in-flow or out-flow along the height of the bin, that air pressure at the outlet of the bin is the same as at the top of the bin, and that the feeder outlet is not sealed against air in-flow. Should the operating conditions deviate from these assumptions, a controlled rate different from the critical may be possible.

If the tabulated flow rates are lower than desired, it may be necessary to use an air permeation system to increase the rate; increase the outlet size; decrease the bin size; or limit the storage time to prevent deaeration of the solid. Jenike & Johanson can analyze the system and make recommendations.

If the specified flow rate from a bin is close to critical values, it is particularly important that the feeder withdraw uniformly across the entire outlet. If this is not done, localized limiting rate effects may occur at the outlet, especially at the ends of a slotted outlet. This may result in pulsating flow from the bin, the development of fast flowing columns, and an uncontrolled rate of withdrawal with flooding.

All the above comments apply as well when a gas other than air is used in the bin. The critical property is the viscosity of the gas. The permeability tests run by Jenike & Johanson are usually done with air at room temperature. When the gas or the temperature is different, the coefficient of permeability needs to be modified, as discussed below.

Section V - Air permeability test results

Values of air permeability are expressed as a function of the bulk density of the solid. These values are used in the calculation of critical flow rates, given in Section IV, and in the design of air permeation systems. Permeability is also used for purge vessel or dryer design and when fluidization is recommended.

The equation given in this section and the test method are both based on the assumption of laminar flow of gas. This assumption is generally valid for all powders and for most materials which have a significant portion of particles less than 20 mesh in size.

The permeability factor K has dimensions of velocity and is inversely proportional to the viscosity of the gas. The results can be adjusted to elevated temperatures and to other gases by multiplying the constant K_0 by the ratio of the viscosity of air at room temperature to that of the gas at the temperature in question.

Section VI - Chutes

A chute, unlike a hopper, does not operate full of material. As an example, a transfer chute between two conveyors encloses and directs the stream of material, but discharges the material before any level accumulates.

The chute design concepts given below apply only to a fast (i.e., accelerated) flow mode in which material flows in contact with the chute bottom and side walls without contact with the top surface. A good rule of thumb is that a chute should be sized such that it is no more than one-third full in cross section over the entire chute length. If the chute fills with enough material, it may have to be considered a hopper. This case would require a proper hopper design to ensure reliable flow.

In order to maintain material flow in a chute, its inside surface walls must be steep enough and have sufficiently low friction to allow the material to flow along them. This is dictated by the friction between the chute surface and the bulk material. This friction is dependent upon the roughness of the surface and the impact pressure caused by the material hitting it.

The chute angle test measures the critical chute angles required for cleanoff as a function of impact pressure for the limiting case where the material adheres to the surface. These angles are used to determine the minimum chute angle required at an impact point to overcome adhesion and ensure flow.

The test consists of loading a sample of the bulk solid on a representative coupon of the chute surface with a range of loads to represent different impact pressures. After each load is applied for a few seconds, the load is removed and the coupon is inclined about a distant pivot point. The angle at which the bulk solid slides is plotted as a function of impact pressure. Results are given in Section VI of the test report.

The impact pressure, σ, may be approximated using the following formula:

$$\sigma = \text{impact pressure} = \frac{\gamma V_1^2 \sin^2\theta}{g} \qquad (9)$$

where:

γ = bulk density (pcf)

V_1 = velocity before impact (for the case of a simple freefall, $V_1^2 = 2gh$), (ft/s)

θ = angle of impact between incoming stream and chute surface (degrees)

g = acceleration due to gravity (32.2 ft/s^2)

A factor of 5° to 10° should be added to the highest measured value given to ensure cleanoff.

Other design considerations include: controlling the particle stream, minimizing (de)accelerations of particles, minimizing wear and power requirements on downstream conveyors, minimizing abrasive wear of the chute itself, controlling dust, minimizing attrition. For additional information on many of these considerations, see Jenike & Johanson's paper #145, "Design Principles for Chutes to Handle Bulk Solids.

GLOSSARY OF TERMS AND SYMBOLS

Arching	- a no-flow condition in which material forms a stable arch (dome, bridge) across the bin
Bin	- container for bulk solids with one or more outlets for withdrawal, either by gravity alone or by flow-promoting devices which assist gravity
Bunker	- same as bin, often used in reference to storing coal
Chute	- means of collecting material which, unlike a hopper, does not operate full
Cylinder	- vertical part of a bin
Discharger	- device used to enhance material flow from a bin but which is not capable of controlling the rate of withdrawal
Effective Head	- convenient way to express consolidating pressure by dividing it by bulk density; see eqs. (1) and (2)
Elevator	- same as bin, often used in reference to storing grains
Expanded flow	- flow pattern that is a combination of mass flow and funnel flow
Feeder	- device for controlling the rate of withdrawal of bulk solid from a bin
Flow channel	- space in a bin through which a bulk solid is actually flowing during withdrawal
Flooding, flushing	- condition where an aerated bulk solid behaves like a fluid and flows uncontrollably through an outlet or feeder
Funnel flow	- flow pattern in which solid flows in a channel formed within stagnant material
Hopper	- converging part of a bin
Mass flow	- flow pattern in which all solid in a bin is in motion whenever any of it is withdrawn
Piping	- same as ratholing
P-FACTOR	- the ratio of the applied solids compacting pressure to the solids pressure during steady gravity flow; see eqs. (3) to (6)
Ratholing	- a no-flow condition in which material forms a stable vertical hole within the bin
Silo	- same as bin

A	- area of impact of falling stream of solids, area over which external load is applied, or area of outlet, ft^2
a	- acceleration along a chute surface, ft/sec^2; see eq. (11)
a_z, a_y -	vertical and horizontal accelerations, respectively, ft/sec^2
B	- span across a bin at any elevation of the bin, ft.
BC	- minimum diameter of a circular outlet in a mass flow bin, ft.
BF	- minimum width of a rectangular outlet in a funnel flow bin, ft.
BP	- minimum width of an oval outlet in a mass flow bin, ft.
D	- diameter of cylindrical portion of a bin, ft.
DF	- critical ratholing (piping) dimension, ft.
EH	- effective consolidating head, ft.
F	- force from an external load on material, lb.
f_c	- unconfined compressive strength of a solid, psf
g	- gravitational constant = 32.2 ft/sec^2
H	- height of cylinder, ft.
h	- height of fall of material, ft.
k	- ratio of horizontal to vertical pressure
K	- permeability, ft/sec.
K_0	- permeability constant, ft/sec.
L	- length of hopper outlet, ft.
m	- parameter equal to 0 for rectangular outlet and equal to 1 for circular or square outlet
p	- liquid or gas pressure, psf
Q	- maximum discharge rate of a coarse solid, lb/sec.
R	- hydraulic radius, ft.
S	- shearing force applied to a shear cell, lb.; distance along chute surface, ft.
V	- normal force applied to a shear cell, lb.

V_1	- velocity of stream of particles just before impact on a chute surface, ft/sec.
W	- width of rectangular bin cylinder, ft.
w	- weight flow rate into the bin, lb/sec.
y	- horizontal coordinate, ft.
z	- vertical coordinate, ft.
γ, GAMMA	- bulk density, pcf
δ, DELTA	- effective angle of internal friction of a solid during flow, degrees
θ	- impact angle on chute surface, degrees
θ_c, THETA-C	- maximum recommended angle (from vertical) of conical hoppers and end walls of transition hoppers for mass flow, degrees
θ_p, THETA-P	- maximum recommended angle (from vertical) of side walls of transition or wedge-shaped hoppers for mass flow, degrees
μ, MU	- tan (PHI-PRIME)
σ, SIGMA	- normal stress applied to a shear cell, psf
σ_1, SIGMA1	- major consolidating pressure, psf
τ, TAU	- shearing stress applied to a shear cell, psf
ϕ', PHI-PRIME	- kinematic angle of friction between a solid and a wall, degrees
ϕ, PHI	- angle of internal friction of a solid in incipient flow, degrees

JENIKE & JOHANSON

5164-2

TECHNICAL PAPERS REFERENCE

Bin and Feeder Design

Storage & Flow of Solids – Bulletin 123, Utah Engineering Experiment Station
Hopper Design Reference Card
142. Fine Powder Flow Phenomena in Bins, Hoppers, and Processing Vessels
149. Solve Solids Flow Problems in Bins, Hoppers, and Feeders
153. Use Screw Feeders Effectively
165. Mass Flow Purge and Conditioning Vessels
197. Solve Solids Handling Problems by Retrofitting
199. Hopper Selection Guidelines
200. Feeder Selection Tips
214. Design Considerations When Silos Are Used As Processing Vessels
223. Feeding of Bulk Solids: A Review
249. Designing Storage Bins for Bulk Solids: A Step-By-Step Procedure
263. The Selection and Sizing of Bins, Hopper Outlets, and Feeders

Testing

162. Characterize Bulk Solids to Ensure Smooth Flow
179. Wall Friction: A Complex Variable in the Design of Bulk Solids Storage Systems
190. Measuring Relative Flowability of Powders
231. Benefits of Global Standards for Shear Testing
236. Understanding the Effects of Temperature on Bulk Solids Flow
258. A Preliminary Investigation Concerning the Effect of Particle Shape on a Powder's Flow Properties
276. Measuring Powder-Flow Properties

Chutes

145. Design Principles for Chutes to Handle Bulk Solids
181. Chute Design for Effective Pet Cokes Handling
250. Effective Chute Design

Case Histories

116. Bin Design Gets System Moving Again
118. Solving Soybean Meal Flow Problems
137. Consulting Firm Helps Pet Food Manufacturer Save Time and Money
168. Case Study: How Northern States Power Company Solved Handling Problems Associated with Sub-Bituminous Coal
172. Case History: Power Plant Solves a Burning Coal-flow Problem with Bunker Modifications
237. Lone Star Case History
238. Glass Quality Improved with Reduced Segregation
274. Paper Mill Tackles Material Flow Problem at Hot Lime Bin

Segregation and Blending

107. Understanding and Eliminating Particle Segregation Problems
139. In-Bin Blending Improves Process Control
161. Tumble Blending with Mass Flow Containers Improves Productivity and Quality
166. Blending and Segregation (capabilities available from Jenike & Johanson)
178. How to Mix Dry Bulk Solids and Maintain Blend Integrity
207 Analyzing and Overcoming Industrial Blending and Segregation Problems
230. Bench-Scale Segregation Tests as a Predictor of Blend Sampling Error

JENIKE & JOHANSON

5164-2

Inserts

30. The Use of Flow-Corrective Inserts in Bins
88a. Controlling Flow Patterns in Bins by Use of an Insert
119. Versatile BINSERT® System Solves Wide Range of Flow Problems

Bin Loads

157. Load Development and Structural Considerations in Silo Design
260. Silo Failures: Case Histories and Lessons Learned

Pneumatic Conveying

109. Interfacing Storage Bins with Pneumatic Conveying Systems
115. Pneumatic Conveying: Principles of Operation
174. Characterization of Dilute Gas-Solids Flows Using the Rescaled Range Analysis
180. Pneumatic Conveying Services
226. Troubleshooting Pneumatic Conveying Problems
246. Propel Your Pneumatic Conveying System to Higher Efficiency

Purge and Conditioning Vessels

165. Mass Flow Purge and Conditioning Vessels
184. Uniform Conditioning of Bulk Solids in Processing Vessels
212. Gravity Flow Processing Vessels
215. Uniform Purging of Resins in Contact Bed Purge Vessels

Stockpile Design

185. Tunnel Reclaim from Ore Stockpiles
187. Design of Stockpiles in Mining Operations

Papeles en Español

194. Diseño de Stockpiles en Operaciones Mineras
203 Velocidad Minima de Transporte en Sistemas de Transporte Neumático en Fase Diluida
255. Propiedades de Fluidez de Los Materiales Solidos A Granel
256. Almacenamiento y Flujo de Materiales Solidos a Granel
257. Diseño y Operacion de Stockpiles en Operaciones Mineras

Miscellaneous

89. Measuring and Use of Wear Properties for Predicting Life of Bulk Materials Handling Equipment
105. Ultrahigh Molecular Weight Polyethylene Abrasion Resistant Liners Facilitate Solids Flow in Hoppers
163. Identifying and Controlling Silo Vibration Mechanisms: Part I and Part II
164. Survey of Industrial Plants Handling Bulk Solids

JENIKE & JOHANSON

5164-2

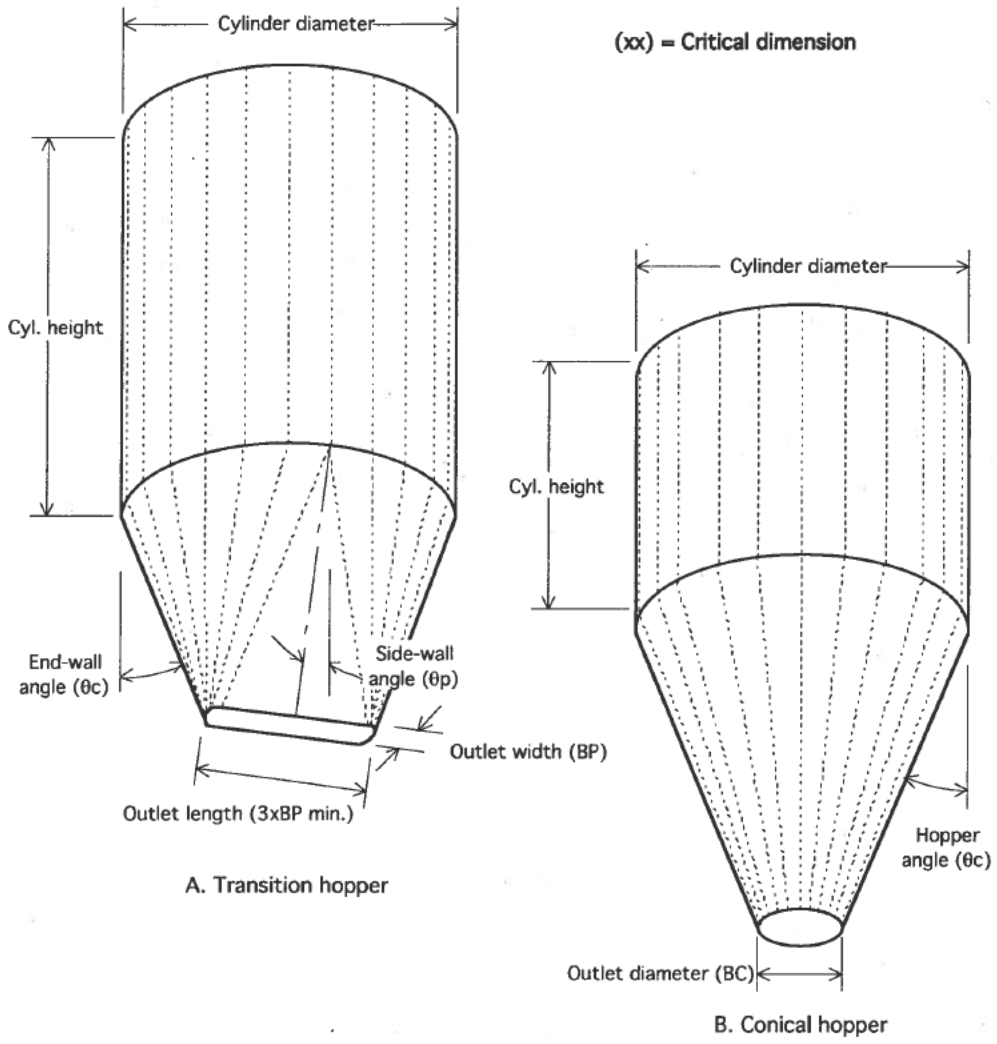

Figure A1
Examples of Mass Flow Bins

JENIKE & JOHANSON

5164-2

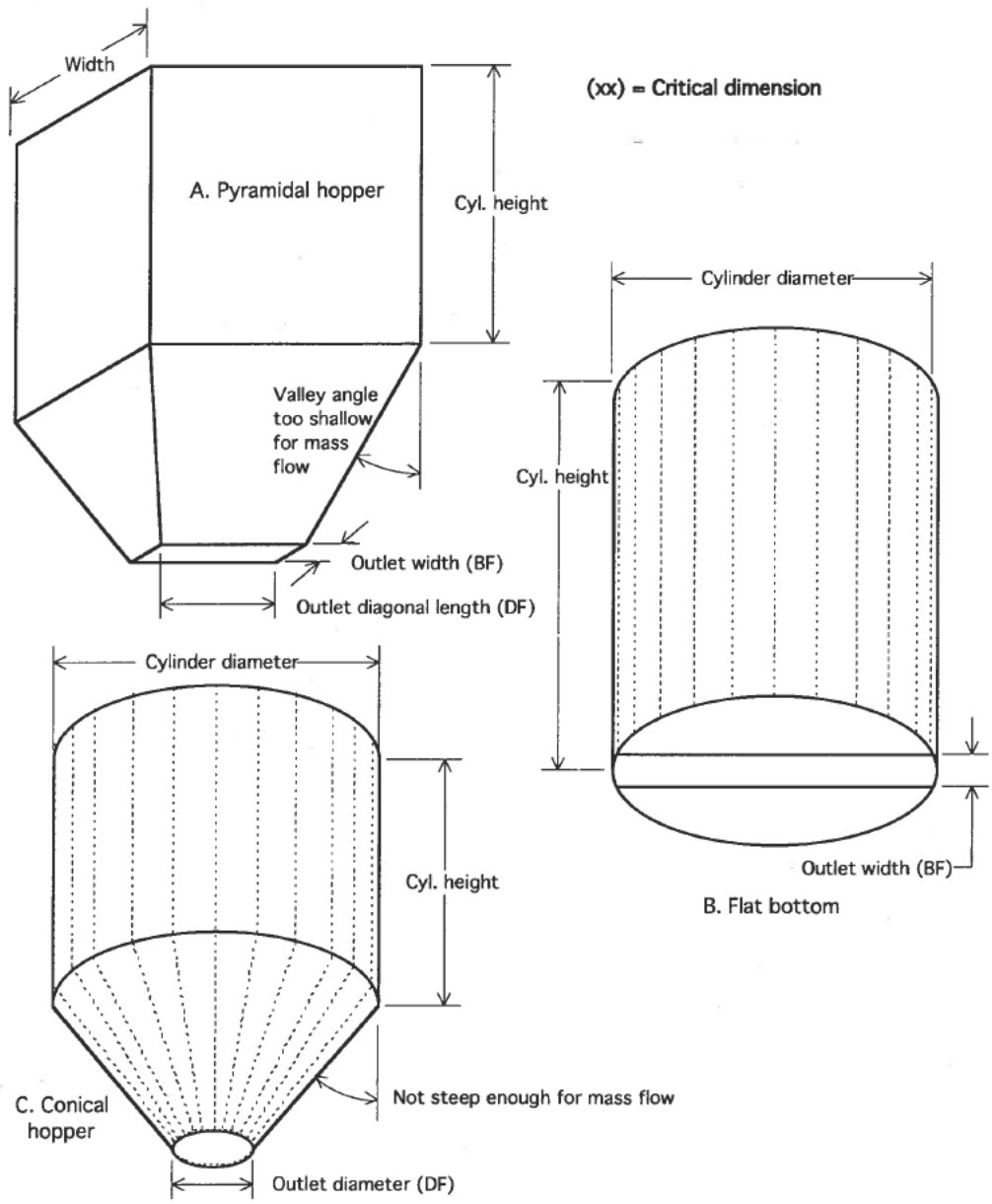

Figure A2
Examples of Funnel Flow Bins

JENIKE & JOHANSON

5164-2

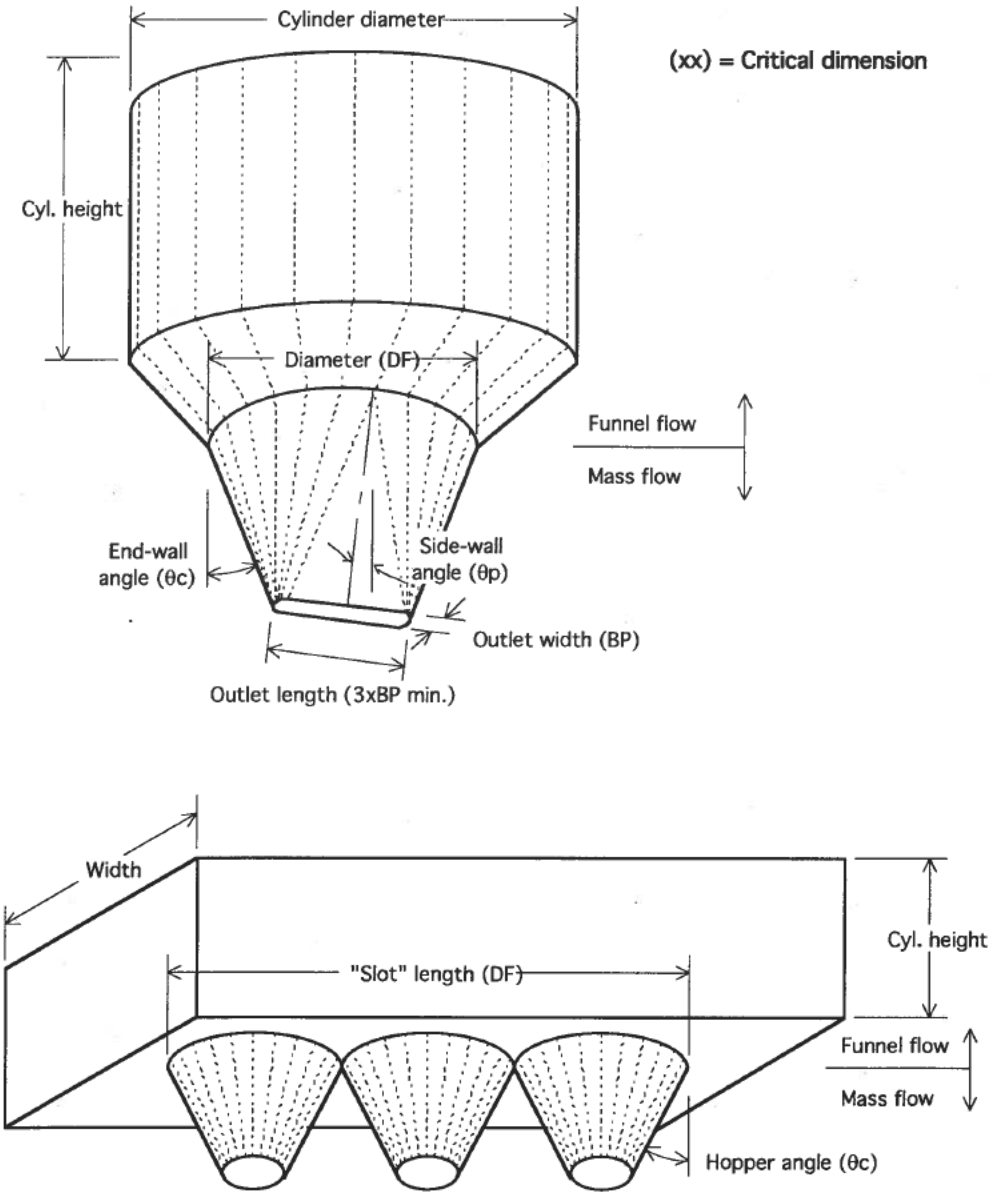

Figure A3
Examples of Expanded Flow Bins

JENIKE & JOHANSON

APPENDIX 2

Fluidization and Discharge Test Data

5164-2

JENIKE & JOHANSON

Test #	Test Type	Plenum Pressure, psi	Discharge Rate, lb/min	Gas flow, SCFM/ft^2	Comments/ Description
T01	Fluidization Characteristics	-	-	-	Fluidized well
T02	Discharge, vacuum applied to plenum prior to discharge	0, 0.29	85, 227	Varied from 0 to 0.5, 0.18 average	Material achieved discharge on opening of vale with no plenum pressure. Flow channel & funnel flow. Application of low plenum pressure increased rate dramatically. Gas flow initially high, had gone to zero by end of test (solids flow still high).
T03	Discharge, vacuum applied to plenum and 420 psf applied to top surface prior to discharge	0, 0.24	0, 229	Varied from 0.64 to 0.2 at equilibration	Material discharged little then stopped prior to application of gas pressure. After gas pressure applied flow went ot maximum, had almost equilibtraed at 0.2 scfm/ft^2 by test end.
T04	Discharge	0, 0.5	210, 430	Varied from 1.28 to 0.98 at equilibration	Material recirculated and discharged with approx 1/2 hr at rest, plenum vented, no vacuum or weights applied. Material did not deaerte, considerable discharge with no plenum pressure.
T05	Discharge	0.54	400 to 450	1.76-1.9, decreasing to 1.6 at end of test	Material consolidated with weight & vacuum for approx 1.5 hrs. Little material discharged after valve opened and before gas applied. After gas applied discharge and gas flow relatively constant.
T06	Discharge	0.9	470	3.7	Material consolidated with weight & vacuum for approx 1 hr-15 min. Little material discharged after valve opened and before gas applied. After gas applied discharge an gas flow relatively constant.
T07	Discharge	0.0, 0.26	84, 365	0, 0.7	Material consolidated with weight for approx 6 days. Material discharged at low consistent rate after valve opened and before gas applied. After gas applied discharge and gas flow relatively constant.

Client: WSRC **Test Log** Nov. 18, 2005

5164-2

JENIKE & JOHANSON

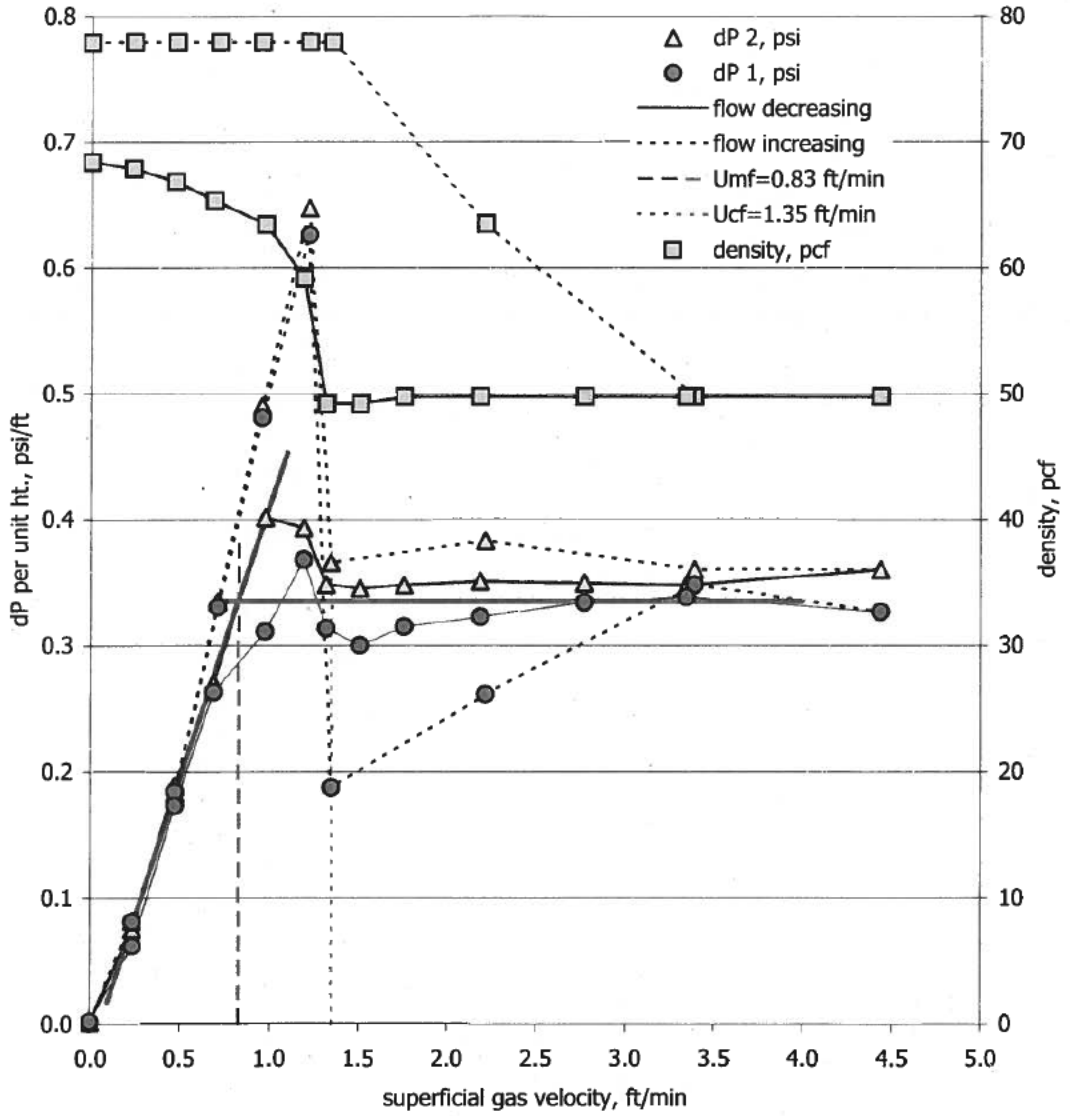

Client: WSRC
Job #: 5164
Run date and time: 11/10/2005 7:11
Material: Fly ash, Boral Class F
Test #: T01
Test type: Characteristics
Tare wt: 63.67
Test rig description: 8" column

5164-2
11/23/2005

JENIKE & JOHANSON

5164-2

Test Description: Material loaded and 1.6 psi vacuum applied to plenum for approx 15 min. Discharge started without plenum pressure, variable rate of 80 lb/min & lower achieved. Initial plug flow at top surface bbecame funnel flow at approx 4" discharged. Gas on at t=215, immediate increasein rate to approx 220 lb/min, increase in steadiness of discharge also. Terminated tet when receiving drum was full.

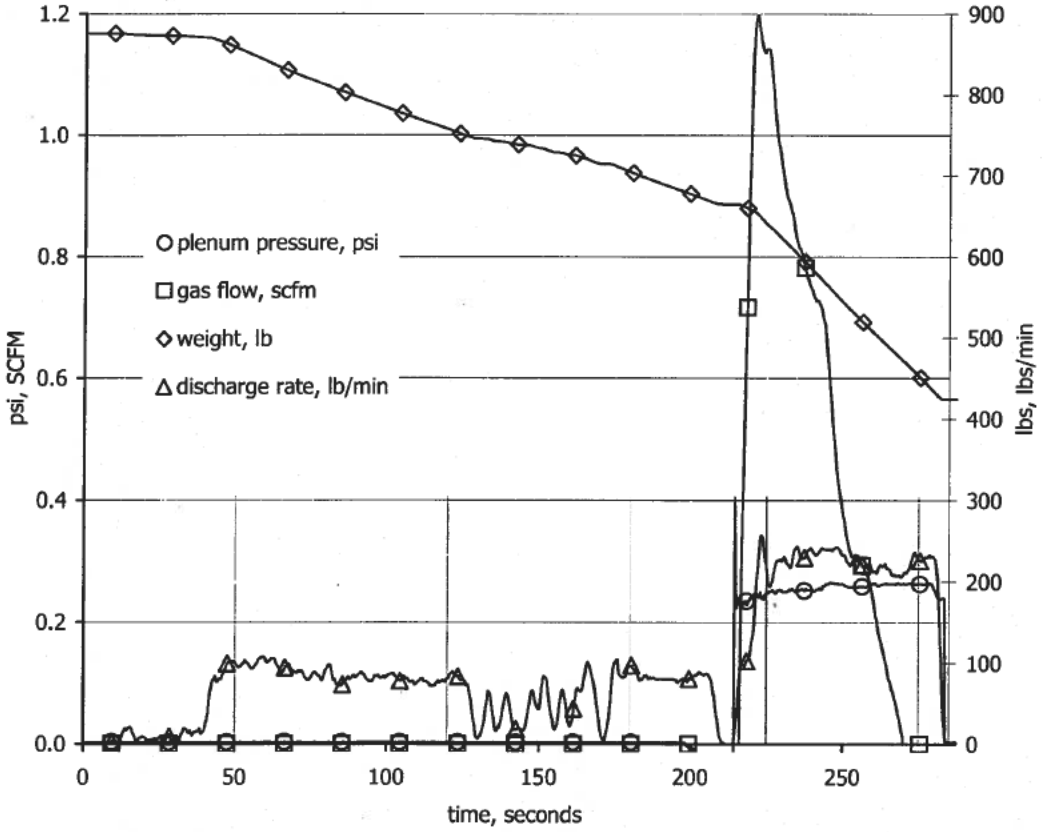

Conveying Parameter Averages for time:		plenum pressure, psi	gas flow, scfm	gas flow, SCFM/ft^2	discharge rate, lb/min				
>	<								
50	120	0.0	0.0	0.00	86.1				
180	200	0.0	0.0	0.00	81.7				
225	275	0.26	0.48	0.18	225.1				

Test #: **T02** Material: **Fly ash, Boral Class F** Job#: 5164
Test date: 11/10/05 3:50 PM Client: WSRC

JENIKE & JOHANSON

5164-2

Test Description: Repeat of T02 with time at rest overnight, approx 1100 lb consolidation wt.. Open valve, some initial discharge followed by dropping of few lbs every 5 sec or so. Applied air, discharge consistant & steady at approx. 230 lb/min after initial equilibration period.

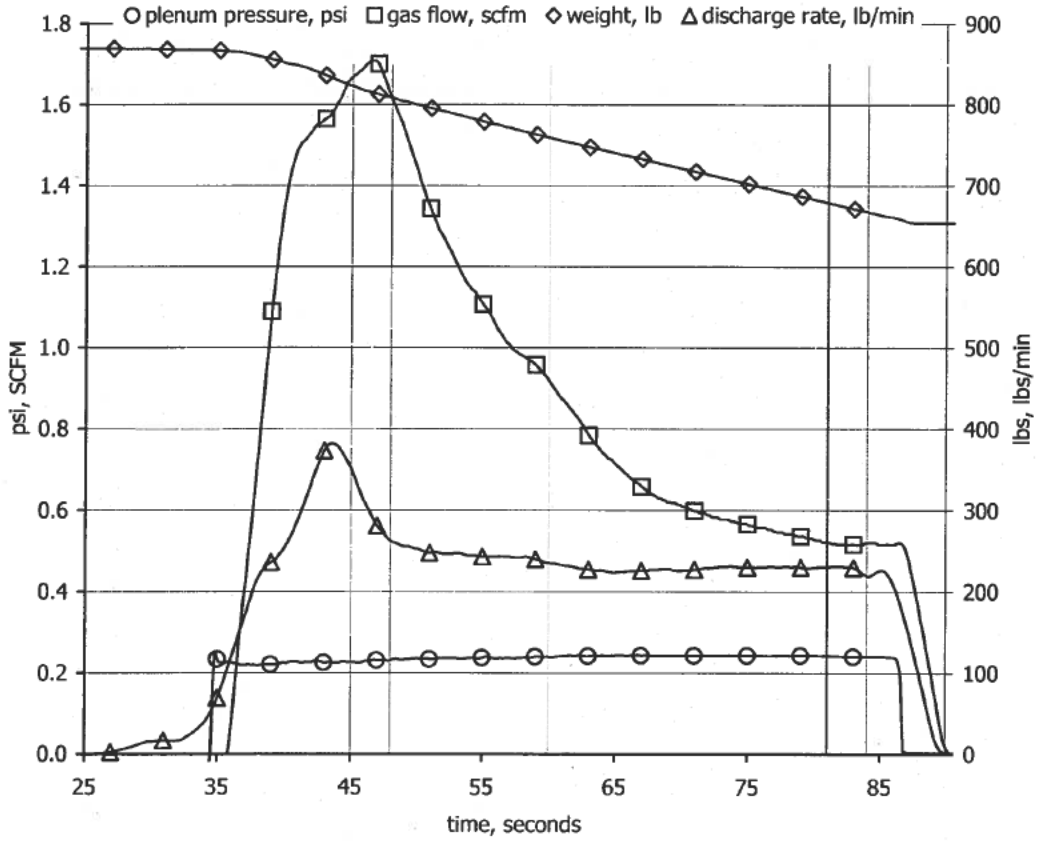

Conveying Parameter Averages for time:		plenum pressure, psi	gas flow, scfm	gas flow, SCFM/ft^2	discharge rate, lb/min				
>	<								
45	48	0.23	1.68	0.64	299.1				
60	80	0.24	0.65	0.25	228.6				
81	84	0.24	0.52	0.20	228.7				

Test #: **T03** Material: **Fly ash, Boral Class F** Job#: 5164
Test date: 11/11/05 10:45 AM Client: WSRC

JENIKE & JOHANSON

5164-2

Test Description: Repeat T03, with higher plenum presure of 0.5 psi. Material not vacuumed or pressured btw tests.

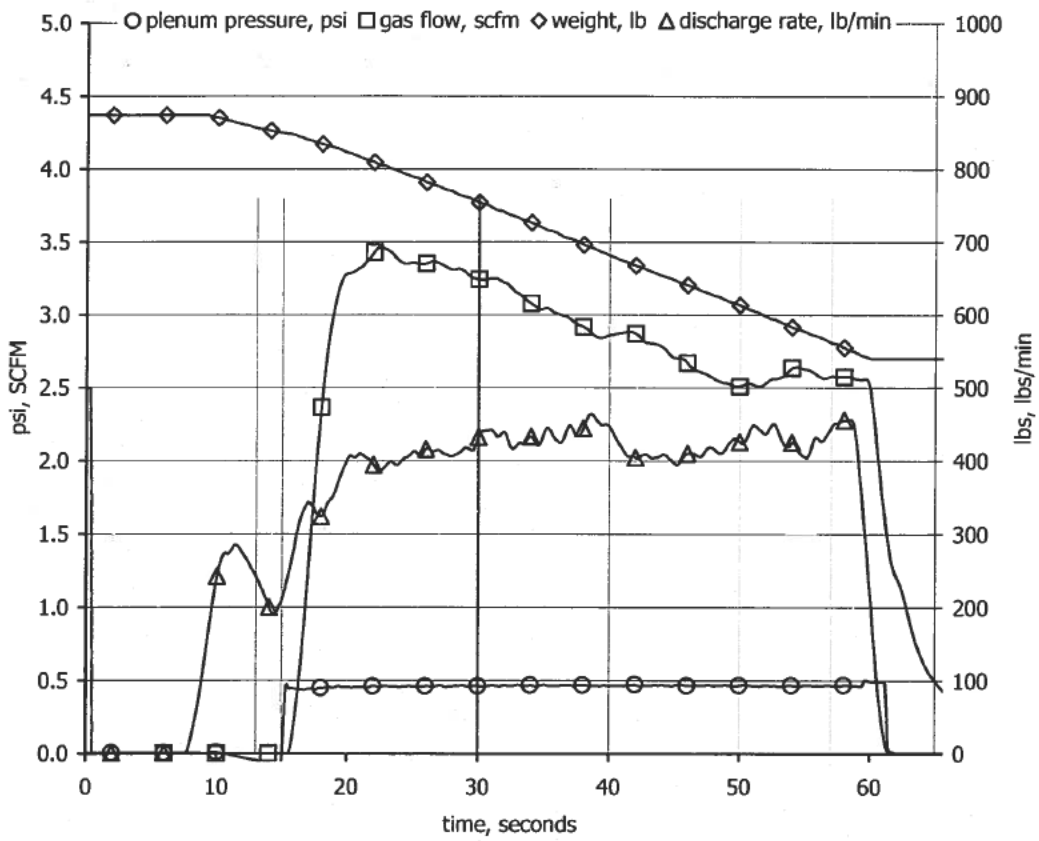

Conveying Parameter Averages for time:		plenum pressure, psi	gas flow, scfm	gas flow, SCFM/ft^2	discharge rate, lb/min				
>	<								
13	15	- 0.06	0.00	0.00	209				
20	25	0.46	3.38	1.28	400				
30	40	0.47	3.05	1.16	438				
50	57	0.47	2.57	0.98	430				

Test #: **T04** Material: **Fly ash, Boral Class F** Job#: 5164
Test date: 11/11/05 11:55 AM Client: WSRC

JENIKE & JOHANSON

5164-2

Test Description: Recirculated material fgrom **T04**. Applied weights & vacuum prior to test, for approx 1 1/2 hrs. Opened valve Before applying gas initial slug fell out, then slight raining for approx 10 sec., Applied gas. Immediate strong discharge after applying gas.

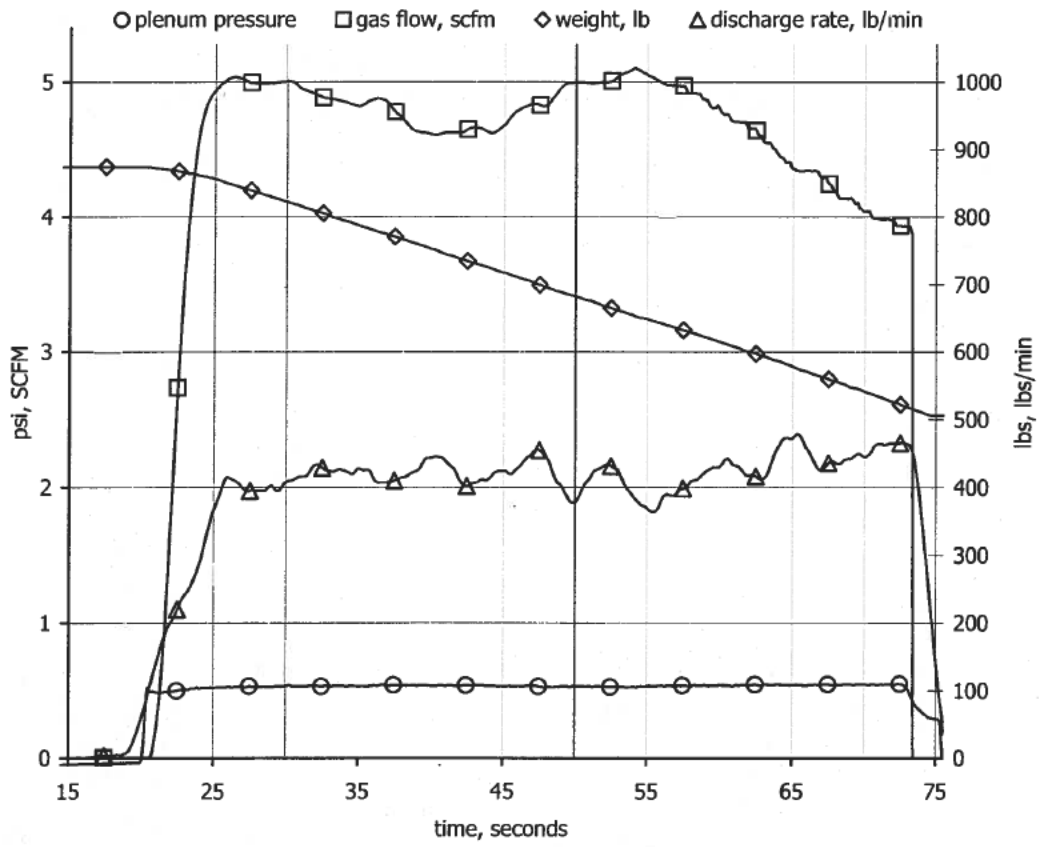

Conveying Parameter Averages for time: >	<	plenum pressure	gas flow, scfm	gas flow, SCFM/ ft^2	discharge rate, lb/min				
25	30	0.53	5.0	1.89	399				
40	45	0.54	4.6	1.76	421				
50	55	0.53	5.0	1.91	407				
65	70	0.54	4.2	1.60	446				

Test #: **T05** Material: **Fly ash, Boral Class F** Job#: 5164
Test date: 11/11/05 1:41 PM Client: WSRC

JENIKE & JOHANSON

5164-2

Test Description: Recirculated material from T05. Applied 1100 lb weights and vacuum for approx 1 hr 15 min. Removed weight & vacuum. Opened valve approx. t= 5 sec. Some material initially dropped out, then no flow for approx 15 sec. Applied gas at plenum pressure = 0.9 psi. Discharge immediate and steady until valve shut to stop flow when receiving drum full.

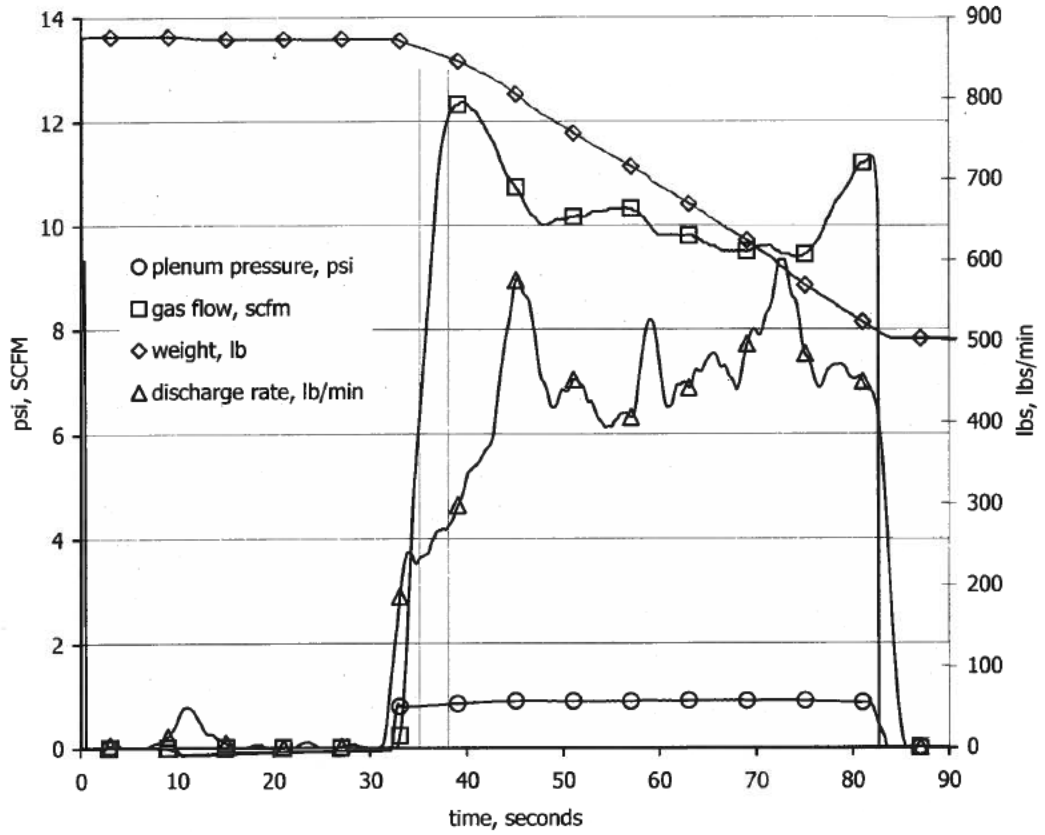

Conveying Parameter Averages for time:		plenum pressure, psi	gas flow, scfm	gas flow, SCFM/ft^2	discharge rate, lb/min				
>	<								
35	38	0.81	9.73	3.68	254				
50	75	0.89	9.84	3.73	470				

Test #: **T06** Material: **Fly ash, Boral Class F** Job#: 5164
Test date: 11/11/05 3:13 PM Client: WSRC

JENIKE & JOHANSON

5164-2

Test Description: Material at rest for 6 days prior to discharge , with 520 psf weight aplied to top surface and plenum vented. Discharged without gas pressure at 84 lb/min. After application of gas pressure increase in rate to 365 lb/min.

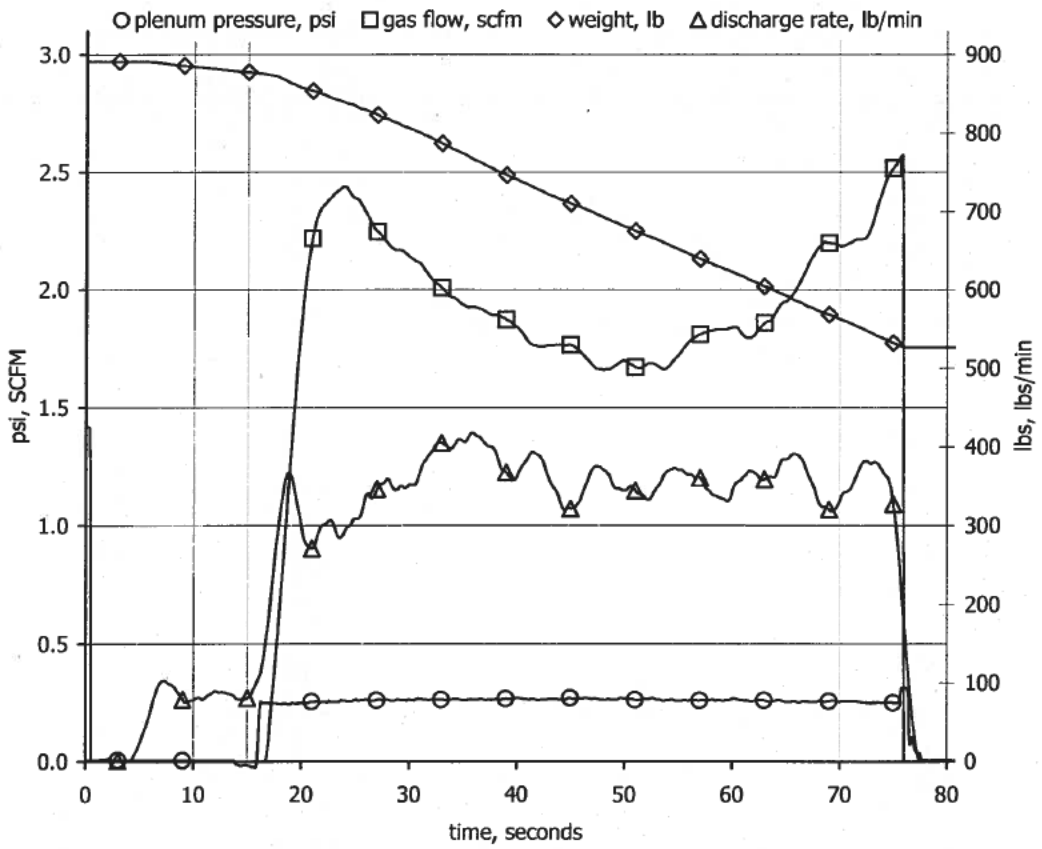

Conveying Parameter Averages for time: >	<	plenum pressure, psi	gas flow, scfm	gas flow, SCFM/ft^2	discharge rate, lb/min				
10	15	0.00	0.00	0.00	83.6				
30	70	0.26	1.86	0.70	364.5				

Test #: **T07** Material: **Fly ash, Boral Class F** Job#: 5164
Test date: 11/17/05 2:36 PM Client: WSRC

BEST AVAILABLE COPY

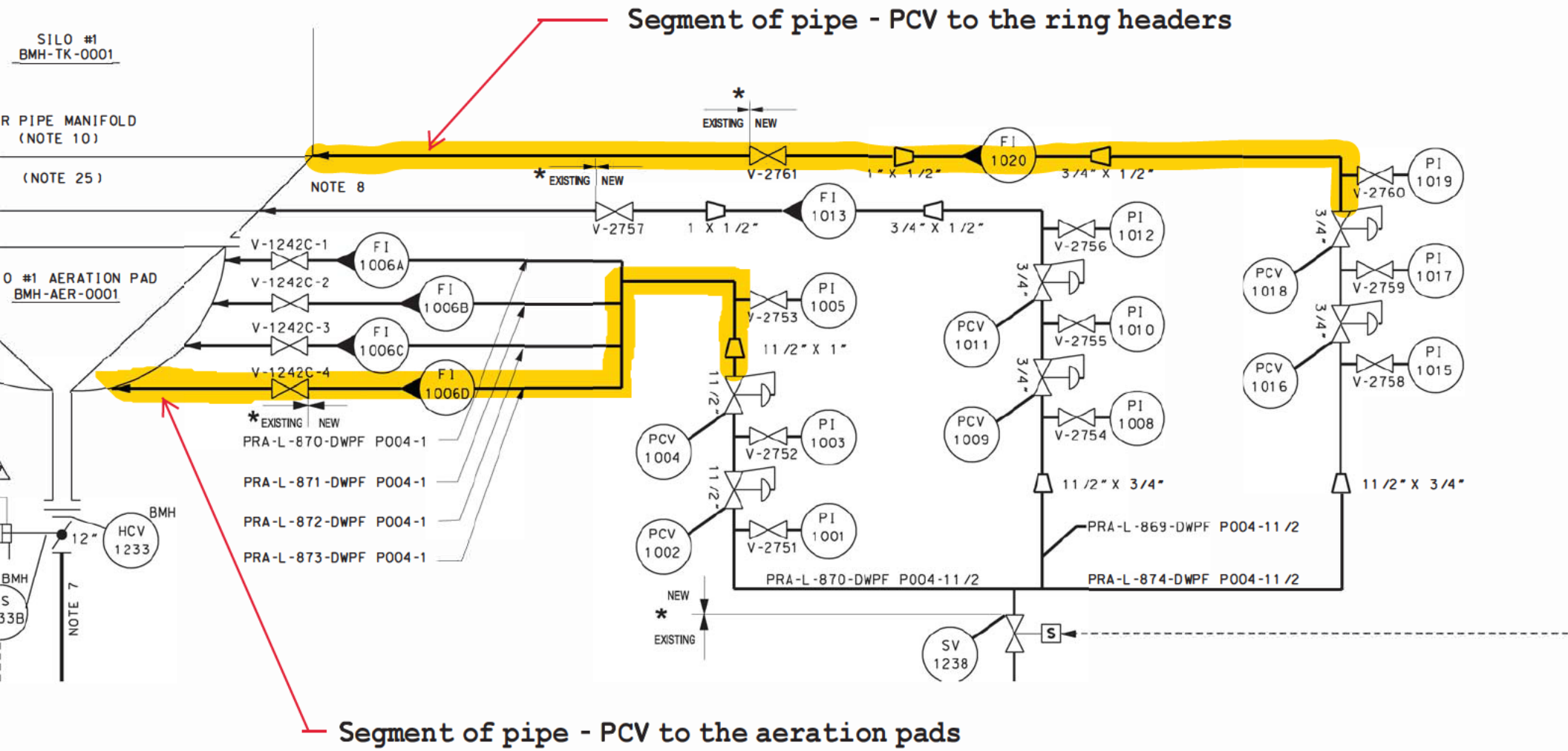

Product Specifications - Capacity Tables, 3809/3810

METER SIZE	CONNECTION SIZE DIN DN mm	CONNECTION SIZE ANSI inches	FLOAT CODE	FLOAT MATERIAL STAINLESS STEEL 316L, TITANIUM FLOAT METER SIZE 0 WATER [3] l/h	WATER gph	AIR [1,2] scfh	AIR nl/h	Press Drop mbar	Press Drop inches WC	VIC (cSt) (cSt)	Max. Visc (cSt)	PED Category
0	15	1/2"	0	0.96	0.25	1.6	44	12	5	1	5	SEP
1			0	1.3	0.34	2.1	59	12	5	1	10	SEP
2			0	3.6	0.96	4.9	130	12	5	1	20	SEP
3			0	10	2.8	12	350	12	5	1	35	SEP
4			0	21	5.5	23	650	32	13	1	70	SEP
5			0	42	11	53	1400	38	15	1	100	SEP

1. Air flows in scfh are given at 70°F and 14.7 psia 2. Air flows in nl/h are given at 0°C and 1.013 bar (a) 3. Water flows in l/h & gpm are given at 70°F

METER SIZE	CONNECTION SIZE DIN DN mm	CONNECTION SIZE ANSI inches	FLOAT CODE	FLOAT MATERIAL STAINLESS STEEL 316L WATER [4] l/h	WATER gpm	AIR [1,2] scfm	AIR nm3/h	Press Drop mbar	Press Drop inches WC	VIC (cSt) (cSt)	Max. Visc (cSt)	PED Category
7	15	1/2"	A	25	0.11	0.49	0.8	30	13	1	40	SEP
			B*	65	0.28	1.2	2.1	30	13	1	20	SEP
			C	130	0.59	2.4	3.9	30	13	1	120	SEP
			D*	200	0.88	3.7	6.1	35	15	1	20	SEP
8	15	1/2"	A	250	1.1	5.2	8.5	45	19	2	250	SEP
			B	400	1.7	7.7	12	55	23	1	180	SEP
			C	650	2.8	11	19	60	25	2	475	SEP
			D	1000	4.4	21	35	130	53	1.5	250	SEP
10	25	1"	A	1200	5.2	19	31	60	25	5	300	CAT I, II or III
			B	1500	6.6	31	51	70	29	1.5	300	CAT I, II or III
			C	2400	10	41	68	85	35	7	300	CAT I, II or III
			D	3500	15	65	100	155	63	4	300	CAT I, II or III
12	40	1 1/2"	A	4000	17	67	100	50	21	50	300	CAT I, II or III
			B	6000	26	95	150	60	25	30	300	CAT I, II or III
			C	8000	35	150	240	150	61	2	300	CAT I, II or III
			D	10000	46	210	340	300	121	2	300	CAT I, II or III
13	50	2"	A	6500	28	100	160	50	21	50	300	CAT I, II or III
			B	9500	41	160	260	60	25	50	300	CAT I, II or III
			C	12000	55	200	330	100	41	2.5	300	CAT I, II or III
			D	20000	88	390	650	300	121	1	-	CAT I, II or III
15	80	3"	A	20000	88	390	640	110	45	8	-	CAT I, II or III
			B	30000	130	550	900	140	57	7	-	CAT I, II or III
			C	40000	170	750	1200	280	113	5	-	CAT I, II or III
16	100	4"	A	49000	210	NA	NA	160	65	15	-	CAT I, II or III
			B	70000	300	NA	NA	210	85	10	-	CAT I, II or III
			C	100000	440	NA	NA	300	121	5	-	CAT I, II or III

1. Air flows in scfm are given at 70°F and 14.7 psia 2. Air flows in nm3/h are given at 0°C and 1.013 bar (a)
3. *Minimum operating pressure required 7 psig / 0.48 bar 4. Water flows in l/h & gpm are given at 70°F

FI-1013
FI-2013
FI-3013
FI-4013
FI-1020
FI-2020
FI-3020
FI-4020

FI-1006A, B, C & D
FI-2006A, B, C & D
FI-3006A, B, C & D
FI-4006A, B, C & D

Product Specifications - Capacity Tables, ETFE Lined

METER SIZE	CONNECTION SIZE DIN DN mm	CONNECTION SIZE ANSI inches	TUBE FLOAT CODE	STANDARD FLOAT MATERIAL CAPACITIES (See Note 3) WATER [5] l/h	WATER gpm	AIR [1,2,4] scfm	AIR nm3/h	Press Drop mbar	Press Drop inches WC	PED Category
7	15	1/2"	GA	110	0.48	2.2	3.7	25	11	SEP
			GB	170	0.75	3.5	5.8	50	21	SEP
8	15	1/2"	A	250	1.1	5.1	8.3	30	13	SEP
			B	420	1.8	8.5	13	45	19	SEP
			C	500	2.2	9.9	16	40	17	SEP
			D	850	3.7	18	30	130	53	SEP
10	25	1"	A	1400	6.2	27	45	45	19	CAT I, II or III
			B	2000	8.8	39	63	106	43	CAT I, II or III
			C	2400	10	47	77	90	37	CAT I, II or III
			D	3000	13	58	95	130	53	CAT I, II or III
12	40	1 1/2"	A	3000	13	58	95	50	21	CAT I, II or III
			B	4000	18	73	120	75	31	CAT I, II or III
			C	5000	22	94	150	85	35	CAT I, II or III
			D	6000	26	110	180	120	49	CAT I, II or III
13	50	2"	A	6000	26	110	180	95	39	CAT I, II or III
			B	8000	35	150	250	125	51	CAT I, II or III
			C	12000	53	220	370	200	81	CAT I, II or III
			D	15000	66	280	470	225	91	CAT I, II or III

1. Air flows in scfm are given at 70°F and 14.7 psia 2. Air flows in nm3/h are given at 0°C and 1.013 bar (a)
3. Sizes 7 & 8 floats are Hastelloy C-276 (Density = 8.94 kg/dm^3), Sizes 10, 12 & 13 are PVDF (Density = 4.22 kg/dm^3)
4. For gas applications operating pressure must be greater than 29 PSIA / 2 bar (a)
5. Water flows in l/h & gpm are given at 70°F

Definitions

Symbol		Units	Definition
K		unitless	resistance coefficient
	K_{11}		(line to ring header - 1 SCFM)
	K_{15}		(line to ring header - 5 SCFM)
	K_{25}		(line to aeration pad - 5 SCFM)
	K_{225}		(line to aeration pad - 25 SCFM)
TI		degrees Rankin	inlet temperature (absolute)
SG		unitless	specific gravity - relative to air
P		psia	pressure (absolute)
	P_1		(inlet of line to ring header)
	P_2		(inlet of line to aeration pad)
	P_3		(outlet of all lines)
ΔP		psia	pressure drop in the line
q		ft^3/hr	flow rate (standard conditions)
	q_1		(flow = 1 SCFM)
	q_5		(flow = 5 SCFM)
	q_{25}		(flow = 25 SCFM)
Y		unitless	net expansion factor
d		inches	pipe internal diameter
	d_1		smaller dia. for exp. & cont.
	d_2		larger dia. for exp. & cont.
D		feet	pipe internal diameter
	D_1		3/4" line
	D_2		1" line
ρ		lb / ft^3	weight density
	ρ_1		(line to ring header)
	ρ_2		(line to aeration pad)
W		lb / hr	flow rate
	W_{11}		(line to ring header - 1 SCFM)
	W_{15}		(line to ring header - 5 SCFM)
	W_{25}		(line to aeration pad - 5 SCFM)

	W_{225}		(line to aeration pad - 25 SCFM)
μ		centipoise	dynamic viscosity
R		unitless	Reynolds number
	R_{11}		(line to ring header - 1 SCFM)
	R_{15}		(line to ring header - 5 SCFM)
	R_{25}		(line to aeration pad - 5 SCFM)
	R_{225}		(line to aeration pad - 25 SCFM)
f		unitless	friction factor
	f_{11}		(line to ring header - 1 SCFM)
	f_{15}		(line to ring header - 5 SCFM)
	f_{25}		(line to aeration pad - 5 SCFM)
	f_{225}		(line to aeration pad - 25 SCFM)
L		feet	pipe length
	L_1		3/4" pipe (lines to ring headers)
	L_2		1" pipe (lines to ring headers)
β		unitless	ratio of pipe diameters (d_1 / d_2)

Equations

$q_h = 40700\ Y\ d^2\ (\Delta P\ P / K\ Tl\ SG)^{1/2}$ ref. 2.1 eqn. 6-28

or

$\Delta P = (K\ Tl\ SG / P)\ (q_h / 40700\ Y\ d^2)^2$

$\rho = 2.7\ P\ SG / Tl$ ref. 2.1 eqn. 6-52

$W = q_h\ \rho$

$R = 6.315\ W / d\ \mu$ ref. 2.1 eqn. 6-3

$K = f\ L / D$ (for pipe) ref. 2.1 eqn. 2-7

$K = N\ 8\ f$ (for gate valves where N is the quantity) ref. 2.1 A-28

$K = N\ 30\ f$ (for elbows where N is the quantity) ref. 2.1 A-30

$K = 0.5\ (1 - \beta^2) / \beta^4$ (sudden contraction, $\theta = 180$) ref. 2.1 A-27

$K = (1 - \beta^2)^2 / \beta^4$ (sudden expansion, $\theta = 180$) ref. 2.1 A-27

Design Input

Flow rates:
Ring headers 1 SCFM < q_h < 5 SCFM ref 2.2

Aeration pads 5 SCFM < q_h < 25 SCFM ref 2.2

Pressure - at discharge into the silo
P_3 = 0.25 psig ref 2.2

Pipe diameter	1 1/2"	(d = 1.50 in, D = 0.125 ft.)	ref 2.1 B-13
(schedule 80)	1"	(d = 0.957 in, D = 0.0798 ft)	
	3/4"	(d = 0.742 in, D = 0.0618 ft)	
	1/2"	(d = 0.546 in, D = 0.0455 ft)	

Pipe lengths:
from pressure regulator to the ring headers Input 3.1.5
L_1 = 16 ft. (3/4" pipe)
L_2 = 30 ft. +39 ft. = 69 ft. (1" pipe)

form pressure regulator to the aeration pads Input 3.1.5
L = 45 ft. (1" pipe)

Size and quantity of in-line fittings and instrumentation Input 3.1.6
(gate valves, flow indicators, reducers)

Pressure drop in flow indicators
to the ring headers: 23" WC Input 3.1.7
to the aeration pads: 29" WC Input 3.1.8

TI = 460 ^{0}R + 100 ^{0}F = 560 ^{0}R (based on assumption 3.2.1)

SG = 1.0 (for air - by definition)

μ = 0.019 cP (based on assumption 3.2.1) ref. 2.1 A-6

Calculations

Pressure - inlet to all lines (ie. at the discharge of the low pressure regulator) (psia)

Initial trial - assume setpoint of 1.2 psi for ring header regulators
and 2.8 psi for the aeration pad regulators

Ring headers

$\underline{\mathbf{P}}_1 := 14.7 + 1.2$ $\underline{\mathbf{P}}_1 = 15.9$

Aeration Pads

$\underline{\mathbf{P}}_2 := 14.7 + 2.8$ $\underline{\mathbf{P}}_2 = 17.5$

Flow Rates (ft^3/hr)

1 SCFM

$\underline{\mathbf{q}}_1 := 1 \cdot 60$ $\underline{\mathbf{q}}_1 = 60$

5 SCFM

$\underline{\mathbf{q}}_5 := 5 \cdot 60$ $\underline{\mathbf{q}}_5 = 300$

25 SCFM

$\underline{\mathbf{q}}_{25} := 25 \cdot 60$ $\underline{\mathbf{q}}_{25} = 1.5 \times 10^3$

Net Expansion Factor (unitless)

Initial trial - assume:	$15.9 < P < 17.5$	(inlet pressure)
	$1.0 < \Delta P < 2.0$	(pressure drop in the line)
	$25 < K < 40$	(total resistance coefficient)

Y = 0.96 ref 2.2 A-23

Specific Gravity (unitless)

$\underline{\mathbf{SG}} := 1.0$

Inlet Temperature (^0R)

$\underline{\mathbf{TI}} := 460 + 100$ $\underline{\mathbf{TI}} = 560$

Air Density (lb / ft^3)

Ring headers

$\rho_1 := 2.7 \cdot P_1 \cdot \frac{SG}{TI}$ $\rho_1 = 0.077$ ref. 2.1 eqn. 6-52

Aeration pads

$\rho_2 := 2.7 \cdot P_2 \cdot \frac{SG}{TI}$ $\rho_2 = 0.084$

Flow Rates (lb / hr)

Ring header

1 SCFM

$W_{11} := q_{(1)} \cdot \rho_1$ $W_{11} = 4.6$

5 SCFM

$W_{15} := q_5 \cdot \rho_1$ $W_{15} = 22.998$

Aeration Pads

5 SCFM

$W_{25} := q_5 \cdot \rho_2$ $W_{25} = 25.312$

25 SCFM

$W_{225} := q_{25} \cdot \rho_2$ $W_{225} = 126.562$

Reynolds Number (unitless) and Friction factor (unitless)

$\mu := 0.019$ $d := 0.957$ $D := 0.0798$

Ring header

1 SCFM

$R_{11} := 6.315 \cdot \frac{W_{11}}{d \cdot \mu}$ $R_{11} = 1.597 \times 10^3$ (laminar flow)

$f_{11} := \frac{64}{R_{11}}$ $f_{11} = 0.04$ Ref. 2.1 eqn. 6-4

5 SCFM

$\underline{R}_{15} := 6.315 \cdot \frac{\underline{W}_{15}}{\underline{d} \cdot \underline{\mu}}$ $\underline{R}_{15} = 7.987 \times 10^{3}$

$\underline{f}_{15} := 0.035$ ref. 2.1 A-26

Aeration Pads

5 SCFM

$\underline{R}_{25} := 6.315 \cdot \frac{\underline{W}_{25}}{\underline{d} \cdot \underline{\mu}}$ $\underline{R}_{25} = 8.791 \times 10^{3}$

$\underline{f}_{25} := 0.035$ ref. 2.1 A-26

25 SCFM

$\underline{R}_{225} := 6.315 \cdot \frac{\underline{W}_{225}}{\underline{d} \cdot \underline{\mu}}$ $\underline{R}_{225} = 4.396 \times 10^{4}$

$\underline{f}_{225} := 0.027$ ref. 2.1 A-26

Resistance Coefficient (unitless)
Pipe

Ring headers

$\underline{L}_1 := 16$ $\underline{L}_2 := 69$

$\underline{D}_1 := 0.0618$ $\underline{D}_2 := 0.0798$

1 SCFM

$\underline{K}_{11} := \underline{f}_{11} \cdot \left(\frac{\underline{L}_1}{\underline{D}_1} + \frac{\underline{L}_2}{\underline{D}_2} \right)$ $\underline{K}_{11} = 45.014$

5 SCFM

$\underline{K}_{15} := \underline{f}_{15} \cdot \left(\frac{\underline{L}_1}{\underline{D}_1} + \frac{\underline{L}_2}{\underline{D}_2} \right)$ $\underline{K}_{15} = 39.325$

Aeration Pads

$\underline{L} := 45$ $\underline{D} := 0.0798$

5 SCFM

$\underline{K}_{25} := \underline{f}_{25} \cdot \frac{\underline{L}}{\underline{D}}$ $\underline{K}_{25} = 19.737$

25 SCFM

$\underline{K}_{225} := \underline{f}_{225} \cdot \frac{\underline{L}}{\underline{D}}$ $\underline{K}_{225} = 15.226$

Resistance Coefficient (unitless)
Gate Valve

$\underline{N} := 1$

Ring headers
1 SCFM

$\underline{K}_{11} := \underline{N} \cdot 8 \cdot \underline{f}_{11}$ $\underline{K}_{11} = 0.321$

5 SCFM

$\underline{K}_{15} := \underline{N} \cdot 8 \cdot \underline{f}_{15}$ $\underline{K}_{15} = 0.28$

Aeration Pads
5 SCFM

$\underline{K}_{25} := \underline{N} \cdot 8 \cdot \underline{f}_{25}$ $\underline{K}_{25} = 0.28$

25 SCFM

$\underline{K}_{225} := \underline{N} \cdot 8 \cdot \underline{f}_{225}$ $\underline{K}_{225} = 0.216$

Resistance Coefficient (unitless)
Elbows

Ring headers $\underline{N} := 10$
1 SCFM

$\underline{K}_{11} := \underline{N} \cdot 30 \cdot \underline{f}_{11}$ $\underline{K}_{11} = 12.019$

5 SCFM

$\underline{K}_{15} := \underline{N} \cdot 30 \cdot \underline{f}_{15}$ $\underline{K}_{15} = 10.5$

Aeration Pads $\underline{N} := 11$
5 SCFM

$\underline{K}_{25} := \underline{N} \cdot 30 \cdot \underline{f}_{25}$ $\underline{K}_{25} = 11.55$

25 SCFM

$\underline{K}_{225} := \underline{N} \cdot 30 \cdot \underline{f}_{225}$ $\underline{K}_{225} = 8.91$

Resistance Coefficient (unitless)
Contraction (sudden, θ = 180⁰)
1 1/2" to 1"

$\underline{d}_1 := 1.049$ $\underline{d}_2 := 1.61$ $\underline{\beta} := \frac{\underline{d}_1}{\underline{d}_2}$ $\underline{\beta} = 0.652$

$\underline{K} := 0.5 \cdot \frac{\left(1 - \underline{\beta}^2\right)}{\underline{\beta}^4}$ $\underline{K} = 1.597$

1" to 3/4"

$\underline{d}_1 := 0.824$ $\underline{d}_2 := 1.049$ $\underline{\beta} := \frac{\underline{d}_1}{\underline{d}_2}$ $\underline{\beta} = 0.786$

$\underline{K} := 0.5 \cdot \frac{\left(1 - \underline{\beta}^2\right)}{\underline{\beta}^4}$ $\underline{K} = 0.503$

3/4" to 1/2"

$\underline{d}_1 := 0.622$ $\underline{d}_2 := 0.824$ $\underline{\beta} := \frac{\underline{d}_1}{\underline{d}_2}$ $\underline{\beta} = 0.755$

$\underline{K} := 0.5 \cdot \frac{\left(1 - \underline{\beta}^2\right)}{\underline{\beta}^4}$ $\underline{K} = 0.662$

Resistance Coefficient (unitless)
Expansion (sudden, θ = 180⁰)
1" to 1 1/2"

$\underline{d}_1 := 1.049$ $\underline{d}_2 := 1.61$ $\underline{\beta} := \frac{\underline{d}_1}{\underline{d}_2}$ $\underline{\beta} = 0.652$

$\underline{K} := \frac{\left(1 - \underline{\beta}^2\right)^2}{\underline{\beta}^4}$ $\underline{K} = 1.838$

3/4" to 1"

$d_1 := 0.824$ $d_2 := 1.049$ $\beta := \frac{d_1}{d_2}$ $\beta = 0.786$

$K := \frac{(1-\beta^2)^2}{\beta^4}$ $K = 0.385$

1/2" to 3/4"

$d_1 := 0.622$ $d_2 := 0.824$ $\beta := \frac{d_1}{d_2}$ $\beta = 0.755$

$K := \frac{(1-\beta^2)^2}{\beta^4}$ $K = 0.57$

Resistance Coefficient (unitless)
Exit

K = 1.0 ref. 2.1 A-38

Pressure Drop and Regulator Setpoint

$TI := 560$ $SG := 1.0$ $Y := 0.97$ $d := 0.957$

Ring headers
1 SCFM

K values:

K_{pipe}	= 45.01
$K_{gate\ valve}$	= 0.32
K_{elbows}	= 12.02
$K_{cont\ 1\text{-}3/4}$	= 0.50
$K_{cont\ 3/4\text{-}1/2}$	= 0.66
$K_{exp\ 1/2\text{-}3/4}$	= 0.57
$K_{exp\ 3/4\text{-}1}$	= 0.38
K_{exit}	= 1.0

$K_4 := 45.01 + 0.32 + 12.02 + 0.5 + 0.66 + 0.57 + 0.38 + 1.0$

$K_4 = 60.46$

$\underline{P}_1 := 15.9$

$\underline{q}_1 := 60$

$$\underline{\Delta P}_1 := \left(\underline{K}_4 \cdot \underline{TI} \cdot \frac{\underline{SG}}{\underline{P}_1}\right) \cdot \left(\frac{\underline{q}_1}{40700 \cdot \underline{Y} \cdot \underline{d}^2}\right)^2 \qquad \underline{\Delta P}_1 = 5.864 \times 10^{-3}$$

Pressure drop through the flow indicator

$\underline{\Delta P}_2 := 0.85$

Total pressure drop in the line

$\underline{\Delta P}_4 := \underline{\Delta P}_1 + \underline{\Delta P}_2 \qquad \underline{\Delta P}_4 = 0.856$

Setpoint pressure

$\underline{SP} := \underline{\Delta P}_4 + 0.25 \qquad \underline{SP} = 1.106$

Ring headers
5 SCFM

K values:

K_{pipe}	= 39.33
$K_{gate\ valve}$	= 0.28
K_{elbows}	= 10.5
$K_{cont\ 1\text{-}3/4}$	= 0.50
$K_{cont\ 3/4\text{-}1/2}$	= 0.66
$K_{exp\ 1/2\text{-}3/4}$	= 0.57
$K_{exp\ 3/4\text{-}1}$	= 0.38
K_{exit}	= 1.0

$\underline{K}_4 := 39.33 + 0.28 + 10.5 + 0.5 + 0.66 + 0.57 + 0.38 + 1.0$

$\underline{K}_4 = 53.22$

$\underline{P}_1 := 15.9$

$\underline{q}_5 := 300$

$$\underline{\Delta P}_1 := \left(\underline{K}_4 \cdot \underline{TI} \cdot \frac{\underline{SG}}{\underline{P}_1}\right) \cdot \left(\frac{\underline{q}_5}{40700 \cdot \underline{Y} \cdot \underline{d}^2}\right)^2 \qquad \underline{\Delta P}_1 = 0.129$$

Pressure drop through the flow indicator

$\Delta P_2 := 0.85$

Total pressure drop in the line

$\Delta P_4 := \Delta P_1 + \Delta P_2$ $\Delta P_4 = 0.979$

Setpoint pressure

$SP := \Delta P_4 + 0.25$ $SP = 1.229$

Aeration Pads
5 SCFM

K values:

K_{pipe}	= 19.7
$K_{gate\ valve}$	= 0.28
K_{elbows}	= 11.55
K_{exit}	= 1.0

$K_4 := 19.7 + 0.28 + 11.55 + 1.0$

$K_4 = 32.53$

$P_2 := 17.5$

$q_5 := 300$

$$\Delta P_1 := \left(K_4 \cdot TI \cdot \frac{SG}{P_2}\right) \cdot \left(\frac{q_5}{40700 \cdot Y \cdot d^2}\right)^2 \qquad \Delta P_1 = 0.072$$

Pressure drop through the flow indicator

$\Delta P_2 := 1.07$

Total pressure drop in the line

$\Delta P_4 := \Delta P_1 + \Delta P_2$ $\Delta P_4 = 1.142$

Setpoint pressure

$SP := \Delta P_4 + 0.25$ $SP = 1.392$

Aeration Pads
25 SCFM

K values:

K_{pipe}	= 15.2
$K_{gate\ valve}$	= 0.22
K_{elbows}	= 8.91
K_{exit}	= 1.0

$\underline{K}_4 := 15.2 + 0.22 + 8.91 + 1.0$

$\underline{K}_4 = 25.33$

$\underline{P}_2 := 17.5$

$\underline{q}_{25} := 1500$

$$\underline{\Delta P}_1 := \left(\underline{K}_4 \cdot \underline{TI} \cdot \frac{\underline{SG}}{\underline{P}_2}\right) \cdot \left(\frac{\underline{q}_{25}}{40700 \cdot \underline{Y} \cdot \underline{d}^2}\right)^2 \qquad \underline{\Delta P}_1 = 1.395$$

Pressure drop through the flow indicator

$\underline{\Delta P}_2 := 1.07$

Total pressure drop in the line

$\underline{\Delta P}_4 := \underline{\Delta P}_1 + \underline{\Delta P}_2 \qquad \underline{\Delta P}_4 = 2.465$

Setpoint pressure

$\underline{SP} := \underline{\Delta P}_4 + 0.25 \qquad \underline{SP} = 2.715$

Design Change Notice (DCN)

DCP Number	Revision	
M-DCP-Z-11003	1	
DCN No. M-DCP-Z-11003-E-00001	**Revision** 1	**Project/Task No** N/A

Design Change Notice (DCN)

Classification Reviewer: N/A

Date: 05/22/2019

Design Change Notice (DCN)

DCP Number	Revision	
M-DCP-Z-11003	1	
DCN No.	**Revision**	**Project/Task No**
M-DCP-Z-11003-E-00001	1	N/A

Document No. (Doc Rev)
W774028;9

Reason for Change (Be specific)
Determinate wiring for HCV-1282/1283/1284/1285

Description of Change
Modify wiring to remove HCV-1282/1283/1284/1285 and Air Canon solenoids and wire them as per attached pages.

Note to Construction: Cable splicing is permitted per Engineering Guide 16052-G, section 5.4.7. Field can splice cables as needed in LOS or any other equipment enclosure and field devices. Field to document each splicing in PDMS cards.

Rev.1: Air Canon solenoids will not be installed and replaced with pneumatically operated valves. Wiring associated with solenoids will not be installed and DCN is being updated to delete the wiring as per attached pages.

Engineering Approvals

Originator	Date	Responsible Engineer Manager	Date
MADKAN, RANBIR K.	05/20/2019	CAUGHMAN, CRAIG A.	05/22/2019

Verifier/Checker	Date	Discipline
CHAWLA, SANJAY	05/22/2019	E-ELECTRICAL

Verification Method(s)
Design Check (GS/PS only)

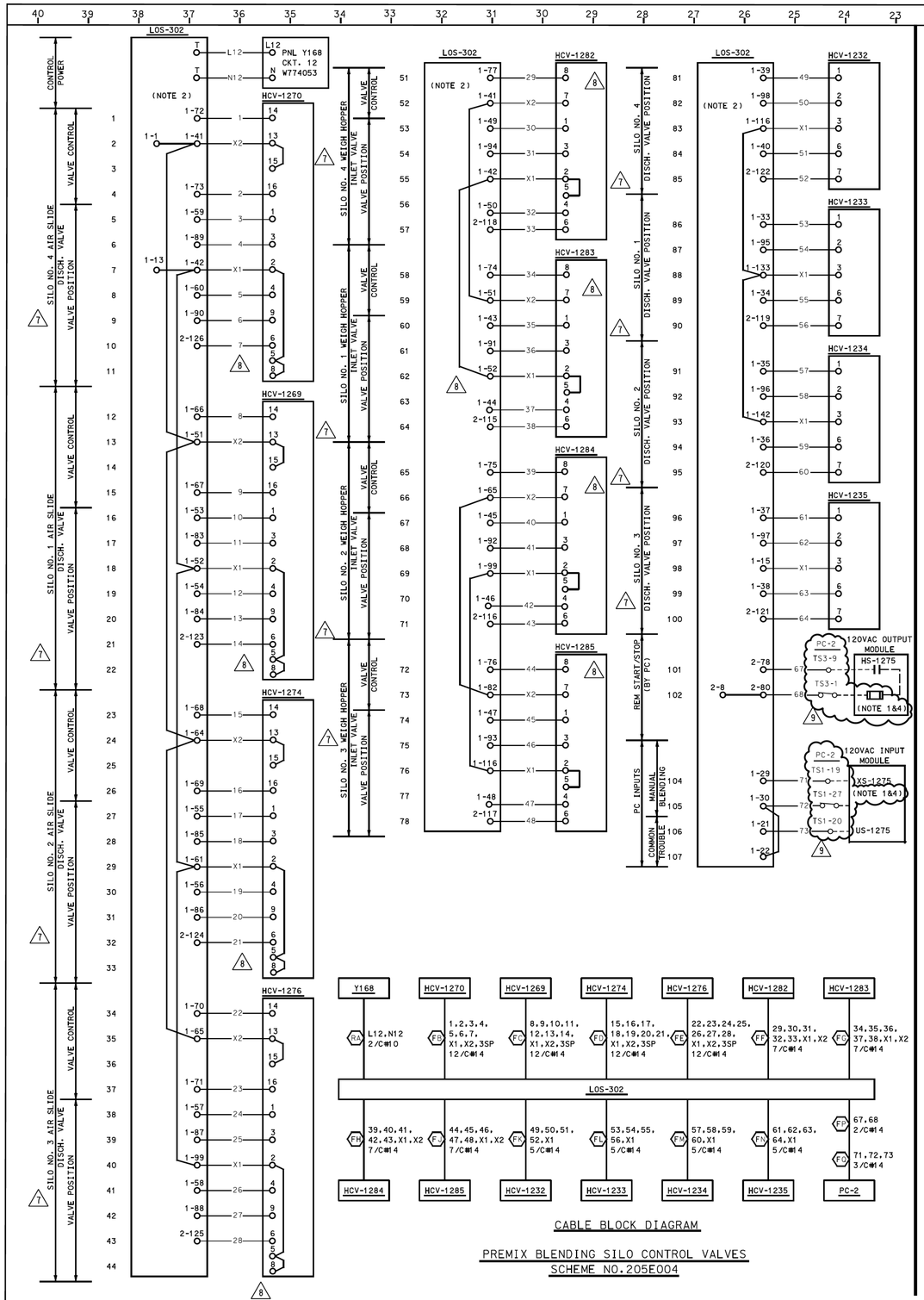

CABLE BLOCK DIAGRAM

PREMIX BLENDING SILO CONTROL VALVES
SCHEME NO.205E004

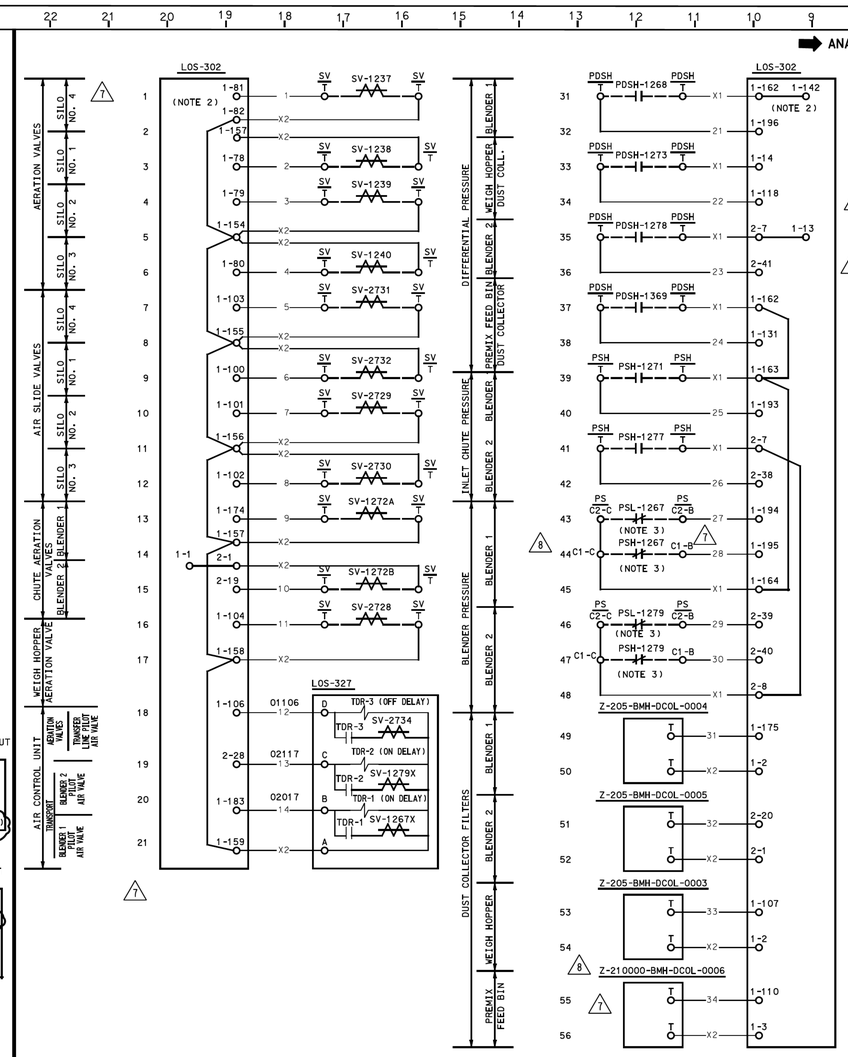

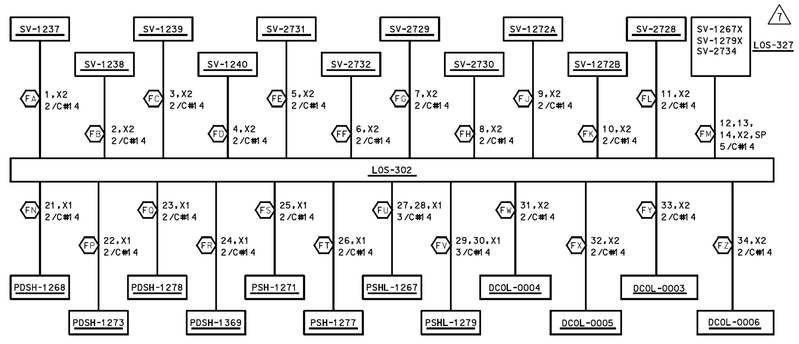

CABLE BLOCK DIAGRAM

PREMIX BLENDING AIR SYSTEM
SCHEME NO.205E005

ANALYZE FOR SAFETY, ECOLOGY, AND MINIMUM ESSENTIAL DESIGN

NOTES

1. FOR DELTA V DCS I/O MODULE IDENTIFICATION AND TERMINAL NUMBERS SEE J-JQ-Z-0001 THROUGH J-JQ-Z-0004 (PC-1 THROUGH PC-4A & 4B).
2. FOR VENDOR WIRING SEE V/P AC52406A-SHEET-14 THRU AC52406A-SHEET-29, AC52406A-SHEET-36, AC52406A-SHEET-37, AND AC52406A-SHEET-39 THRU AC52406A-SHEET-42.
3. SWITCH IS SHOWN IN NORMAL ENERGIZED POSITION(NC).
4. PRIMARY WIRE NUMBERS AT THE PC CABINET FIELD END ARE AS SHOWN IN THE SCHEMATIC/LOOP DIAGRAM. THESE FIELD LABELS ARE TYPICALLY FOUND INSIDE THE PC CABINET RACEWAY.

   SECONDARY LABELS ARE LOCATED ON THE FIELD WIRES AT THE PC CABINETS TERMINATION STRIPS AND ARE LABELED AS THE EPN (EQUIPMENT NUMBER) TAG WITH A SUFFIX OF "-1" OR "-2".

   TYPICAL PC FIELD WIRING LABELS ARE AS FOLLOWS:

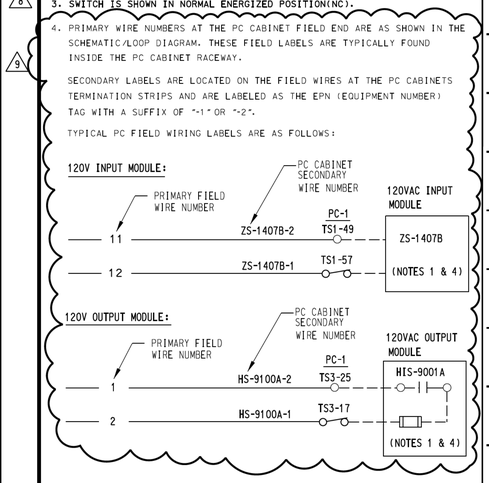

E E4 Z 0001 LATEST REVISION 9

BECHTEL NATIONAL INC.
SAN FRANCISCO

JOB NO. 13239

THIS DOCUMENT CONTAINS INFORMATION RELATING TO ACTIVITIES OF THE U.S. DEPARTMENT OF ENERGY. NOT TO BE REPRODUCED OR RELEASED WITHOUT PRIOR APPROVAL.

M/F	BLDG.	PROJ.	DA	TYPE		LAST REV.
	210Z	S1780	Z205	61	W 774028	9

(U) SAVANNAH RIVER PLANT-200Z AREA
DEFENSE WASTE PROCESSING FACILITY-SALTSTONE

BULK MATERIAL HANDLING
SCHEMATIC DIAGRAM
PREMIX BLENDING & CONVEYING SYSTEM
E & I ELECTRICAL

PROJ.	REV. NO.	DATE	REVISION	PRP'D	LEAD ENG	CHK'D	APRV'D	APRV'D	APRV'D
N/A	9	07/29/11	REVISE AS SHOWN; ADDED PC-2 TERMINAL NUMBERS AND NOTE. (REF. TTR # HLW-SSF-2006-0007).	APPROVALS MAINTAINED IN DCR/CDWS/MICROFILM					
N/A	8	08/16/10	INCORPORATED E-DCF-Z-00262, J-DCF-Z-00284, J-DCF-Z-00303, J-DCF-Z-00412, J-DCF-Z-00419, AND J-DCP-Z-07002 (REF DCN E002).	APPROVALS MAINTAINED IN DCR/CDWS/MICROFILM					
N/A	7	08/03/06	INCORP E-DCF-Z-00136, J-DCF-Z-00189, J-DCP-Z-94002 (REF DCN E-004)	APPROV. SIGNATURES IN AIM					
W899	6	4/30/03	INCORP'D J-DCP-Z-02001	SIGNATURES ON MICROFILM					
S1780	5	7/19/95	INCORP'D J-DCP-Z-94002 (REF DCN E-001)	SIGNATURES ON MICROFILM					

E-E4-Z-0001
E & PD DRAWING NO.

UNITED STATES DEPARTMENT OF ENERGY
SAVANNAH RIVER SITE

PROJ	NO.	REVISION	DFT	ENG	CHK	SPV	PE	DUP	DATE
S1780	1	INITIAL CONSTR. RELEASE (ICR)	ORIGINAL			SIGNED			08MAY86
S1780	2	FINAL CONSTRUCTION RELEASE (FCR)	ORIGINAL			SIGNED			10JUN86
S1780	3	REVISED & REISSUED FOR FCR (FC2)	ORIGINAL			SIGNED			27OCT86
S1780	4	REV.& REISSUED FOR FCR (FC3)	ORIGINAL			SIGNED			26JAN87
S1780	5	ISSUED AS BUILT (IAB)	PAD						

STANDARDS: W770090

REFERENCE DRAWINGS: ELECTRICAL SYMB & LEGEND; EE-22002-25 REF: E-E4Z0 R.A.K.; MCC V/P MH-21142-19 REF: E-E4Z0 R.A.K.; BLEND V/P BPE 218582

THIS DRAWING HAS BEEN FURNISHED BY E.I.DU PONT DE NEMOURS & CO. THE INFORMATION AND KNOW-HOW THEREON MAY NOT BE USED NOR THE DRAWING REPRODUCED WITHOUT THE WRITTEN PERMISSION OF DU PONT. ALL REPRODUCTIONS IN WHOLE OR IN PART, INCLUDING VENDOR'S SHOP DRAWINGS, SHALL BEAR OR REFER TO THIS STAMP.

PROJECT	S1780
SCALE	NONE
DRAWN	RW OTTO
CHECKED	
APPROVED I.C.R.	NOT REQUIRED
APPROVED FINAL	NOT REQUIRED

DATE: 21DEC84

DRC-3
E.I.DU PONT DE NEMOURS & CO., INC.
WILMINGTON, DELAWARE
ENGINEERING DEPARTMENT
W 774028

LAST CADD REV BY: R.A. KING DATE: 07/25/11

Design Change Notice (DCN) Continuation Page

BEFORE

DCP No.	Revision	Document No.	Revision	Page
M-DCP-Z-11003	1	W774028	9	3 of 5
DCN No.	Revision	Project/Task No.		
M-DCP-Z-11003-E-00001	1	N/A		

DG4(111,123SPF1000.DGN;
DG6(111,41W774028.DGN;
AT-10-13 (10/84)

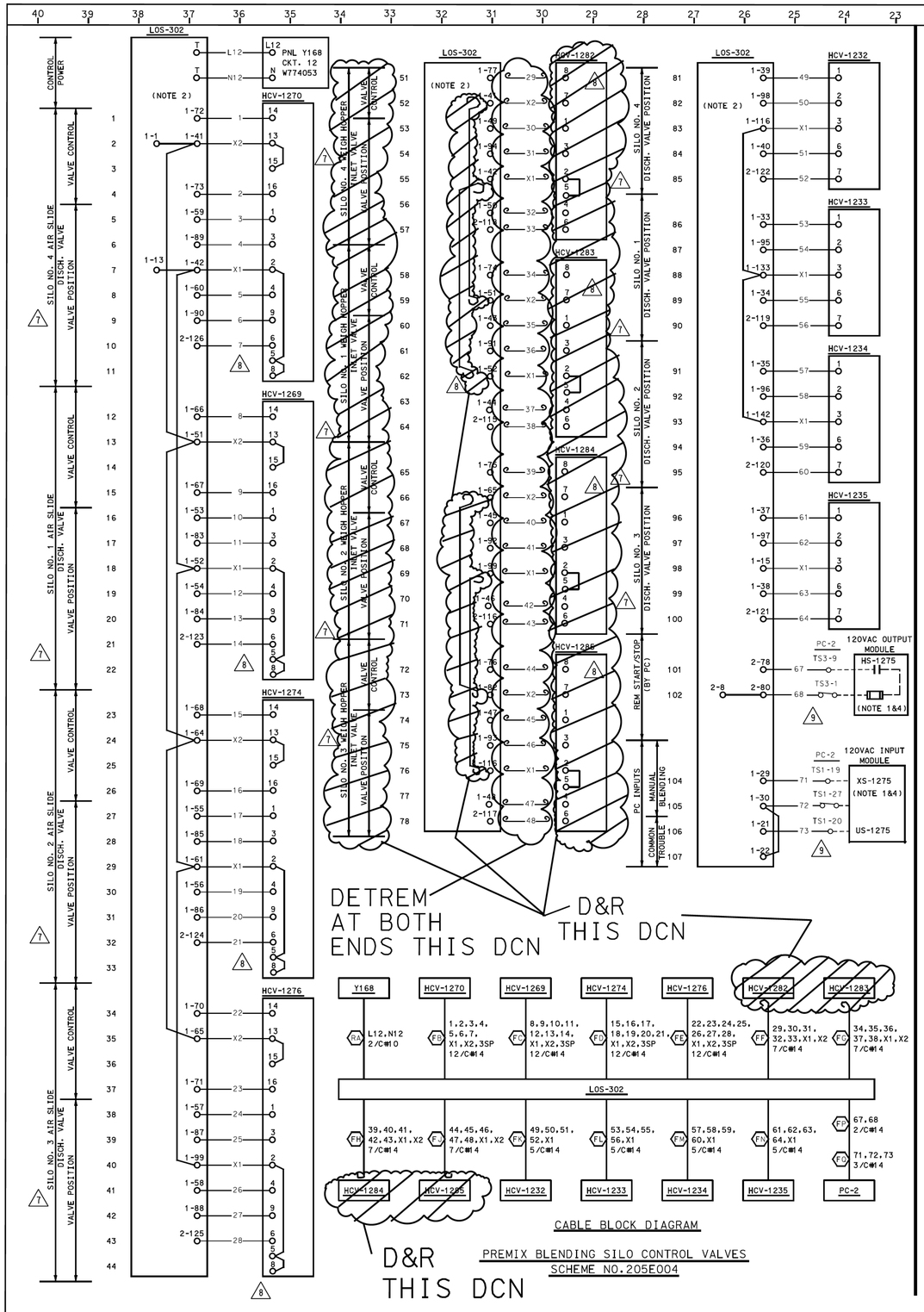

CABLE BLOCK DIAGRAM

PREMIX BLENDING SILO CONTROL VALVES
SCHEME NO.205E004

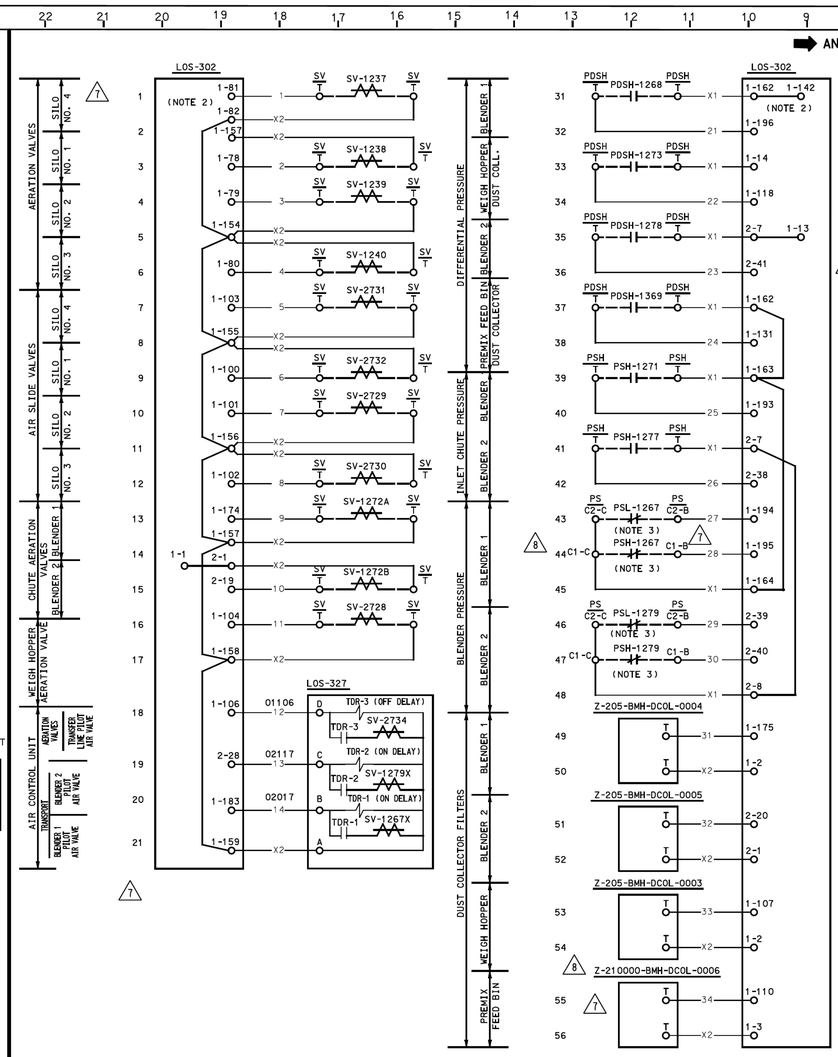

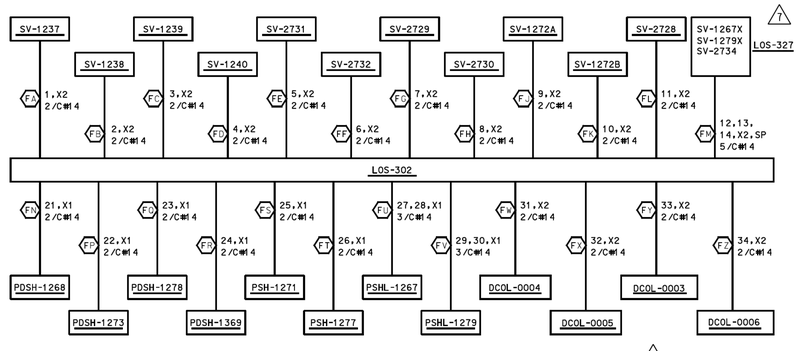

CABLE BLOCK DIAGRAM

PREMIX BLENDING AIR SYSTEM
SCHEME NO.205E005

ANALYZE FOR SAFETY,ECOLOGY,AND MINIMUM ESSENTIAL DESIGN

NOTES

1. FOR DELTA V DCS I/O MODULE IDENTIFICATION AND TERMINAL NUMBERS SEE J-JQ-Z-0001 THROUGH J-JQ-Z-0004 (PC-1 THROUGH PC-4A & 4B).
2. FOR VENDOR WIRING SEE V/P AC52406A-SHEET-14 THRU AC52406A-SHEET-29, AC52406A-SHEET-36, AC52406A-SHEET-37, AND AC52406A-SHEET-39 THRU AC52406A-SHEET-42.
3. **SWITCH IS SHOWN IN NORMAL ENERGIZED POSITION(NC).**
4. PRIMARY WIRE NUMBERS AT THE PC CABINET FIELD END ARE AS SHOWN IN THE SCHEMATIC/LOOP DIAGRAM. THESE FIELD LABELS ARE TYPICALLY FOUND INSIDE THE PC CABINET RACEWAY.

   SECONDARY LABELS ARE LOCATED ON THE FIELD WIRES AT THE PC CABINETS TERMINATION STRIPS AND ARE LABELED AS THE EPN (EQUIPMENT NUMBER) TAG WITH A SUFFIX OF "-1" OR "-2".

   TYPICAL PC FIELD WIRING LABELS ARE AS FOLLOWS:

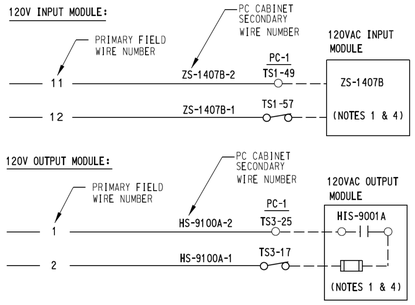

CONSTRUCTION NOTE:
(DON'T INCORPORATE)

CABLES 205E004FF,FG,FH & FJ ARE DE-TERMINATED AT BOTH ENDS AND LABELLED AS "SPARES PER M-DCP-Z-11003-E-00001."

E E4 Z 0001 LATEST REVISION 9

BECHTEL NATIONAL INC.
SAN FRANCISCO
JOB NO. 13239

THIS DOCUMENT CONTAINS INFORMATION RELATING TO ACTIVITIES OF THE U.S. DEPARTMENT OF ENERGY. NOT TO BE REPRODUCED OR RELEASED WITHOUT PRIOR APPROVAL.

M/F	BLDG.	PROJ.	DA	TYPE		LAST 9 REV.
	210Z	S1780	Z205	61	W 774028	

(U) SAVANNAH RIVER PLANT-200Z AREA
DEFENSE WASTE PROCESSING FACILITY-SALTSTONE
BULK MATERIAL HANDLING
SCHEMATIC DIAGRAM
PREMIX BLENDING & CONVEYING SYSTEM
E & I ELECTRICAL

PROJ	NO.	REVISION	DFT	ENG	CHK	SPV	PE	DUP	DATE
S1780	1	INITIAL CONSTR. RELEASE (ICR)	ORIGINAL			SIGNED			08MAY86
S1780	2	FINAL CONSTRUCTION RELEASE (FCR)	ORIGINAL			SIGNED			10JUN86
S1780	3	REVISED & REISSUED FOR FCR (FC2)	ORIGINAL			SIGNED			27OCT86
S1780	4	REV.& REISSUED FOR FCR (FC3)	ORIGINAL			SIGNED			26JAN87
S1780	5	ISSUED AS BUILT (IAB)	PAD						

STANDARDS

REFERENCE DRAWINGS: W770090; ELECTRICAL SYMB & LEGEND; ELE22002-25; MCC-VP; TBPE-218444; MH-211-0419; FLEND V/P; X 53; TBPE 218582

THIS DRAWING HAS BEEN FURNISHED BY E.I.DU PONT DE NEMOURS & CO. THE INFORMATION AND KNOW-HOW THEREON MAY NOT BE USED NOR THE DRAWING REPRODUCED WITHOUT THE WRITTEN PERMISSION OF DU PONT. ALL REPRODUCTIONS IN WHOLE OR IN PART, INCLUDING VENDOR'S SHOP DRAWINGS, SHALL BEAR OR REFER TO THIS STAMP.

PROJECT	S1780
SCALE	NONE
DRAWN	RW OTTO
DATE	21DEC84
CHECKED	
APPROVED I.C.R.	NOT REQUIRED
APPROVED FINAL	NOT REQUIRED

DRC-3 IAB
E.I.DU PONT DE NEMOURS & CO., INC.
WILMINGTON, DELAWARE
ENGINEERING DEPARTMENT
W 774028

PROJ.	REV. NO.	DATE	REVISION	PRP'D	LEAD ENG	CHK'D	APRV'D	APRV'D	APRV'D
N/A	9	07/29/11	REVISE AS SHOWN; ADDED PC-2 TERMINAL NUMBERS AND NOTE. (REF. TTR # HLW-SSF-2006-00007).	APPROVALS MAINTAINED IN DCR/DWS/MICROFILM					
N/A	8	08/16/10	INCORPORATED E-DCF-Z-00262, J-DCF-Z-00284, J-DCF-Z-00303, J-DCF-Z-00412, J-DCF-Z-00419, AND J-DCP-Z-07002 (REF DCN E002).	APPROVALS MAINTAINED IN DCR/DWS/MICROFILM					
N/A	7	08/03/06	INCORP E-DCF-Z-00136, J-DCF-Z-00189, J-DCP-Z-94002 (REF DCN E-004)	APPROV. SIGNATURES IN AIM					
W899	6	4/30/03	INCORP'D J-DCP-Z-02001	SIGNATURES ON MICROFILM					
S1780	5	1/19/95	INCORP'D J-DCP-Z-94002 (REF DCN E-001)	SIGNATURES ON MICROFILM					

E-E4-Z-0001
E & PD DRAWING NO.

UNITED STATES DEPARTMENT OF ENERGY
SAVANNAH RIVER SITE

LAST CADD REV BY: R.A. KING DATE: 07/25/11

D & R
Design Change Notice (DCN) Continuation Page
DCP No. M-DCP-Z-11003 Revision 1
DCN No. M-DCP-Z-11003-E-00001 Revision 1
Document No. W774028 Revision 9
Project/Task No. N/A Page 4 of 5

QS4:(111.12)SPF1000.DGN;
QS6:(111.41)W774028.DGN;
AT-10-13 (10/84)

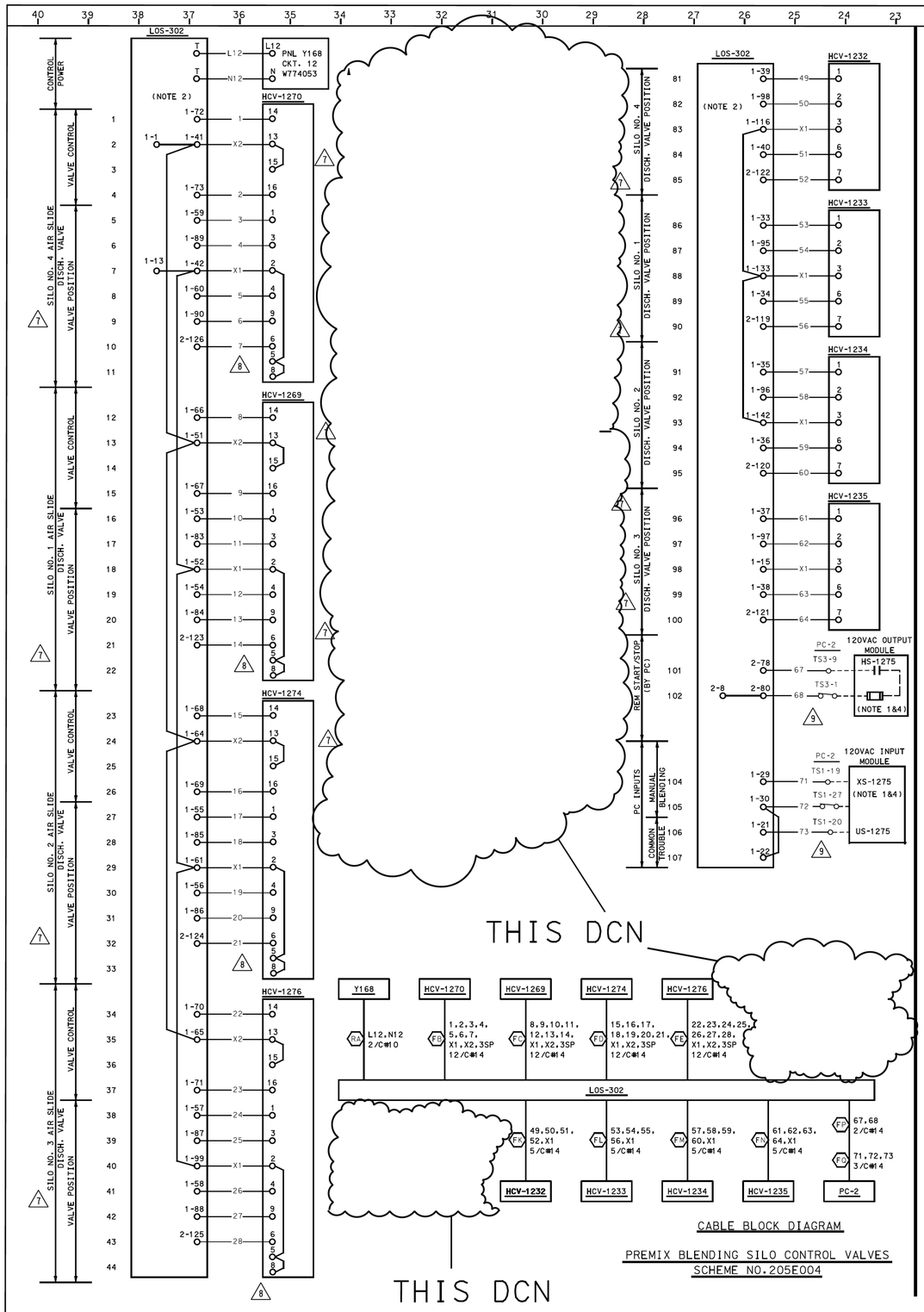

CABLE BLOCK DIAGRAM

PREMIX BLENDING SILO CONTROL VALVES
SCHEME NO.205E004

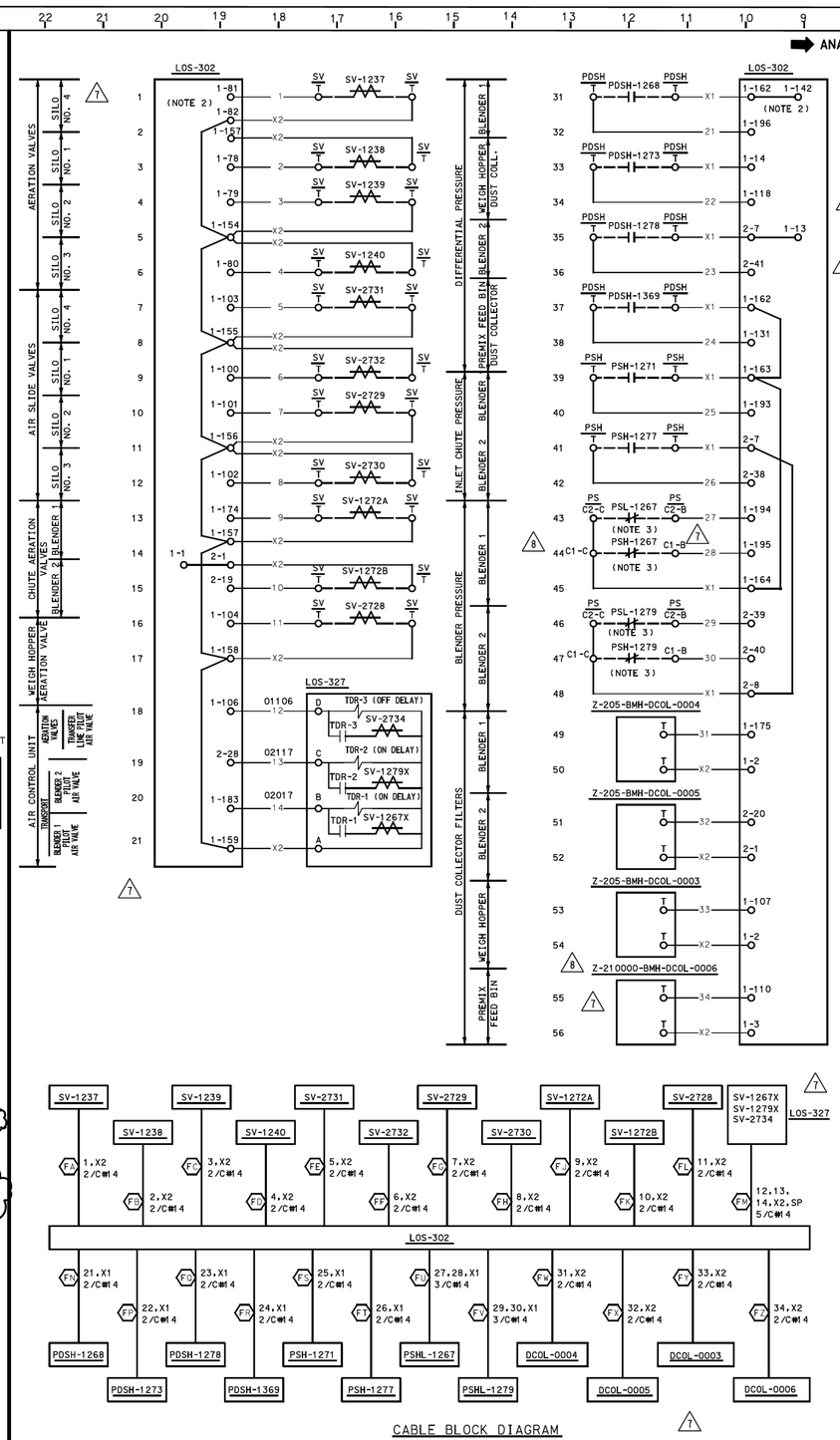

CABLE BLOCK DIAGRAM

PREMIX BLENDING AIR SYSTEM
SCHEME NO.205E005

ANALYZE FOR SAFETY, ECOLOGY, AND MINIMUM ESSENTIAL DESIGN

NOTES

1. FOR DELTA V DCS I/O MODULE IDENTIFICATION AND TERMINAL NUMBERS SEE J-JQ-Z-0001 THROUGH J-JQ-Z-0004 (PC-1 THROUGH PC-4A & 4B).
2. FOR VENDOR WIRING SEE V/P AC52406A-SHEET-14 THRU AC52406A-SHEET-29, AC52406A-SHEET-36, AC52406A-SHEET-37, AND AC52406A-SHEET-39 THRU AC52406A-SHEET-42.
3. **SWITCH IS SHOWN IN NORMAL ENERGIZED POSITION(NC).**
4. PRIMARY WIRE NUMBERS AT THE PC CABINET FIELD END ARE AS SHOWN IN THE SCHEMATIC/LOOP DIAGRAM. THESE FIELD LABELS ARE TYPICALLY FOUND INSIDE THE PC CABINET RACEWAY.

   SECONDARY LABELS ARE LOCATED ON THE FIELD WIRES AT THE PC CABINETS TERMINATION STRIPS AND ARE LABELED AS THE EPN (EQUIPMENT NUMBER) TAG WITH A SUFFIX OF "-1" OR "-2".

   TYPICAL PC FIELD WIRING LABELS ARE AS FOLLOWS:

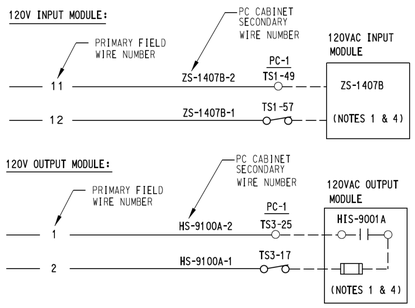

E E4 Z 0001 LATEST REVISION 9

BECHTEL NATIONAL INC.
SAN FRANCISCO

JOB NO. 13239

THIS DOCUMENT CONTAINS INFORMATION RELATING TO ACTIVITIES OF THE U.S. DEPARTMENT OF ENERGY. NOT TO BE REPRODUCED OR RELEASED WITHOUT PRIOR APPROVAL.

M/F	BLDG.	PROJ.	DA	TYPE		LAST REV.
	210Z	S1780	Z205	61	W 774028	9

(U) SAVANNAH RIVER PLANT-200Z AREA
DEFENSE WASTE PROCESSING FACILITY-SALTSTONE

BULK MATERIAL HANDLING
SCHEMATIC DIAGRAM
PREMIX BLENDING & CONVEYING SYSTEM
E & I ELECTRICAL

PROJ	NO.	REVISION	DFT	ENG	CHK	SPV	PE	DLP	DATE
S1780	0	INITIAL CONSTR. RELEASE (ICR)	ORIGINAL			SIGNED			08MAY86
S1780	1	FINAL CONSTRUCTION RELEASE (FCR)	ORIGINAL			SIGNED			10JUN86
S1780	2	REVISED & REISSUED FOR FCR (FC2)	ORIGINAL			SIGNED			27OCT86
S1780	3	REV.& REISSUED FOR FCR (FC3)	ORIGINAL			SIGNED			26JAN87
S1780	4	ISSUED AS BUILT (IAB)	PAD						

STANDARDS: 7

REFERENCE DRAWINGS: W770090; ELECTRICAL SYMB & LEGEND; E-E22002-25 BPF 218414 MCC V/P; M-21-MCC19 & 53 BLEND V/P BPF 218582

THIS DRAWING HAS BEEN FURNISHED BY E.I.DU PONT DE NEMOURS & CO. THE INFORMATION AND KNOW-HOW THEREON MAY NOT BE USED NOR THE DRAWING REPRODUCED WITHOUT THE WRITTEN PERMISSION OF DU PONT. ALL REPRODUCTIONS IN WHOLE OR IN PART, INCLUDING VENDOR'S SHOP DRAWINGS, SHALL BEAR OR REFER TO THIS STAMP.

PROJECT	S1780
SCALE	NONE
DRAWN	RW OTTO
CHECKED	
APPROVED - I.C.R.	NOT REQUIRED
APPROVED FINAL	NOT REQUIRED

DATE 21DEC84

DRC-3 DUPONT
E.I.DU PONT DE NEMOURS & CO., INC.
WILMINGTON, DELAWARE
ENGINEERING DEPARTMENT
W 774028

PROJ.	REV. NO.	DATE	REVISION	PRP'D	LEAD ENG	CHK'D	APRV'D	APRV'D	APRV'D
N/A	9	07/29/11	REVISE AS SHOWN. ADDED PC-2 TERMINAL NUMBERS AND NOTE. (REF. TTR # HLW-SSF-2006-0007).						
N/A	8	08/16/10	INCORPORATED E-DCF-Z-00262, J-DCF-Z-00284, J-DCF-Z-00303, J-DCF-Z-00412, J-DCF-Z-00419, AND J-DCP-Z-07002 (REF DCN E002).						
N/A	7	08/03/06	INCORP E-DCF-Z-00136, J-DCF-Z-00189, J-DCP-Z-94002 (REF DCN E-004)						
W899	6	4/30/03	INCORP'D J-DCP-Z-02001						
S1780	5	1/19/95	INCORP'D J-DCP-Z-94002 (REF DCN E-001)						

APPROVALS MAINTAINED ON DCR/DWS/MICROFILM
APPROVAL SIGNATURES IN AIM
SIGNATURES ON MICROFILM
SIGNATURES ON MICROFILM

E-E4-Z-0001
E & PD DRAWING NO.

UNITED STATES DEPARTMENT OF ENERGY
SAVANNAH RIVER SITE

LAST CADD REV BY: R.A. KING DATE: 07/25/11

AFTER

Design Change Notice (DCN) Continuation Page

DCP No.	Revision	Document No.	Revision	Project/Task No.	Revision	Page
M-00P-Z-11003	1	W774028	1	N/A	9	5 of 5
DCN No. M-00P-Z-11003-E-00001						

DGS-E(111,1215)FT1000.DGN;
DGS-E(111,41)W774028.DGN;
AT-10-13 (10/84)

Design Change Notice (DCN)

DCP No.		Revision	
M-DCP-Z-11003		0	
DCN No.	**Revision**	**Project/Task No**	**Document No. (Doc Rev)**
M-DCP-Z-11003-E-00002	0	N/A	W774053;14

Reason for Change (Be specific)

Provide Upgrade information for Weigh Hopper

Description of Change

PROVIDE 120VAC POWER TO LOS-302.

Engineering Approvals

Originator		Checker/Verifier	Date	Responsible Engineering Manager	Date
MADKAN, RANBIR K	8/27/2012	HYMEL, LOUIS JAMES	8/27/2012	CAUGHMAN, CRAIG ANSEL	8/27/2012

ANALYZE FOR SAFETY,ECOLOGY,AND MINIMUM ESSENTIAL DESIGN

CKT. NO.	FUSE RATING	FROM	TO	SCHEME CABLE NO.	WIRE NO.	CABLE SIZE	REMARKS
1							SPARE
2							SPARE
3	3A	TBC1004	LOS-102	210E048RC	L3,N3	2/C#14	SCHEME DWG. W774037
4	3A	TBC1004	LOS-106	210E048RD	L4,N4	2/C#14	SCHEME DWG. W774040
5	3A	TBC1004	LOS-200	210E048RE	L5,N5	2/C#14	SCHEME DWG. W774040
6	3A	TBC1004	LOS-107	210E048RF	L6,N6	2/C#14	SCHEME DWG. W774061
7	3A	TBC1004	LOS-201	210E048RG	L7,N7	2/C#14	SCHEME DWG. W774061
8	3A	TBC1004	LOS-111	210E048RH	L8,N8	2/C#14	SCHEME DWG. W774062
9	3A	TBC1004	LOS-202	210E048RJ	L9,N9	2/C#14	SCHEME DWG. W774062
10	3A	TBC1004	LI-1368	205E1368RA	L10,N10	2/C#14	LOOP DIAG. D193701
11	3A	TCB1004	LSH-1381 (TBBR002)	205E007RA	L11,N11	2/C#14	SCHEME DWG. W774032 14
12	3A			14	L11,N11		SPARE
13							SPARE
14							SPARE
15							SPARE
16							SPARE
17							SPARE
18							SPARE

MAIN FEEDER 2/C#12 FROM PNL Y168 CKT #11 (THIS DWG)

120VAC FUSE BOX TBC1004 CABLE SCHEDULE
ROOF INSTRUMENTATION - 210Z
Z-210-EEP-PNL-TBC1004

SEE NOTE 3

VOLTS 120/208V — DIST. PWR. PNL. Y168 — FEEDER 4-1/C#2 — [X] MAIN BREAKER
PHASE 3φ — LOCATION BLDG 210Z-ECR — ENTRY TOP — [ ] MAIN LUGS ONLY
WIRE 4W [X] S/N — CIRCUIT BREAKER TYPE B.O. — MTG. SURFACE — AMP 100

CKT. NO.	BKR RATING	FROM	TO	SCHEME CABLE NO.	WIRE NO.	CABLE SIZE	REMARKS
1	15A	Y168				3/C#12	SPARE 10
3	20A	Y168				2/C#10	SPARE 14
5	15A	Y168	TBC1001	210E029RA	L5,N5	2/C#12	DEDICATED INSTRUMENTATION FUSE BOX SCHEDULE W774051
7		Y168	TBC1002	210E029RB	L7,N7	2/C#12	
9		Y168	TBC1003	210E029RC	L9,N9	2/C#12	
11		Y168	TBC1004	210E029RD	L11,N11	2/C#12	DEDICATED INSTRUMENTATION FUSE BOX SCHEDULE THIS DWG
13		Y168				2/C#12	SPARE 14
15		Y168					SPARE
17		Y168	TBA1001	210E029RG	L17,N17	2/C#12	DEDICATED INSTRUMENTATION FUSE BOX SCHEDULE W774055
19		Y168	PC-1	210E029RH	L19,N19	2/C#12	UTILITY PWR FOR PC-1, PC-2
21		Y168	PC-4A	210E029RJ	L21,N21	2/C#12	UTILITY PWR FOR PC-4A,PC-4B
23		Y168	PC-3	210E029RK	L23,N23	2/C#12	UTILITY PWR FOR PC-3
25		Y168					SPARE
27		Y168					SPARE 14
29		Y168					SPARE
31	40A	Y168					
33		Y168					SPARE
35		Y168					
37							SPACE
39							SPACE
41							SPACE
2	15A	Y168	LOS-123	SEE REMARKS	L2,N2	2/C#12	SCH NO 201E008 DWG NO W774022
4	15A	Y168	TVC-8002A,B	210J8001RG	L4,N4,G4	3/C#12	POWER FOR TWO EA.,PROCESS ROOM CCTV CAMERAS (JJ4Z00040) 14
6	20A	Y168				2/C#12	SPARE 11
8	15A	Y168	FZ-1387	205E1387RA	L8,N8	2/C#12	LOOP DIAG D193703
10	15A	Y168					SPARE
12	20A	Y168	LOS-302	SEE REMARKS	L12,N12	2/C#10	SCH NO 205E004 DWG NO W774028
14	20A	Y168	LOS-303	SEE REMARKS	L14,N14	2/C#10	SCH NO 205E007 DWG NO W774032
16	15A	Y168	LOS-101	SEE REMARKS	L16,N16	2/C#12	SCH NO 210E049 DWG NO W774037
18		Y168	LOS-103	SEE REMARKS	L18,N18	2/C#12	SCH NO 210E050 DWG NO W774039
20		Y168	LOS-109	SEE REMARKS	L20,N20	2/C#12	SCH NO 210E007 DWG NO W774062
22		Y168					SPARE 12
24		Y168					SPARE
26		Y168					SPARE
28		Y168	LOS-312	SEE REMARKS	L28,N28	2/C#12	SCH NO 201E039 DWG NO W774088
30		Y168					SPARE
32		Y168					SPARE
34		Y168					SPARE
36		Y168					SPARE
38							SPACE
40							SPACE
42							SPACE

MAIN FEEDER 4-1/C#2 FROM B123-8E (W774005)

120/208VAC DEDICATED POWER PANEL Y168 (Z-210-EEP-PNL-0168)
CABLE SCHEDULE (SEE NOTE 2)
SCHEME NO 210E029 & 210E030

NOTE:

1. FOR FUSE BOX DATA SHEET SEE DS-E-221.
2. CABLE BLOCK DIAGRAM FOR Y168 POWER SOURCE IS SHOWN ON DWG. W774052.
3. BREAKER CLI NUMBERS ARE CONSTRUCTED AS FOLLOWS:
   Z-210-EEP-BKR-Y168-(CIRCUIT #)
   EXAMPLE: Z-210-EEP-BKR-Y168-3

	NUMBERS ALLOTTED	LAST NUMBER USED	NUMBERS CANCELLED
INSTRUMENT LOOP NUMBERS			

BECHTEL NATIONAL INC.
SAN FRANCISCO
JOB NO. 13239

THIS DOCUMENT CONTAINS INFORMATION RELATING TO ACTIVITIES OF THE U.S. DEPARTMENT OF ENERGY. NOT TO BE REPRODUCED OR RELEASED WITHOUT PRIOR APPROVAL.

M/F	BLDG.	PROJ.	DA	TYPE		LAST REV.
	210Z	S1780	Z201 Z205 Z210	61	W 774053	14

10 C B U - WASTE SOLIDIFICATION PROJECTS
SALTSTONE FACILITY

SALTSTONE PROCESS BUILDING
120VAC PANEL & FUSE BOX SCHEDULES
PNL Y168 AND FUSE BOX TBC1004

Bechtel is responsible for the original design contained on this drawing, however, changes incorporated on this drawing to reflect As-built conditions have not been verified by Bechtel National, Inc.

* MT-WD-2005-00002

PROJ.	REV. NO.	DATE	REVISION	PRP'D	LEAD ENG	CHK'D	APRV'D	APRV'D	APRV'D
SSMT*	14		INCORP:M-DCP-Z-03006 (REF DCN E009); M-DCP-Z-05001 (REF DCN E005); J-DCP-Z-05002 (REF DCN E008); E-DCP-Z-05002 (REF DCN E001); AND E-DCF-Z-00150						

E-ES-Z-0003 — DRAWING NO.
UNITED STATES DEPARTMENT OF ENERGY
SAVANNAH RIVER SITE

PROJ.	REV. NO.	DATE	REVISION	PRP'D	LEAD ENG	CHK'D	APRV'D	APRV'D	APRV'D
	13	01MAR04	INCORPORATED C-DCP-Z-03005 (REF. DCN E-010. NO CHANGES MADE)	SIGNATURES ON MICROFILM					
S1780	12	14JAN04	INCORP'D E-DCF-Z-00134	SIGNATURES ON MICROFILM					
S1780	11	12/1/03	INCORP'D J-DCP-Z-03002 (E004)	SIGNATURES ON MICROFILM					
S1780	10	9/17/03	AS BUILT (D-PNT-Z-00220, -00222, -00226)	SIGNATURES ON MICROFILM					
N/A	9	11/05/02	INCORPORATED E-DCF-Z-00127 (PE&CD/CM)	BCW	N/A	KEH	JAW	N/A	N/A
N/A	8	08/02/01	INC. E-DCF-Z-00058, E-DCF-Z-00093, E-DCF-Z-00094 AND J-DCP-Z-94002-E002 (PE&CD/CM)	BCW	N/A	PCM	TDL	N/A	N/A

E-ES-Z-0003 — E & PD DRAWING NO.
UNITED STATES DEPARTMENT OF ENERGY
SAVANNAH RIVER SITE

PROJ	NO.	REVISION	DFT	ENG	CHK	SPV	PE	DUP	DATE
S1780	0	ISSUE FOR INIT CONST REL (ICR)	ORIGINAL				SIGNED		09JAN85
S1780	1	REISSUE FOR ICR(FOR PROCUREMENT)	ORIGINAL				SIGNED		24JAN86
S1780	2	REISSUE FOR ICR	ORIGINAL				SIGNED		30JAN86
S1780	3	ISSUE FOR FINAL CONST REL (FCR)	ORIGINAL				SIGNED		19MAY86
S1780	4	ISSUE FOR FINAL CONST REL (FC2)	ORIGINAL				SIGNED		27OCT86
S1780	5	ISSUE FOR FINAL CONST REL (FC3)	ORIGINAL				SIGNED		06MAR87
S1780	6	ISSUED FOR AS-BUILT (IAB)	ORIGINAL				SIGNED		03OCT88
S1780	7	ISSUED FOR POST AS-BUILT (PAB)	ORIGINAL				SIGNED		03OCT88
		WAP D5-806 (DCF 5854)							

TA

STANDARDS

REFERENCE DRAWINGS

W774006	MCC B123 S/L DIAG.		
W774052	CABLE BLOCK DIAGRAM		

THIS DRAWING HAS BEEN FURNISHED BY E.I.DU PONT DE NEMOURS & CO. THE INFORMATION AND KNOW-HOW THEREON MAY NOT BE USED NOR THE DRAWING REPRODUCED WITHOUT THE WRITTEN PERMISSION OF DU PONT. ALL REPRODUCTIONS IN WHOLE OR IN PART, INCLUDING VENDOR'S SHOP DRAWINGS, SHALL BEAR OR REFER TO THIS STAMP.

PROJECT S1780
SCALE NONE — DATE 21OCT85
DRAWN KM HEDLUND
CHECKED
APPROVED NOT REQUIRED
I.C.R.
APPROVED NOT REQUIRED
FINAL
DRC-3 — WORKING
E.I.DU PONT DE NEMOURS & CO., INC.
WILMINGTON, DELAWARE
ENGINEERING DEPARTMENT
W 774053

PLOT DATE: 02/27/04

BEFORE: Design Change Notice (DCN) Continuation Page

DCP No. M-DCP-Z-11003	Revision 0	Document No. W774053	Revision 14
DCN No. E-00002	Revision 0	Project/Task No. N/A	Page 2 of 3

ANALYZE FOR SAFETY, ECOLOGY, AND MINIMUM ESSENTIAL DESIGN

CKT. NO.	FUSE RATING	FROM	TO	SCHEME CABLE NO.	WIRE NO.	CABLE SIZE	REMARKS
1							SPARE
2							SPARE
3	3A	TBC1004	LOS-102	210E048RC	L3.N3	2/C#14	SCHEME DWG. W774037
4	3A	TBC1004	LOS-106	210E048RD	L4.N4	2/C#14	SCHEME DWG. W774040
5	3A	TBC1004	LOS-200	210E048RE	L5.N5	2/C#14	SCHEME DWG. W774040
6	3A	TBC1004	LOS-107	210E048RF	L6.N6	2/C#14	SCHEME DWG. W774061
7	3A	TBC1004	LOS-201	210E048RG	L7.N7	2/C#14	SCHEME DWG. W774061
8	3A	TBC1004	LOS-111	210E048RH	L8.N8	2/C#14	SCHEME DWG. W774062
9	3A	TBC1004	LOS-202	210E048RJ	L9.N9	2/C#14	SCHEME DWG. W774062
10	3A	TBC1004	LI-1368	205E1368RA	L10.N10	2/C#14	LOOP DIAG. D193701
11	3A	TCB1004	LSH-1381 (TBBR002)	205E007RA	L11.N11	2/C#14	SCHEME DWG. W774032 14
12	3A			14	L11.N11		SPARE
13							SPARE
14							SPARE
15							SPARE
16							SPARE
17							SPARE
18							SPARE

MAIN FEEDER 2/C#12 FROM PNL Y168 CKT #11 (THIS DWG)

120VAC FUSE BOX TBC1004 CABLE SCHEDULE
ROOF INSTRUMENTATION - 210Z
Z-210-EEP-PNL-TBC1004

ADD PER THIS DCN

SEE NOTE 3

VOLTS 120/208V
PHASE 3Ø
WIRE 4W [X] S/N
DIST. PWR. PNL. Y168
LOCATION BLDG 210Z-ECR
CIRCUIT BREAKER TYPE B-O
FEEDER 4-1/C#2
ENTRY TOP
MTG. SURFACE
[X] MAIN BREAKER
[ ] MAIN LUGS ONLY
AMP 100

CKT. NO.	BKR RATING	FROM	TO	SCHEME CABLE NO.	WIRE NO.	CABLE SIZE	REMARKS
1	15A	Y168				3/C#12	SPARE 10A
3	20A	Y168				2/C#10	SPARE 14
5	15A	Y168	TBC1001	210E029RA	L5.N5	2/C#12	DEDICATED INSTRUMENTATION FUSE BOX SCHEDULE W774051
7		Y168	TBC1002	210E029RB	L7.N7	2/C#12	
9		Y168	TBC1003	210E029RC	L9.N9	2/C#12	
11		Y168	TBC1004	210E029RD	L11.N11	2/C#12	DEDICATED INSTRUMENTATION FUSE BOX SCHEDULE THIS DWG
13		Y168				2/C#12	SPARE 14
15		Y168					SPARE
17		Y168	TBA1001	210E029RG	L17.N17	2/C#12	DEDICATED INSTRUMENTATION FUSE BOX SCHEDULE W774055
19		Y168	PC-1	210E029RH	L19.N19	2/C#12	UTILITY PWR FOR PC-1, PC-2
21		Y168	PC-4A	210E029RJ	L21.N21	2/C#12	UTILITY PWR FOR PC-4A.PC-4B
23		Y168	PC-3	210E029RK	L23.N23	2/C#12	UTILITY PWR FOR PC-3
25		Y168					SPARE
27		Y168					SPARE 14
29		Y168					SPARE
31	40A	Y168					
33		Y168					SPARE
35		Y168					
37							SPACE
39							SPACE
41							SPACE
2	15A	Y168	LOS-123	SEE REMARKS	L2.N2	2/C#12	SCH NO 201E008 DWG NO W774022
4	15A	Y168	TVC-8002A.B	210J8001RG	L4.N4.G4	3/C#12	POWER FOR TWO EA..PROCESS ROOM CCTV CAMERAS (JJ4Z00040) 14
6	20A	Y168				2/C#12	SPARE 11
8	15A	Y168	FZ-1387	205E1387RA	L8.N8	2/C#12	LOOP DIAG D193703
10	15A	Y168	LOS-302	210E029RH	L10.N10.G10	3/C#12	J-J8-Z-00032
12	20A	Y168	LOS-302	SEE REMARKS	L12.N12	2/C#10	SCH NO 205E004 DWG NO W774028
14	20A	Y168	LOS-303	SEE REMARKS	L14.N14	2/C#10	SCH NO 205E007 DWG NO W774032
16	15A	Y168	LOS-101	SEE REMARKS	L16.N16	2/C#12	SCH NO 210E049 DWG NO W774037
18		Y168	LOS-103	SEE REMARKS	L18.N18	2/C#12	SCH NO 210E050 DWG NO W774039
20		Y168	LOS-109	SEE REMARKS	L20.N20	2/C#12	SCH NO 210E007 DWG NO W774062
22		Y168					SPARE 12
24		Y168					SPARE
26		Y168					SPARE
28		Y168	LOS-312	SEE REMARKS	L28.N28	2/C#12	SCH NO 201E039 DWG NO W774088
30		Y168					SPARE
32		Y168					SPARE
34		Y168					SPARE
36		Y168					SPARE
38							SPACE
40							SPACE
42							SPACE

MAIN FEEDER 4-1/C#2 FROM B123-8E (W774005)

120/208VAC DEDICATED POWER PANEL Y168 (Z-210-EEP-PNL-0168)
CABLE SCHEDULE (SEE NOTE 2)
SCHEME NO 210E029 & 210E030

NOTE:

1. FOR FUSE BOX DATA SHEET SEE DS-E-221.
2. CABLE BLOCK DIAGRAM FOR Y168 POWER SOURCE IS SHOWN ON DWG. W774052.
3. BREAKER CLI NUMBERS ARE CONSTRUCTED AS FOLLOWS:
   Z-210-EEP-BKR-Y168-(CIRCUIT #)
   EXAMPLE: Z-210-EEP-BKR-Y168-3

	NUMBERS ALLOTTED	LAST NUMBER USED	NUMBERS CANCELLED
INSTRUMENT LOOP NUMBERS			

BECHTEL NATIONAL INC.
SAN FRANCISCO
JOB NO. 13239

THIS DOCUMENT CONTAINS INFORMATION RELATING TO ACTIVITIES OF THE U.S. DEPARTMENT OF ENERGY. NOT TO BE REPRODUCED OR RELEASED WITHOUT PRIOR APPROVAL.

M/F	BLDG.	PROJ.	DA	TYPE		LAST
	210Z	S1780	Z201 Z205 Z210	61	W 774053	14 REV.

10 C B U - WASTE SOLIDIFICATION PROJECTS
SALTSTONE FACILITY

SALTSTONE PROCESS BUILDING
120VAC PANEL & FUSE BOX SCHEDULES
PNL Y168 AND FUSE BOX TBC1004

Bechtel is responsible for the original design contained on this drawing, however, changes incorporated on this drawing to reflect As-built conditions have not been verified by Bechtel National, Inc.

* MT-WD-2005-00002

PROJ.	REV. NO.	DATE	REVISION	PRP'D	LEAD ENG	CHK'D	APRV'D	APRV'D	APRV'D
SSMT*	14		INCORP:M-DCP-Z-05006 (REF DCN E009); M-DCP-Z-05001 (REF DCN E005); J-DCP-Z-05002 (REF DCN E008); E-DCP-Z-05002 (REF DCN E001); AND E-DCF-Z-00150						

E-ES-Z-0003
DRAWING NO.
UNITED STATES DEPARTMENT OF ENERGY
SAVANNAH RIVER SITE

PROJ.	REV. NO.	DATE	REVISION	PRP'D	LEAD ENG	CHK'D	APRV'D	APRV'D	APRV'D
	13	01MAR04	INCORPORATED C-DCP-Z-03005 (REF. DCN E-010. NO CHANGES MADE)	SIGNATURES ON MICROFILM					
S1780	12	14JAN04	INCORP'D E-DCF-Z-00134	SIGNATURES ON MICROFILM					
S1780	11	12/1/03	INCORP'D J-DCP-Z-03002 (E004)	SIGNATURES ON MICROFILM					
S1780	10	9/17/03	AS BUILT (D-FMT-Z-00220, -00222, -00226)	SIGNATURES ON MICROFILM					
N/A	9	11/05/02	INCORPORATED E-DCF-Z-00127 (PEBCD/CM)	BCW	N/A	KEH	JAW	N/A	N/A
N/A	8	08/02/01	INC. E-DCF-Z-00058, E-DCF-Z-00093, E-DCF-Z-00094 AND J-DCP-Z-94001-E002 (PEBCD/CM)	BCW	N/A	PCM	TDL	N/A	N/A

E-ES-Z-0003
E & PD DRAWING NO.
UNITED STATES DEPARTMENT OF ENERGY
SAVANNAH RIVER SITE

PROJ	NO.	REVISION	DFT	ENG	CHK	SPV	PE	DUP	DATE
S1780	0	ISSUE FOR INIT CONST REL (ICR)	ORIGINAL			SIGNED			09JAN85
S1780	1	REISSUE FOR ICR(FOR PROCUREMENT)	ORIGINAL			SIGNED			24JAN86
S1780	2	REISSUE FOR ICR	ORIGINAL			SIGNED			30JAN86
S1780	3	ISSUE FOR FINAL CONST REL (FCR)	ORIGINAL			SIGNED			19MAY86
S1780	4	ISSUE FOR FINAL CONST REL (FC2)	ORIGINAL			SIGNED			27OCT86
S1780	5	ISSUE FOR FINAL CONST REL (FC3)	ORIGINAL			SIGNED			06MAR87
S1780	6	ISSUED FOR AS-BUILT (IAB)	ORIGINAL			SIGNED			03OCT88
S1780	7	ISSUED FOR POST AS-BUILT (PAB)	ORIGINAL			SIGNED			03OCT88
		WAP DE-B06 (DCF 5854)							

STANDARDS

REFERENCE DRAWINGS		
W774006	MCC B123 S/L DIAG.	
W774052	CABLE BLOCK DIAGRAM	

THIS DRAWING HAS BEEN FURNISHED BY E.I.DU PONT DE NEMOURS & CO. THE INFORMATION AND KNOW-HOW THEREON MAY NOT BE USED NOR THE DRAWING REPRODUCED WITHOUT THE WRITTEN PERMISSION OF DU PONT. ALL REPRODUCTIONS IN WHOLE OR IN PART, INCLUDING VENDOR'S SHOP DRAWINGS, SHALL BEAR OR REFER TO THIS STAMP.

PROJECT S1780
SCALE NONE DATE
DRAWN KM HEDLUND 21OCT85
CHECKED
APPROVED NOT REQUIRED
I.C.R.
APPROVED NOT REQUIRED
FINAL
DRC-3
E.I.DU PONT DE NEMOURS & CO., INC.
WILMINGTON, DELAWARE
ENGINEERING DEPARTMENT
W 774053

7A

PLOT DATE: 02/27/04

AFTER:

Design Change Notice (DCN)
Continuation Page

DCP No. M-DCP-Z-11003	Revision 0	Document No. W774053	Revision 14
DCN No. E-00002	Revision 0	Project/Task No. N/A	Page 3 of 3

Design Change Notice (DCN)

DCP Number	Revision	
M-DCP-Z-11003	1	
DCN No.	**Revision**	**Project/Task No**
M-DCP-Z-11003-E-00003	1	N/A

Design Change Notice (DCN)

Classification Reviewer: N/A

Date: 05/22/2019

Design Change Notice (DCN)

DCP Number	Revision	
M-DCP-Z-11003	1	
DCN No.	**Revision**	**Project/Task No**
M-DCP-Z-11003-E-00003	1	N/A

Document No. (Doc Rev)
W774283;7

Reason for Change (Be specific)
Wiring for HCV-1282/1283/1284/1285 needs to determinated.

Description of Change
Rework conduit from HCV-1282/1283/1284/1285 to WCV-1282/1283/1284/1285; add BMH-1000 and raceway; and add Air Cannon Solenoids, SV-1009A-D, SV-2009A-D, SV-3009A-D, SV-4009A-D and the associated raceway.

Rev.1: Air Canon solenoids will not be installed and will be replaced with pneumatically operated valves. Raceway associated with solenoids will not be installed and DCN is updated to delete the page associated with solenoid conduits as shown on attached pages.

Engineering Approvals

Originator	Date	Responsible Engineer Manager	Date
MADKAN, RANBIR K.	05/21/2019	CAUGHMAN, CRAIG A.	05/22/2019

Verifier/Checker	Date	Discipline
CHAWLA, SANJAY	05/22/2019	E-ELECTRICAL

Verification Method(s)
Design Check (GS/PS only)

ANALYZE FOR SAFETY, ECOLOGY, AND MINIMUM ESSENTIAL DESIGN

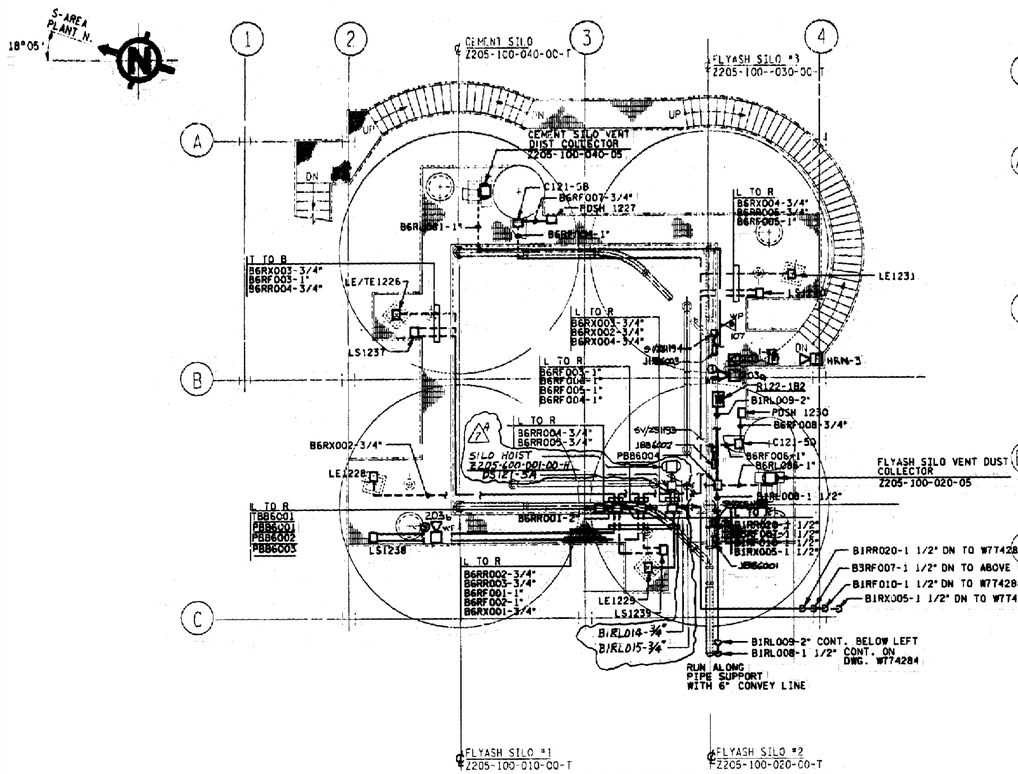

PLAN - ABOVE SILOS

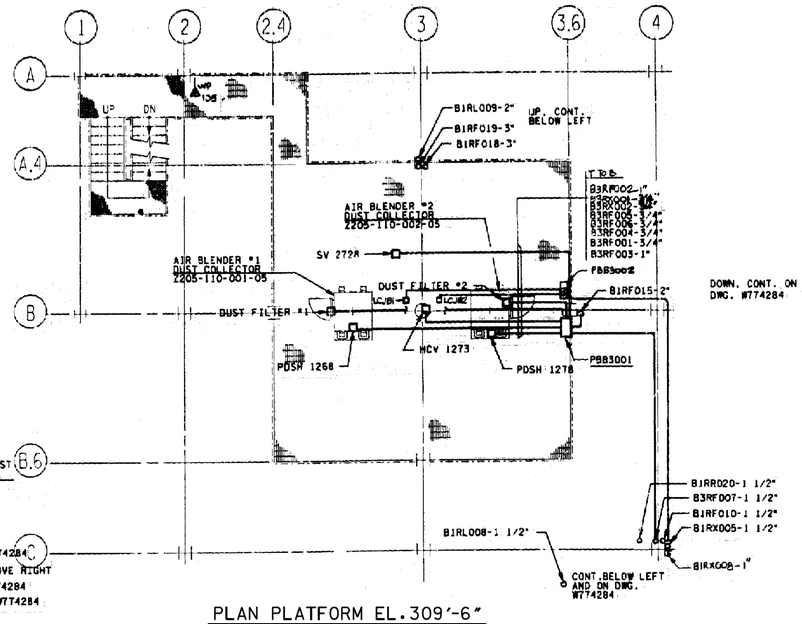

PLAN PLATFORM EL.309'-6"

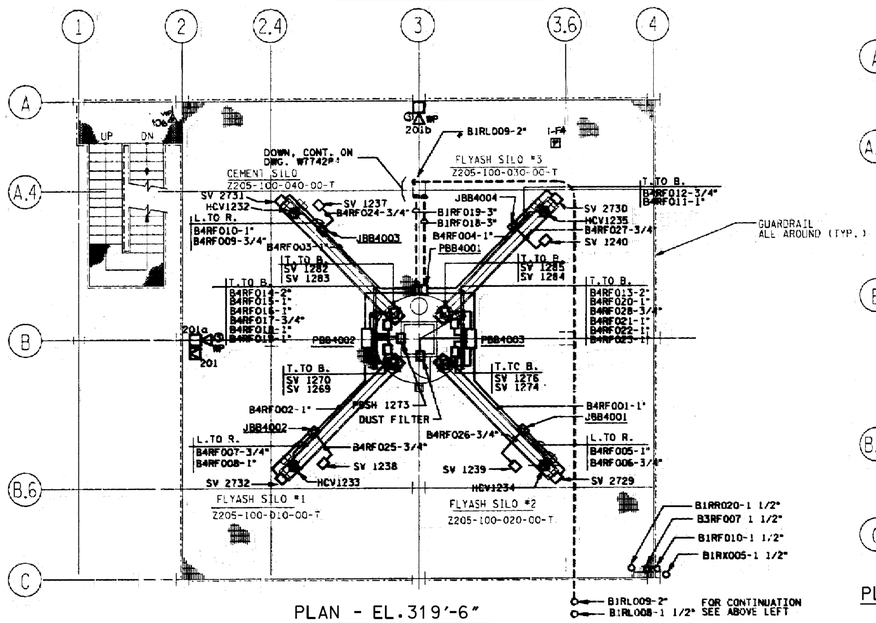

PLAN - EL.319'-6"

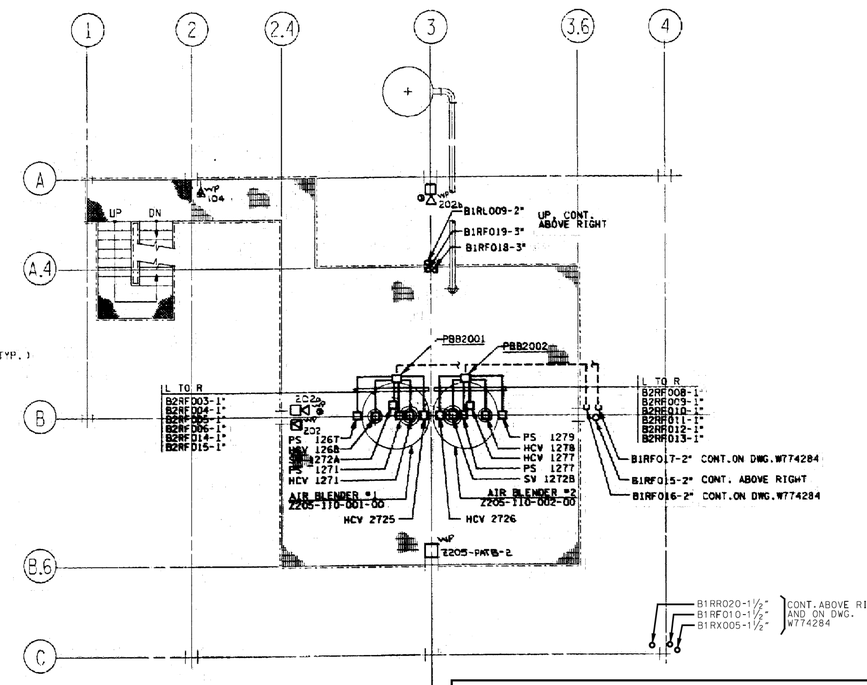

PLAN AT PLATFORM EL.300'-6"

NOTE:
USE THIS DRAWING ONLY FOR PURPOSE INDICATED IN TITLE BLOCK.
FOR ALL OTHER DATA REFER TO DWG.W775921 & W775928 FROM WHICH THIS DRAWING WAS REPRODUCED.

NOTES

1. FOR COMMUNICATION SYSTEM RISER DIAGRAM SEE DWG. W774222.
2. FOR FIRE ALARM SYSTEM SYMBOLS SEE DWG. W774224.
3. CONDUITS FOR COMMUNICATION SYSTEM SHALL BE A MINIMUM OF ¾" IMC.
4. LOCATION OF COMMUNICATION SYSTEM DEVICES MAY BE ALTERED BY SUBCONTRACTOR WITH CLIENTS' APPROVAL TO SUIT FIELD CONDITIONS.
5. RACEWAYS FOR COMMUNICATION SYSTEM ARE NOT SHOWN ON THIS PLAN DRAWING. IT WILL BE THE RESPONSIBILITY OF THE SUBCONTRACTOR TO DETAIL THE ROUTING OF THE CONDUITS AND SUPPLEMENT WITH ADDITIONAL INFORMATION AS REQUIRED FOR A COMPLETE INSTALLATION.
6. FOR PULLBOX AND JUNCTION BOX SCHEDULES SEE DS-E-160.

W774283 LAST 7 REV.

BECHTEL NATIONAL INC.
SAN FRANCISCO
JOB NO. 13239

THIS DOCUMENT CONTAINS INFORMATION RELATING TO ACTIVITIES OF THE U.S. DEPARTMENT OF ENERGY. NOT TO BE REPRODUCED OR RELEASED WITHOUT PRIOR APPROVAL.

M/F	BLDG.	PROJ.	DA	TYPE		LAST
	N/A	S1780	Z205	65	W774283	7 REV.

SAVANNAH RIVER PLANT-200S AREA
DEFENSE WASTE PROCESSING FACILITY-SLUDGE PLANT
BULK MATERIAL HANDLING
UNLOADING AREA STORAGE SILOS
EXPOSED RACEWAY PLAN & DETAILS
E&I ELECTRICAL

PROJ	NO.	REVISION	DFT	ENG	CHK	SPV	PE	DUP	DATE
S1780	A	ADDED HOIST DISCONNECT & CONDUIT							
		REVISED CONDUIT #							

PROJ	NO.	REVISION	DFT	ENG	CHK	SPV	PE	DUP	DATE
S1780	0	ISS. FOR INIT. CONST. REL.(ICR)		ORIGINAL		SIGNED			28FEB86
S1780	1	ISS.FOR FINAL CONST.REL.(FCR)		ORIGINAL		SIGNED			11JUN86
S1780	2	REISS FOR FINAL CONST REL(FCR2)		ORIGINAL		SIGNED			15JUL86
S1780	3	REISS FOR FINAL CONST REL(FC3)		ORIGINAL		SIGNED			24OCT86
S1780	4	NO CHANGES TO DESIGN CHANGED VELLUM TO MYLAR (FCR)		ORIGINAL		SIGNED			23MAR87
S1780	5	REISS FOR FINAL CONST REL(FCR)		ORIGINAL		SIGNED			28OCT87
S1780	6	INCORP. DCN 6SEP87,7770 & 989 ISSUED AS BUILT (IAB)		ORIGINAL		SIGNED			26MAY88
S1780	7	INCORP. DCN 6A & 6B		ORIGINAL		SIGNED			3APR89

STANDARDS	
W771010 THRU W771013	GEN. AREA SYMBOLS & NOTES & DETAILS

REFERENCE DRAWINGS	
W775921	SILO GEN.ARRGM'T
W775928	SILO GEN.ARRGM'T
W774284	SILOS EMBED & EXP RCWY
W754524	P&ID
W754522	P&ID

THIS DRAWING HAS BEEN FURNISHED BY E.I.DU PONT DE NEMOURS & CO. THE INFORMATION AND KNOW-HOW THEREON MAY NOT BE USED NOR THE DRAWING REPRODUCED WITHOUT THE WRITTEN PERMISSION OF DU PONT. ALL REPRODUCTIONS IN WHOLE OR IN PART, INCLUDING VENDOR'S SHOP DRAWINGS, SHALL BEAR OR REFER TO THIS STAMP.

PROJECT S1780
SCALE 3/16"=1'-0" DATE
DRAWN DM 4SEP85
CHECKED
APPROVED I.C.R. NOT REQ'D
APPROVED FINAL NOT REQ'D
DRC-3
E.I.DU PONT DE NEMOURS & CO., INC.
WILMINGTON, DELAWARE
ENGINEERING DEPARTMENT
W774283
7JAN87

BEFORE

Design Change Notice (DCN) Continuation Page

DCP No.	M-DCP-Z-11003	Revision	1	Document No.	W774283	Revision	7
DCN No.	M-DCP-Z-11003-E-00003	Revision	1	Project/Task No.	N/A	Page	3 of 4

OS61[111.66]W774283.DGD;
OS41[111.12]SPF316.DGN;
OS41[111.12]SPF316.REF;
NFO-10-13 (12/82)

ANALYZE FOR SAFETY, ECOLOGY, AND MINIMUM ESSENTIAL DESIGN

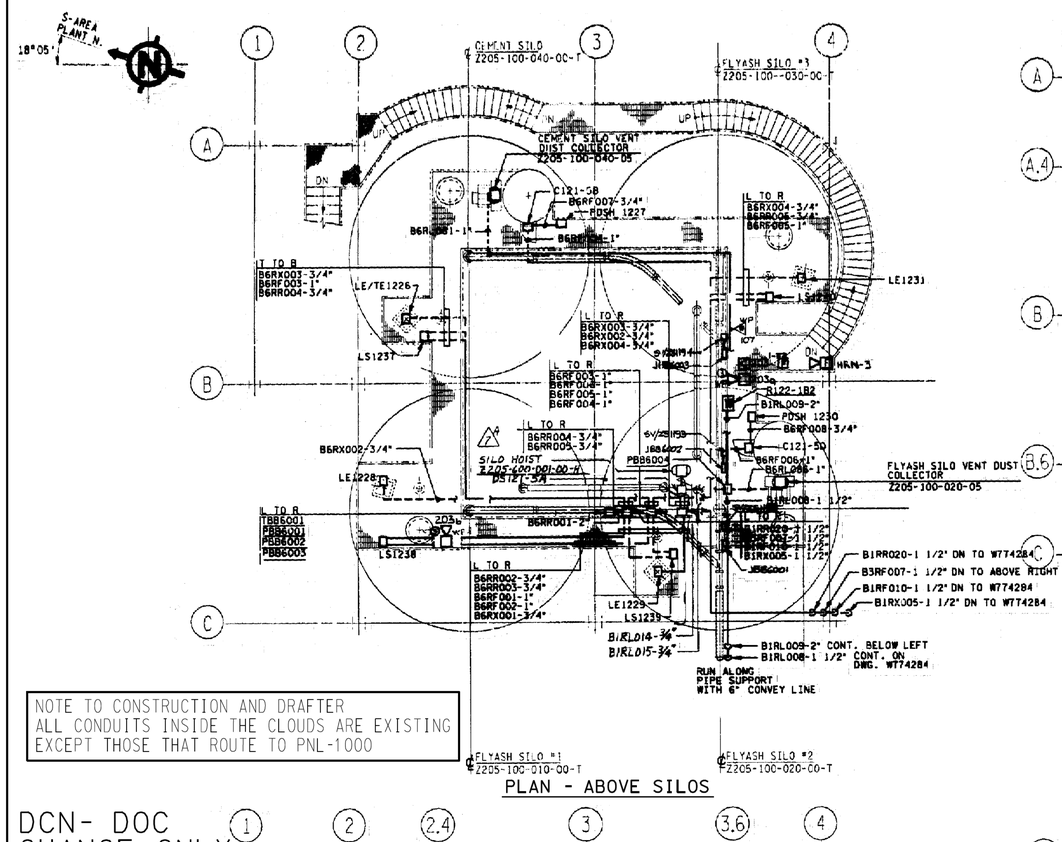

PLAN - ABOVE SILOS

NOTE TO CONSTRUCTION AND DRAFTER
ALL CONDUITS INSIDE THE CLOUDS ARE EXISTING
EXCEPT THOSE THAT ROUTE TO PNL-1000

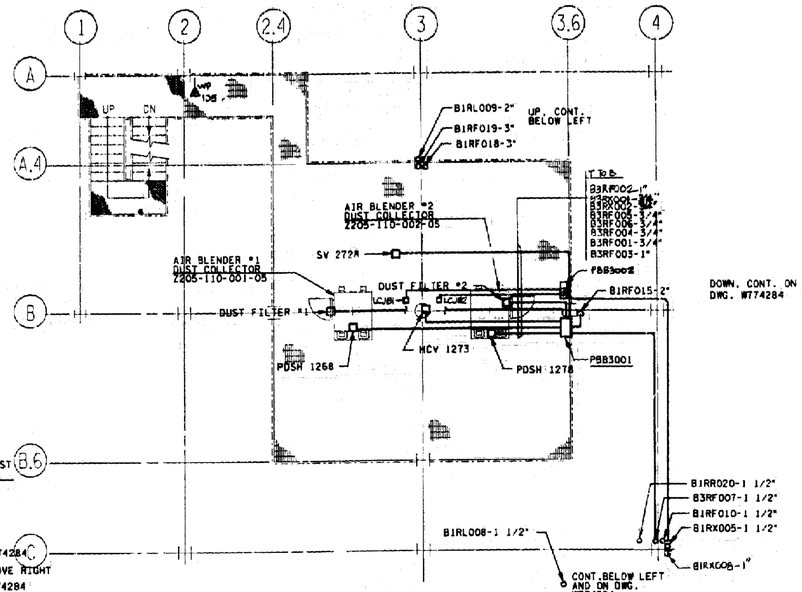

PLAN PLATFORM EL.309'-6"

NOTES

1. FOR COMMUNICATION SYSTEM RISER DIAGRAM SEE DWG. W774222.
2. FOR FIRE ALARM SYSTEM SYMBOLS SEE DWG. W774224.
3. CONDUITS FOR COMMUNICATION SYSTEM SHALL BE A MINIMUM OF ¾" IMC.
4. LOCATION OF COMMUNICATION SYSTEM DEVICES MAY BE ALTERED BY SUBCONTRACTOR WITH CLIENTS' APPROVAL TO SUIT FIELD CONDITIONS.
5. RACEWAYS FOR COMMUNICATION SYSTEM ARE NOT SHOWN ON THIS PLAN DRAWING. IT WILL BE THE RESPONSIBILITY OF THE SUBCONTRACTOR TO DETAIL THE ROUTING OF THE CONDUITS AND SUPPLEMENT WITH ADDITIONAL INFORMATION AS REQUIRED FOR A COMPLETE INSTALLATION.
6. FOR PULLBOX AND JUNCTION BOX SCHEDULES SEE DS-E-160.
7. EQUIPMENT IS PREFIXED AS:
   * Z-205000-BMH-
8. CONDUITS ARE PREFIXED AS: B5R UNLESS NOTED OTHERWISE.

DCN

W774283 | LAST 7 REV.

DCN- DOC CHANGE ONLY

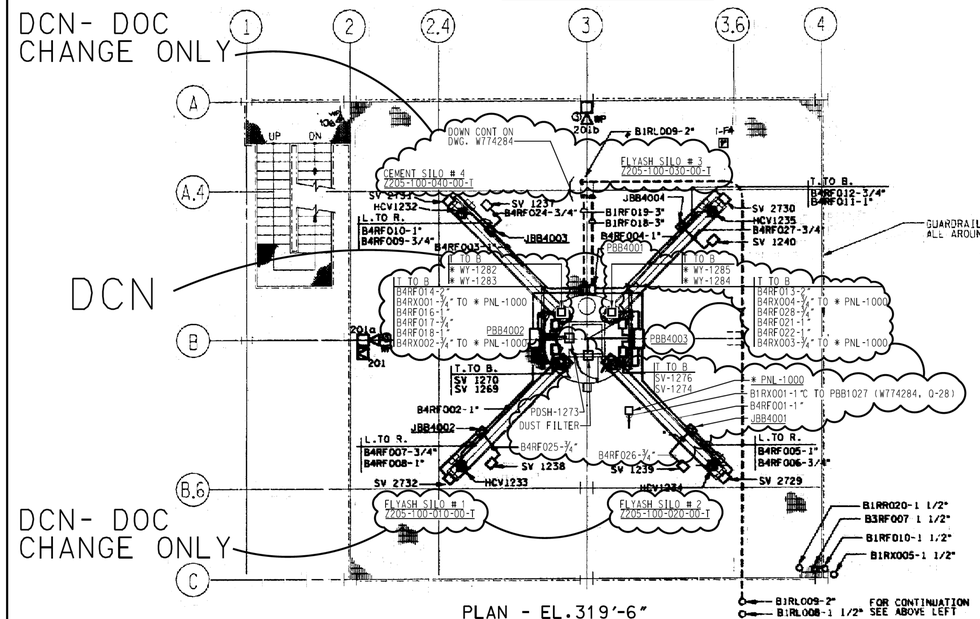

PLAN - EL.319'-6"

DCN

DCN- DOC CHANGE ONLY

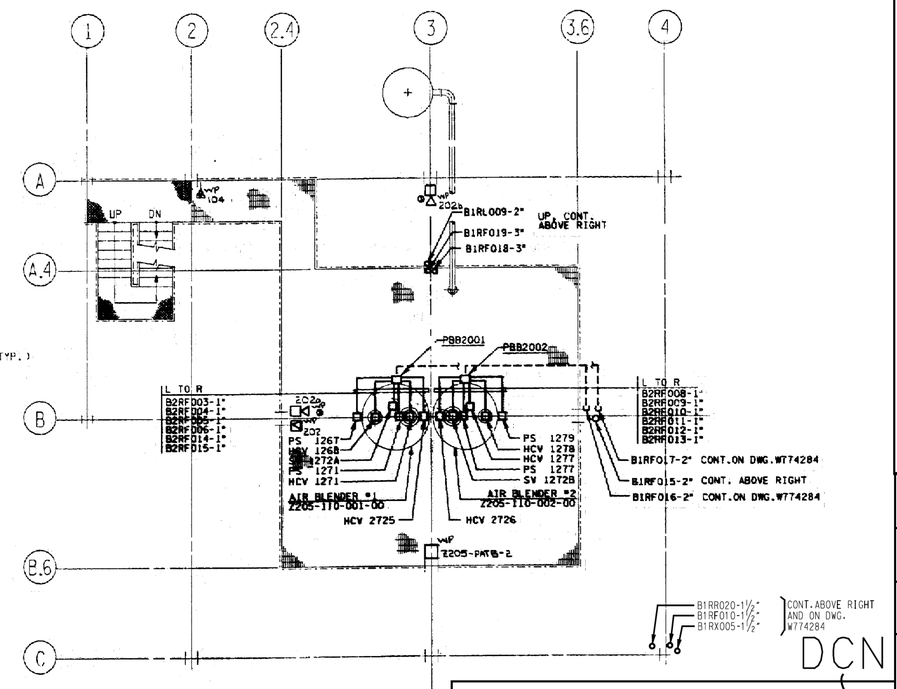

PLAN AT PLATFORM EL.300'-6"

DCN

NOTE:
USE THIS DRAWING ONLY FOR PURPOSE INDICATED IN TITLE BLOCK.
FOR ALL OTHER DATA REFER TO DWG.W775921 & W775928 FROM WHICH THIS DRAWING WAS REPRODUCED.

BECHTEL NATIONAL INC.
SAN FRANCISCO

JOB NO. 13239

THIS DOCUMENT CONTAINS INFORMATION RELATING TO ACTIVITIES OF THE U.S. DEPARTMENT OF ENERGY. NOT TO BE REPRODUCED OR RELEASED WITHOUT PRIOR APPROVAL.

M/F	BLDG.	PROJ.	DA	TYPE		
	N/A	S1780	Z205	65	W774283	LAST 7 REV.

SAVANNAH RIVER PLANT-200S AREA
DEFENSE WASTE PROCESSING FACILITY-SLUDGE PLANT
BULK MATERIAL HANDLING
UNLOADING AREA STORAGE SILOS
EXPOSED RACEWAY PLAN & DETAILS
ELECTRICAL

E&I

PROJ	NO.	REVISION	DFT	ENG	CHK	SPV	PE	DUP	DATE
S1780	4	ADDED HOIST DISCONNECT & CONDUIT							
		REVISED CONDUIT #							
S1780	0	ISS. FOR INIT. CONST. REL.(ICR)	ORIGINAL		SIGNED				28FEB86
S1780	1	ISS.FOR FINAL CONST.REL.(FCR)	ORIGINAL		SIGNED				11JUN86
S1780	2	REISS FOR FINAL CONST REL(FCR2)	ORIGINAL		SIGNED				15JUL86
S1780	3	REISS FOR FINAL CONST REL(FC3)	ORIGINAL		SIGNED				24OCT86
S1780	4	NO CHANGES TO DESIGN CHANGED VELLUM TO MYLAR (FCR)	ORIGINAL		SIGNED				23MAR87
S1780	5	REISS FOR FINAL CONST REL(FCR)	ORIGINAL		SIGNED				28OCT87
S1780	6	INCORP. IDW #557,757,770 & 989 ISSUED AS BUILT (IAB)	ORIGINAL		SIGNED				26MAY88
S1780	7	INCORP. DCN 6A & 6B	ORIGINAL		SIGNED				3APR89

STANDARDS		
W771010 THRU W771013	GEN. AREA SYMBOLS NOTES & DETAILS	

REFERENCE DRAWINGS		
W775921	SILO GEN. ARRGMT	
W775928	SILO GEN. ARRGMT SILOS EMBED & EXP RCWT	
W774284		
W754524	P&ID	
W754522	P&ID	

THIS DRAWING HAS BEEN FURNISHED BY E.I.DU PONT DE NEMOURS & CO. THE INFORMATION AND KNOW-HOW THEREON MAY NOT BE USED NOR THE DRAWING REPRODUCED WITHOUT THE WRITTEN PERMISSION OF DU PONT. ALL REPRODUCTIONS IN WHOLE OR IN PART, INCLUDING VENDOR'S SHOP DRAWINGS, SHALL BEAR OR REFER TO THIS STAMP.

		DATE
PROJECT	S1780	
SCALE	3/16"=1'-0"	
DRAWN	DM	15SEP85
CHECKED		
APPROVED I.C.R.	NOT REQ'D	
APPROVED FINAL	NOT REQ'D	

DRC-3 DUPONT
E.I.DU PONT DE NEMOURS & CO., INC.
WILMINGTON, DELAWARE
ENGINEERING DEPARTMENT
W774283
7JAN87

AFTER

Design Change Notice (DCN) Continuation Page

DCP No.	M-DCP-Z-11003	Revision	1	Document No.	W774283	Revision	7
DCN No.	M-DCP-Z-11003-E-00003	Revision	1	Project/Task No.	N/A	Page	4 of 4

QSG:(111.661W774283.DGD;
QSG:(111.123SPF316.DGN;
QSG:(111.123SPF316.DGN;
NO-10-13 (12/82)

Design Change Notice (DCN)

DCP Number	Revision	
M-DCP-Z-11003	1	
DCN No.	**Revision**	**Project/Task No**
M-DCP-Z-11003-J-00001	1	N/A

Design Change Notice (DCN)

Classification Reviewer: N/A

Date: 05/21/2019

Design Change Notice (DCN)

DCP Number	Revision	
M-DCP-Z-11003	1	
DCN No.	**Revision**	**Project/Task No**
M-DCP-Z-11003-J-00001	1	N/A

Document No. (Doc Rev)
AC52406A-6;DE1

Reason for Change (Be specific)
Provide Upgrade information for Weigh Hopper

Description of Change
Remove weigh Hopper inlet valve indicator lights (4 each) and add new v-notch slide gate valve percent indications (4 each) for the graphics panel

Engineering Approvals

Originator	Date	Responsible Engineer Manager	Date
WALKER, DENNIS E.	05/20/2019	SUD, RAJENDRA J.	05/21/2019

Verifier/Checker	Date	Discipline
HEVEL, STEPHEN D.	05/20/2019	J-INSTRUMENTATION AND CONTROLS

Verification Method(s)
Design Check (GS/PS only)

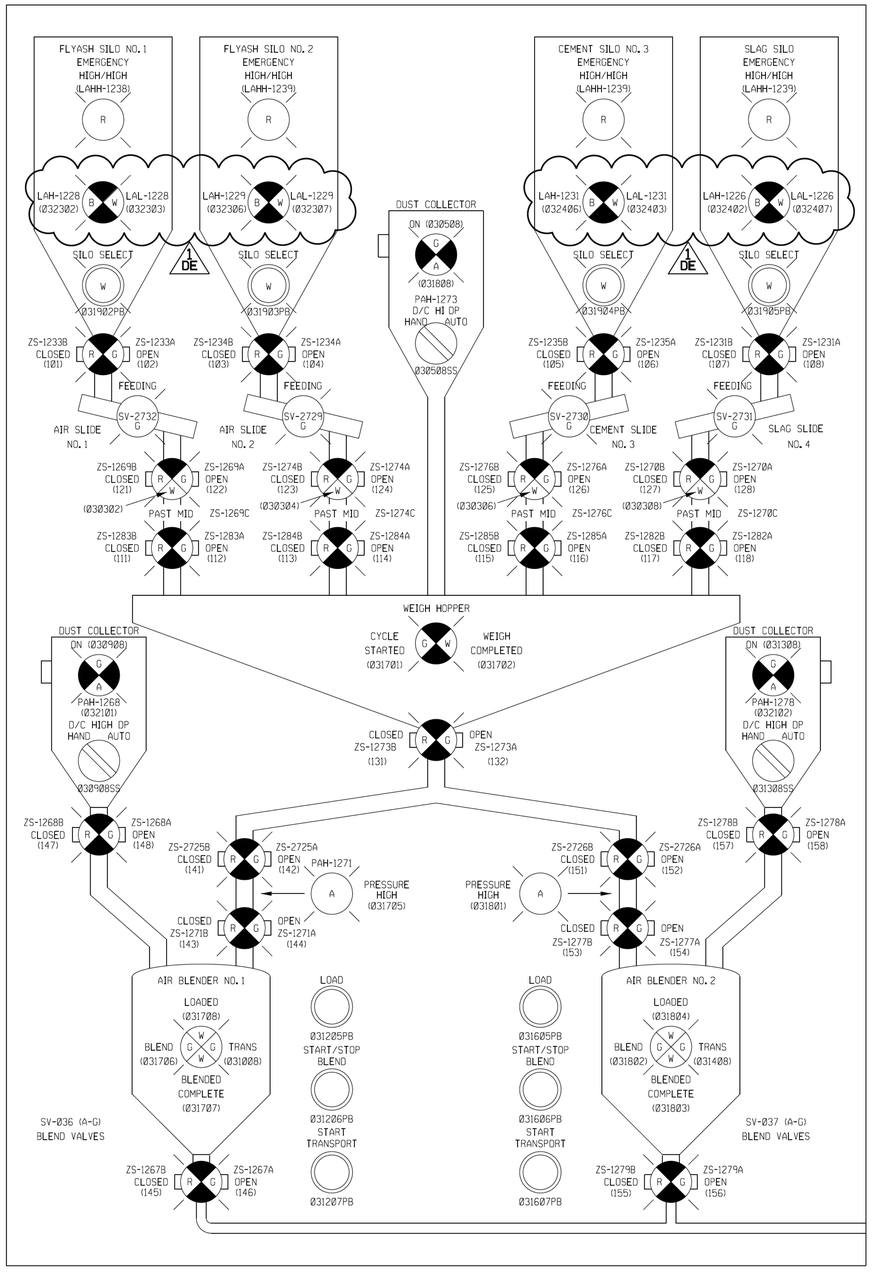

Savannah River Site

Supplier Document Status

- [x] 1. Work May Proceed
- [ ] 2. Submit Final Document-Work May Proceed
- [ ] 3. Revise and Resubmit Work- May Proceed Subject to Resolution of Indicated Comments
- [ ] 4. Revise and Resubmit-Work May Not Proceed
- [ ] 5. Permission to Proceed Not Required

PKG. # 25705

Permission to proceed does not constitute acceptance or approval of design details, calculations, test methods, analysis or materials developed or selected by the supplier, and does not relieve supplier from full compliance with contractual obligations or release of any "holds" placed on the contract.

AC52406A-006-A-MT2

Document Category: 1.2

Date: 1/30/2007

Reviewer: Madanjit Singh

Rev. No.	Orig. No.	Changes/Comments	Orig. Date	Checker Date	Approver Date	
DE1	N/A	INCORPORATED J-DCP-Z-070002-J-0008	APPROVALS	MAINTAINED	M-DCP-ENGS	SRS Revision To Supplier Document

REV	DATE	REVISION NOTE	BY	APP'D BY	SCALE
5					
4					
3					
2	1/2/07	MISC REV	BR		
1	12/11/06	TITLE BLOCK REV	BR	DRAWN BY BR	DATE 11/7/06

TITLE: CONTROL PANEL LAYOUT
LEFT DOOR LAYOUT

U.S. DEPARTMENT OF ENERGY
SAVANNAH RIVER SITE

CATALOG NO.

NOL-TEC SYSTEMS, INC.
MATERIAL CONVEYING AND CONTROL SPECIALISTS
LAKE ZURICH, IL

© 1998, UNPUBLISHED

DRAWING NO. 10879-4

SHT 02 OF 05

BEFORE

Design Change Notice (DCN)
Continuation Page

DCP No. M-DCP-Z-11003	Revision 1	Document No. AC52406A-6	Revision DE1
DCN No. M-DCP-Z-11003-J-00001	Revision 1	Project/Task No. N/A	Page 3 of 5

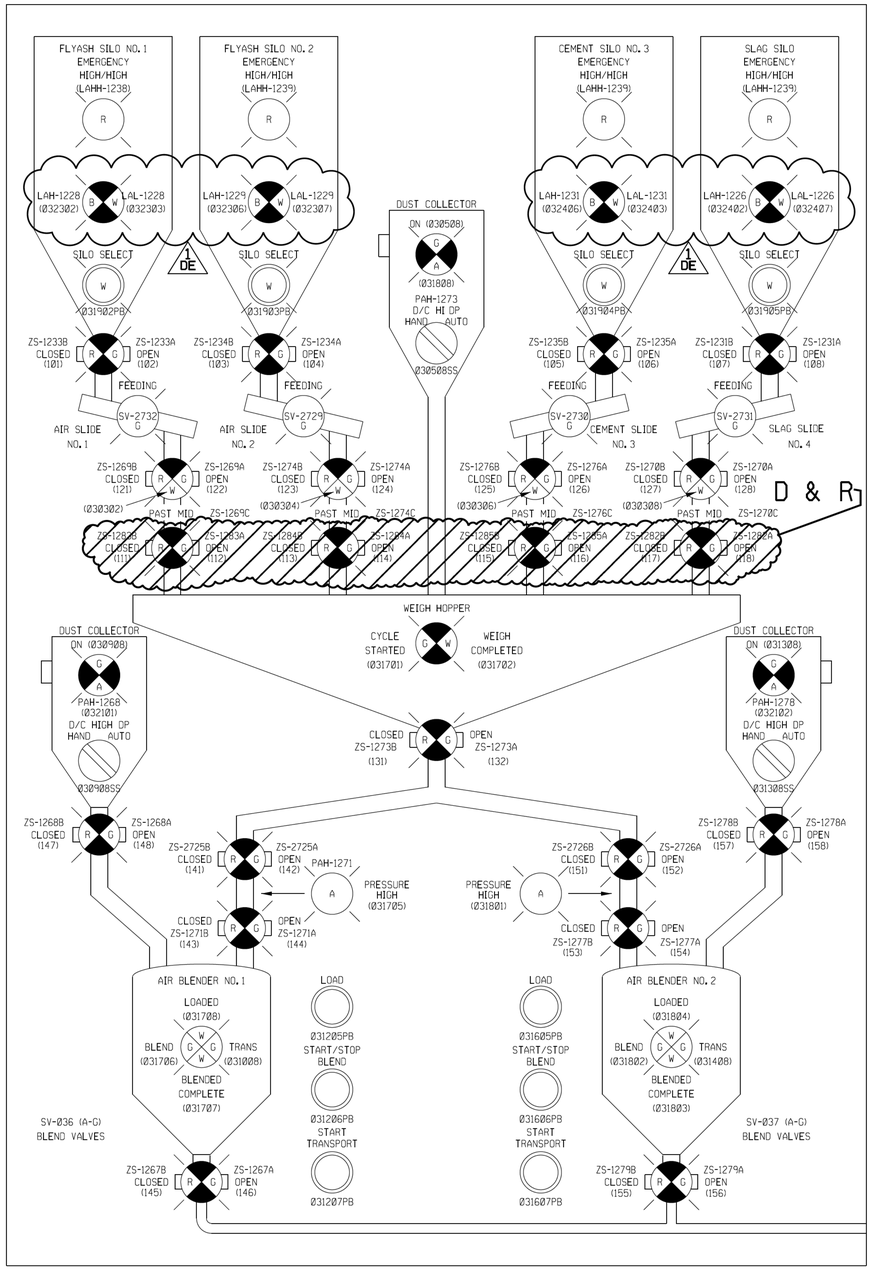

Savannah River Site

Supplier Document Status

- [x] 1. Work May Proceed
- [ ] 2. Submit Final Document-Work May Proceed
- [ ] 3. Revise and Resubmit Work- May Proceed Subject to Resolution of Indicated Comments
- [ ] 4. Revise and Resubmit-Work May Not Proceed
- [ ] 5. Permission to Proceed Not Required

PKG. # 25705

Permission to proceed does not constitute acceptance or approval of design details, calculations, test methods, analysis or materials developed or selected by the supplier, and does not relieve supplier from full compliance with contractual obligations or release of any "holds" placed on the contract.

AC52406A-006-A-MT2

Document Category: 1.2

Date: 1/30/2007

Reviewer: Madanjit Singh

Rev. No.	Rev. Date	Changes/Comments	Orig. Date	Checker Date	Approver Date
DE1	N/A	INCORPORATED J-DCP-Z-070002-J-008	APPROVALS MAINTAINED ON FILE		

SRS Revision To Supplier Document

REV	DATE	REVISION NOTE	BY
4			
3			
2			
1	1/2/07	MISC REV	BR
0	12/11/06	TITLE BLOCK REV	BR

TITLE: CONTROL PANEL LAYOUT LEFT DOOR LAYOUT

U.S. DEPARTMENT OF ENERGY SAVANNAH RIVER SITE

DRAWN BY: BR DATE: 11/7/06

APP'D BY: SCALE:

CATALOG NO.

NOL-TEC SYSTEMS, INC. MATERIAL CONVEYING AND CONTROL SPECIALISTS LAKE ELMO, MN

© 1998, UNPUBLISHED

DRAWING NO. 10879-4 SHT 02 OF 05

Design Change Notice (DCN) Continuation Page

D & R

DCP No. M-DCP-Z-11003	Revision 1	Document No. AC52406A-6	Revision DE1
DCN No. M-DCP-Z-11003-J-00001	Revision 1	Project/Task No. N/A	Page 4 of 5

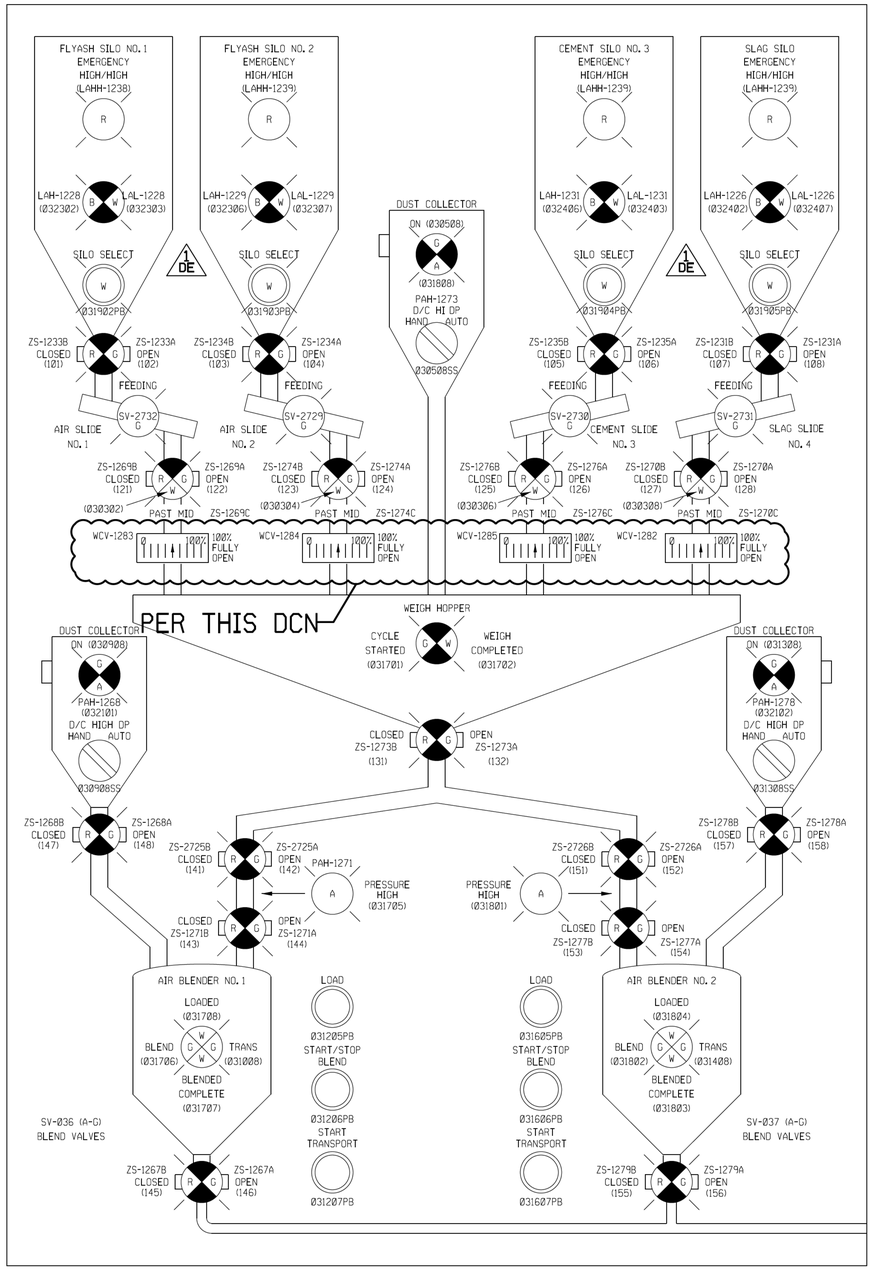

Savannah River Site

Supplier Document Status

- [x] 1. Work May Proceed
- [ ] 2. Submit Final Document-Work May Proceed
- [ ] 3. Revise and Resubmit Work- May Proceed Subject to Resolution of Indicated Comments
- [ ] 4. Revise and Resubmit-Work May Not Proceed
- [ ] 5. Permission to Proceed Not Required

PKG.# 25705

Permission to proceed does not constitute acceptance or approval of design details, calculations, test methods, analysis or materials developed or selected by the supplier, and does not relieve supplier from full compliance with contractual obligations or release of any "holds" placed on the contract.

AC52406A-006-A-MT2

Document Category: 1.2

Date: 1/30/2007

Reviewer: Madanjit Singh

Rev. No.	Mod No.	Changes/Comments	Orig Date	Checker Date	Approver Date	
DE1	N/A	INCORPORATED J-DCP-Z-01002-J-008	APPROVALS MAINTAINED ON FILE			BRS Revision To Supplier Document

REV	DATE	REVISION NOTE	BY
3			
2			
1			
2	1/2/07	MISC REV	BR
1	12/11/06	TITLE BLOCK REV	BR

TITLE: CONTROL PANEL LAYOUT LEFT DOOR LAYOUT

U.S. DEPARTMENT OF ENERGY SAVANNAH RIVER SITE

NOL-TEC SYSTEMS, INC. MATERIAL CONVEYING AND CONTROL SPECIALISTS LINO LAKES, MN

© 1998, UNPUBLISHED

DRAWN BY: BR | DATE: 11/7/06 | APP'D BY: | SCALE:

DRAWING NO. 10879-4 | SHT 02 OF 05

CATALOG NO.

AFTER

Design Change Notice (DCN) Continuation Page

DCP No. M-DCP-Z-11003	Revision 1	Document No. AC52406A-6	Revision DE1
DCN No. M-DCP-Z-11003-J-00001	Revision 1	Project/Task No. N/A	Page 5 of 5

Design Change Notice (DCN)

DCP Number	Revision	
M-DCP-Z-11003	1	
DCN No. M-DCP-Z-11003-J-00002	**Revision** 1	**Project/Task No** N/A

Design Change Notice (DCN)

Classification Reviewer: N/A

Date: 05/21/2019

Design Change Notice (DCN)

DCP Number	Revision	
M-DCP-Z-11003	1	
DCN No.	**Revision**	**Project/Task No**
M-DCP-Z-11003-J-00002	1	N/A

Document No. (Doc Rev)
AC52406A-9;DE1

Reason for Change (Be specific)
Provide Upgrade information for Weigh Hopper

Description of Change
Add I/O CARD TO SUBPANEL

Engineering Approvals

Originator	Date	Responsible Engineer Manager	Date
WALKER, DENNIS E.	05/20/2019	SUD, RAJENDRA J.	05/21/2019

Verifier/Checker	Date	Discipline
HEVEL, STEPHEN D.	05/21/2019	J-INSTRUMENTATION AND CONTROLS

Verification Method(s)
Design Check (GS/PS only)

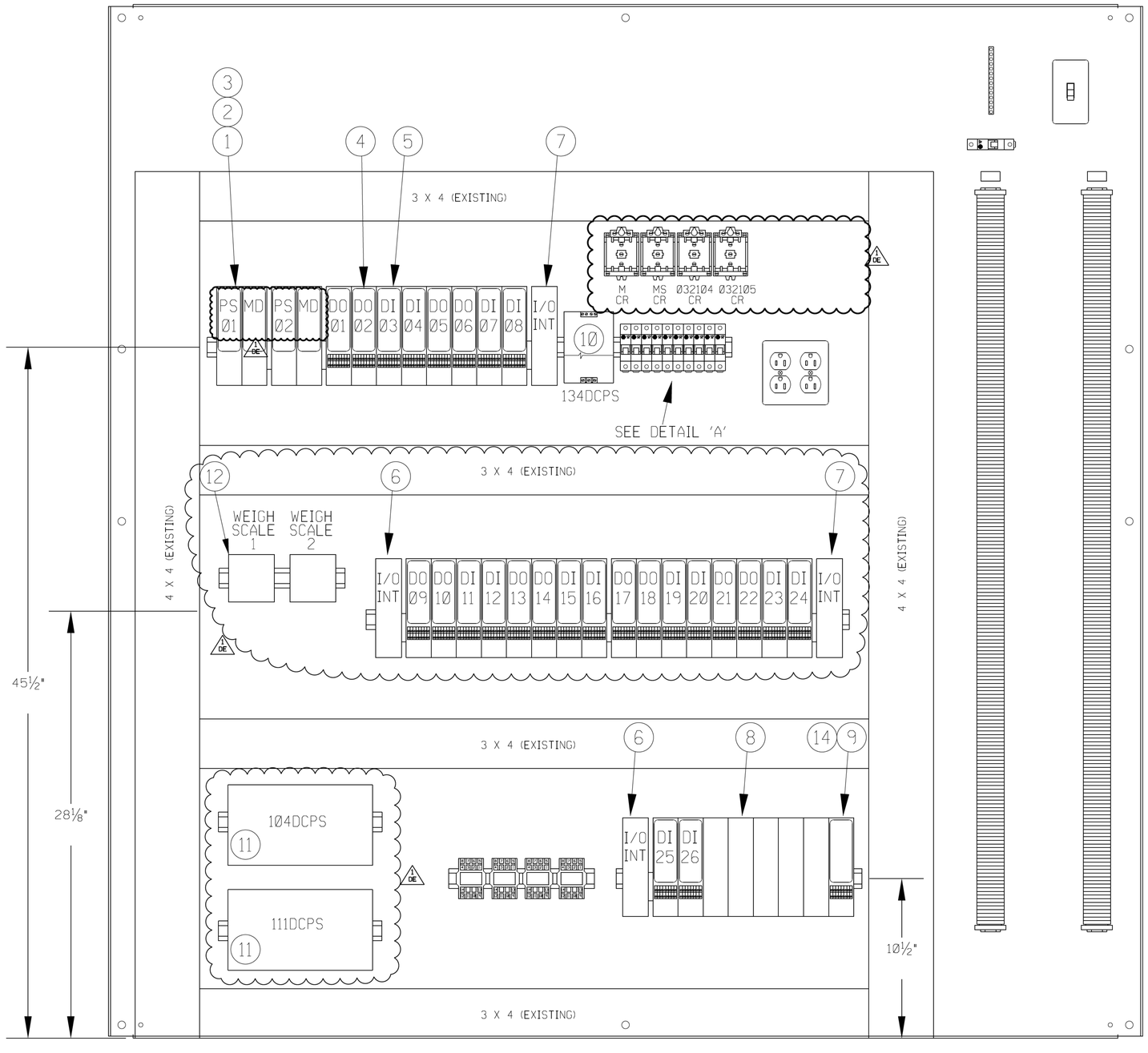

ITEM NO.	QTY	MFGR	PART NUMBER	ITEM DESCRIPTION
1	2	DELTA-V	VE5008	POWER SUPPLY, PASS THROUGH
2	2	DELTA-V	VE3005x	MD CONTROLLER
3	2	DELTA-V	VE3051C0	2-WIDE POWER/CONTROLLER CARRIER
4	14	DELTA-V	VE4001S3T1B2	DISCRETE INPUT CARD, 8 CHANNELS, 120 VAC, ISOLATED
5	12	DELTA-V	VE4002S2T1B2	DISCRETE OUTPUT CARD, 115/230 VAC, ISOLATED, FUSED I/O TERMINAL BLOCK
6	2	DELTA-V	VE4050S2K1C0	8-WIDE I/O INTERFACE CARRIER WITH CARRIER SHIELD BAR
7	2	DELTA-V	VE4050E1C0	8-WIDE I/O INTERFACE CARRIER WITH CARRIER EXTENSION CABLE AND CARRIER SHIELD BAR
8	5	DELTA-V	VE6101	CARRIER BLANK CAP
9	1	DELTA-V	VE4016	SIMPLEX DEVICE NET I/O INTERFACE CARD AND TERMINAL BLOCK
10	1	SOLA	SDN 10-24-100P	DC POWER SUPPLY, 24 VDC, 10A
11	2	ACOPIAN	W12MT23	SWITCHING REGULATED POWER SUPPLY, DIN RAIL MOUNT, 120VAC/120VDC, 23A
12	2	HARDY	HI 4050	DIGITAL WEIGHT CONTROLLER
13	1	AB	2711-B5A10	PANELVIEW 550, WITH KEYPAD AND TOUCHSCREEN
14	2	AB	1485A-C2	TERMINATING RESISTOR
15	10	AB	1492-FB1C30-L	AB, FUSEHOLDER 30A, 1 POLE
16	1	HARDY	4000-DIS	HARDY, WAVESAVER WEIGHT CONTROLLER DISPLAY/KEYBOARD FOR HI 4050

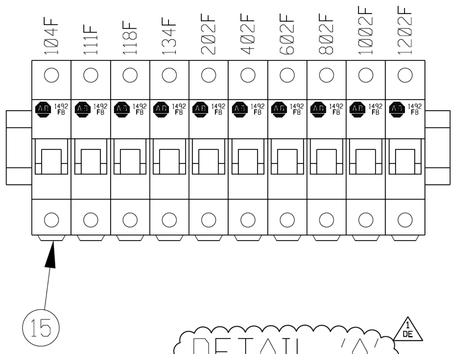

LOS-302
Z-210000-DCS-PCM-C0N03

Savannah River Site

Supplier Document Status

- [x] 1. Work May Proceed
- [ ] 2. Submit Final Document-Work May Proceed
- [ ] 3. Revise and Resubmit Work- May Proceed Subject to Resolution of Indicated Comments
- [ ] 4. Revise and Resubmit-Work May Not Proceed
- [ ] 5. Permission to Proceed Not Required

PKG. # 25705

Permission to proceed does not constitute acceptance or approval of design details, calculations, test methods, analysis or materials developed or selected by the supplier, and does not relieve supplier from full compliance with contractual obligations or release of any "holds" placed on the contract.

AC52406A-009-A-MT2

Document Category: 1.2

Date: 1/30/07

Reviewer: M. SINGH

* NOTE: ITEM 13 & 16 ON BOM ARE NOT SHOWN. CUSTOMER TO INSTALL.

Rev. No.	Incl No.	Changes/Comments	Orig Date	Checker Date	Approver Date	
DE1	N/A	INCORP. J-DCF-2-00398, J-DCF-2-00726 J-DCF-2-00002-J-006, E-DCF-2-00416	APPROVALS	MAINTAINED	IN-PROGRESS	SRS Revision To Supplier Document

REV	DATE	REVISION NOTE	BY	APP'D BY
4				
3				
2				
1	1/2/07	MISC REV		
0	12/11/06	ADDED FUSES AND CUSTOMER POWER SUPPLIES		

TITLE: SUBPANEL LAYOUT

U.S. DEPARTMENT OF ENERGY
SAVANNAH RIVER SITE

NOL-TEC SYSTEMS, INC.
MATERIAL CONVEYING AND CONTROL SPECIALISTS
LAKE ZURICH, IL

© 1998, UNPUBLISHED

DRAWN BY: BR
DATE: 6/01/06
SCALE:
DRAWING NO. 10879-4
SHT 05 OF 05

CATALOG NO.

BEFORE

Design Change Notice (Continued)
DCN

DCP No.	M-CDP-Z-11003	Document No.	AC52406A-9
DCN No.	M-CDP-Z-11003-J-00002	Project No.	N/A
Revision	1	Revision	1
Revision		Revision	DE1
		Page	3 of 4

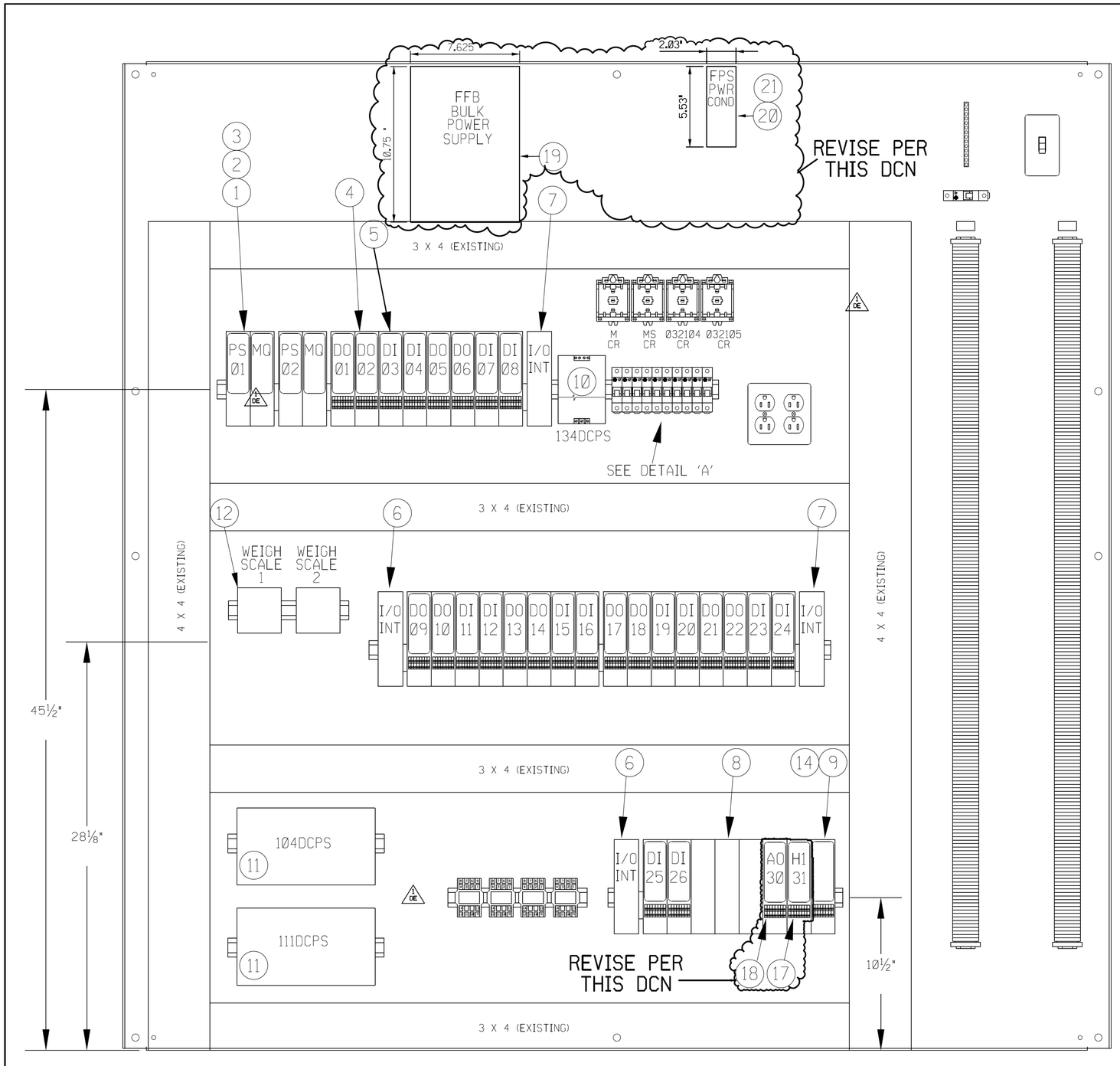

ITEM NO.	QTY	MFGR	PART NUMBER	ITEM DESCRIPTION
1	2	DELTA-V	VE5008	POWER SUPPLY, PASS THROUGH
2	2	DELTA-V	VE3008	MQ CONTROLLER
3	2	DELTA-V	VE3051C0	2-WIDE POWER/CONTROLLER CARRIER
4	14	DELTA-V	VE4001S3T1B2	DISCRETE INPUT CARD, 8 CHANNELS, 120 VAC, ISOLATED
5	12	DELTA-V	VE4002S2T1B2	DISCRETE OUTPUT CARD, 115/230 VAC, ISOLATED, FUSED I/O TERMINAL BLOCK
6	2	DELTA-V	VE4052S2K1C0	8-WIDE I/O INTERFACE CARRIER WITH CARRIER SHIELD BAR
7	2	DELTA-V	VE4050E1C0	8-WIDE I/O INTERFACE CARRIER WITH CARRIER EXTENSION CABLE AND CARRIER SHIELD BAR
8	5	DELTA-V	VE6101	CARRIER BLANK CAP
9	1	DELTA-V	VE4016	SIMPLEX DEVICE NET I/O INTERFACE CARD AND TERMINAL BLOCK
10	1	SOLA	SDN 10-24-100P	DC POWER SUPPLY, 24 VDC, 10A
11	2	ACOPIAN	W12MT29	SWITCHING REGULATED POWER SUPPLY, DIN RAIL MOUNT, 120VAC/12VDC, 29A
12	2	HARDY	HI 4050	DIGITAL WEIGHT CONTROLLER
13	1	AB	2711-B5A10	PANELVIEW 550, WITH KEYPAD AND TOUCHSCREEN
14	2	AB	1485A-C2	TERMINATING RESISTOR
15	111	AB	1492-FB1C30-L	AB, FUSEHOLDER 30A, 1 POLE
16	1	HARDY	4000-DIS	HARDY, WAVESAVER WEIGHT CONTROLLER DISPLAY/KEYBOARD FOR HI 4050
17	1	DELTA-V	VE4017PD	HI I/O CARD, FOUNDATION FIELDBUS INTERFACE AND TERMINAL BLOCK
18	1	DELTA-V	VE4005S2B1	ANALOG OUTPUT CARD; 8 CHANNEL, 4-20 ma
19	1	PEPPERL-FUCHS	PS3500-PM-1.24.15	BULK POWER SUPPLY W/POWER SUPPLY BACKPLANE PS3500-TB-3-N-1
20	1	COOPER	FPS-1	REDUNDANT FIELDBUS POWER SYSTEM
21	2	COOPER	FPS-1PM	POWER MODULE

REVISE PER THIS DCN

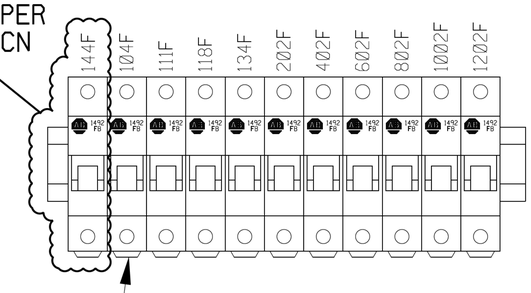

DETAIL 'A'

LOS-302
Z-210000-DCS-PCM-C0N03

* NOTE: ITEM 13 & 16 ON BOM ARE NOT SHOWN. CUSTOMER TO INSTALL.

Savannah River Site

Supplier Document Status

- [x] 1. Work May Proceed
- [ ] 2. Submit Final Document-Work May Proceed
- [ ] 3. Revise and Resubmit Work- May Proceed Subject to Resolution of Indicated Comments
- [ ] 4. Revise and Resubmit-Work May Not Proceed
- [ ] 5. Permission to Proceed Not Required

PKG.# 25705

Permission to proceed does not constitute acceptance or approval of design details, calculations, test methods, analysis or materials developed or selected by the supplier, and does not relieve supplier from full compliance with contractual obligations or release of any "holds" placed on the contract.

AC52406A-009-A-MT2

Document Category: 1.2

Date: 1/30/07

Reviewer: M. SINGH

Rev. No.	Mod. No.	Changes/Comments	Orig. Date	Checker Date	Approver Date
DE1	N/A	INCORP. J-OCF-Z-00396, J-OCF-Z-00726 J-OCF-Z-00922-J-006, E-OCF-Z-00416	APPROVALS	MAINTAINED	IN-DOCUMENTS

SRS Revision To Supplier Document

REV	DATE	REVISION NOTE	BY	APP'D BY
4				
3				
2				
1	1/2/07	MISC REV		
0	12/11/06	ADDED FUSES AND CUSTOMER POWER SUPPLIES		

TITLE: SUBPANEL LAYOUT

U.S. DEPARTMENT OF ENERGY
SAVANNAH RIVER SITE

NOL-TEC SYSTEMS, INC.
MATERIAL CONVEYING AND CONTROL SPECIALISTS
LAKE ZURICH, IL

© 1998, UNPUBLISHED

CATALOG NO.

DRAWN BY: BR | DATE: 6/01/06 | SCALE | DRAWING NO. 10879-4 | SHT 05 OF 05

AFTER

Design Change Notice (Continued)
DCN

DCP No. M-OCP-Z-11003 | Revision: 1 | Document No. AC52406A-9 | Revision: DE1
DCN No. M-OCP-Z-11003-J-00002 | Revision: 1 | Project No. N/A | Page 4 of 4

Design Change Notice (DCN)

DCP No.		Revision	
M-DCP-Z-11003		0	
DCN No.	**Revision**	**Project/Task No**	**Document No. (Doc Rev)**
M-DCP-Z-11003-J-00003	0	N/A	AC52406A-10;A

Reason for Change (Be specific)

Provide Upgrade information for Weigh Hopper

Description of Change

ADD I/O CARD TO BILL OF MATERIAL

Engineering Approvals

Originator		Checker/Verifier	Date	Responsible Engineering Manager	Date
VONBECK, HENRY H	8/29/2012	DOSTER, THOMAS DANIEL	8/29/2012	CAMPBELL, MICHAEL W	8/29/2012

ITEM NO.	QTY	MFGR	PART NUMBER	ITEM DESCRIPTION
1	2	DELTA-V	VE5008	POWER SUPPLY, PASS THROUGH
2	2	DELTA-V	VE3005x	MD CONTROLLER
3	2	DELTA-V	VE3051C0	2-WIDE POWER/CONTROLLER CARRIER
4	14	DELTA-V	VE4001S3T1B2	DISCRETE INPUT CARD, 8 CHANNELS, 120 VAC, ISOLATED
5	12	DELTA-V	VE4002S2T1B2	DISCRETE OUTPUT CARD, 115/230 VAC, ISOLATED, FUSED I/O TERMINAL BLOCK
6	2	DELTA-V	VE4050S2K1C0	8-WIDE I/O INTERFACE CARRIER WITH CARRIER SHIELD BAR
7	2	DELTA-V	VE4050E1C0	8-WIDE I/O INTERFACE CARRIER WITH CARRIER EXTENSION CABLE AND CARRIER SHIELD BAR
8	5	DELTA-V	VE6101	CARRIER BLANK CAP
9	1	DELTA-V	VE4016	SIMPLEX DEVICE NET I/O INTERFACE CARD AND TERMINAL BLOCK
10	1	SOLA	SDN 10-24-100P	DC POWER SUPPLY, 24 VDC, 10A
11	2	DELTA-V		BULK POWER SUPPLY DIN RAIL MOUNT, AC TO DC 24
12	2	HARDY	HI 4050	DIGITAL WEIGHT CONTROLLER
13	1	AB	2711-B5A10	PANELVIEW 550, WITH KEYPAD AND TOUCHSCREEN
14	2	AB	1485A-C2	TERMINATING RESISTOR
15	10	AB	1492-FB1C30-L	AB, FUSEHOLDER 30A, 1 POLE
16	1	HARDY	4000-DIS	HARDY, WAVESAVER WEIGHT CONTROLLER DISPLAY/KEYBOARD FOR HI 4050

Savannah River Site

Supplier Document Status

- [x] 1. Work May Proceed
- [ ] 2. Submit Final Document-Work May Proceed
- [ ] 3. Revise and Resubmit Work- May Proceed Subject to Resolution of Indicated Comments
- [ ] 4. Revise and Resubmit-Work May Not Proceed
- [ ] 5. Permission to Proceed Not Required

PKG. # 25705

Permission to proceed does not constitute acceptance or approval of design details, calculations, test methods, analysis or materials developed or selected by the supplier, and does not relieve supplier from full compliance with contractural obligations or release of any "holds" placed on the contract.

AC52406A-010-A-NT2

Document Catagory: 1.1

Date: 1/30/2007

Reviewer: M. SINGH

REV	DATE	REVISION NOTE	BY
0	-		
0	-		
0	-		
0	-		
0	-		

TITLE: BILL OF MATERIAL

U.S. DEPARTMENT OF ENERGY
SAVANNAH RIVER SITE

DRAWN BY: BR | DATE: 1/3/07
APP'D BY: | SCALE:

CATALOG NO.

NOL-TEC SYSTEMS, INC.
MATERIAL CONVEYING AND CONTROL SPECIALISTS
LAKE ZURICH, IL

© 1998, UNPUBLISHED

DRAWING NO. 10879-5

SHT 01 OF 01

BEFORE Design Change Notice (Continued)
DCN

CONTRACT NO. W-SCP-2-11003	Revision 0	Document No. AC52406A-010-A-NT2	Revision 0
LOCATION J00003	Revision 0	Project No. N/A	Page 2 of 2

ITEM NO.	QTY	MFGR	PART NUMBER	ITEM DESCRIPTION
1	2	DELTA-V	VE5008	POWER SUPPLY, PASS THROUGH
2	2	DELTA-V	VE3005x	MD CONTROLLER
3	2	DELTA-V	VE3051C0	2-WIDE POWER/CONTROLLER CARRIER
4	14	DELTA-V	VE4001S3T1B2	DISCRETE INPUT CARD, 8 CHANNELS, 120 VAC, ISOLATED
5	12	DELTA-V	VE4002S2T1B2	DISCRETE OUTPUT CARD, 115/230 VAC, ISOLATED, FUSED I/O TERMINAL BLOCK
6	2	DELTA-V	VE4050S2K1C0	8-WIDE I/O INTERFACE CARRIER WITH CARRIER SHIELD BAR
7	2	DELTA-V	VE4050E1C0	8-WIDE I/O INTERFACE CARRIER WITH CARRIER EXTENSION CABLE AND CARRIER SHIELD BAR
8	5	DELTA-V	VE6101	CARRIER BLANK CAP
9	1	DELTA-V	VE4016	SIMPLEX DEVICE NET I/O INTERFACE CARD AND TERMINAL BLOCK
10	1	SOLA	SDN 10-24-100P	DC POWER SUPPLY, 24 VDC, 10A
11	2	DELTA-V		BULK POWER SUPPLY DIN RAIL MOUNT, AC TO DC 24
12	2	HARDY	HI 4050	DIGITAL WEIGHT CONTROLLER
13	1	AB	2711-B5A10	PANELVIEW 550, WITH KEYPAD AND TOUCHSCREEN
14	2	AB	1485A-C2	TERMINATING RESISTOR
15	11	AB	1492-FB1C30-L	AB, FUSEHOLDER 30A, 1 POLE
16	1	HARDY	4000-DIS	HARDY, WAVESAVER WEIGHT CONTROLLER DISPLAY/KEYBOARD FOR HI 4050
17	1	DELTA-V	VE4017PO	SIMPLEX H1 FOUNDATION FIELDBUS I/O INTERFACE CARD AND TERMINAL BLOCK
18	1	DELTA-V	VE4005S2B1	ANALOG OUTPUT CARD: 8 CHANNEL, 4-20 mA, W/STD. TERMINATION BLOCK
19	1	PEPPERL-FUCHS	PS3500-PM-1.24.15	BULK POWER SUPPLY W/POWER SUPPLY BACKPLANE PS3500-TB-3-N-1
20	1	COOPER	FPS-1	REDUNDANT FIELDBUS POWER SYSTEM
21	2	COOPER	FPS-1PM	POWER MODULE

THIS DCN
HOLD

Savannah River Site

Supplier Document Status

- [x] 1. Work May Proceed
- [ ] 2. Submit Final Document-Work May Proceed
- [ ] 3. Revise and Resubmit Work- May Proceed Subject to Resolution of Indicated Comments
- [ ] 4. Revise and Resubmit-Work May Not Proceed
- [ ] 5. Permission to Proceed Not Required

PKG. # 25705

Permission to proceed does not constitute acceptance or approval of design details, calculations, test methods, analysis or materials developed or selected by the supplier, and does not relieve supplier from full compliance with contractural obligations or release of any "holds" placed on the contract.

AC52406A-010-A-NT2

Document Catagory: 1.1

Date: 1/30/2007

Reviewer: M. SINGH

DO NOT INCORPORATE HOLDS. DESIGN COMPLETE WITH THE EXCEPTION OF DESIGN FROM PROCUREMENTS.

REV	DATE	REVISION NOTE	BY
4	-		
3	-		
2	-		
1	-		
0	-		

TITLE: BILL OF MATERIAL

U.S. DEPARTMENT OF ENERGY
SAVANNAH RIVER SITE

DRAWN BY: BR | DATE: 1/3/07
APP'D BY: | SCALE:

CATALOG NO.

NOL-TEC SYSTEMS, INC.
MATERIAL CONVEYING AND CONTROL SPECIALISTS
LINO LAKES, MN

© 1998, UNPUBLISHED

DRAWING NO. 10879-5 | SHT 01 OF 01

AFTER Design Change Notice (Continued) DCN

DCP No. M-DCP-7-11003 | Revision 0 | Document No. AC52406A-010-A-NT2 | Revision 0
DCN No. 000001 | Project No. N/A | Page 3 of 3

Design Change Notice (DCN)

DCP Number	Revision	
M-DCP-Z-11003	1	
DCN No. M-DCP-Z-11003-J-00004	**Revision** 1	**Project/Task No** N/A

Design Change Notice (DCN)

Classification Reviewer: N/A

Date: 05/21/2019

Design Change Notice (DCN)

DCP Number	Revision	
M-DCP-Z-11003	1	
DCN No.	**Revision**	**Project/Task No**
M-DCP-Z-11003-J-00004	1	N/A

Document No. (Doc Rev)
J-L6-Z-0001;3

Reason for Change (Be specific)
Provide Upgrade information for Weigh Hopper

Description of Change
REVISE COMMUNICATION DIAGRAM

Engineering Approvals

Originator	Date	Responsible Engineer Manager	Date
WALKER, DENNIS E.	05/20/2019	SUD, RAJENDRA J.	05/21/2019

Verifier/Checker	Date	Discipline
HEVEL, STEPHEN D.	05/21/2019	J-INSTRUMENTATION AND CONTROLS

Verification Method(s)
Design Check (GS/PS only)

N/A

SHP DRAWING NO.

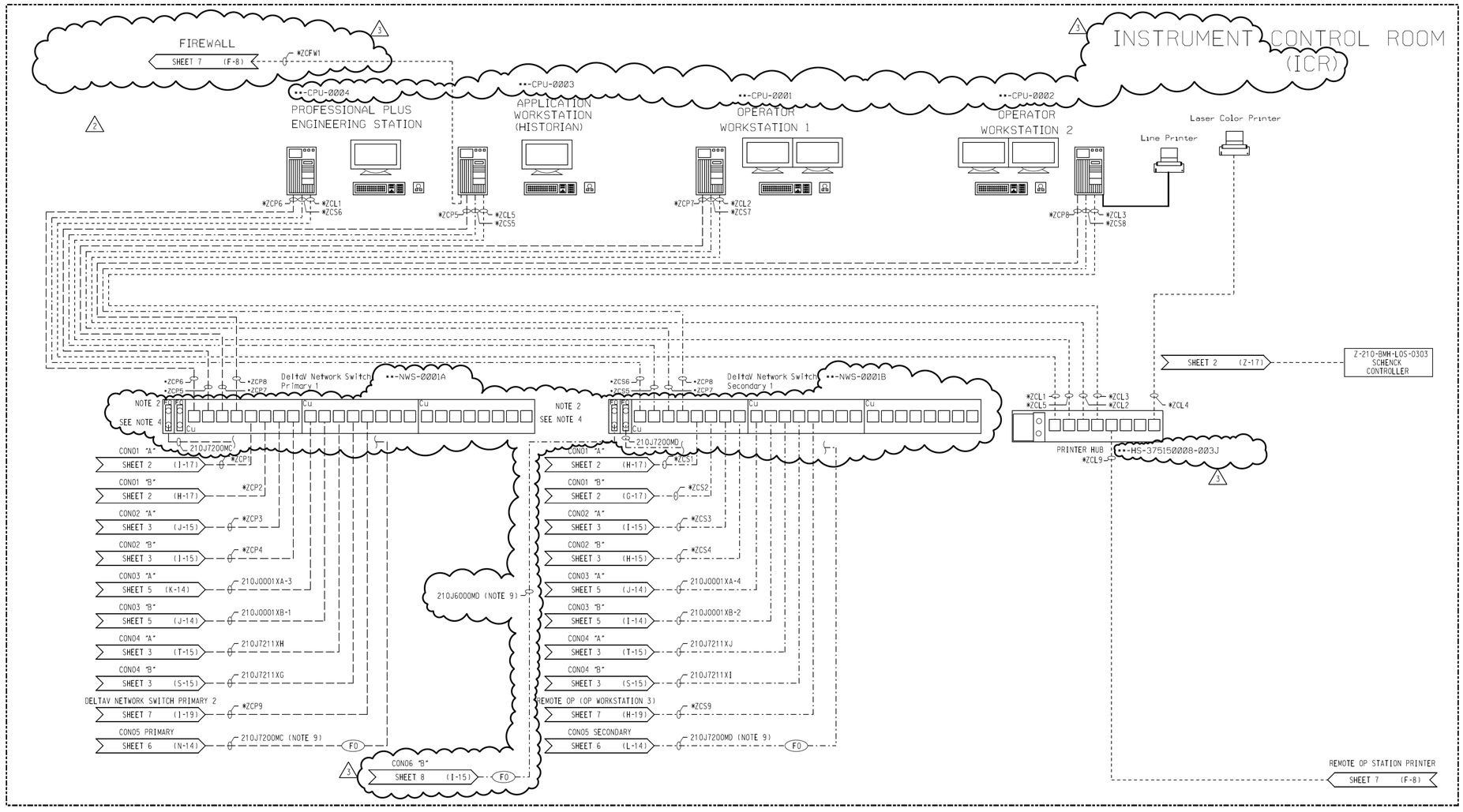

NOTES

1. CABLE NUMBERS BEGINNING "*" ARE PREFIXED BY "Z-210000-PCM-ECNP-JL6Z0001".
2. PORT ASSIGNMENTS ARE SHOWN AS A "TYPICAL" ARRANGEMENT AND ARE NOT NECESSARILY CONNECTED TO THE PORT SHOWN.
3. DELETED.
4. CONTROL ROOM DELTAV NETWORK SWITCHES ARE 24-PORT SMART SWITCHES.
5. DELETED.
6. REFER TO DRAWING J-JQ-Z-00015 AND J-JC-Z-0003 FOR DETAILS.
7. NOT USED AT THIS TIME.
8. NOT USED AT THIS TIME.
9. CABLE NUMBERS ARE THE FIBER JUMPERS AT DEVICES. SEE FIBER OPTIC MAP (E-EB-Z-00012) FOR ADDITIONAL CABLE NUMBERING INFORMATION OF COMPLETE SIGNAL PATH.
10. CABLE NUMBERS BEGINNING "W" ARE PREFIXED BY "Z-451000-PCM-ECNP-JL6Z0001".
11. ICR ROOM DELTAV NETWORK SWITCH IS AN 8-PORT COPPER, 8-PORT MM FIBER OPTIC, 8-PORT EXPANDABLE (FUTURE). 10/100BASE.
12. CABLE NUMBERS BEGINNING "X" ARE PREFIXED BY "Z-210000-DCS-ECNP-JJ5Z00024".
13. EQUIPMENT NUMBERS BEGINNING WITH "**" ARE PREFIXED BY "Z-210000-DCS".
14. REMOTE OPERATOR WORKSTATION RACK INCLUDES A KEYBOARD WHICH CURRENTLY IS NOT BEING USED.
15. JUMPER NUMBERS BEGINNING WITH "**" ARE UNSCHEDULED AND NOT LISTED IN PDMS.

LEGEND

- POWER
- I/O Bus
- FO — FIBER OPTIC CABLE (62.5um MULTIMODE)
- Modbus Cable
- CONTROL NETWORK "A"
- CONTROL NETWORK "B"
- LOCAL NETWORK

DELTAV CARD SYMBOLOGY

VIM=VIRTUAL I/O MODULE
PS=POWER SUPPLY
MC=MD CONTROLLER
MD=MD CONTROLLER
DI=DIGITAL INPUT
DO=DIGITAL OUTPUT
AI=ANALOG INPUT
AO=ANALOG OUTPUT
HI=HI FOUNDATION FIELDBUS
AS=AS-I (ACTUATOR SENSOR INTERFACE)

SPARE CARD SLOT

"TO"
SHEET X (X-X)

"FROM"
SHEET X (X-X)

ADDITIONAL REFERENCE DRAWINGS

W768571	CONSOLE ARRANGEMENT
W774008	ONE LINE
W774051	PANEL SCHEDULE UPS PANEL Y146
E-E4-Z-0022	POWER DISTRB DIAG I/O CAB 1
E-E4-Z-0023	POWER DISTRB DIAG I/O CAB 2
E-E4-Z-0025	POWER DISTRB DIAG I/O CAB 3
E-E4-Z-0026	POWER DISTRB DIAG I/O CAB 4
J-JC-Z-0001	PANEL LAYOUT I/O CAB 1
J-JC-Z-0002	PANEL LAYOUT I/O CAB 2
J-JC-Z-0003	PANEL LAYOUT I/O CAB 3
J-JC-Z-0004	PANEL LAYOUT I/O CAB 4A
J-JC-Z-0005	PANEL LAYOUT I/O CAB 4B
J-JQ-Z-0001	PANEL I/O WIRING I/O CAB 1
J-JQ-Z-0002	PANEL I/O WIRING I/O CAB 2
J-JQ-Z-0003	PANEL I/O WIRING I/O CAB 3
J-JQ-Z-0004	PANEL I/O WIRING I/O CAB 4A & 4B
J-JQ-Z-0013	PLC NETWORK COMM. - TRAIN A
J-JQ-Z-0014	PLC NETWORK COMM. - TRAIN B
J-JQ-Z-0015	PLC TO DCS COMM.

J L6 Z 0001 — LATEST REVISION 3

PROJ.	REV. NO.	DATE	REVISION	PRP'D	LEAD ENG	CHK'D	APRV'D	APRV'D	APRV'D
N/A	3		INCORPORATED J-DCF-Z-00720, J-DCP-Z-12006 (REF. DCN J-00002). J-DCF-Z-00643, AND E-DCF-Z-00355.	APPROVALS MAINTAINED IN DCR/EDWS					
W899	A	02/26/03	INTERIM DOCUMENT FOR J-DCP-Z-02002	SIGNATURES ON MICROFILM					
W899	0	04/30/03	INCORP. AS-BUILT (REF. J-DCP-Z-02002)	SIGNATURES ON MICROFILM					
N/A	1	05/11/10	INCORPORATED J-DCF-Z-00352, J-DCP-Z-05003 (REF DCN J001), J-DCF-Z-00398, J-DCP-Z-06005 (REF DCN J022), AND J-DCP-Z-07002 (REF DCN J032).	APPROVALS MAINTAINED IN DCR/EDWS/MICROFILM					
Y544	2	07/21/15	INCORPORATED J-DCF-Z-00624, J-DCP-Z-10001 (REF. DCN J-00003), J-DCP-Z-12005 (REF. DCN J-00001), M-DCP-Z-10002 (REF. DCN J-00007), M-DCP-Z-10003 (REF. DCN J-00006), AND M-DCP-Z-10011 (REF. DCN J-00011).	APPROVALS MAINTAINED IN DCR/EDWS					

W.S. # 1 1 REF FILES YES NO

LEVELS 1111111111222222222333333333444444444555555555666666 1234567890123456789012345678901234567890123456789012345678901234567890123

PSC- DRAWN BY (ORIG): LAST CADD REV. BY: R.A. KING
PLOT DATE 05/11/10 TIME 1030 DATE: 10/30/17

Scale shown on this drawing is only applicable when plotted at 30"x42" (actual drawing size)

THIS DRAWING HAS BEEN FURNISHED BY THE SAVANNAH RIVER SITE. THE INFORMATION AND KNOW HOW THEREON MAY NOT BE USED NOR THE DRAWING REPRODUCED WITHOUT WRITTEN PERMISSION OF THE PRIME CONTRACTOR. ALL REPRODUCTIONS IN WHOLE OR IN PART, INCLUDING VENDOR'S SHOP DRAWINGS, SHALL BEAR OR REFER TO THIS STAMP.

REFERENCE DRAWINGS

EEBZ00012	SALTSTONE FIBER OPTIC CONNECTION
SHRAD15424-2	SDU 3/5 DELTAV CABINET
JJ5Z00024	SALTSTONE DELTAV WIRELESS
JJLZ00061	ICR ROOM - DCS EQIPMENT RACK

REFERENCE STANDARDS

UNITED STATES DEPARTMENT OF ENERGY

SAVANNAH RIVER SITE

BLDG. NO. 210Z | SITE CLEARANCE NO. N/A | DESIGN AREA NO. N/A | DESIGN GROUP N/A

TITLE

SALTSTONE FACILITY DELTA V CONTROL SYSTEM ARCHITECTURE

(U)

SCALE NTS | SHP DRAWING NO. N/A | SHEET NO. 1 OF 8 | LATEST REVISION 3

BEFORE

Design Change Notice (DCN) Continuation Page

DCP No. M-DCP-Z-11003	Revision 1	Document No. J-L6-Z-0001	Revision 3
DCN No. M-DCP-Z-11003-J-00004	Revision 1	Project/Task No. N/A	Page 3 of 6

N/A

SHP DRAWING NO.

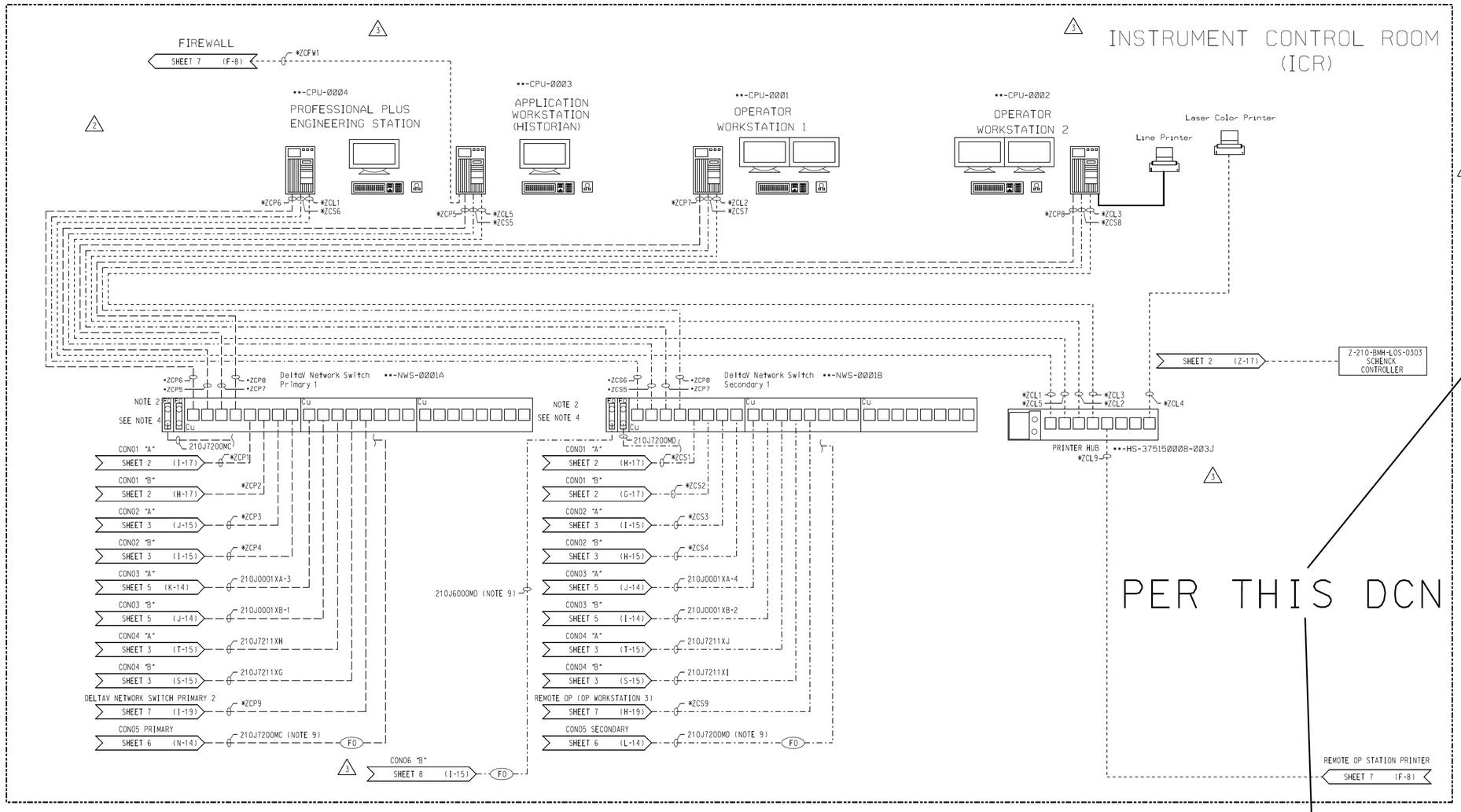

NOTES

1. CABLE NUMBERS BEGINNING "*" ARE PREFIXED BY "Z-210000-PCM-ECNP-JL6Z0001".
2. PORT ASSIGNMENTS ARE SHOWN AS A "TYPICAL" ARRANGEMENT AND ARE NOT NECESSARILY CONNECTED TO THE PORT SHOWN.
3. DELETED.
4. CONTROL ROOM DELTAV NETWORK SWITCHES ARE 24-PORT SMART SWITCHES.
5. DELETED.
6. REFER TO DRAWING J-JQ-Z-00015 AND J-JC-Z-0003 FOR DETAILS.
7. NOT USED AT THIS TIME.
8. NOT USED AT THIS TIME.
9. CABLE NUMBERS ARE THE FIBER JUMPERS AT DEVICES. SEE FIBER OPTIC MAP (E-EB-Z-00012) FOR ADDITIONAL CABLE NUMBERING INFORMATION OF COMPLETE SIGNAL PATH.
10. CABLE NUMBERS BEGINNING "W" ARE PREFIXED BY "Z-451005-PCM-ECNP-JL6Z0001".
11. ICR ROOM DELTAV NETWORK SWITCH IS AN 8-PORT COPPER, 8-PORT MM FIBER OPTIC, 8-PORT EXPANDABLE (FUTURE). 10/100BASE.
12. CABLE NUMBERS BEGINNING "Z" ARE PREFIXED BY "Z-210000-DCS-ECNP-JJ5Z00024".
13. EQUIPMENT NUMBERS BEGINNING WITH "**" ARE PREFIXED BY "Z-210000-DCS".
14. REMOTE OPERATOR WORKSTATION RACK INCLUDES A KEYBOARD WHICH CURRENTLY IS NOT BEING USED.
15. JUMPER NUMBERS BEGINNING WITH "**" ARE UNSCHEDULED AND NOT LISTED IN PDMS.
16. FOR LOS-302 INTERNAL WIRING SEE VENDOR FILE AC52406A.

LEGEND

POWER
I/O Bus
FO — FIBER OPTIC CABLE (62.5um MULTIMODE)
Modbus Cable
CONTROL NETWORK "A"
CONTROL NETWORK "B"
LOCAL NETWORK

DELTAV CARD SYMBOLOGY

VIM=VIRTUAL I/O MODULE
PS=POWER SUPPLY
MC=MC CONTROLLER
MQ=MQ CONTROLLER
DI=DIGITAL INPUT
DO=DIGITAL OUTPUT
AI=ANALOG INPUT
AO=ANALOG OUTPUT
HI=HI FOUNDATION FIELDBUS
AS=AS-I (ACTUATOR SENSOR INTERFACE)

SPARE CARD SLOT

"TO" SHEET X (X-X)
"FROM" SHEET X (X-X)

ADDITIONAL REFERENCE DRAWINGS	
W768571	CONSOLE ARRANGEMENT
W774008	ONE LINE
W774051	PANEL SCHEDULE UPS PANEL Y146
E-E4-Z-0022	POWER DISTRB DIAG I/O CAB 1
E-E4-Z-0023	POWER DISTRB DIAG I/O CAB 2
E-E4-Z-0025	POWER DISTRB DIAG I/O CAB 3
E-E4-Z-0026	POWER DISTRB DIAG I/O CAB 4
J-JC-Z-0001	PANEL LAYOUT I/O CAB 1
J-JC-Z-0002	PANEL LAYOUT I/O CAB 2
J-JC-Z-0003	PANEL LAYOUT I/O CAB 3
J-JC-Z-0004	PANEL LAYOUT I/O CAB 4A
J-JC-Z-0005	PANEL LAYOUT I/O CAB 4B
J-JQ-Z-0001	PANEL I/O WIRING I/O CAB 1
J-JQ-Z-0002	PANEL I/O WIRING I/O CAB 2
J-JQ-Z-0003	PANEL I/O WIRING I/O CAB 3
J-JQ-Z-0004	PANEL I/O WIRING I/O CAB 4A & 4B
J-JQ-Z-0013	PLC NETWORK COMM. - TRAIN A
J-JQ-Z-0014	PLC NETWORK COMM. - TRAIN B
J-JQ-Z-0015	PLC TO DCS COMM.

J L6 Z 0001 — LATEST REVISION 3

PROJ.	REV. NO.	DATE	REVISION	PRP'D	LEAD ENG	CHK'D	APRV'D	APRV'D	APRV'D
N/A	3		INCORPORATED J-DCF-Z-00720, J-DCP-Z-12006 (REF. DCN J-00002). J-DCF-Z-00643, AND E-DCF-Z-00355.	APPROVALS MAINTAINED IN DCR/EDWS					
W899	A	02/26/03	INTERIM DOCUMENT FOR J-DCP-Z-02002	SIGNATURES ON MICROFILM					
W899	0	04/30/03	INCORP. AS-BUILT (REF. J-DCP-Z-02002)	SIGNATURES ON MICROFILM					
N/A	1	05/11/10	INCORPORATED J-DCF-Z-00352, J-DCP-Z-05003 (REF DCN J001), J-DCF-Z-00398, J-DCP-Z-06005 (REF DCN J022), AND J-DCP-Z-07002 (REF DCN J032).	APPROVALS MAINTAINED IN DCR/EDWS/MICROFILM					
Y544	2	07/21/15	INCORPORATED J-DCF-Z-00624, J-DCP-Z-10001 (REF. DCN J-00003), J-DCP-Z-12005 (REF. DCN J-00001), M-DCP-Z-10002 (REF. DCN J-00007), M-DCP-Z-10003 (REF. DCN J-00006), AND M-DCP-Z-10011 (REF. DCN J-00011).	APPROVALS MAINTAINED IN DCR/EDWS					

W.S. # 1 1 REF FILES YES NO

LEVELS 1111111111222222222333333333444444444555555555666666 1234567890123456789012345678901234567890123456789012345678901234

PSC= DRAWN BY (ORIG): PLOT DATE 05/11/10 TIME 1030

THIS DRAWING HAS BEEN FURNISHED BY THE SAVANNAH RIVER SITE. THE INFORMATION AND KNOW HOW THEREON MAY NOT BE USED NOR THE DRAWING REPRODUCED WITHOUT WRITTEN PERMISSION OF THE PRIME CONTRACTOR. ALL REPRODUCTIONS, IN WHOLE OR IN PART, INCLUDING VENDOR'S SHOP DRAWINGS, SHALL BEAR OR REFER TO THIS STAMP.

REFERENCE DRAWINGS	
EEBZ00012	SALTSTONE FIBER OPTIC CONNECTION
SHRA015424	2 SDU 3/5 DELTAV CABINET
JJ5Z00024	SALTSTONE DELTAV WIRELESS
JJ1Z00061	ICR ROOM - DCS EQIPMENT RACK
W774008	UPS POWER SUPPLY

REFERENCE STANDARDS

UNITED STATES DEPARTMENT OF ENERGY
SAVANNAH RIVER SITE

BLDG. NO. 210Z | SITE CLEARANCE NO. N/A | DESIGN AREA NO. N/A | DESIGN GROUP N/A

TITLE
SALTSTONE FACILITY
DELTA V
CONTROL SYSTEM
ARCHITECTURE

(U)

SCALE NTS | SHP DRAWING NO. N/A | SHEET NO. 1 OF 8 | LATEST REVISION 3

LAST CADD REV. BY: R.A. KING DATE: 10/30/17

Scale shown on this drawing is only applicable when plotted at 30"x42" (actual drawing size)

Design Change Notice (DCN) Continuation Page

AFTER

DCP No. M-DCP-Z-11003	Revision 1	Document No. J-L6-Z-0001	Revision 3
DCN No. M-DCP-Z-11003-J-00004	Revision 1	Project/Task No. N/A	Page 4 of 6

SRP DRAWING NO. N/A

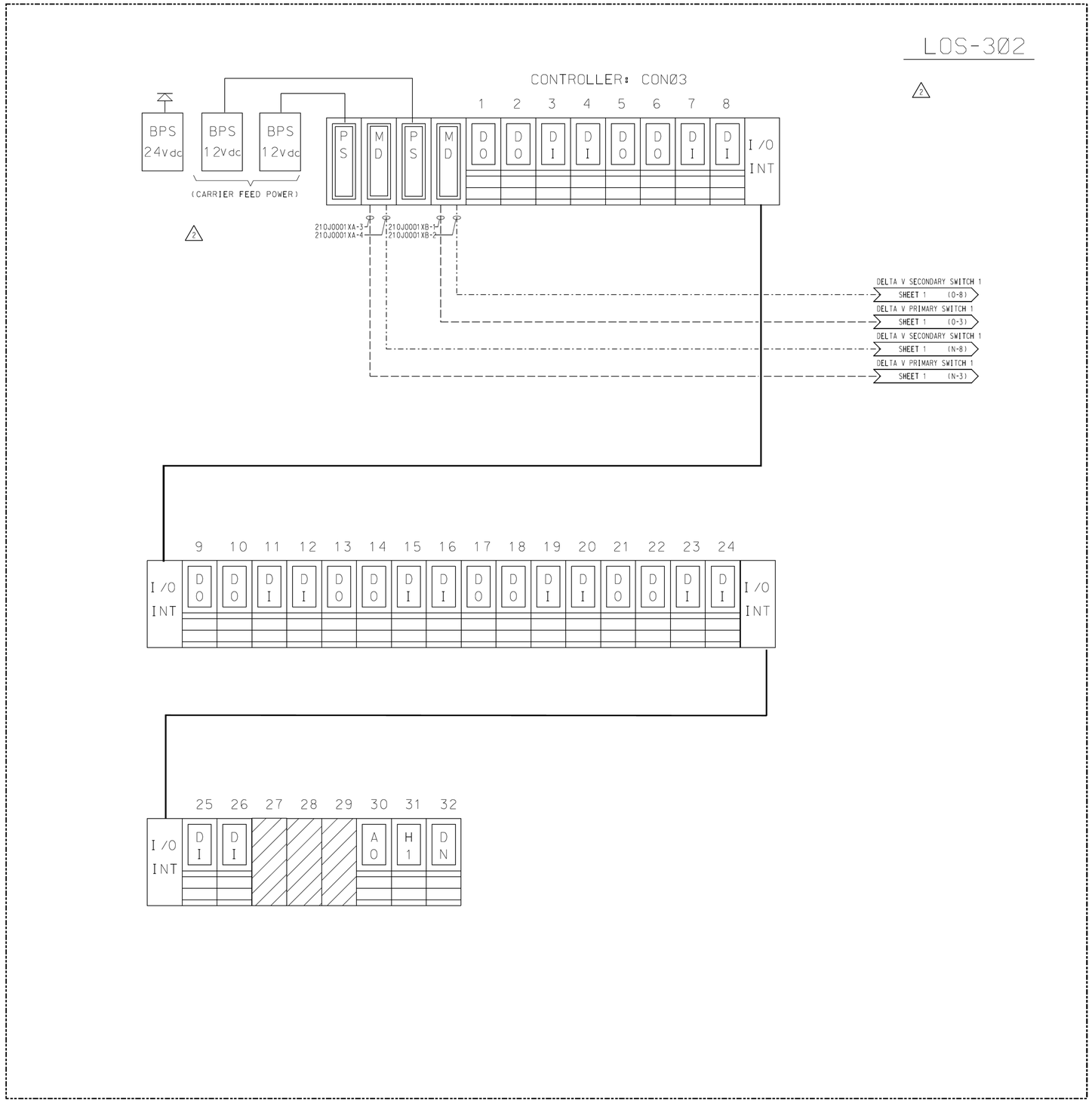

UNITED STATES DEPARTMENT OF ENERGY

SAVANNAH RIVER SITE

THIS DRAWING WAS BEEN FURNISHED BY THE SAVANNAH RIVER SITE. THE INFORMATION AND KNOW HOW THEREON MAY NOT BE USED NOR THE DRAWING REPRODUCED WITHOUT WRITTEN PERMISSION OF THE PRIME CONTRACTOR. ALL REPRODUCTIONS IN WHOLE OR IN PART, INCLUDING VENDOR'S SHOP DRAWINGS, SHALL BEAR OR REFER TO THIS STAMP.

TITLE

SALTSTONE FACILITY
DELTA V
CONTROL SYSTEM
ARCHITECTURE

J L6 Z 0001

SRP DRAWING NO. N/A

SHEET NO. 5 OF 8 | DRAWING REV. 3

W.S. # { } . REF FILES YES NO

LEVELS 1234567890123456789012345678901234567890123456789012345678901234567890123

PSC* PLOT DATE

DRAWN BY (ORIG): TIME

LAST CADD REV. BY: R.A. KING DATE: 10/30/17

Scale shown on this drawing is only applicable when plotted at 30"x42" (actual drawing size)

BEFORE

Design Change Notice (DCN)
Continuation Page

DCP No. M-DCP-Z-11003	Revision 1	Document No. J-L6-Z-0001	Revision 3
DCN No. M-DCP-Z-11003-J-00004	Revision 1	Project/Task No. N/A	Page 5 of 6

SRP DRAWING NO. N/A

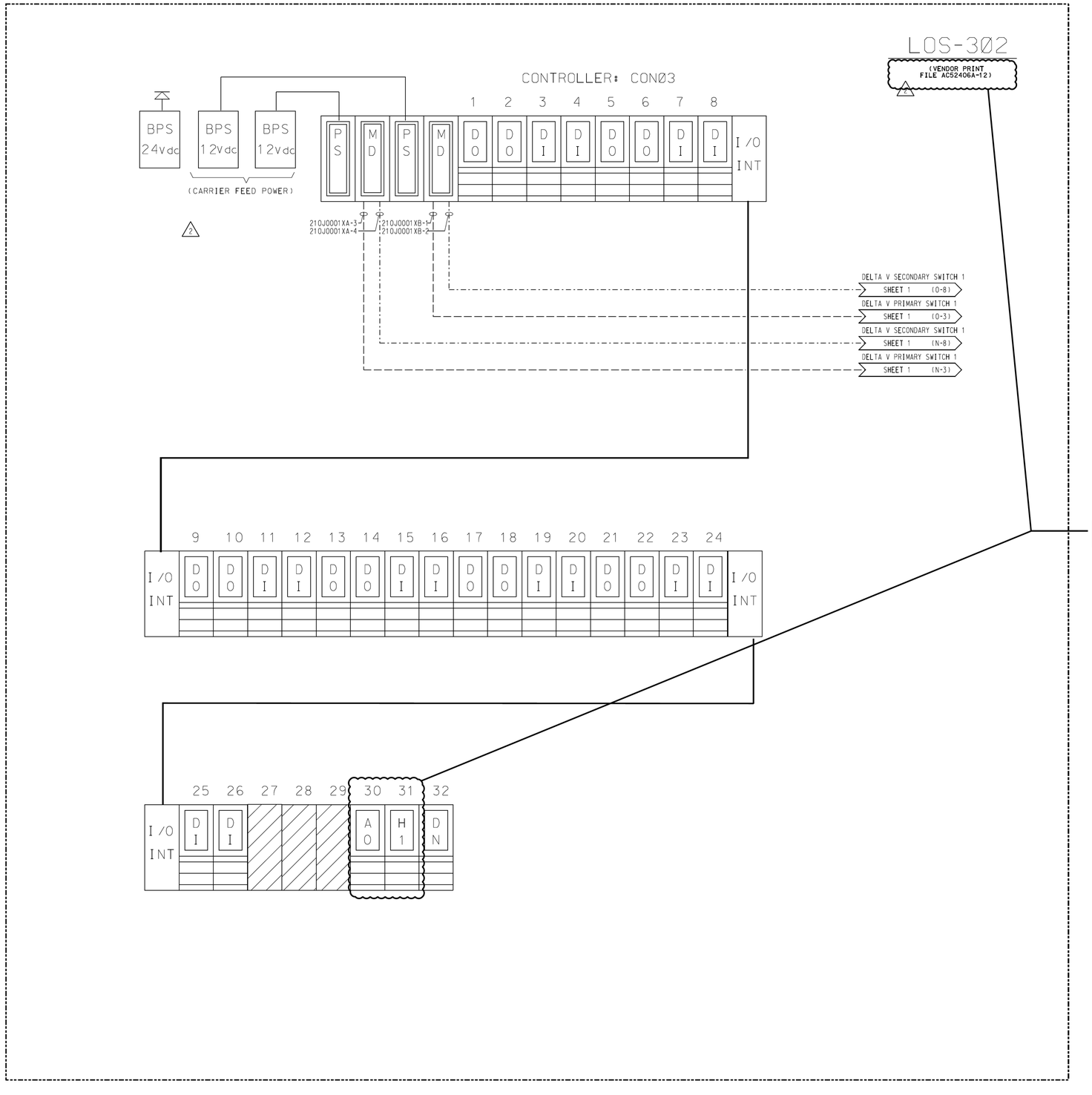

UNITED STATES DEPARTMENT OF ENERGY

SAVANNAH RIVER SITE

THIS DRAWING HAS BEEN FURNISHED BY THE SAVANNAH RIVER SITE. THE INFORMATION AND KNOW HOW THEREON MAY NOT BE USED NOR THE DRAWING REPRODUCED WITHOUT WRITTEN PERMISSION OF THE PRIME CONTRACTOR. ALL REPRODUCTIONS IN WHOLE OR IN PART, INCLUDING VENDOR'S SHOP DRAWINGS, SHALL BEAR OR REFER TO THIS STAMP.

TITLE

SALTSTONE FACILITY
DELTA V
CONTROL SYSTEM
ARCHITECTURE

J L6 Z 0001

SHOP DRAWING NO. N/A

SHEET NO. 3 5 OF 8

DRAWING REV. 3

AFTER

Design Change Notice (DCN)
Continuation Page

DCP No. M-DCP-Z-11003	Revision 1	Document No. J-L6-Z-0001	Revision 3
DCN No. M-DCP-Z-11003-J-00004	Revision 1	Project/Task No. N/A	Page 6 of 6

W.S. # [ ] . REF FILES YES NO

LEVELS 1234567890123456789012345678901234567890123456789012345678901234567890123

PSC* PLOT DATE

DRAWN BY (ORIG): TIME

LAST CADD REV. BY: R.A. KING DATE: 10/30/17

Scale shown on this drawing is only applicable when plotted at 30"x42" (actual drawing size)

Design Change Notice (DCN)

DCP Number	Revision	
M-DCP-Z-11003	1	
DCN No. M-DCP-Z-11003-J-00005	**Revision** 1	**Project/Task No** N/A

Design Change Notice (DCN)

Classification Reviewer: N/A

Date: 05/23/2019

Design Change Notice (DCN)

DCP Number	Revision	
M-DCP-Z-11003	1	
DCN No.	**Revision**	**Project/Task No**
M-DCP-Z-11003-J-00005	1	N/A

Document No. (Doc Rev)
J-DS-Z-00037;5

Reason for Change (Be specific)
TO ADD ISOLATION VALVES TO THE SILO DISCHARGE FEED TO THE BATCH WEIGH HOPPER

Description of Change
PROVIDE I/O LIST FOR FOUNDATION FIELDBUS PROTOCOL

Engineering Approvals

Originator	Date	Responsible Engineer Manager	Date
WALKER, DENNIS E.	05/20/2019	SUD, RAJENDRA J.	05/23/2019

Verifier/Checker	Date	Discipline
HEVEL, STEPHEN D.	05/22/2019	J-INSTRUMENTATION AND CONTROLS

Verification Method(s)
Design Check (GS/PS only)

THIS DRAWING HAS BEEN FURNISHED BY THE SAVANNAH RIVER SITE. THE INFORMATION AND KNOW HOW THEREON MAY NOT BE USED NOR THE DRAWING REPRODUCED WITHOUT WRITTEN PERMISSION OF THE PRIME CONTRACTOR. ALL REPRODUCTIONS IN WHOLE OR IN PART, INCLUDING VENDOR'S SHOP DRAWINGS, SHALL BEAR OR REFER TO THIS STAMP.

I/O DESIGN BASIS

1. CONTROLLER
   The maximum number of active and spare Input/Output points shall be limited to 500 for any controller.

2. ANALOG INPUT POINTS
   - 8 channels per card my be used. The card type is AI_8CH_HART_4-20
   - MA2W is for 2 wire
   - MA4W is for 4 wire.

3. ANALOG OUTPUT POINTS
   - 8 channels per card my be used. The card type is AO_8CH_HART_4-20

4. DIGITAL INPUT POINTS
   - 8 channels per card my be used. The card type is DI_8CH_115VAC-ISO

5. DIGITAL OUTPUT POINTS
   - 8 channels per card my be used. The card type is DO_8CH_115VAC-240VAC-ISO

6. FOUNDATION FIELD BUS
   - Controller: CON01, Card: 23, 24 (Incorporated I/O List J-JD-Z-00043)
   - Controller: CON03, Card: 47

7. Serial
   - Controller 1 Card 48 (J-DCP-Z-05003)

8. DEVICENET
   Controller 3 Card 32 (J-DCP-Z-07002)

NOTES:

ETHERNET (ETH), Pages 3-59
FIELD BUS (FFB), Pages 60-75
STANDARD (STD), Pages 76-147

BEFORE

Design Change Notice (DCN)
Continuation Page

DCP No.	Revision	Document No.	Revision
M-DCP-Z-11003	1	J-DS-Z-00037	5
DCN No. M-DCP-Z-11003-J-00005	Revision 1	Project/Task No. N/A	Page 3 of 14

TITLE

I/O LIST

J DS Z 00037

UNITED STATES DEPARTMENT OF ENERGY
SAVANNAH RIVER SITE

SRP DRAWING NO. J-DS-Z-00037

SHEET NO. 2 OF 147

DRAWING REV. 5

TYPE 1 (8.5 x 11)

Scale shown on this drawing is only applicable when plotted at 8.5"x11" (actual drawing size)

W.S. [SDH] 10-11-10.

THIS DRAWING HAS BEEN FURNISHED BY THE SAVANNAH RIVER SITE. THE INFORMATION AND KNOW HOW THEREON MAY NOT BE USED NOR THE DRAWING REPRODUCED WITHOUT WRITTEN PERMISSION OF THE PRIME CONTRACTOR. ALL REPRODUCTIONS IN WHOLE OR IN PART, INCLUDING VENDOR'S SHOP DRAWINGS, SHALL BEAR OR REFER TO THIS STAMP.

I/O DESIGN BASIS

1. CONTROLLER
   The maximum number of active and spare Input/Output points shall be limited to 500 for any controller.

2. ANALOG INPUT POINTS
   - 8 channels per card my be used. The card type is AI_8CH_HART_4-20
   - MA2W is for 2 wire
   - MA4W is for 4 wire.

3. ANALOG OUTPUT POINTS
   - 8 channels per card my be used. The card type is AO_8CH_HART_4-20

4. DIGITAL INPUT POINTS
   - 8 channels per card my be used. The card type is DI_8CH_115VAC-ISO

5. DIGITAL OUTPUT POINTS
   - 8 channels per card my be used. The card type is DO_8CH_115VAC-240VAC-ISO

6. FOUNDATION FIELD BUS
   - Controller: CON01, Card: 23, 24 (Incorporated I/O List J-JD-Z-00043)
   - Controller: CON02, Card: 47
   - Controller: CON03, Card: 31

THIS DCN

7. Serial
   - Controller 1 Card 48 (J-DCP-Z-05003)

8. DEVICENET
   - Controller 3 Card 32 (J-DCP-Z-07002)

NOTES:

ETHERNET (ETH), Pages 3-59
FIELD BUS (FFB), Pages 60-75
STANDARD (STD), Pages 76-147

AFTER

Design Change Notice (DCN)
Continuation Page

DCP No.	Revision	Document No.	Revision
M-DCP-Z-11003	1	J-DS-Z-00037	5
DCN No. M-DCP-Z-11003-J-00005	Revision 1	Project/Task No. N/A	Page 4 of 14

TITLE I/O LIST 1

J DS Z 00037

UNITED STATES DEPARTMENT OF ENERGY
SAVANNAH RIVER SITE

SRP DRAWING NO. J-DS-Z-00037 | SHEET NO. 1 2 OF 147 | DRAWING REV. 5

TYPE 1 (8.5 x 11) Scale shown on this drawing is only applicable when plotted at 8.5"x11" (actual drawing size) W.S. [SDH] 10-11-10.

FOS: **SS** Controller: **CON01** Card: **41**

Channel Design Area Equipment No. Device Signal Tag	Point Type Instr Type Signal Type Conversion	PID CLD Schematic Loop Diagram	FTC FTC Strip Terminals	Contact Close Contact Open Redundant	Module Description Sig Conv-Mfg/Model#/CSResistor Revision History
04 --- LIT-1231 LIT-1231	AI --- MA4W ---	W754522 NA VP: AC52406A D193700	SS TS4 10 11 12	--- --- -	LI1231/AI1/IO_IN F/A SILO #3 LVL --- / --- / --- TTR#HLW-SSF-2006-0007

FOS: **SS** Controller: **CON03** Card: **02**

Channel Design Area Equipment No. Device Signal Tag	Point Type Instr Type Signal Type Conversion	PID CLD Schematic Loop Diagram	FTC FTC Strip Terminals	Contact Close Contact Open Redundant	Module Description Sig Conv-Mfg/Model#/CSResistor Revision History
01 --- SV-1283 SV-1283	DO --- 120V ---	W754524 NA VP: AC52406A ---	SS TB1 74 51 ---	OPEN --- -	--- SILO #1 WEIGH HOPPER INLET --- / --- / --- J-DCP-Z-07002-J001
02 --- SV-1284 SV-1284	DO --- 120V ---	W754524 NA VP: AC52406A ---	SS TB1 75 65 ---	OPEN --- -	--- SILO #2 WEIGH HOPPER INLET --- / --- / --- J-DCP-Z-07002-J001
03 --- SV-1285 SV-1285	DO --- 120V ---	W754524 NA VP: AC52406A ---	SS TB1 76 82 ---	OPEN --- -	--- SILO #3 WEIGH HOPPER INLET --- / --- / --- J-DCP-Z-07002-J001
04 --- SV-1282 SV-1282	DO --- 120V ---	W754524 NA VP: AC52406A ---	SS TB1 77 41 ---	OPEN --- -	--- SILO #4 WEIGH HOPPER INLET --- / --- / --- J-DCP-Z-07002-J001

FOS: **SS** Controller: **CON03** Card: **04**

Channel Design Area Equipment No. Device Signal Tag	Point Type Instr Type Signal Type Conversion	PID CLD Schematic Loop Diagram	FTC FTC Strip Terminals	Contact Close Contact Open Redundant	Module Description Sig Conv-Mfg/Model#/CSResistor Revision History
01 --- ZS-1283A ZS-1283A	DI --- 120V ---	W754524 NA VP: AC52406A ---	SS TB1 91 52 ---	OPEN --- -	--- SILO #1 WH INLET OPEN ZS --- / --- / --- J-DCP-Z-07002-J001
02 --- ZS-1284A ZS-1284A	DI --- 120V ---	W754524 NA VP: AC52406A ---	SS TB1 92 99 ---	OPEN --- -	--- SILO #2 WH INLET OPEN ZS --- / --- / --- J-DCP-Z-07002-J001
03 --- ZS-1285A ZS-1285A	DI --- 120V ---	W754524 NA VP: AC52406A ---	SS TB1 93 116 ---	OPEN --- -	--- SILO #3 WH INLET OPEN ZS --- / --- / --- J-DCP-Z-07002-J001
04 --- ZS-1282A ZS-1282A	DI --- 120V ---	W754524 NA VP: AC52406A ---	SS TB1 94 42 ---	OPEN --- -	--- SILO #4 WH INLET OPEN ZS --- / --- / --- J-DCP-Z-07002-J001

FOS: **SS** Controller: **CON03** Card: **25**

Channel Design Area Equipment No. Device Signal Tag	Point Type Instr Type Signal Type Conversion	PID CLD Schematic Loop Diagram	FTC FTC Strip Terminals	Contact Close Contact Open Redundant	Module Description Sig Conv-Mfg/Model#/CSResistor Revision History
01 --- ZS-1283B ZS-1283B	DI --- 120V ---	W754524 NA VP: AC52406A ---	SS TB2 115 TB1 ---	--- --- -	--- SILO #1 WH INLET CLOSED ZS --- / --- / --- J-DCP-Z-07002-J001
02 --- ZS-1284B ZS-1284B	DI --- 120V ---	W754524 NA VP: AC52406A ---	SS TB2 116 TB1 ---	--- --- -	--- SILO #2 WH INLET CLOSED ZS --- / --- / --- J-DCP-Z-07002-J001
03 --- ZS-1285B ZS-1285B	DI --- 120V ---	W754524 NA VP: AC52406A ---	SS TB2 117 TB1 ---	--- --- -	--- SILO #3 WH INLET CLOSED ZS --- / --- / --- J-DCP-Z-07002-J001
04 --- ZS-1282B ZS-1282B	DI --- 120V ---	W754524 NA VP: AC52406A ---	SS TB2 118 TB1 ---	--- --- -	--- SILO #4 WH INLET CLOSED ZS --- / --- / --- J-DCP-Z-07002-J001

FOS: **SS** Controller: **CON01** Card: **41**

Channel Design Area Equipment No. Device Signal Tag	Point Type Instr Type Signal Type Conversion	PID CLD Schematic Loop Diagram	FTC FTC Strip Terminals	Contact Close Contact Open Redundant	Module Description Sig Conv-Mfg/Model#/CSResistor Revision History
04 -- SPARE CON01C41CH04	AI -- MA4W ---	--- NA VP: AC52406A ---	SS TS4 10 11 12	--- ---	--- --- --- / --- / --- M-DCP-Z-11003, J-00005

FOS: **SS** Controller: **CON03** Card: **02**

Channel Design Area Equipment No. Device Signal Tag	Point Type Instr Type Signal Type Conversion	PID CLD Schematic Loop Diagram	FTC FTC Strip Terminals	Contact Close Contact Open Redundant	Module Description Sig Conv-Mfg/Model#/CSResistor Revision History
01 -- SPARE CON03C02CH01	DO --- 120V ---	--- NA VP: AC52406A ---	SS TB1 74 51 ---	--- --- -	--- --- --- / --- / --- M-DCP-Z-11003, J-00005
02 -- SPARE CON03C02CH02	DO --- 120V ---	--- NA VP: AC52406A ---	SS TB1 75 65 ---	--- --- -	--- --- --- / --- / --- M-DCP-Z-11003, J-00005
03 -- SPARE CON03C02CH03	DO --- 120V ---	--- NA VP: AC52406A ---	SS TB1 76 82 ---	--- --- -	--- --- --- / --- / --- M-DCP-Z-11003, J-00005
04 -- SPARE CON03C02CH04	DO --- 120V ---	--- NA VP: AC52406A ---	SS TB1 77 41 ---	--- --- -	--- --- --- / --- / --- M-DCP-Z-11003, J-00005

FOS: **SS** Controller: **CON03** Card: **04**

Channel Design Area Equipment No. Device Signal Tag	Point Type Instr Type Signal Type Conversion	PID CLD Schematic Loop Diagram	FTC FTC Strip Terminals	Contact Close Contact Open Redundant	Module Description Sig Conv-Mfg/Model#/CSResistor Revision History
01 -- SPARE CON03C04CH01	DI 120V ---	--- NA VP: AC52406A ---	SS TB1 91 52 --	--- ---	--- --- --- / --- / --- M-DCP-Z-11003, J-00005
02 -- SPARE CON03C04CH02	DI 120V ---	--- NA VP: AC52406A ---	SS TB1 92 99 --	--- ---	--- --- --- / --- / --- M-DCP-Z-11003, J-00005
03 -- SPARE CON03C04CH03	DI 120V ---	--- NA VP: AC52406A ---	SS TB1 93 116 --	--- ---	--- --- --- / --- / --- M-DCP-Z-11003, J-00005
04 -- SPARE CON03C04CH04	DI 120V ---	--- NA VP: AC52406A ---	SS TB1 94 42 --	--- ---	--- --- --- / --- / --- M-DCP-Z-11003, J-00005

This DCN (Typ.)

FOS: **SS** Controller: **CON03** Card: **25**

Channel Design Area Equipment No. Device Signal Tag	Point Type Instr Type Signal Type Conversion	PID CLD Schematic Loop Diagram	FTC FTC Strip Terminals	Contact Close Contact Open Redundant	Module Description Sig Conv-Mfg/Model#/CSResistor Revision History
01 SPARE CON03C25CH01	DI 120V ---	--- NA VP: AC52406A ---	SS TB2 115 TB1 --	--- --- -	--- --- --- / --- / --- M-DCP-Z-11003, J-00005
02 SPARE CON03C25CH02	DI 120V ---	--- NA VP: AC52406A ---	SS TB2 116 TB1 --	--- --- -	--- --- --- / --- / --- M-DCP-Z-11003, J-00005
03 SPARE CON03C25CH03	DI 120V ---	--- NA VP: AC52406A ---	SS TB2 117 TB1 --	--- --- -	--- --- --- / --- / --- M-DCP-Z-11003, J-00005
04 SPARE CON03C25CH04	DI 120V ---	--- NA VP: AC52406A ---	SS TB2 118 TB1 --	--- --- -	--- --- --- / --- / --- M-DCP-Z-11003, J-00005

This DCN (Typ.)

FOS: **SS** Controller: **CON03** Card: **30**

Channel Design Area Equipment No. Device Signal Tag	Point Type Instr Type Signal Type Conversion	PID CLD Schematic Loop Diagram	FTC FTC Strip Terminals	Contact Close Contact Open Redundant	Module Description Sig Conv-Mfg/Model#/CSResistor Revision History
01 --- ZI-1282 ZI-1282	AO --- ---	W754524 NA VP: AC52406A J-J4-Z-00114	SS TB2 161 163 ---	--- ---	HIC1282 SILO 4 - VALVE POSITION --- / --- / M-DCP-Z-11003, J-00005
02 --- ZI-1283 ZI-1283	AO --- ---	W754524 NA VP: AC52406A J-J4-Z-00114	SS TB2 165 167 ---	--- ---	HIC1283 SILO 1 - VALVE POSITION --- / --- / M-DCP-Z-11003, J-00005
03 --- ZI-1284 ZI-1284	AO --- ---	W754524 NA VP: AC52406A J-J4-Z-00114	SS TB2 169 171 ---	--- ---	HIC1284 SILO 2 - VALVE POSITION --- / --- / M-DCP-Z-11003, J-00005
04 --- ZI-1285 ZI-1285	AO --- ---	W754524 NA VP: AC52406A J-J4-Z-00114	SS TB2 173 175 ---	--- ---	HIC1285 SILO 3 - VALVE POSITION --- / --- / M-DCP-Z-11003, J-00005

FOS: **SS** Controller: **CON03** Card: **31** Device Description: **SILO 3 LEVEL**

FB Port: **1** FieldBus Device: **UT-1231** Type: **FieldBus H1 card, 2 Ports**

Manf: **Rosemount Inc.** Device Type: **848 Fieldbus Temperature Device** Rev. **7**

Design Area Equipment Number Device Signal Tag	Point Type Conversion	PID CLD Schematic/S-Line Loop/Segment	FTC Bay FTC Strip Terminals Brick ID	Contace Close Contact Open	Module Channel Description FB Channel / Signal Number / Signal Range Revision History
NA LIT-1231 LIT-1231	AI NA	W754522 NA VP: AC47575A J-J8-Z-00032	SS --- --- --- --- UY-1231	--- ---	LI1231 SILO #3 LEVEL 1 / NA / NA M-DCP-Z-11003, J-00005

FOS: **SS** Controller: **CON03** Card: **31** Device Description: **SILO 4 WEIGH HOPPER INLET VALVE**

FB Port: **1** FieldBus Device: **WCV-1282** Type: **FieldBus H1 card, 2 Ports**

Manf: **FISHER CONTROLS** Device Type: **FISHER DVC6000F - SC - rev 1** Rev. **1**

Design Area Equipment Number Device Signal Tag	Point Type Conversion	PID CLD Schematic/S-Line Loop/Segment	FTC Bay FTC Strip Terminals Brick ID	Contace Close Contact Open	Module Channel Description FB Channel / Signal Number / Signal Range Revision History
NA ZT-1282 ZT-1282	AI NA	W754524 NA VP: AC52406A J-J8-Z-00032	SS --- --- --- --- UY-1282	--- ---	HIC1282 SILO 4 TO BATCH WEIGH HOPPER VLV POS 1 / NA / NA M-DCP-Z-11003, J-00005
NA WCV-1282 WCV-1282	AO NA	W754524 NA VP: AC52406A J-J8-Z-00032	SS --- --- --- --- UY-1282	--- ---	HIC1282 SILO 4 TO BATCH WEIGH HOPPER 2 / NA / NA M-DCP-Z-11003, J-00005

FOS: **SS** Controller: **CON03** Card: **31** Device Description: **SILO 1 WEIGH HOPPER INLET VALVE**

FB Port: **1** FieldBus Device: **WCV-1283** Type: **FieldBus H1 card, 2 Ports**

Manf: **FISHER CONTROLS** Device Type: **FISHER DVC6000F - SC - rev 1** Rev. **1**

Design Area Equipment Number Device Signal Tag	Point Type Conversion	PID CLD Schematic/S-Line Loop/Segment	FTC Bay FTC Strip Terminals Brick ID	Contace Close Contact Open	Module Channel Description FB Channel / Signal Number / Signal Range Revision History
NA ZT-1283 ZT-1283	AI NA	W754524 NA VP: AC52406A J-J8-Z-00032	SS --- --- --- --- UY-1282	--- ---	HIC1283 SILO 1 TO BATCH WEIGH HOPPER VLV POS 1 / NA / NA M-DCP-Z-11003, J-00005
NA WCV-1283 WCV-1283	AO NA	W754524 NA VP: AC52406A J-J8-Z-00032	SS --- --- --- --- UY-1282	--- ---	HIC1283 SILO 1 TO BATCH WEIGH HOPPER 2 / NA / NA M-DCP-Z-11003, J-00005

FOS: **SS** Controller: **CON03** Card: **31** Device Description: **SILO 2 WEIGH HOPPER INLET VALVE**

FB Port: **1** FieldBus Device: **WCV-1284** Type: **FieldBus H1 card, 2 Ports**

Manf: **FISHER CONTROLS** Device Type: **FISHER DVC6000F - SC - rev 1** Rev. **1**

Design Area Equipment Number Device Signal Tag	Point Type Conversion	PID CLD Schematic/S-Line Loop/Segment	FTC Bay FTC Strip Terminals Brick ID	Contace Close Contact Open	Module Channel Description FB Channel / Signal Number / Signal Range Revision History
NA ZT-1284 ZT-1284	AI NA	W754524 NA VP: AC52406A J-J8-Z-00032	SS --- --- --- --- UY-1282	--- ---	HIC1284 SILO 2 TO BATCH WEIGH HOPPER VLV POS 1 / NA / NA M-DCP-Z-11003, J-00005
NA WCV-1284 WCV-1284	AO NA	W754524 NA VP: AC52406A J-J8-Z-00032	SS --- --- --- --- UY-1282	--- ---	HIC1284 SILO 2 TO BATCH WEIGH HOPPER 2 / NA / NA M-DCP-Z-11003, J-00005

FOS: **SS** Controller: **CON03** Card: **31** Device Description: **SILO 3 WEIGH HOPPER INLET VALVE**

FB Port: **1** FieldBus Device: **WCV-1285** Type: **FieldBus H1 card, 2 Ports**

Manf: **FISHER CONTROLS** Device Type: **FISHER DVC6000F - SC - rev 1** Rev. **1**

Design Area Equipment Number Device Signal Tag	Point Type Conversion	PID CLD Schematic/S-Line Loop/Segment	FTC Bay FTC Strip Terminals Brick ID	Contace Close Contact Open	Module Channel Description FB Channel / Signal Number / Signal Range Revision History
NA ZT-1285 ZT-1285	AI NA	W754524 NA VP: AC52406A J-J8-Z-00032	SS --- --- --- --- UY-1282	--- ---	HIC1285 SILO 3 TO BATCH WEIGH HOPPER VLV POS 1 / NA / NA M-DCP-Z-11003, J-00005
NA WCV-1285 WCV-1285	AO NA	W754524 NA VP: AC52406A J-J8-Z-00032	SS --- --- --- --- UY-1282	--- ---	HIC1285 SILO 3 TO BATCH WEIGH HOPPER 2 / NA / NA M-DCP-Z-11003, J-00005

Design Change Notice (DCN)

DCP Number	Revision	
M-DCP-Z-11003	1	
DCN No. M-DCP-Z-11003-J-00007	**Revision** 1	**Project/Task No** N/A

Design Change Notice (DCN)

Classification Reviewer: N/A

Date: 05/21/2019

Design Change Notice (DCN)

DCP Number	Revision	
M-DCP-Z-11003	1	
DCN No.	**Revision**	**Project/Task No**
M-DCP-Z-11003-J-00007	1	N/A

Document No. (Doc Rev)
AC52406A-8;DE1

Reason for Change (Be specific)
Provide Upgrade information for Weigh Hopper

Description of Change
Modify Noltec control cabinet wiring.

Engineering Approvals

Originator	Date	Responsible Engineer Manager	Date
WALKER, DENNIS E.	05/20/2019	SUD, RAJENDRA J.	05/21/2019

Verifier/Checker	Date	Discipline
HEVEL, STEPHEN D.	05/21/2019	J-INSTRUMENTATION AND CONTROLS

Verification Method(s)
Design Check (GS/PS only)

NOTES:
1. ALL INTERNAL JUMPERS TO BE 12AWG SIS WIRE OR EQUAL.
2. D/C (DUST COLLECTOR FILTER) BLDG ROOM SP.
3. BLENDER #1 BLENDING VALVES SV-2010 & SV-2500.
4. BLENDER #2 BLENDING VALVES SV-2110 & SV-2501.
5. FIELD TO ONLY RELABEL AND TERMINATE CABLES AT I/O CARD. TERMINATIONS AT TB1 AND TB2 TO INTERNAL CABINET COMPONENTS DO NOT REQUIRE REMOVAL UNLESS OTHERWISE NOTED.
6. FIELD TO REMOVE 12VDC AND 5VDC POWER SUPPLY WIRING FROM TERMINAL BOX (TB1).

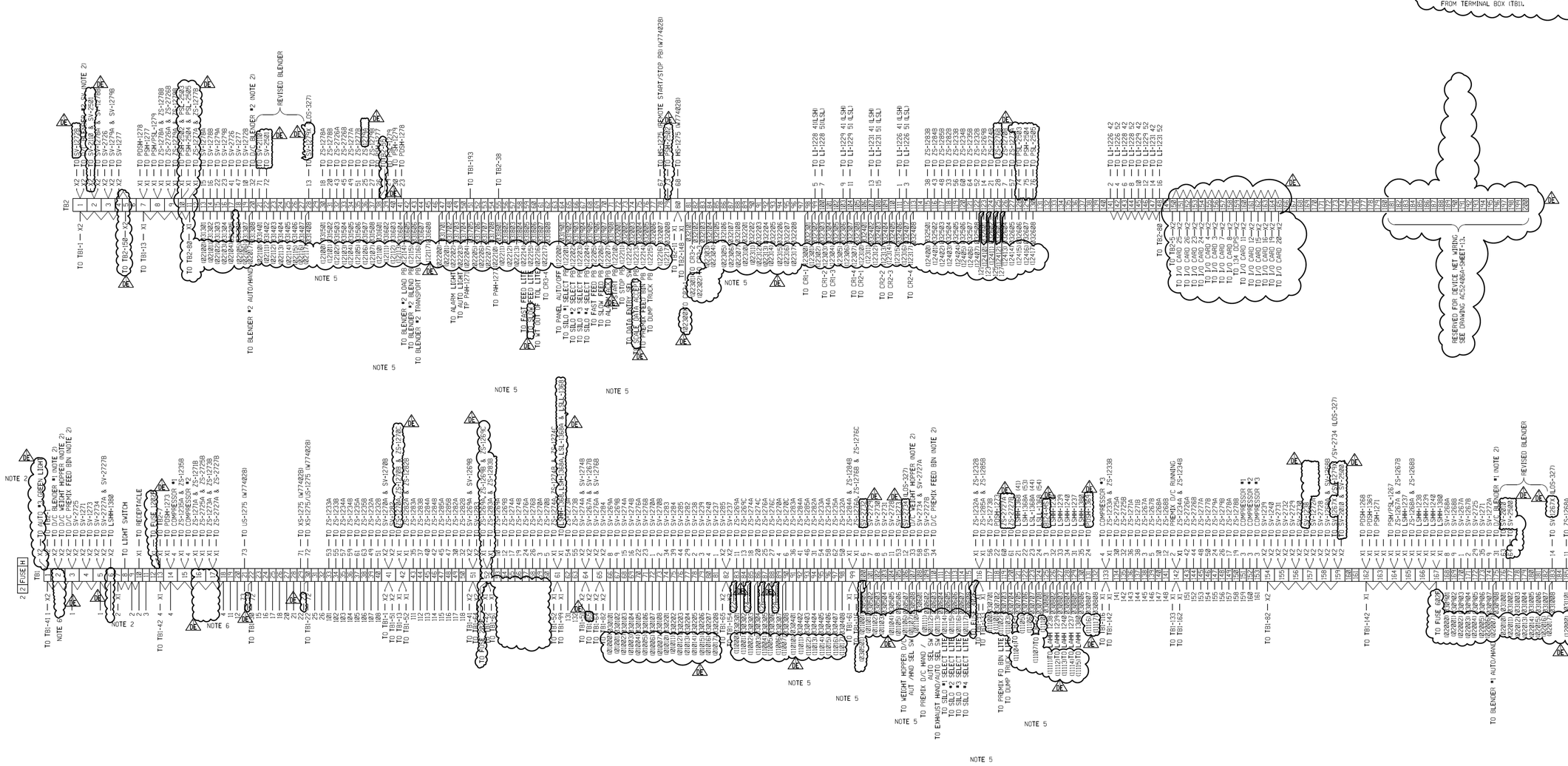

Savannah River Site	
Supplier Document Status	
☑ 1. Work May Proceed	
☐ 2. Submit Final Document-Work May Proceed	
☐ 3. Revise and Resubmit Work- May Proceed Subject to Resolution of Indicated Comments	
☐ 4. Revise and Resubmit-Work May Not Proceed	
☐ 5. Permission to Proceed Not Required	PKG. # 25705
Permission to proceed does not constitute acceptance or approval of design details, calculations, test methods, analysis or materials developed or selected by the supplier, and does not relieve supplier from full compliance with contractual obligations or release of any "holds" placed on the contract.	AC52406A-008-A-NT2
Document Category	1.2
Date	1/30/2007
Reviewer	M. SINGH

SRS Rev. No.	Proj. No.	Changes/Comments	Orig. Date	Checker Date	Approver Date	
DE1	N/A	INCORPORATED J-DCP-Z-07002-J-017, J-DCP-Z-00398, AND J-DCP-Z-00401	APPROVALS MAY BE ATTACHED IN SIGNATURES			SRS Revision To Supplier Document

REV	DATE	REVISION NOTE	BY	APP'D BY
5				
4				
3				
2	1/2/07	MISC REV		
1	12/11/06	ADDED DEVICE NET NOTE		

TITLE: TERMINAL STRIP LAYOUT

U.S. DEPARTMENT OF ENERGY
SAVANNAH RIVER SITE

NOL-TEC SYSTEMS, INC.
MATERIAL HANDLING AND CONTROL SPECIALISTS
LAKE LAKE, MN

© 1998, UNPUBLISHED

DRAWN BY BR | DATE 11/7/06 | SCALE

CATALOG NO.

DRAWING NO. 10879-4 | SHT 04 OF 05

BEFORE

Design Change Notice (DCN)
Continuation Page

DCP No.	M-DCP-Z-11003	Revision 1	Document No.	AC52406A-8	Revision	DE1
DCN No.	M-DCP-Z-11003-J-00007	Revision 1	Project/Task No.	N/A	Page	3 of 5

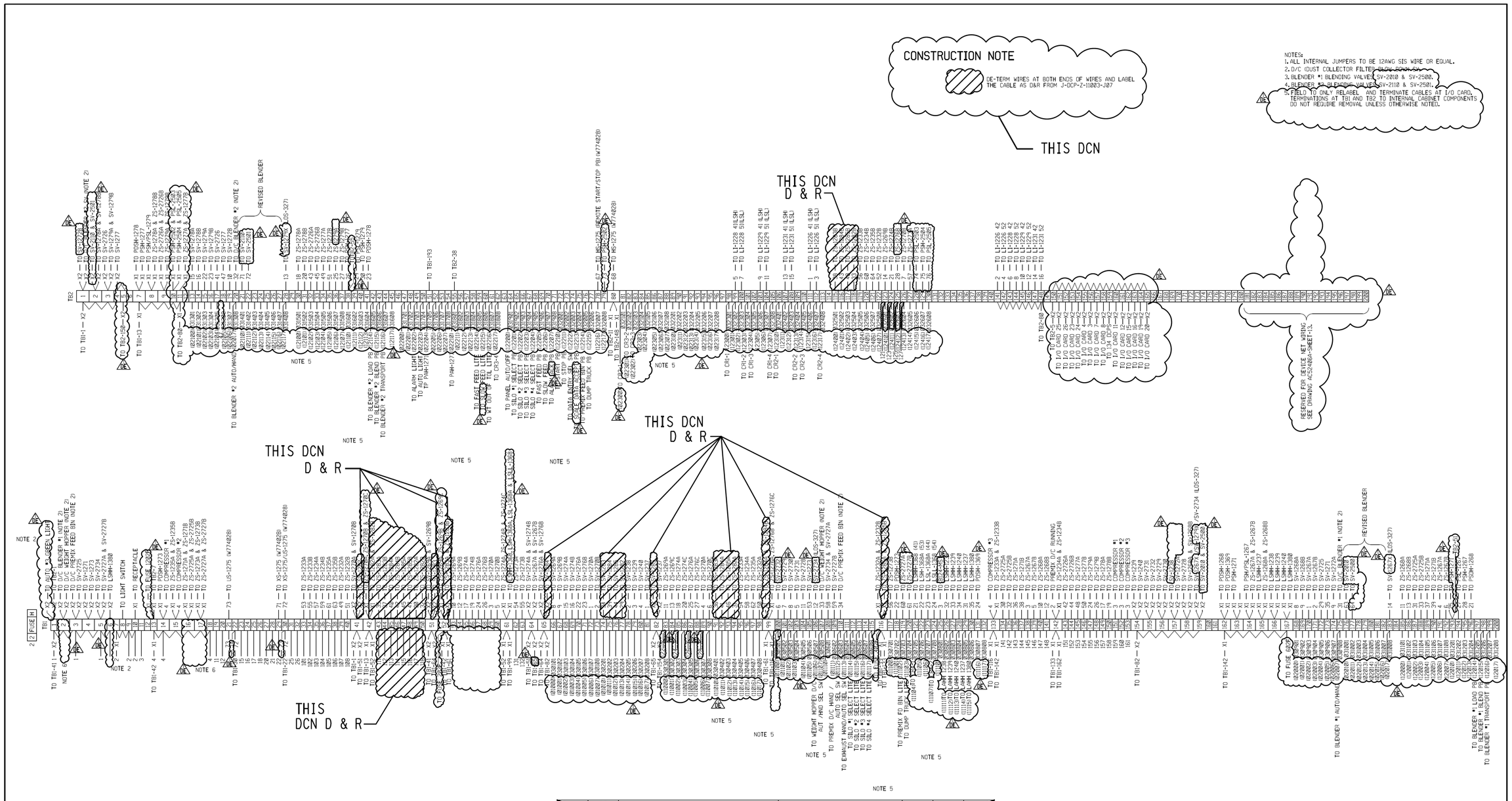

Rev. No.	Mod No.	Changes/Comments	Orig Date	Checker Date	Approver Date	
DE1	N/A	INCORPORATED J-DCP-Z-01002-J-017, J-DCP-Z-11001 AND J-DCP-Z-00001	APPROVALS MAINTAINED ON FILE			SRS Revision To Supplier Document

Savannah River Site

Supplier Document Status

- ☐ 1. Work May Proceed
- ☑ 2. Submit Final Document-Work May Proceed
- ☐ 3. Revise and Resubmit Work May Proceed Subject to Resolution of Indicated Comments
- ☐ 4. Revise and Resubmit-Work May Not Proceed
- ☐ 5. Permission to Proceed Not Required

PKG. # 25705

Permission to proceed does not constitute acceptance or approval of design details, calculations, test methods, analysis or materials developed or selected by the supplier, and does not relieve supplier from full compliance with contractual obligations or release of any "holds" placed on the contract.

AC52406A-008-A-MT2

Document Category: 1.2

Date: 1/30/2007

Reviewer: M. SINGH

REV	DATE	REVISION NOTE	BY	APP'D BY
3				
2				
1				
3	1/2/07	MISC REV		
1	12/11/06	ADDED DEVICE NET NOTE		

TITLE: TERMINAL STRIP LAYOUT

U.S. DEPARTMENT OF ENERGY
SAVANNAH RIVER SITE

DRAWN BY: BR | DATE: 11/7/06 | SCALE:

CATALOG NO.

NOL-TEC SYSTEMS, INC.
MATERIAL CONVEYING AND CONTROL SPECIALISTS
LAND LAKES, MN

© 1998, UNPUBLISHED

DRAWING NO. 10879-4 | SHT 04 OF 05

D & R

Design Change Notice (DCN)
Continuation Page

DCP No.	M-DCP-Z-11003	Revision	1	Document No.	AC52406A-8	Revision	DE1
DCN No.	M-DCP-Z-11003-J-00007	Revision	1	Project/Task No.	N/A	Page	4 of 5

NOTES:
1. ALL INTERNAL JUMPERS TO BE 12AWG SIS WIRE OR EQUAL.
2. D/C (DUST COLLECTOR FILTER BLOW DOWN SV.
3. BLENDER #1 BLENDING VALVES SV-2010 & SV-2500.
4. BLENDER #2 BLENDING VALVES SV-2110 & SV-2501.
5. FIELD TO ONLY RELABEL AND TERMINATE CABLES AT I/O CARD. TERMINATIONS AT TB1 AND TB2 TO INTERNAL CABINET COMPONENTS DO NOT REQUIRE REMOVAL UNLESS OTHERWISE NOTED.
6. FIELD TO REMOVE 12VDC AND 5VDC POWER SUPPLY WIRING FROM TERMINAL BOX (TB1).

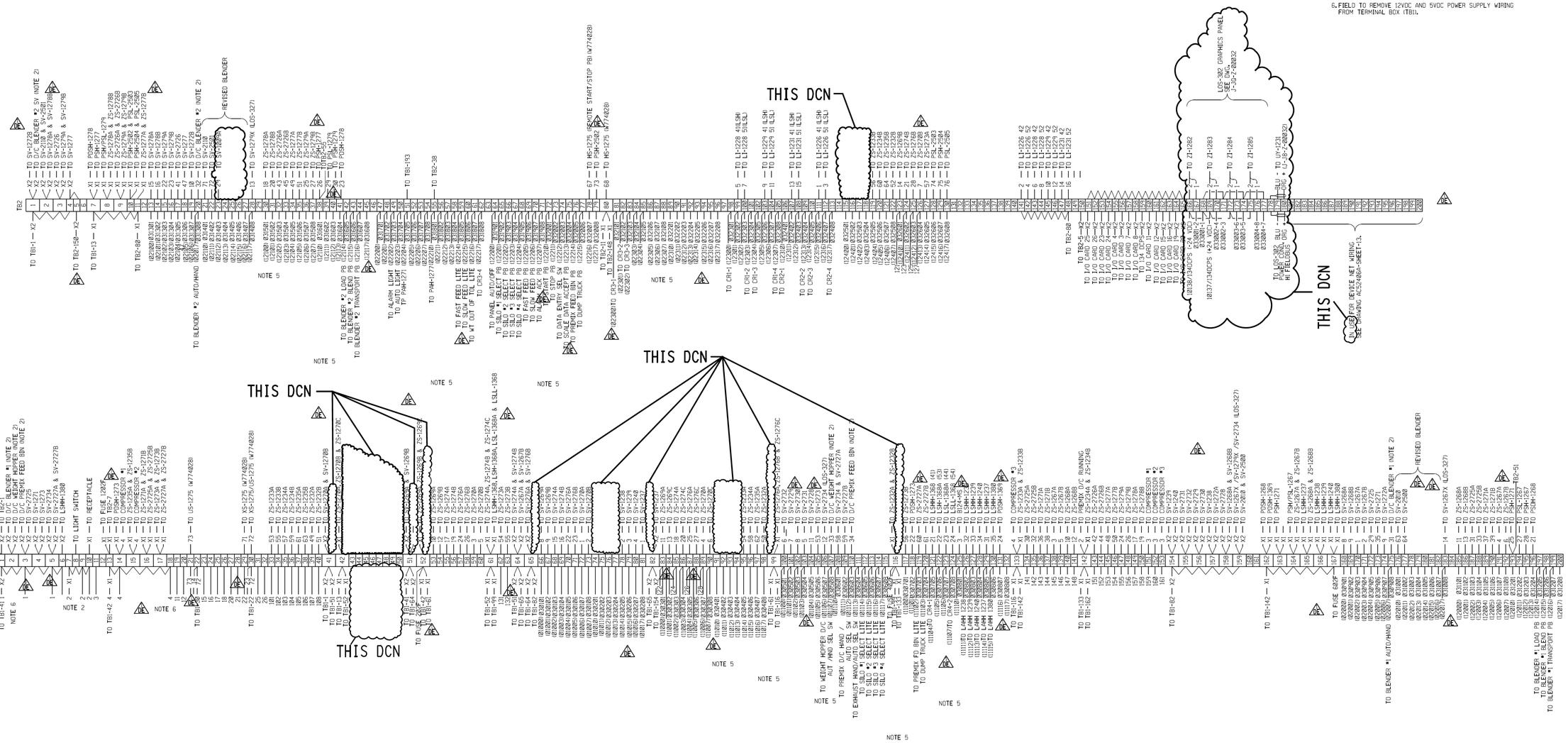

Rev. No.	Mod. No.	Changes/Comments	Orig Date	Checker Date	Approver Date
DE1	N/A	INCORPORATED J-DCP-Z-07002-J-017, J-DCP-Z-11003, AND J-DCP-Z-00001	APPROVALS MAINTAINED ON ORIGINAL		

SRS Revision To Supplier Document

Savannah River Site

Supplier Document Status

- ☑ 1. Work May Proceed
- ☐ 2. Submit Final Document-Work May Proceed
- ☐ 3. Revise and Resubmit Work May Proceed Subject to Resolution of Indicated Comments
- ☐ 4. Revise and Resubmit-Work May Not Proceed
- ☐ 5. Permission to Proceed Not Required

PKG. # 25705

Permission to proceed does not constitute acceptance or approval of design details, calculations, test methods, analysis or materials developed or selected by the supplier, and does not relieve supplier from full compliance with contractual obligations or release of any "holds" placed on the contract.

AC62406A-008-A-MT2

Document Category: 1.2

Date: 1/30/2007

Reviewer: M. SINGH

REV	DATE	REVISION NOTE	BY	APP'D BY
4				
3				
2				
1	1/2/07	MISC REV		
0	12/11/06	ADDED DEVICE NET NOTE		

TITLE: TERMINAL STRIP LAYOUT
U.S. DEPARTMENT OF ENERGY
SAVANNAH RIVER SITE

DRAWN BY: BR
DATE: 11/7/06
SCALE:

CATALOG NO.

NOLTEC SYSTEMS, INC.
MATERIAL HANDLING AND CONTROL SPECIALISTS
LAKE LACHE, MS

© 1998, UNPUBLISHED

DRAWING NO. 10879-4
SHT 04 OF 05

AFTER

Design Change Notice (DCN)
Continuation Page

DCP No.	M-DCP-Z-11003	Revision	1	Document No.	AC62406A-8	Revision	DE1
DCN No.	M-DCP-Z-11003-J-00007	Revision	1	Project/Task No.	N/A	Page	5 of 5

Design Change Notice (DCN)

DCP Number	Revision	
M-DCP-Z-11003	1	
DCN No. M-DCP-Z-11003-J-00008	**Revision** 1	**Project/Task No** N/A

Design Change Notice (DCN)

Classification Reviewer: N/A

Date: 05/21/2019

Design Change Notice (DCN)

DCP Number	Revision	
M-DCP-Z-11003	1	
DCN No.	**Revision**	**Project/Task No**
M-DCP-Z-11003-J-00008	1	N/A

Document No. (Doc Rev)
AC52406A-15;DE1

Reason for Change (Be specific)
Provide Upgrade information for Weigh Hopper

Description of Change
Modify Noltec DCS Output card, Add Silo #4 Air Cannon outputs

Engineering Approvals

Originator	Date	Responsible Engineer Manager	Date
WALKER, DENNIS E.	05/20/2019	SUD, RAJENDRA J.	05/21/2019

Verifier/Checker	Date	Discipline
HEVEL, STEPHEN D.	05/21/2019	J-INSTRUMENTATION AND CONTROLS

Verification Method(s)
Design Check (GS/PS only)

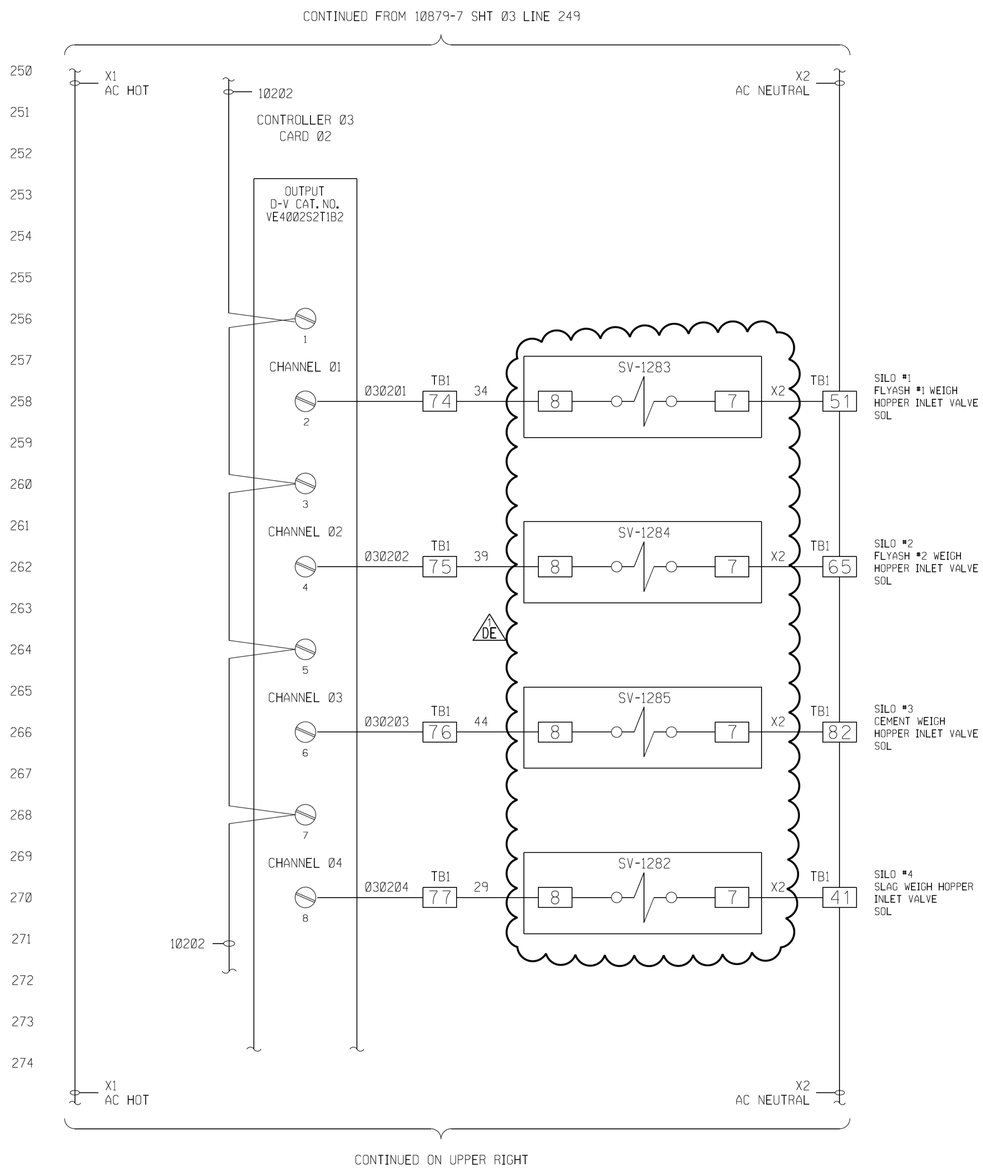

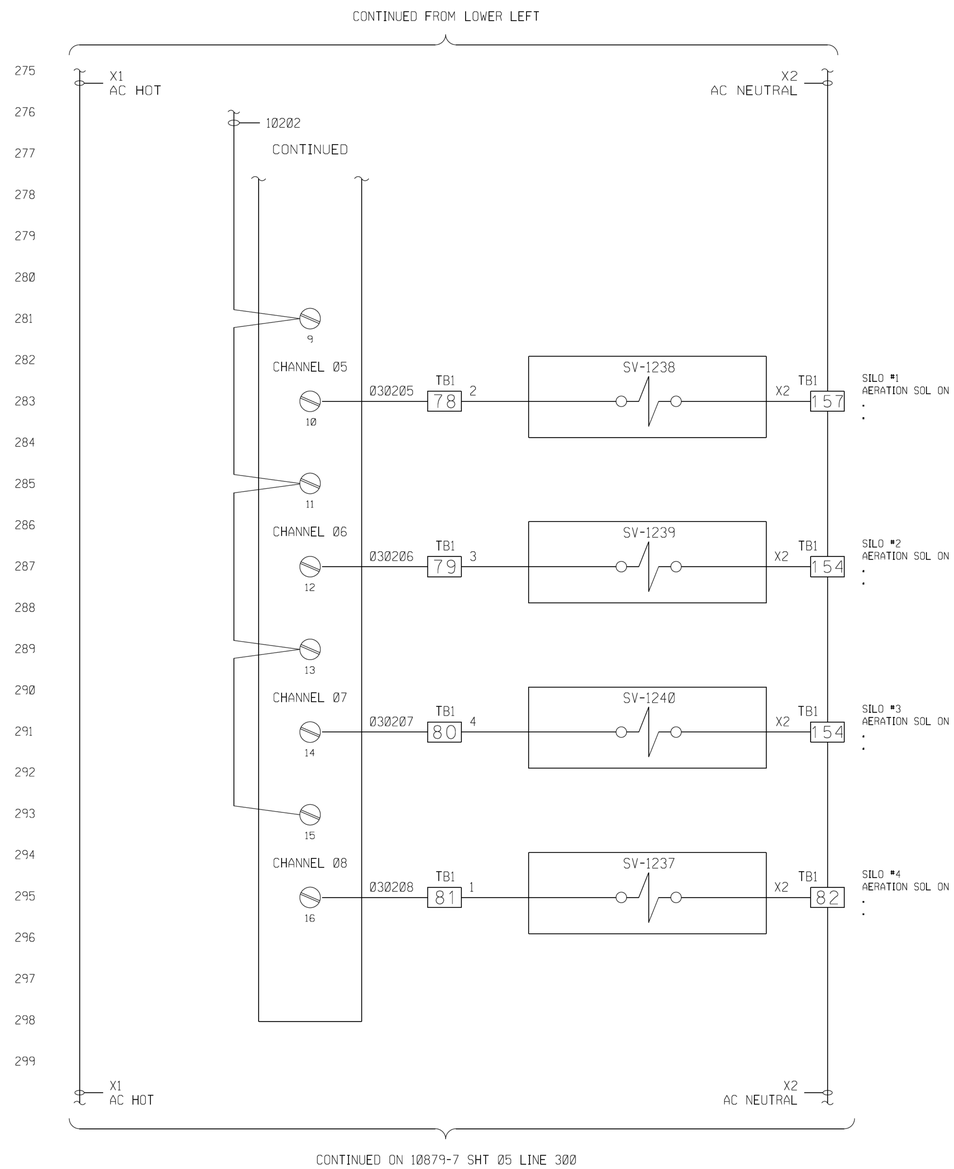

Savannah River Site

Supplier Document Status

- [x] 1. Work May Proceed
- [ ] 2. Submit Final Document-Work May Proceed
- [ ] 3. Revise and Resubmit Work- May Proceed Subject to Resolution of Indicated Comments
- [ ] 4. Revise and Resubmit-Work May Not Proceed
- [ ] 5. Permission to Proceed Not Required

PKG. # 25705

Permission to proceed does not constitute acceptance or approval of design details, calculations, test methods, analysis or materials developed or selected by the supplier, and does not relieve supplier from full compliance with contractual obligations or release of any "holds" placed on the contract.

AC52406A-015-A-NT2

Document Category: 1.4

Date: 1/30/2007

Reviewer: M. SINGH

Rev. No.	Proj No.	Changes/Comments	Orig Date	Checker Date	Approver Date	
DE1	N/A	INCORPORATED J-DCF-Z-00303, J-DCF-Z-00412	APPROVALS MAINTAINED IN DCS/EDMS			SRS Revision To Supplier Document

REV	DATE	REVISION NOTE	BY
3			
2			
1			
1	1/2/07	MISC REV	
0	12/11/06	TITLE BLOCK REV	

TITLE: CONTROLLER 03 CARD 02 I/O WIRING-DCS OUTPUTS

U.S. DEPARTMENT OF ENERGY
SAVANNAH RIVER SITE

DRAWN BY: BR | DATE: 12/4/06
APP'D BY | SCALE

CATALOG NO.

NOLTEC SYSTEMS, INC.
MATERIAL CONVEYING AND CONTROL SPECIALISTS
LINO LAKES, MN

© 1998, UNPUBLISHED

DRAWING NO. 10879-7

SHT 04 OF 28

Design Change Notice (DCN)
Continuation Page

BEFORE

DCF No.	M-DCF-Z-11003	Revision: 1	Revision: 1
DCN No.	M-DCF-Z-11003-J-00008	Document No.	AC52406A-15
		Project Code	N/A
		Revision	DE1
		Page	3 of 5

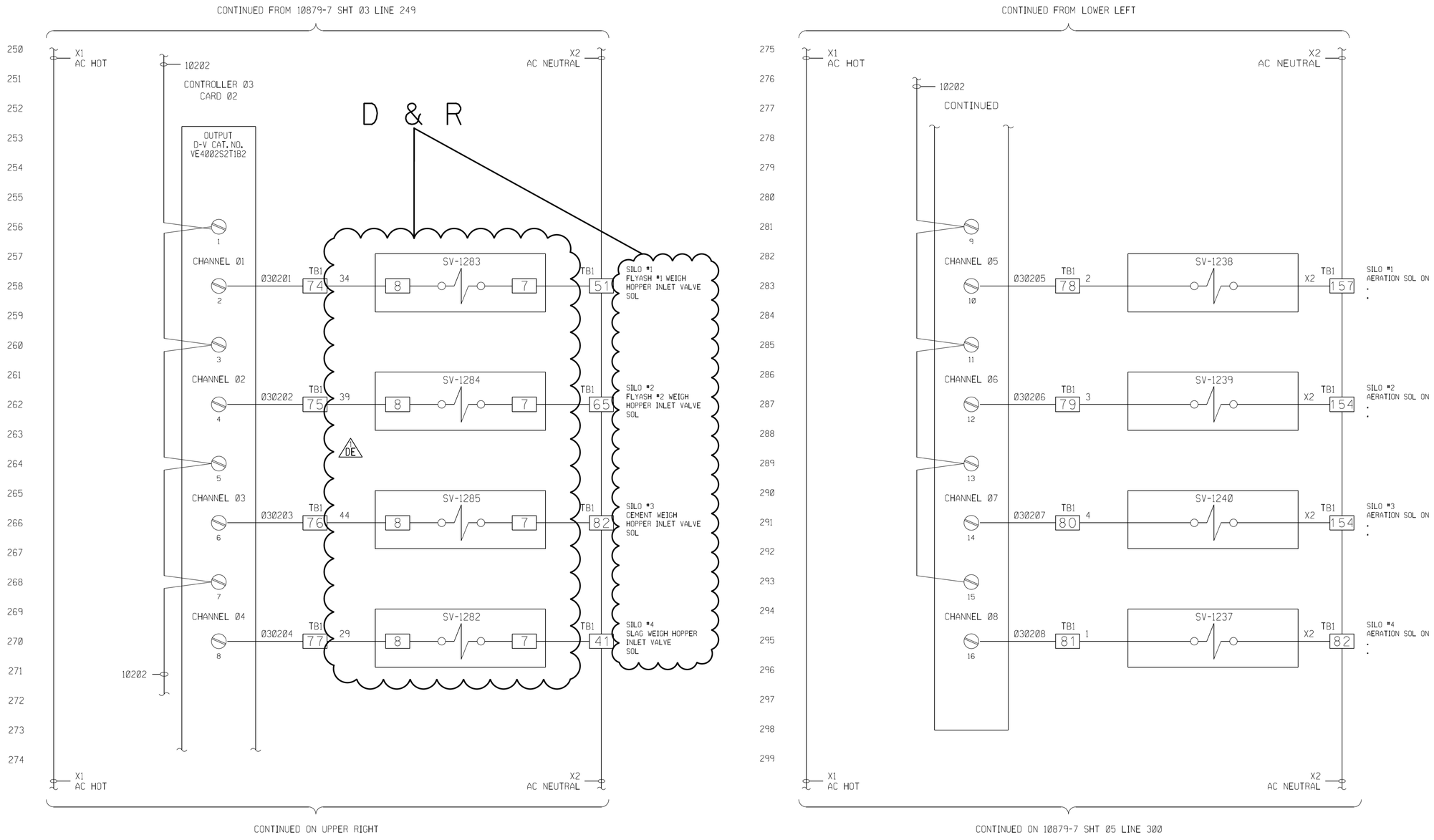

Savannah River Site

Supplier Document Status

- [x] 1. Work May Proceed
- [ ] 2. Submit Final Document-Work May Proceed
- [ ] 3. Revise and Resubmit Work- May Proceed Subject to Resolution of Indicated Comments
- [ ] 4. Revise and Resubmit-Work May Not Proceed
- [ ] 5. Permission to Proceed Not Required

PKG.# 25705

Permission to proceed does not constitute acceptance or approval of design details, calculations, test methods, analysis or materials developed or selected by the supplier, and does not relieve supplier from full compliance with contractural obligations or release of any "holds" placed on the contract.

AC52406A-015-A-MT2

Document Catagory: 1.4

Date: 1/30/2007

Reviewer: M. SINGH

Site Rev. No.	Proj. No.	Changes/Comments	Orig Date	Checker Date	Approver Date
DE1	N/A	INCORPORATED J-DCF-Z-00303, J-DCF-Z-00412	APPROVALS MAINTAINED IN DCS/RDWS		

SRS Revision To Supplier Document

REV	DATE	REVISION NOTE	BY
3			
3			
3			
3	1/2/07	MISC REV	
1	12/11/06	TITLE BLOCK REV	

TITLE: CONTROLLER 03 CARD 02 I/O WIRING-DCS OUTPUTS

U.S. DEPARTMENT OF ENERGY SAVANNAH RIVER SITE

DRAWN BY: BR | DATE: 12/4/06

APP'D BY | SCALE

CATALOG NO.

NOLTEC SYSTEMS, INC. MATERIAL CONVEYING AND CONTROL SPECIALISTS LINO LAKES, MN

© 1998, UNPUBLISHED

DRAWING NO. 10879-7 | SHT 04 OF 28

D & R

Design Change Notice (DCN) Continuation Page

D.C.N. No.	N-DCP-Z-11003	Revision 1	Document No. AC52406A-15
D.C.N. No.	N-DCP-Z-11003-J-00008	Revision 1	Proposal Code N/A

Site Revision DE1 | Page 4 of 5

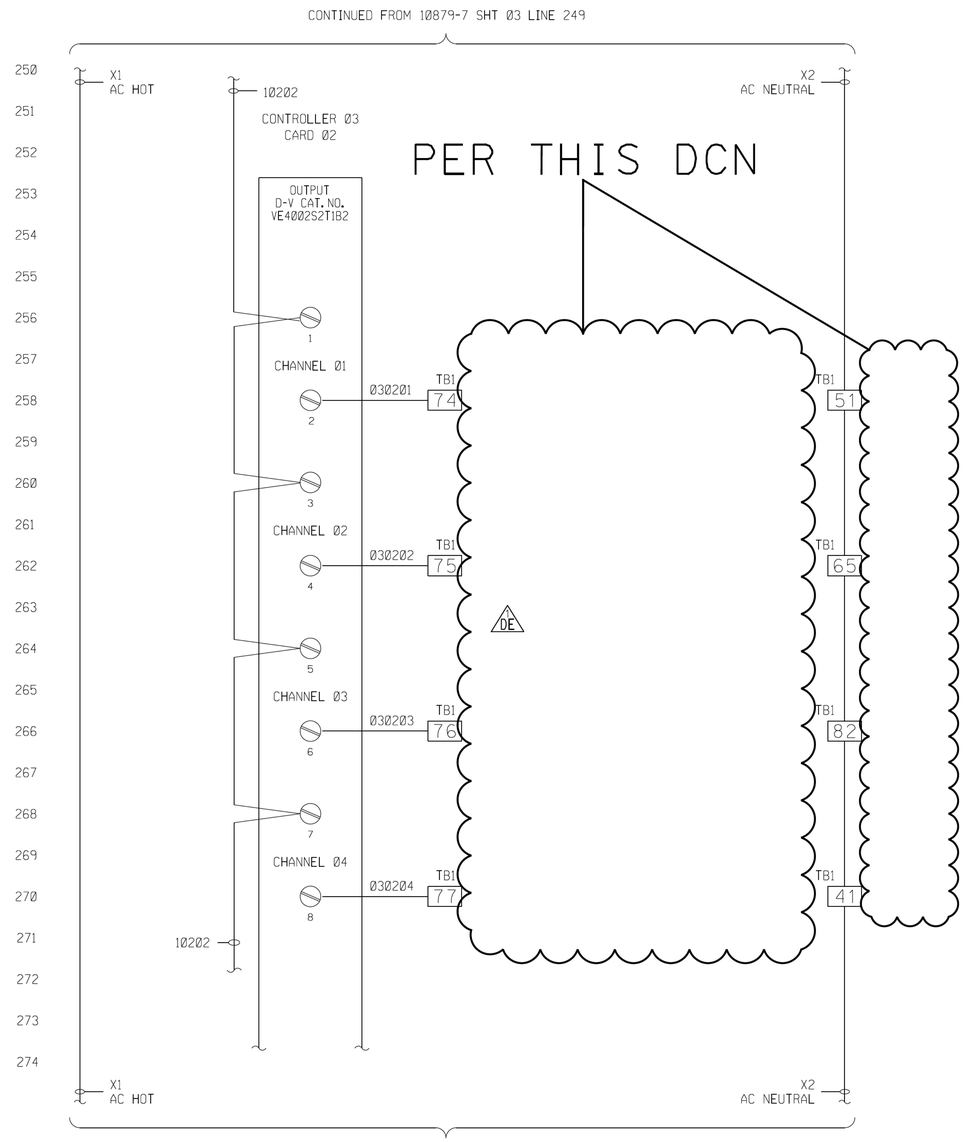

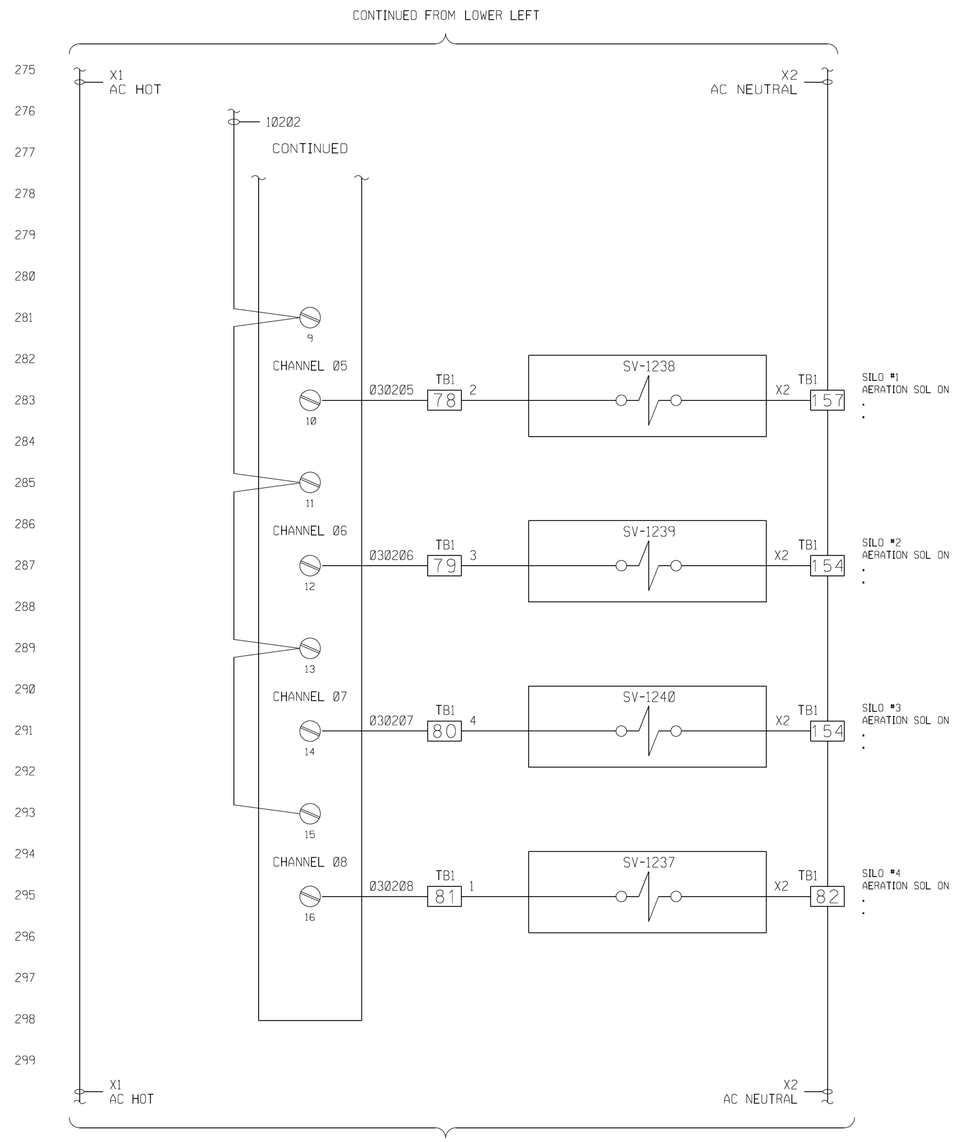

Savannah River Site

Supplier Document Status

- [x] 1. Work May Proceed
- [ ] 2. Submit Final Document-Work May Proceed
- [ ] 3. Revise and Resubmit Work- May Proceed Subject to Resolution of Indicated Comments
- [ ] 4. Revise and Resubmit-Work May Not Proceed
- [ ] 5. Permission to Proceed Not Required

PKG.# 25705

Permission to proceed does not constitute acceptance or approval of design details, calculations, test methods, analysis or materials developed or selected by the supplier, and does not relieve supplier from full compliance with contractual obligations or release of any "holds" placed on the contract.

AC52406A-015-A-MT2

Document Category: 1.4

Date: 1/30/2007

Reviewer: M. SINGH

Site Rev. No.	Proj No.	Changes/Comments	Orig Date	Checker Date	Approver Date	
DE1	N/A	INCORPORATED J-DCF-Z-00303, J-DCF-Z-00412	APPROVALS MAINTAINED IN DCS/REVS			SRS Revision To Supplier Document

REV	DATE	REVISION NOTE	BY
5			
4			
3			
2	1/2/07	MISC REV	
1	12/11/06	TITLE BLOCK REV	

TITLE: CONTROLLER 03 CARD 02 I/O WIRING-DCS OUTPUTS

U.S. DEPARTMENT OF ENERGY
SAVANNAH RIVER SITE

NOLTEC SYSTEMS, INC.
MATERIAL CONVEYING AND CONTROL SPECIALISTS
LAKE LANDER, WA

© 1998, UNPUBLISHED

CATALOG NO.

DRAWN BY: BR | DATE: 12/4/06 | SCALE:

DRAWING NO. 10879-7 | SHT 04 OF 28

Design Change Notice (DCN)
Continuation Page

AFTER

DCF No.	N-DCF-Z-11003	Document No.	AC52406A-15
Site No.	N-DCF-Z-11003-J-00008	Revision	N/A
Revision	1	Revision	1
Revision	DE1	Page	5 of 5

Design Change Notice (DCN)

DCP Number	Revision	
M-DCP-Z-11003	1	
DCN No. M-DCP-Z-11003-J-00009	**Revision** 1	**Project/Task No** N/A

Design Change Notice (DCN)

Classification Reviewer: N/A

Date: 05/21/2019

Design Change Notice (DCN)

DCP Number	Revision	
M-DCP-Z-11003	1	
DCN No.	**Revision**	**Project/Task No**
M-DCP-Z-11003-J-00009	1	N/A

Document No. (Doc Rev)
AC52406A-17;DE1

Reason for Change (Be specific)
Provide Upgrade information for Weigh Hopper

Description of Change
Delete position switches ZS-1282A,1283A,1284A and 1285A.

Engineering Approvals

Originator	Date	Responsible Engineer Manager	Date
WALKER, DENNIS E.	05/20/2019	SUD, RAJENDRA J.	05/21/2019

Verifier/Checker	Date	Discipline
HEVEL, STEPHEN D.	05/21/2019	J-INSTRUMENTATION AND CONTROLS

Verification Method(s)
Design Check (GS/PS only)

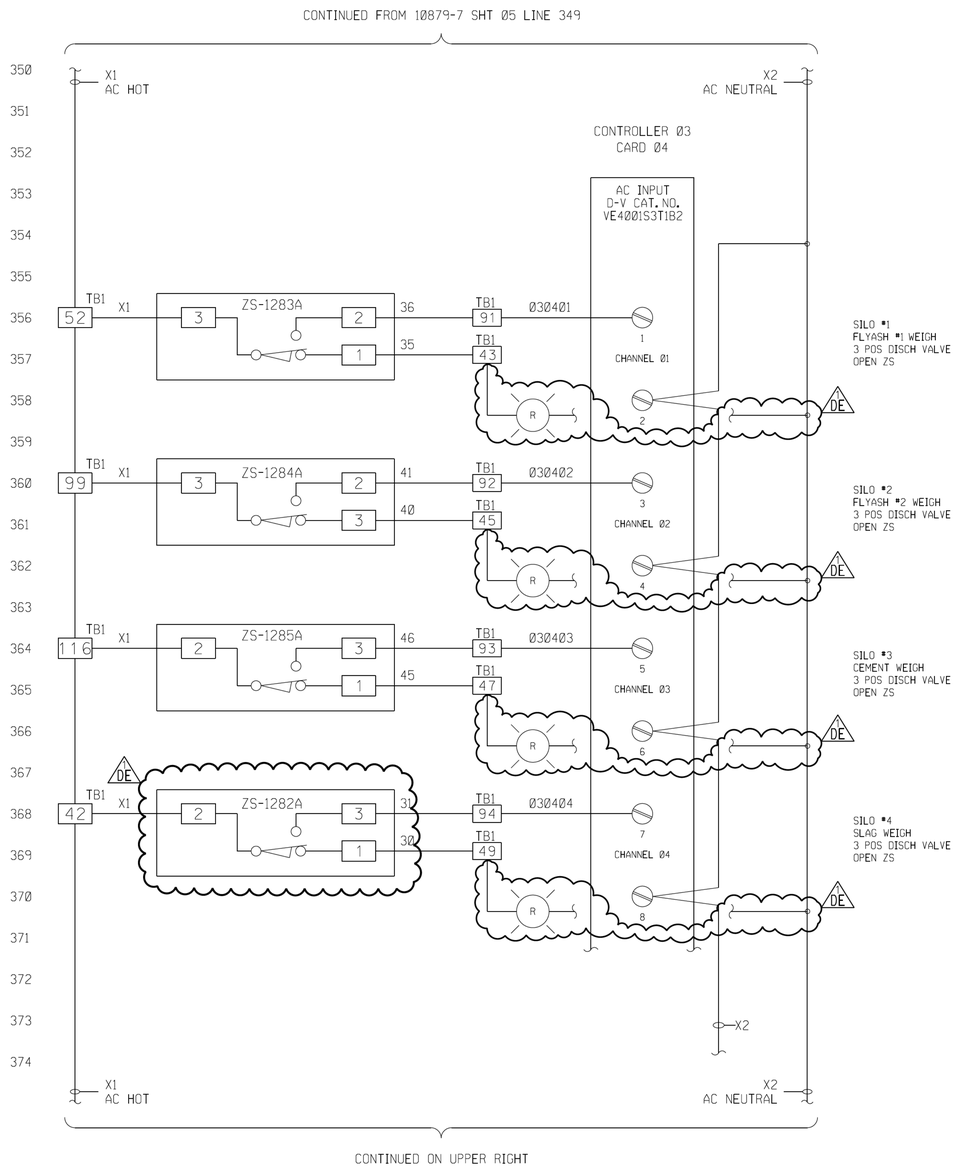

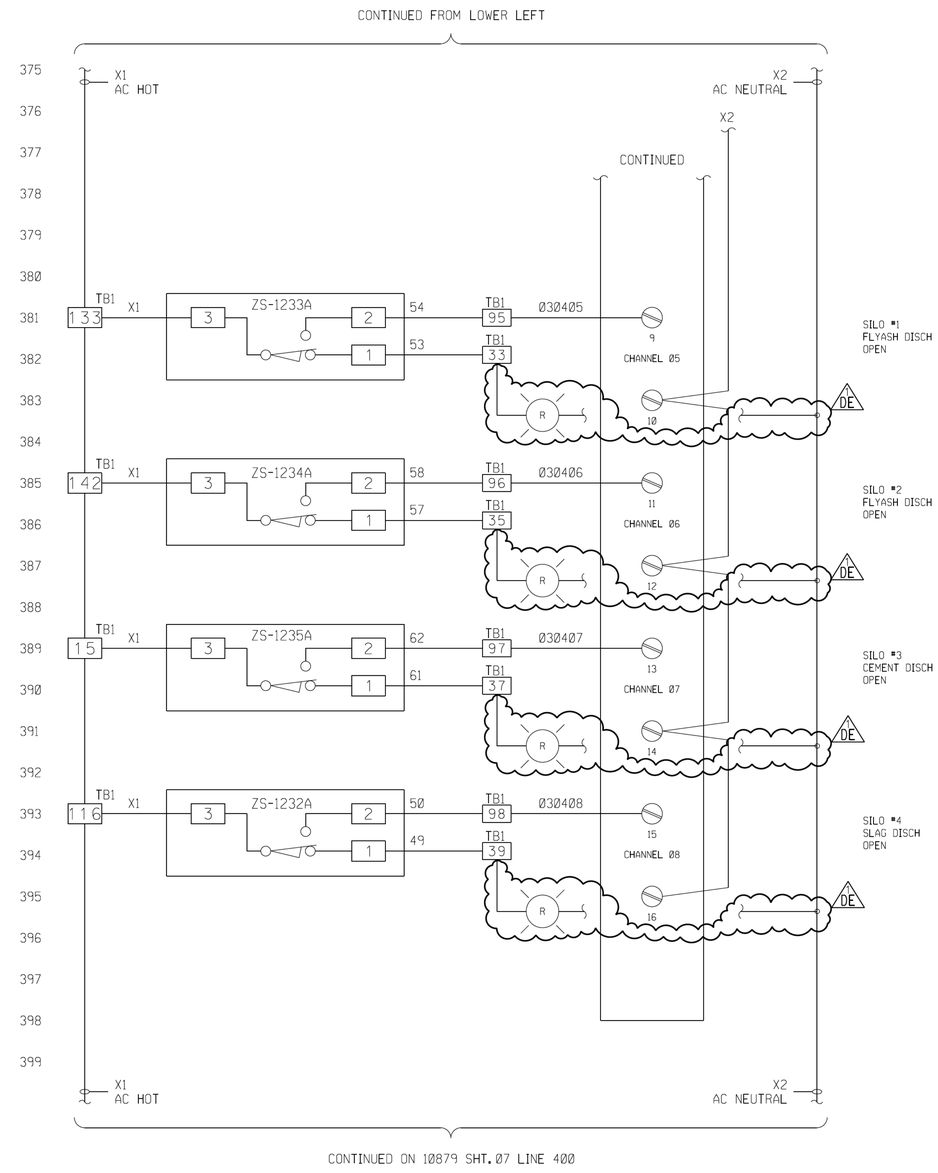

Savannah River Site

Supplier Document Status

- [x] 1. Work May Proceed
- [ ] 2. Submit Final Document-Work May Proceed
- [ ] 3. Revise and Resubmit Work- May Proceed Subject to Resolution of Indicated Comments
- [ ] 4. Revise and Resubmit-Work May Not Proceed
- [ ] 5. Permission to Proceed Not Required

PKG. # 25705

Permission to proceed does not constitute acceptance or approval of design details, calculations, test methods, analysis or materials developed or selected by the supplier, and does not relieve supplier from full compliance with contractual obligations or release of any "holds" placed on the contract.

AC52406A-017-A-MT2

Document Category: 1.4

Date: 1/30/2007

Reviewer: M. SINGH

Shop Rev. No.	Proj No.	Changes/Comments	Orig Date	Checker Date	Approver Date	
DE1	N/A	INCORPORATED J-DCF-Z-00303, J-DCF-Z-00402-J-042, J-DCF-Z-00612				SRS Revision To Supplier Document

REV	DATE	REVISION NOTE	BY
3			
2			
1			
4	12/29/06	MISC REV	
3	12/11/06	TITLE BLOCK REV	

TITLE: CONTROLLER 03 CARD 04 I/O WIRING-DCS OUTPUTS

U.S. DEPARTMENT OF ENERGY SAVANNAH RIVER SITE

DRAWN BY: BR | DATE: 6/8/06 | APP'D BY | SCALE

CATALOG NO.

NOLTEC SYSTEMS, INC. MATERIAL CONVEYING AND CONTROL SPECIALISTS LAKE LACHE, MN

© 1998, UNPUBLISHED

DRAWING NO. 10879-7 | SHT 06 OF 28

Design Change Notice (DCN) Continuation Page

BEFORE

DCN No. N-DCP-Z-11003	Revision 1	Document No. AC52406A-17	Revision DE1
SCN No. N-DCP-Z-11003-J-00009	Revision 1	Requisition No. N/A	Page 3 of 5

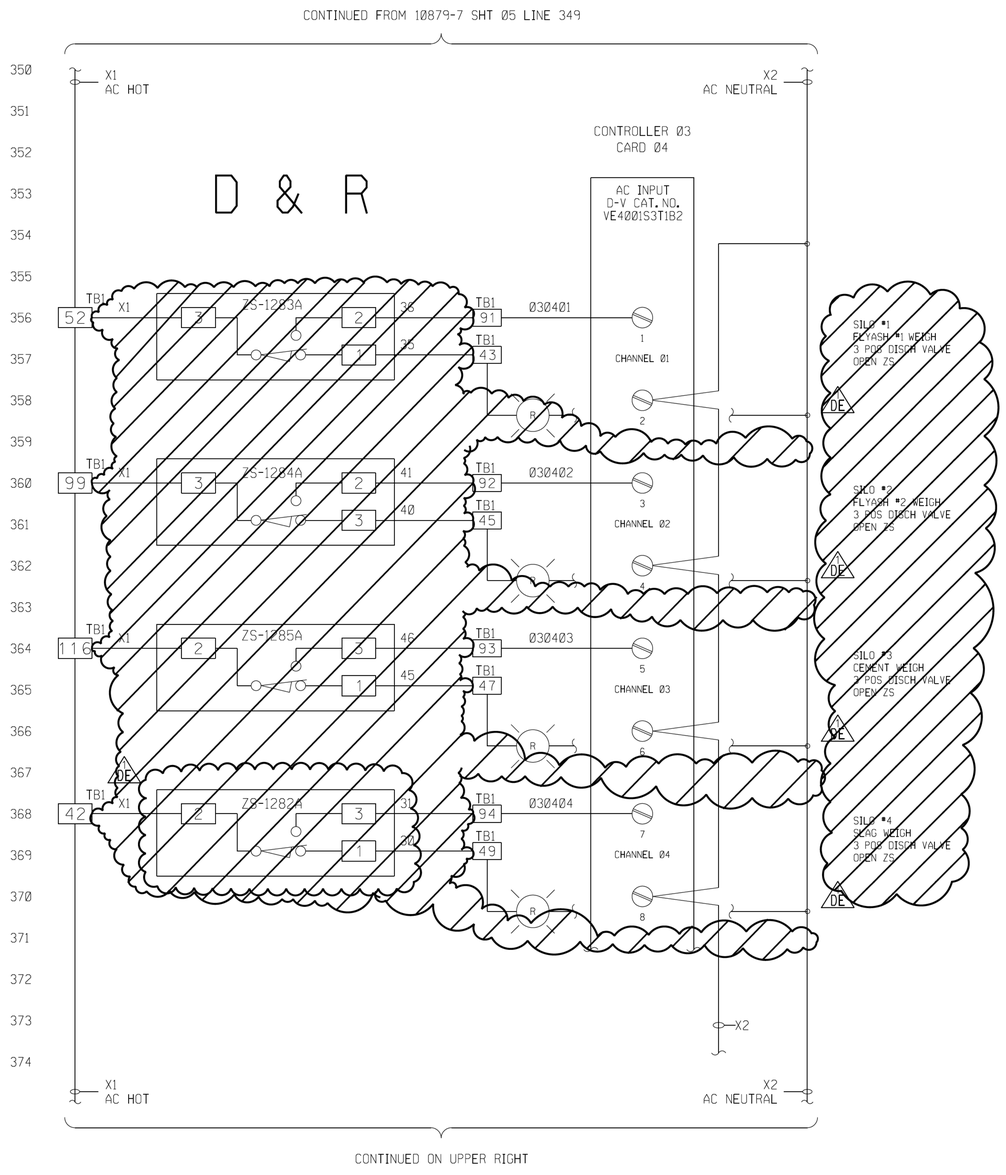

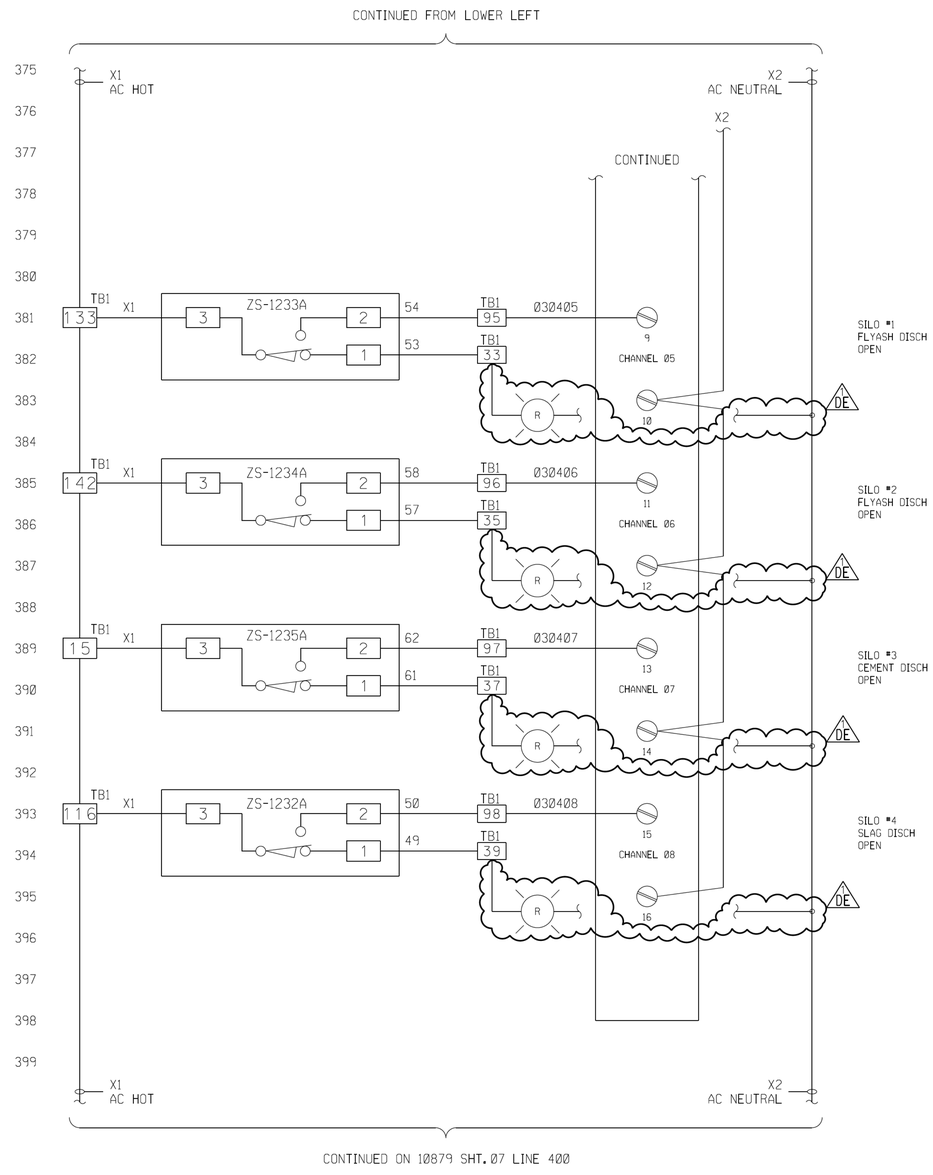

Savannah River Site

Supplier Document Status

- [x] 1. Work May Proceed
- [ ] 2. Submit Final Document-Work May Proceed
- [ ] 3. Revise and Resubmit Work- May Proceed Subject to Resolution of Indicated Comments
- [ ] 4. Revise and Resubmit-Work May Not Proceed
- [ ] 5. Permission to Proceed Not Required

PKG. # 25705

Permission to proceed does not constitute acceptance or approval of design details, calculations, test methods, analysis or materials developed or selected by the supplier, and does not relieve supplier from full compliance with contractual obligations or release of any "holds" placed on the contract.

AC52406A-017-A-NT2

Document Category: 1.4

Date: 1/30/2007

Reviewer: M. SINGH

Shop Rev. No.	Proj No.	Changes/Comments	Orig Date	Checker Date	Approver Date	
DE1	N/A	INCORPORATED J-DCF-Z-00303, J-DCF-Z-00402-J-042, J-DCF-Z-00612				SRS Revision To Supplier Document

REV	DATE	REVISION NOTE	BY
4			
3			
2			
1	12/29/06	MISC REV	
0	12/11/06	TITLE BLOCK REV	

TITLE: CONTROLLER 03 CARD 04 I/O WIRING-DCS OUTPUTS

U.S. DEPARTMENT OF ENERGY SAVANNAH RIVER SITE

DRAWN BY: BR DATE: 6/8/06 APP'D BY: SCALE:

NOLTEC SYSTEMS, INC. MATERIAL CONVEYING AND CONTROL SPECIALISTS LINO LAKES, MN

© 1998, UNPUBLISHED

CATALOG NO.

DRAWING NO. 10879-7 SHT 06 OF 28

D & R

Design Change Notice (DCN) Continuation Page

D.C.F. No. N-DCP-Z-11003	Revision 1	Document No. AC52406A-17	Revision DE1
SCN No. N-DCP-Z-11003-J-00009	Revision 1	Project Line N/A	Page 4 of 5

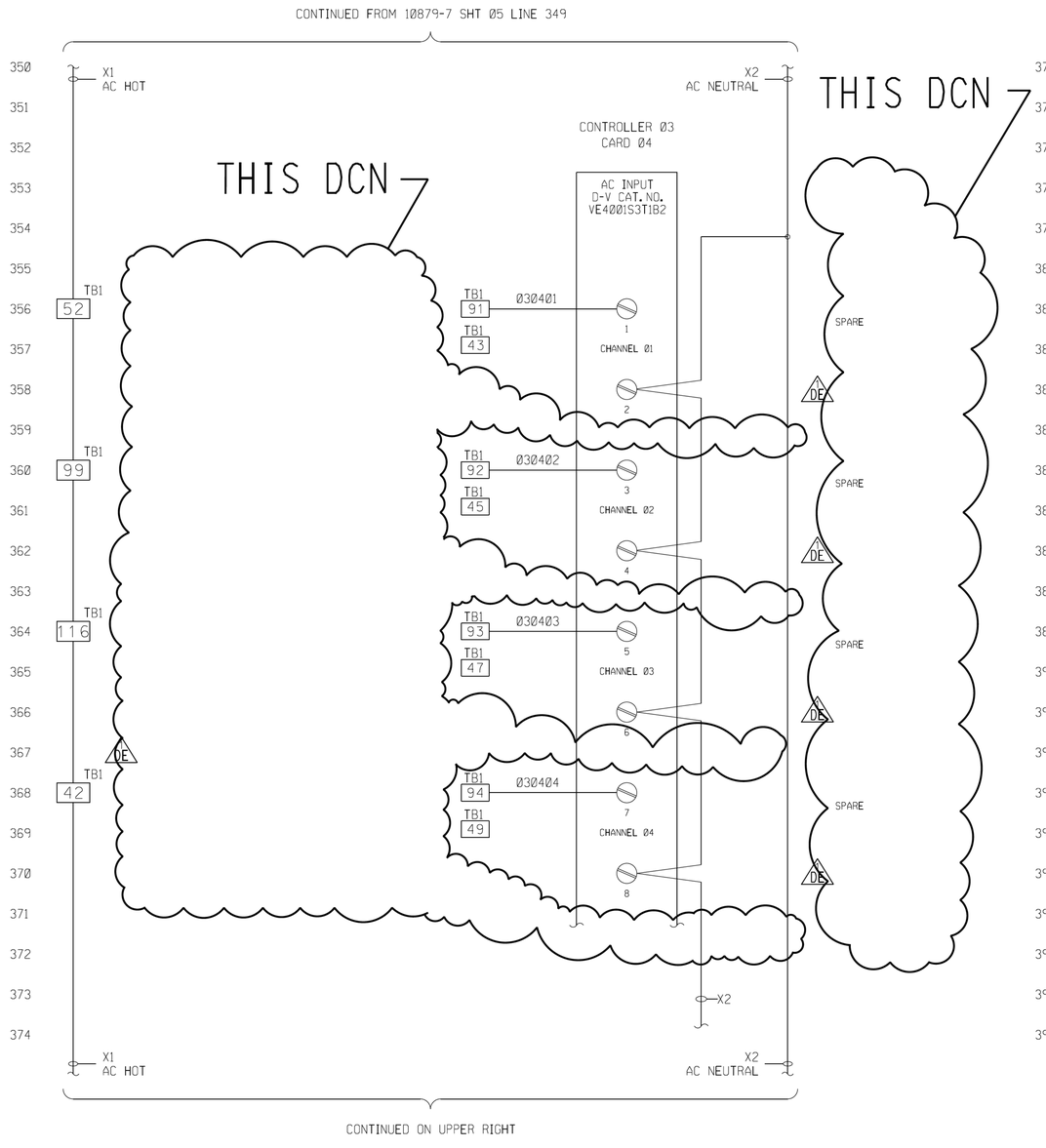

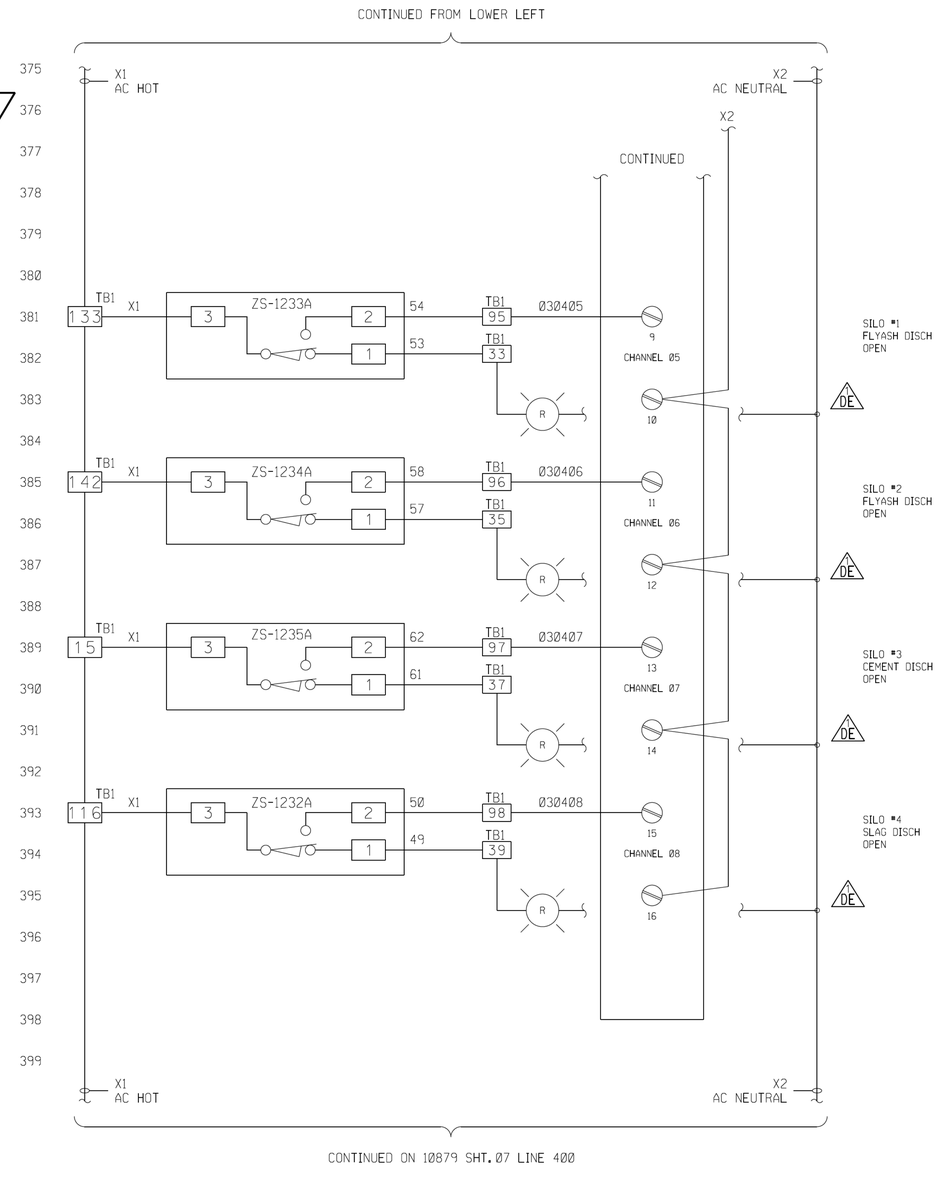

Savannah River Site

Supplier Document Status

- [x] 1. Work May Proceed
- [ ] 2. Submit Final Document-Work May Proceed
- [ ] 3. Revise and Resubmit Work- May Proceed Subject to Resolution of Indicated Comments
- [ ] 4. Revise and Resubmit-Work May Not Proceed
- [ ] 5. Permission to Proceed Not Required

PKG. # 25705

Permission to proceed does not constitute acceptance or approval of design details, calculations, test methods, analysis or materials developed or selected by the supplier, and does not relieve supplier from full compliance with contractual obligations or release of any "holds" placed on the contract.

AC52406A-017-A-MT2

Document Category: 1.4

Date: 1/30/2007

Reviewer: M. SINGH

DCN Rev. No.	Proj No.	Changes/Comments	Orig Date	Checker Date	Approver Date	
DE1	N/A	INCORPORATED J-DCF-Z-00303, J-DCF-Z-00402-J-042, J-DCF-Z-00612				SRS Revision To Supplier Document

REV	DATE	REVISION NOTE	BY
4			
3			
2			
1	12/29/06	MISC REV	
0	12/11/06	TITLE BLOCK REV	

TITLE: CONTROLLER 03 CARD 04 I/O WIRING-DCS OUTPUTS

U.S. DEPARTMENT OF ENERGY SAVANNAH RIVER SITE

DRAWN BY: BR DATE: 6/8/06

APP'D BY: SCALE:

CATALOG NO.

NOL-TEC SYSTEMS, INC. MATERIAL CONVEYING AND CONTROL SPECIALISTS LAKE ZURICH, IL

© 1998, UNPUBLISHED

DRAWING NO. 10879-7 SHT 06 OF 28

AFTER

Design Change Notice (DCN) Continuation Page

DCF No. M-DCF-Z-11003 DCN No. M-DCF-Z-11003-J-00009 Revision 1 Revision 1 Document No. AC52406A-17 Project Task N/A Revision DE1 Page 5 of 5

Design Change Notice (DCN)

DCP Number	Revision	
M-DCP-Z-11003	1	
DCN No. M-DCP-Z-11003-J-00010	**Revision** 1	**Project/Task No** N/A

Design Change Notice (DCN)

Classification Reviewer: N/A

Date: 05/21/2019

Design Change Notice (DCN)

DCP Number	Revision	
M-DCP-Z-11003	1	
DCN No.	**Revision**	**Project/Task No**
M-DCP-Z-11003-J-00010	1	N/A

Document No. (Doc Rev)
AC52406A-38;DE2

Reason for Change (Be specific)
Provide Upgrade information for Weigh Hopper

Description of Change
Modify DCS I/O.

Engineering Approvals

Originator	Date	Responsible Engineer Manager	Date
WALKER, DENNIS E.	05/20/2019	SUD, RAJENDRA J.	05/21/2019

Verifier/Checker	Date	Discipline
HEVEL, STEPHEN D.	05/21/2019	J-INSTRUMENTATION AND CONTROLS

Verification Method(s)
Design Check (GS/PS only)

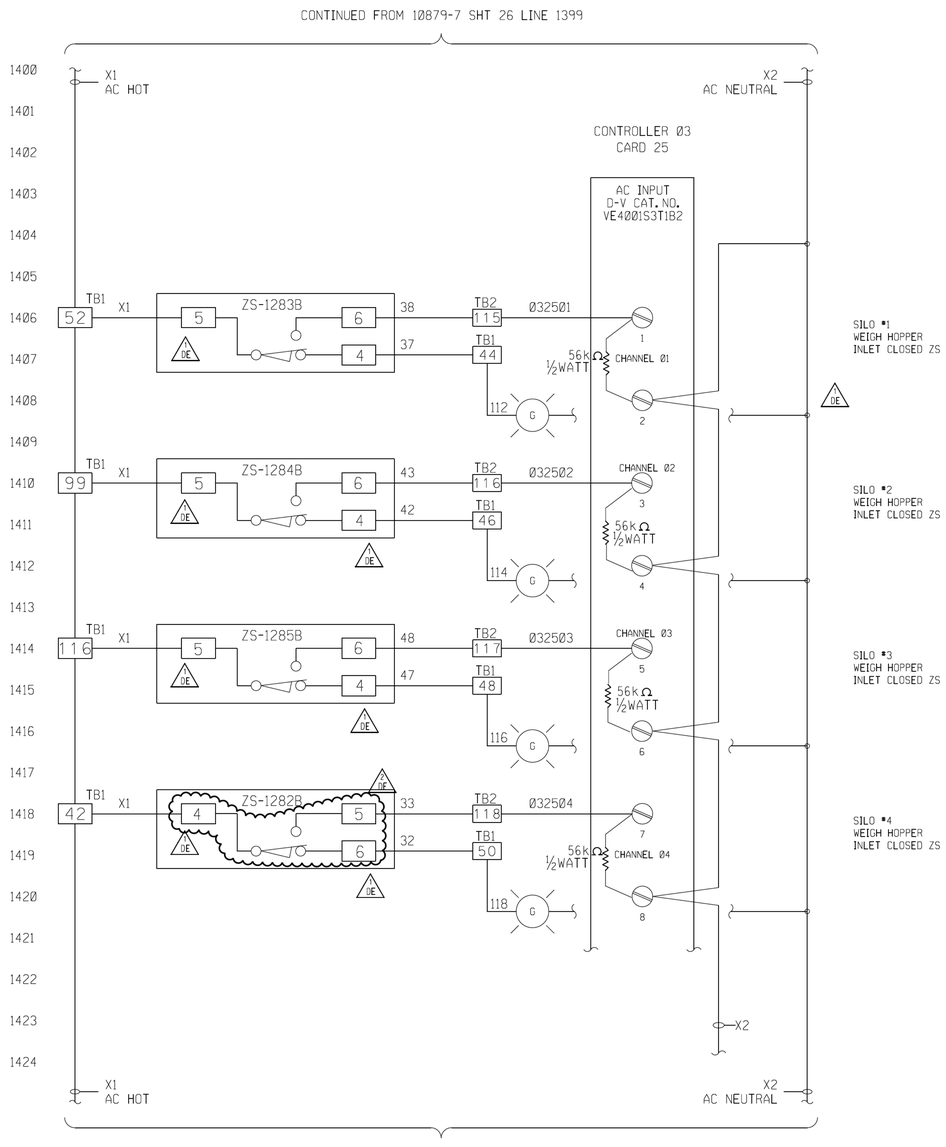

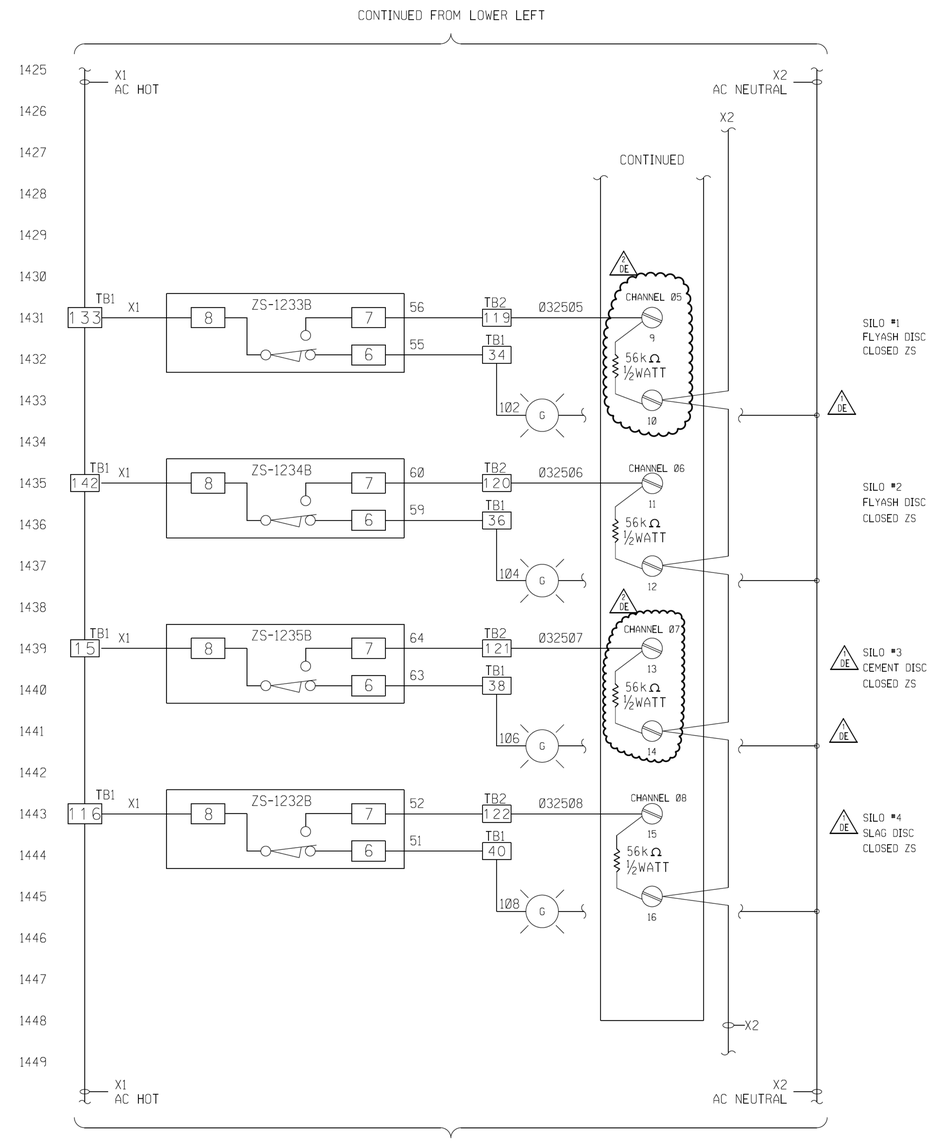

Savannah River Site

Supplier Document Status

- [x] 1. Work May Proceed
- [ ] 2. Submit Final Document-Work May Proceed
- [ ] 3. Revise and Resubmit Work- May Proceed Subject to Resolution of Indicated Comments
- [ ] 4. Revise and Resubmit-Work May Not Proceed
- [ ] 5. Permission to Proceed Not Required

PKG.# 25705

Permission to proceed does not constitute acceptance or approval of design details, calculations, test methods, analysis or materials developed or selected by the supplier, and does not relieve supplier from full compliance with contractural obligations or release of any "holds" placed on the contract.

AC52406A-038-A-MT2

Document Category: 1.4

Date: 1/30/2007

Reviewer: M. SINGH

WSRC Rev No.	Proj. No.	Changes / Comments	Originator / DATE	Checker / DATE	Approver / DATE	WSRC
DE1	N/A	INCORPORATED J-DCF-Z-00303, J-DCF-Z-00401, J-DCF-Z-00408, J-DCF-Z-00410, AND J-DCP-Z-07002 (REF DCN J027).	APPROVALS	MAINTAINED IN DCR/EDWS	MICROFILM 06/30/10	Revisions to Supplier Document
DE2	N/A	INCORPORATED J-DCF-Z-00560, J-DCF-Z-00574, AND J-DCF-Z-00612	APPROVALS	MAINTAINED IN DCR/EDWS	MICROFILM	

REV	DATE	REVISION NOTE	BY	APP'D BY
3				
2				
1				
0	12/29/06	MISC REV		
	12/11/06	TITLE BLOCK REV		

TITLE: CONTROLLER 03 CARD 25 I/O WIRING-DCS OUTPUTS

U.S. DEPARTMENT OF ENERGY SAVANNAH RIVER SITE

DRAWN BY: BR DATE: 6/8/06 SCALE:

NOLTEC SYSTEMS, INC. MATERIAL CONVEYING AND CONTROL SPECIALISTS LAKE LACLAN, MN

© 1998, UNPUBLISHED

CATALOG NO.

DRAWING NO. 10879-7 SHT 27 OF 28

AC52406A-38-DE2

LAST CADD REV BY : R.A KING DATE : 06/30/10

Design Change Notice (DCN) Continuation Page

BEFORE

ECO No. N-DCP-Z-11003 Revision 1 Document No. AC52406A-38 Revision DE2

SCN No. N-DCP-Z-11003-J-00010 Revision 1 Project/Unit No. N/A Page 3 of 5

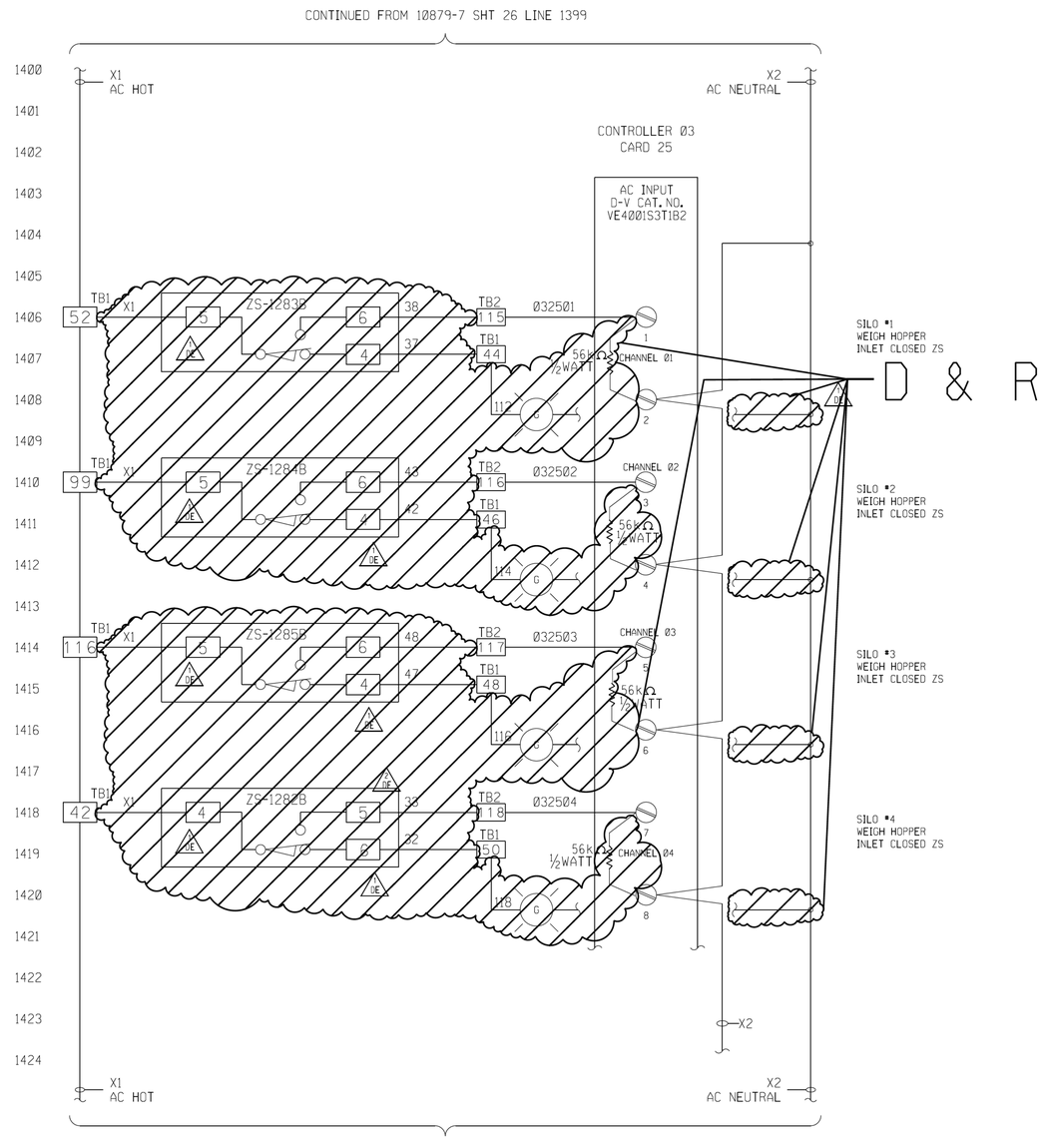

D & R

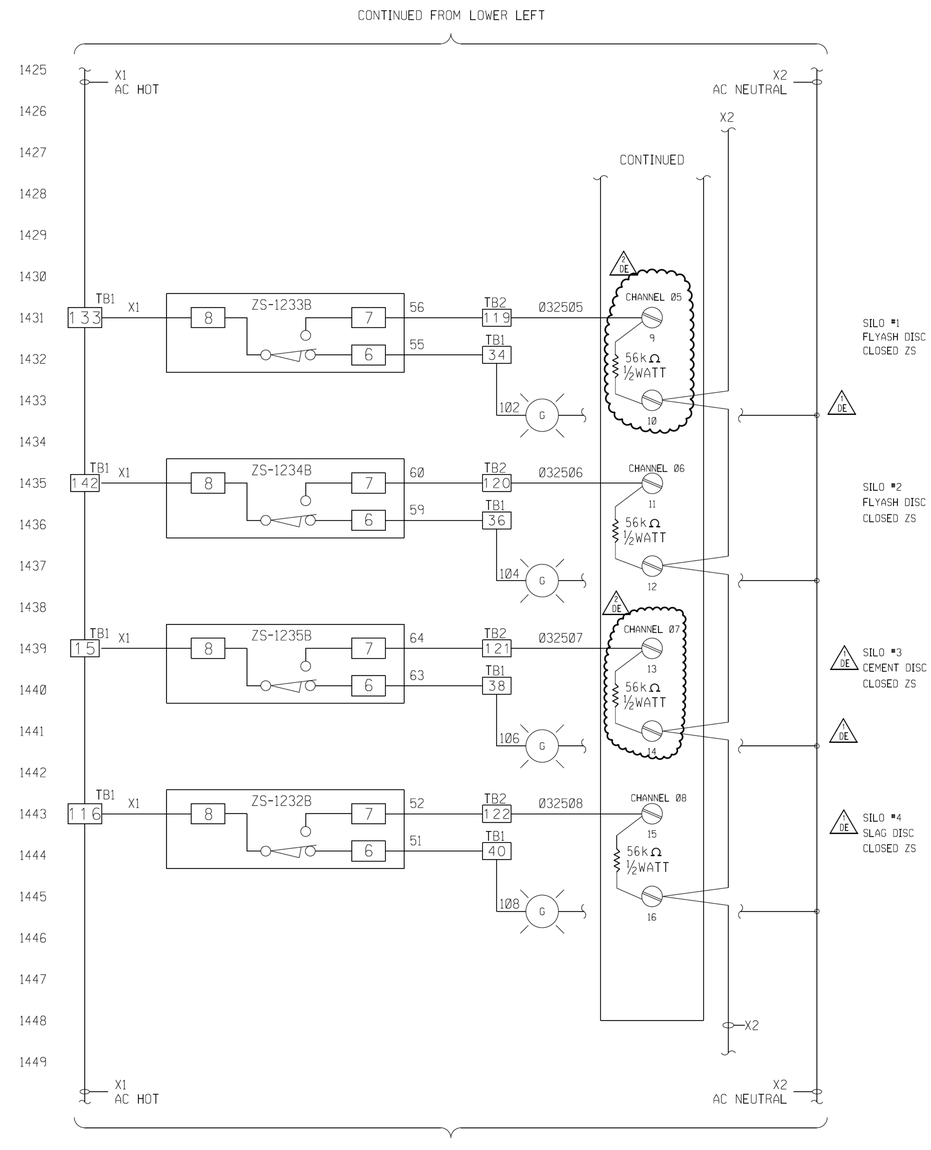

Savannah River Site

Supplier Document Status

- [x] 1. Work May Proceed
- [ ] 2. Submit Final Document-Work May Proceed
- [ ] 3. Revise and Resubmit Work- May Proceed Subject to Resolution of Indicated Comments
- [ ] 4. Revise and Resubmit-Work May Not Proceed
- [ ] 5. Permission to Proceed Not Required

PKG.# 25705

Permission to proceed does not constitute acceptance or approval of design details, calculations, test methods, analysis or materials developed or selected by the supplier, and does not relieve supplier from full compliance with contractural obligations or release of any "holds" placed on the contract.

AC52406A-038-A-NT2

Document Category: 1.4

Date: 1/30/2007

Reviewer: M. SINGH

WSRC Rev No.	Proj. No.	Changes / Comments	Originator / DATE	Checker / DATE	Approver / DATE	WSRC
DE1	N/A	INCORPORATED J-DCF-Z-00303, J-DCF-Z-00401, J-DCF-Z-00408, J-DCF-Z-00410, AND J-DCP-Z-07002 (REF DCN J027).	APPROVALS	MAINTAINED IN DCR/EDWS	MICROFILM 06/30/10	Revisions to Supplier Document
DE2	N/A	INCORPORATED J-DCF-Z-00560, J-DCF-Z-00574, AND J-DCF-Z-00612	APPROVALS	MAINTAINED IN DCR/EDWS	MICROFILM	

REV	DATE	REVISION NOTE	BY	APP'D BY
4				
3				
2				
1	12/29/06	MISC REV		
0	12/11/06	TITLE BLOCK REV		

TITLE: CONTROLLER 03 CARD 25 I/O WIRING-DCS OUTPUTS

U.S. DEPARTMENT OF ENERGY SAVANNAH RIVER SITE

DRAWN BY: BR DATE: 6/8/06 SCALE:

CATALOG NO.

NOLTEC SYSTEMS, INC. MATERIAL CONVEYING AND CONTROL SPECIALISTS LAKE LACLAN, MN

© 1998, UNPUBLISHED

DRAWING NO. 10879-7 SHT 27 OF 28

AC52406A-38-DE2

LAST CADD REV BY : R.A KING DATE : 06/30/10

D & R

Design Change Notice (DCN) Continuation Page

ECO No. N-DCP-Z-11003	Revision 1	Document No. AC52406A-38	Revision DE2
SCN No. N-DCP-Z-11003-J-00010	Revision 1	Project/Unit N/A	Page 4 of 5

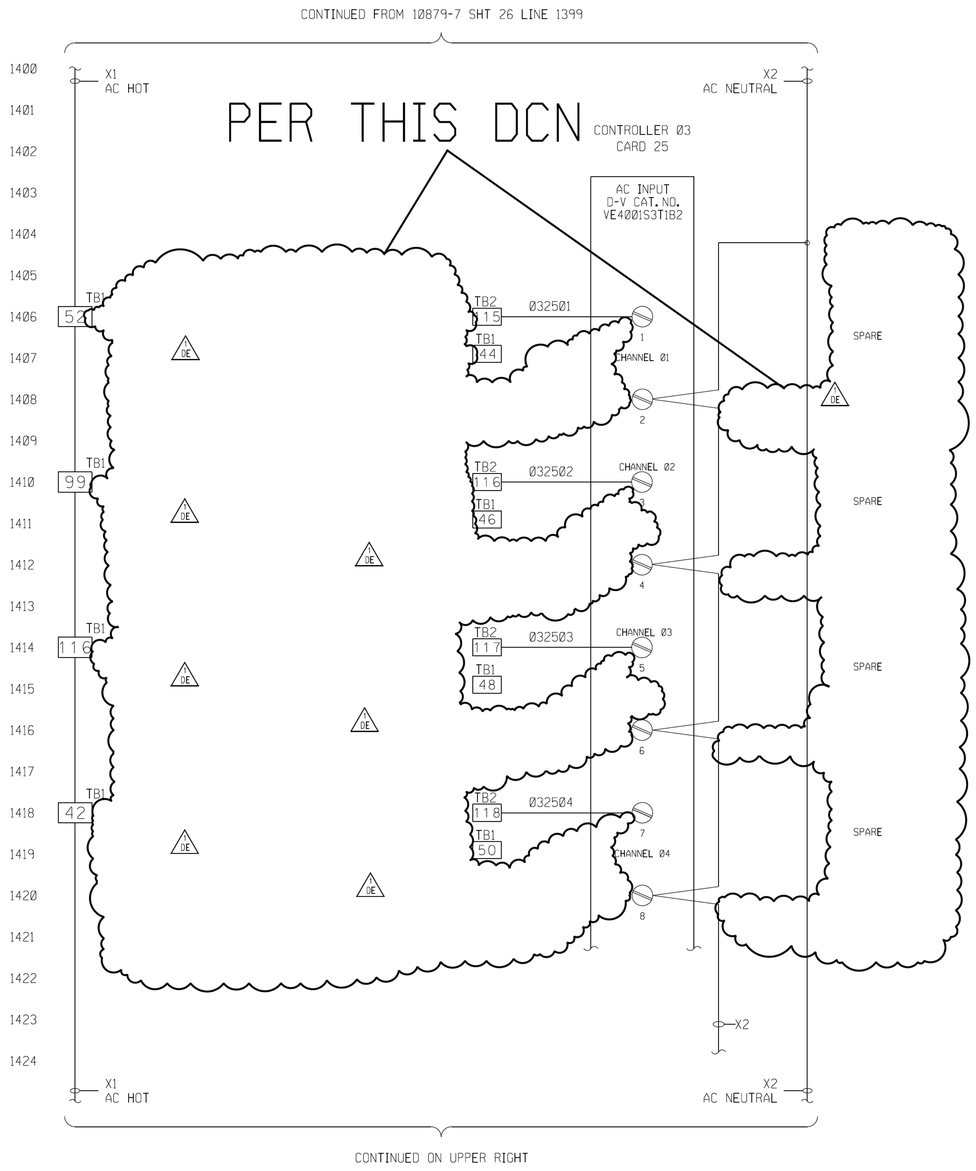

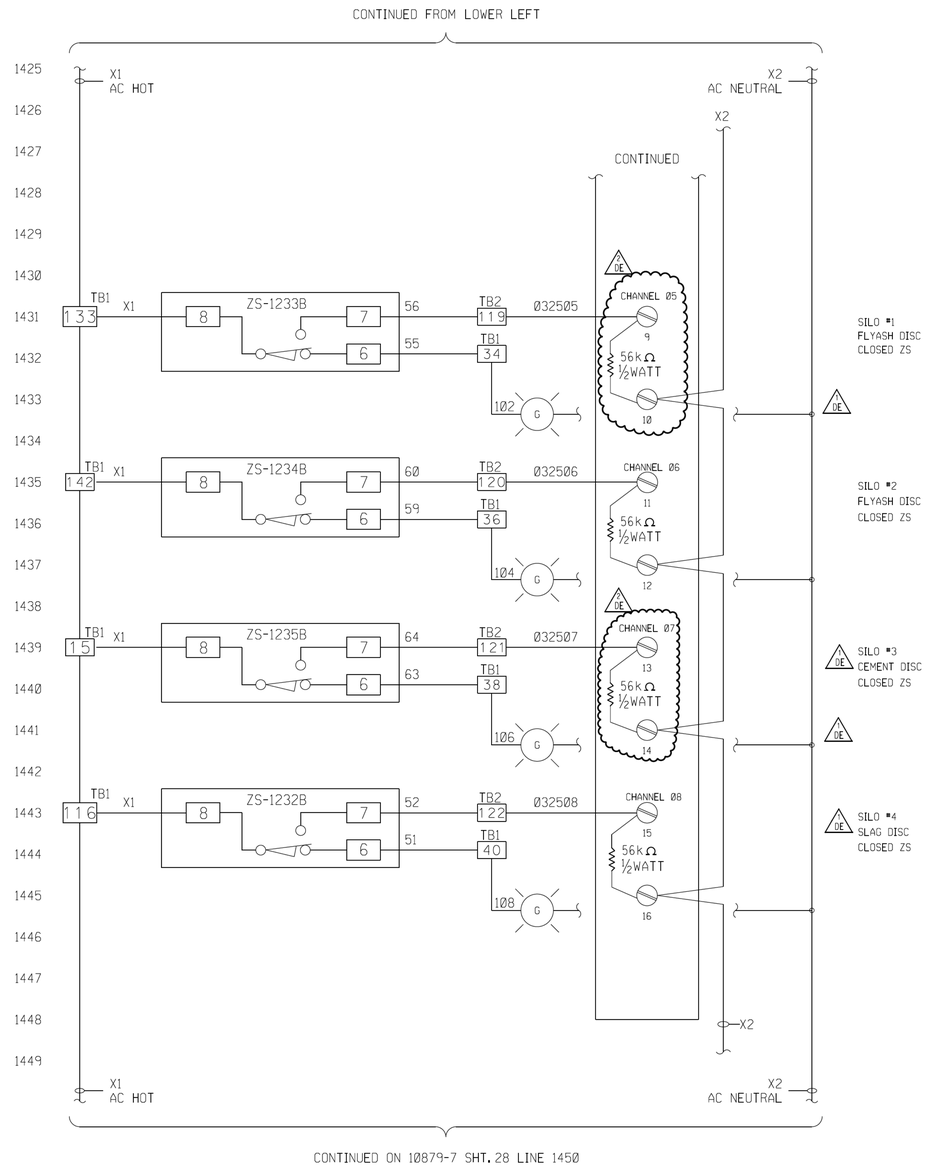

Savannah River Site

Supplier Document Status

- [x] 1. Work May Proceed
- [ ] 2. Submit Final Document-Work May Proceed
- [ ] 3. Revise and Resubmit Work- May Proceed Subject to Resolution of Indicated Comments
- [ ] 4. Revise and Resubmit-Work May Not Proceed
- [ ] 5. Permission to Proceed Not Required

PKG. # 25705

Permission to proceed does not constitute acceptance or approval of design details, calculations, test methods, analysis or materials developed or selected by the supplier, and does not relieve supplier from full compliance with contractual obligations or release of any "holds" placed on the contract.

AC52406A-038-A-NT2

Document Category: 1.4

Date: 1/30/2007

Reviewer: M. SINGH

WSRC Rev No.	Proj. No.	Changes / Comments	Originator / DATE	Checker / DATE	Approver / DATE	WSRC
DE1	N/A	INCORPORATED J-DCF-Z-00303, J-DCF-Z-00401, J-DCF-Z-00408, J-DCF-Z-00410, AND J-DCP-Z-07002 (REF DCN J027).	APPROVALS	MAINTAINED IN DCR/EDMS	MICROFILM 06/30/10	Revisions to Supplier Document
DE2	N/A	INCORPORATED J-DCF-Z-00560, J-DCF-Z-00574, AND J-DCF-Z-00612	APPROVALS	MAINTAINED IN DCR/EDMS	MICROFILM	

REV.	DATE	REVISION NOTE	BY
4			
3			
2			
1	12/29/06	MISC REV	
0	12/11/06	TITLE BLOCK REV	

TITLE: CONTROLLER 03 CARD 25 I/O WIRING-DCS OUTPUTS

U.S. DEPARTMENT OF ENERGY SAVANNAH RIVER SITE

NOLTEC SYSTEMS, INC. MATERIAL CONVEYING AND CONTROL SPECIALISTS LINO LAKES, MN

© 1998, UNPUBLISHED

CATALOG NO.

DRAWN BY: BR DATE: 6/8/06 SCALE:

APP'D BY:

DRAWING NO. 10879-7 SHT. 27 OF 28

AC52406A-38-DE2

LAST CADD REV BY : R.A KING DATE : 06/30/10

Design Change Notice (DCN) Continuation Page

AFTER

DCP No. W-DCP-Z-11003	Revision 1	Document No. AC52406A-38	Revision DE2
DCN No. W-DCP-Z-11003-J-00010	Revision 1	Project Title N/A	Page 5 of 5

Design Change Notice (DCN)

DCP Number	Revision	
M-DCP-Z-11003	1	
DCN No. M-DCP-Z-11003-J-00011	**Revision** 1	**Project/Task No** N/A

Design Change Notice (DCN)

Classification Reviewer: N/A

Date: 05/21/2019

Design Change Notice (DCN)

DCP Number	Revision	
M-DCP-Z-11003	1	
DCN No.	**Revision**	**Project/Task No**
M-DCP-Z-11003-J-00011	1	N/A

Document No. (Doc Rev)
AC52406A-40;DE3

Reason for Change (Be specific)
Provide Upgrade information for Weigh Hopper

Description of Change
Modify Noltec field wiring and piping

Engineering Approvals

Originator	Date	Responsible Engineer Manager	Date
WALKER, DENNIS E.	05/20/2019	SUD, RAJENDRA J.	05/21/2019

Verifier/Checker	Date	Discipline
HEVEL, STEPHEN D.	05/21/2019	J-INSTRUMENTATION AND CONTROLS

Verification Method(s)
Design Check (GS/PS only)

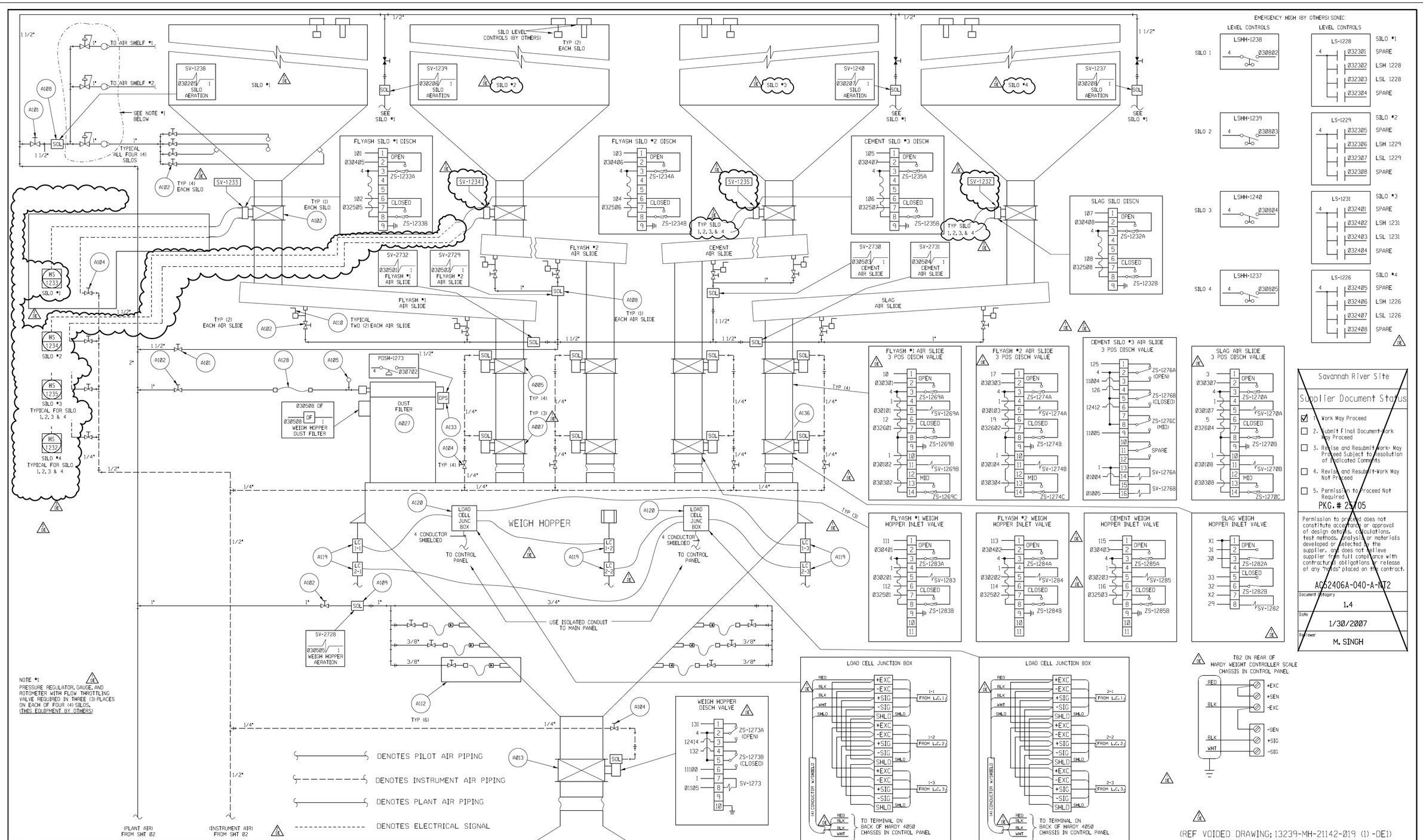

Savannah River Site

Supplier Document Status

- [x] 1. Work May Proceed
- [ ] 2. Submit Final Document-Work May Proceed
- [ ] 3. Revise and Resubmit Work- May Proceed Subject to Resolution of Indicated Comments
- [ ] 4. Revise and Resubmit-Work May Not Proceed
- [ ] 5. Permission to Proceed Not Required

PKG.# 25705

Permission to proceed does not constitute acceptance or approval of design details, calculations, test methods, analysis, or materials developed or selected by the supplier, and does not relieve supplier from full compliance with contractual obligations or release of any "holds" placed on the contract.

AC52406A-040-A-NT2

Document Category: 1.4

Date: 1/30/2007

Reviewer: M. SINGH

SRS Rev No.	Proj. No.	Revisions / Comments	Originator DATE	Checker DATE	Approver DATE	SRS
DE1	N/A	INCORPORATED J-DCF-Z-00398, J-DCF-Z-00398, J-DCF-Z-00401, J-DCF-Z-00612, AND J-DCP-Z-07002 (REF. DCN J018).	APPROVALS MAINTAINED IN DCR EDWS		06/16/14	Revisions to Supplier Document
DE2	N/A	REVISED AS SHOWN (REF. USQ-SS-2016-00140, J-DCP-Z-14005-J-00004 AND J-DCF-Z-002841.	APPROVALS MAINTAINED IN DCR EDWS		08/18/16	
DE3	N/A	INCORPORATED J-DCP-Z-14008 (REF. DCN J-00001), J-DCP-Z-14007 (REF. DCN J-00001), AND (REF. J-DCP-Z-14006-J-00001).	APPROVALS MAINTAINED IN DCR EDWS			

REV	DATE	REVISION NOTE	BY	APP'D BY
5	-			
4	-			
3	1/2/07	MISC REV	BR	
2	12/12/06	REVISED WEIGH SCALE	BR	
1	12/04/06	REDRAWN PER REVISION F	BR	

TITLE: FIELD WIRING & PIPING DIAGRAM

U.S. DEPARTMENT OF ENERGY
SAVANNAH RIVER SITE

NOL-TEC SYSTEMS, INC.
MATERIAL CONVEYING AND CONTROL SPECIALISTS
LAKE ELMO, MN

© 1998, UNPUBLISHED

DRAWING NO. 10879 9 | SHT 1 / 3 | DE

DRAWN BY: BR | DATE: 190CT06 | SCALE: NTS

CATALOG NO.

LAST CADD REV BY : R.A KING DATE : 03/28/18

AC52406A-40-DE3

Design Change Notice (DCN) Continuation Page

BEFORE

DCP No. M-DCP-Z-11003	Revision 1	Document No. AC52406A-40	Revision DE3
DCN No. M-DCP-Z-11003-J-00011	Revision 1	Project/Task No. N/A	Page 3 of 5

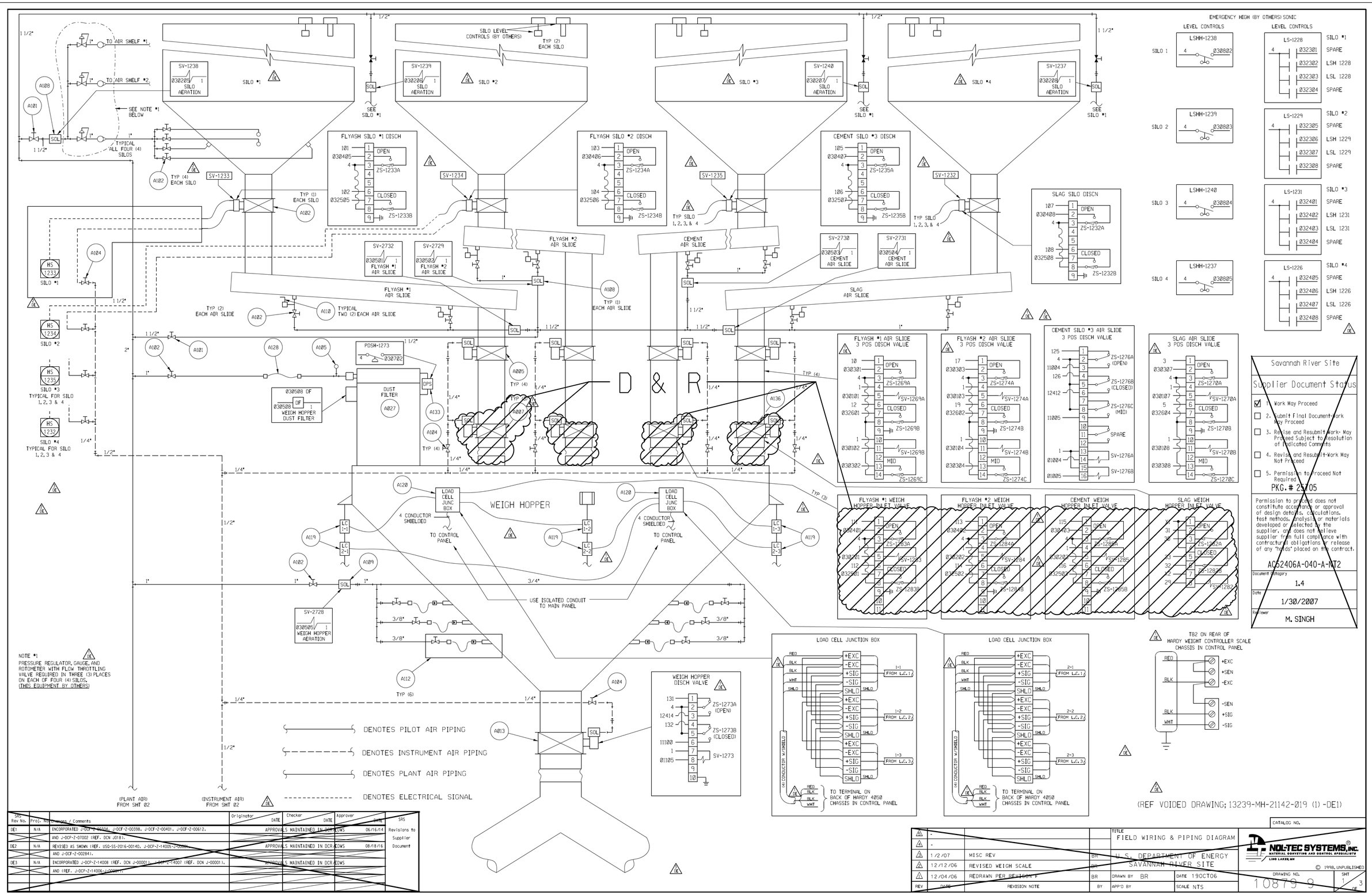

SRS Rev No.	Proj. No.	Purpose / Comments	Originator DATE	Checker DATE	Approver DATE	SRS
DE1	N/A	INCORPORATED J-DCP-Z-00104, J-DCF-Z-00398, J-DCF-Z-00401, J-DCF-Z-00612, AND J-DCP-Z-07002 (REF. DCN J018).	APPROVALS MAINTAINED IN DCR EDWS			06/16/14 Revisions to Supplier Document
DE2	N/A	REVISED AS SHOWN (REF. USQ-SS-2016-00140, J-DCP-Z-14005, J-00004 AND J-DCF-Z-002841.	APPROVALS MAINTAINED IN DCR EDWS			08/18/16
DE3	N/A	INCORPORATED J-DCP-Z-14008 (REF. DCN J-000011), J-DCP-Z-14007 (REF. DCN J-000011), AND (REF. J-DCP-Z-14006, J-000011).	APPROVALS MAINTAINED IN DCR EDWS			

REV	DATE	REVISION NOTE	BY	APP'D BY
5	-			
4	-			
3	1/2/07	MISC REV	BR	
2	12/12/06	REVISED WEIGH SCALE	BR	
1	12/04/06	REDRAWN PER REVISION F	BR	

TITLE: FIELD WIRING & PIPING DIAGRAM

U.S. DEPARTMENT OF ENERGY
SAVANNAH RIVER SITE

NOL-TEC SYSTEMS, INC.
MATERIAL CONVEYING AND CONTROL SPECIALISTS
LAKE ELMO, MN

© 1998, UNPUBLISHED

DRAWN BY: BR | DATE: 19OCT06 | SCALE: NTS

DRAWING NO. 10879 9 | SHT 1 OF 3

CATALOG NO.

LAST CADD REV BY : R.A KING DATE : 03/28/18

AC52406A-40-DE3

Savannah River Site

Supplier Document Status

- [x] 1. Work May Proceed
- [ ] 2. Submit Final Document-Work May Proceed
- [ ] 3. Revise and Resubmit Work- May Proceed Subject to Resolution of Indicated Comments
- [ ] 4. Revise and Resubmit-Work May Not Proceed
- [ ] 5. Permission to Proceed Not Required

PKG.# 25705

Permission to proceed does not constitute acceptance or approval of design details, calculations, test methods, analysis, or materials developed or selected by the supplier, and does not relieve supplier from full compliance with contractual obligations or release of any "holds" placed on the contract.

AC52406A-040-A-NT2

Document Category: 1.4

Date: 1/30/2007

Reviewer: M. SINGH

Design Change Notice (DCN) Continuation Page

D & R

DCP No. M-DCP-Z-11003	Revision 1	Document No. AC52406A-40	Revision DE3
DCN No. M-DCP-Z-11003-J-00011	Revision 1	Project/Task No. N/A	Page 4 of 5

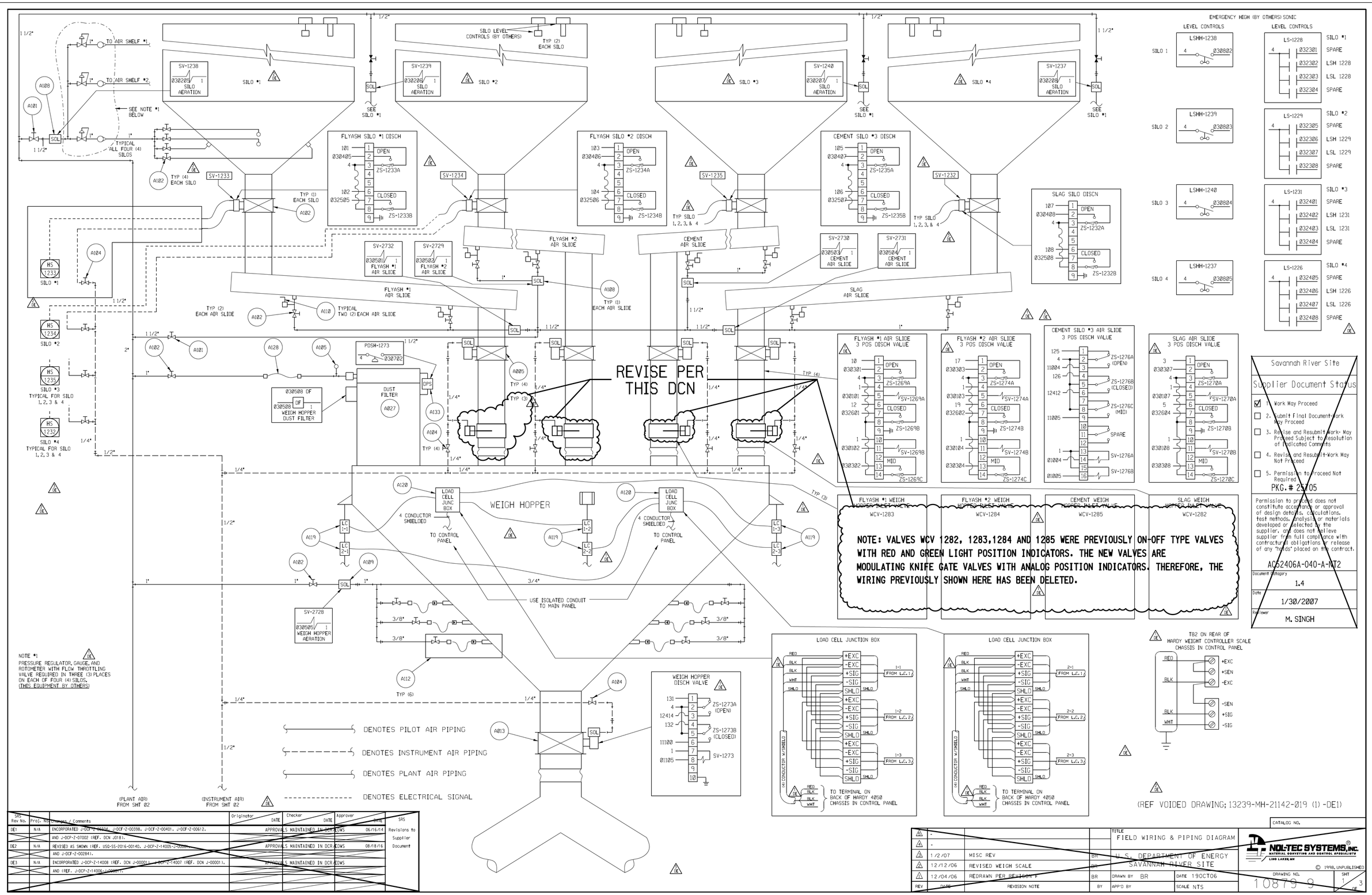

SRS Rev No.	Proj. No.	Revisions / Comments	Originator DATE	Checker DATE	Approver DATE	SRS
DE1	N/A	INCORPORATED J-DCF-Z-00398, J-DCF-Z-00399, J-DCF-Z-00401, J-DCF-Z-00612, AND J-DCP-Z-07002 (REF. DCN J018).	APPROVALS MAINTAINED IN DCR EDWS			06/16/14 Revisions to Supplier Document
DE2	N/A	REVISED AS SHOWN (REF. USQ-SS-2016-00140, J-DCP-Z-14005-J-00004 AND J-DCF-Z-002841.	APPROVALS MAINTAINED IN DCR EDWS			08/18/16
DE3	N/A	INCORPORATED J-DCP-Z-14008 (REF. DCN J-00001), J-DCP-Z-14007 (REF. DCN J-00011), AND (REF. J-DCP-Z-14006-J-00001).	APPROVALS MAINTAINED IN DCR EDWS			

REV	DATE	REVISION NOTE	BY	APP'D BY
5	-			
4	-			
3	1/2/07	MISC REV	BR	
2	12/12/06	REVISED WEIGH SCALE	BR	
1	12/04/06	REDRAWN PER REVISION F	BR	

TITLE: FIELD WIRING & PIPING DIAGRAM
U.S. DEPARTMENT OF ENERGY
SAVANNAH RIVER SITE
DRAWN BY: BR DATE: 19OCT06
SCALE: NTS
NOL-TEC SYSTEMS, INC. MATERIAL CONVEYING AND CONTROL SPECIALISTS LAKE ELMO, MN
© 1998, UNPUBLISHED
DRAWING NO. 10879 9 SHT 1 OF 3 DE

CATALOG NO.

Savannah River Site
Supplier Document Status
- [x] 1. Work May Proceed
- [ ] 2. Submit Final Document-Work May Proceed
- [ ] 3. Revise and Resubmit Work- May Proceed Subject to Resolution of Indicated Comments
- [ ] 4. Revise and Resubmit-Work May Not Proceed
- [ ] 5. Permission to Proceed Not Required

PKG.# 25705

Permission to proceed does not constitute acceptance or approval of design details, calculations, test methods, analysis, or materials developed or selected by the supplier, and does not relieve supplier from full compliance with contractual obligations or release of any "holds" placed on the contract.

AC52406A-040-A-NT2
Document Category: 1.4
Date: 1/30/2007
Reviewer: M. SINGH

LAST CADD REV BY : R.A KING DATE : 03/28/18 AC52406A-40-DE3

AFTER

Design Change Notice (DCN) Continuation Page

DCP No.	Revision	Document No.	Revision	Page
M-DCP-Z-11003	1	AC52406A-40	DE3	5 of 5
DCN No.	Revision	Project/Task No.		
M-DCP-Z-11003-J-00011	1	N/A		

Design Change Notice (DCN)

DCP No.		Revision	
M-DCP-Z-11003		0	
DCN No.	**Revision**	**Project/Task No**	**Document No. (Doc Rev)**
M-DCP-Z-11003-J-00012	0	N/A	AC52406A-27;A

Reason for Change (Be specific)

Provide Upgrade information for Weigh Hopper

Description of Change

Modify Noltec DCS Output card, Add Silo #1 Air Cannon outputs

Engineering Approvals

Originator		Checker/Verifier	Date	Responsible Engineering Manager	Date
VONBECK, HENRY H	8/29/2012	DOSTER, THOMAS DANIEL	8/29/2012	CAMPBELL, MICHAEL W	8/29/2012

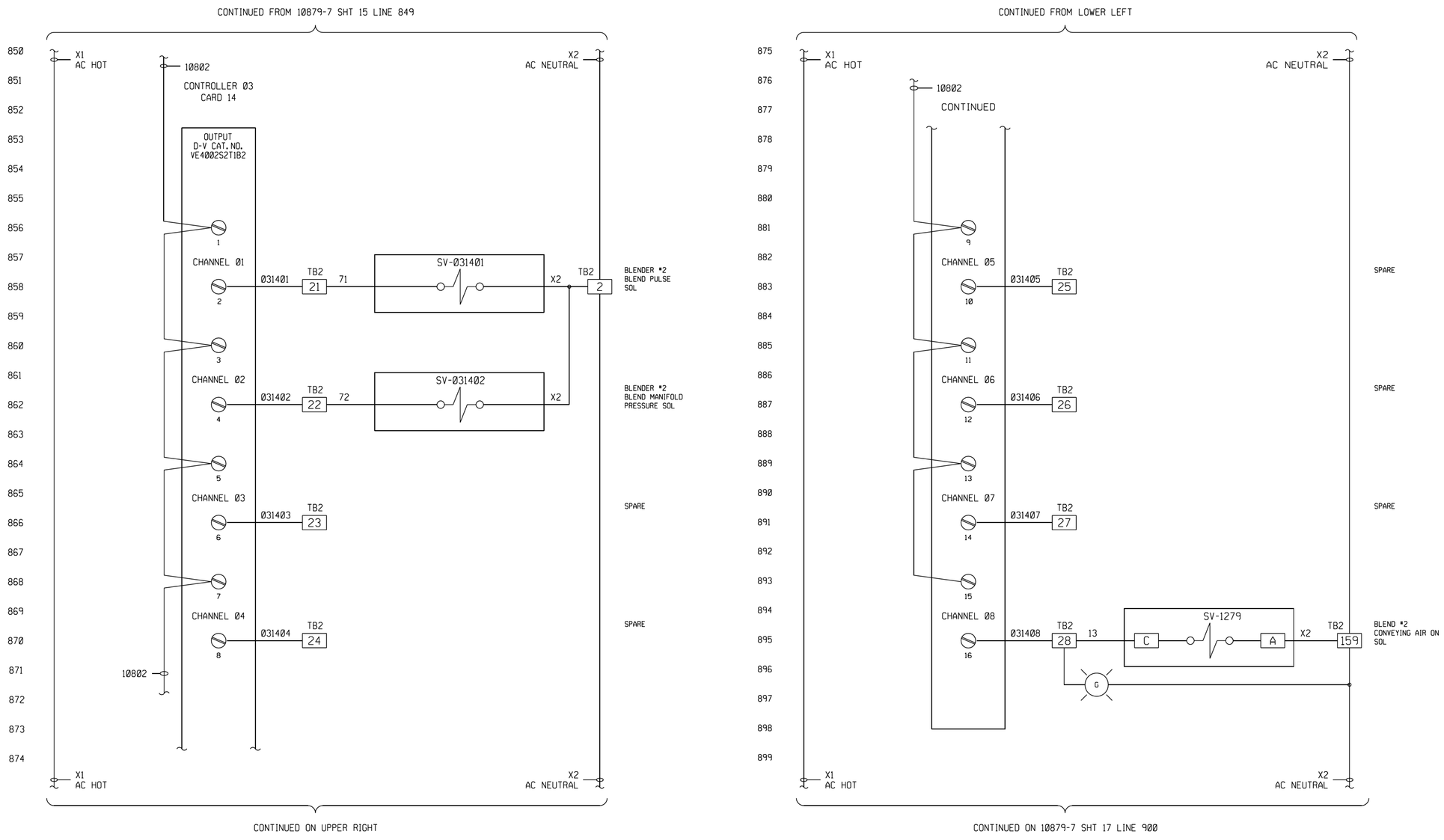

Savannah River Site

Supplier Document Status

- [x] 1. Work May Proceed
- [ ] 2. Submit Final Document-Work May Proceed
- [ ] 3. Revise and Resubmit Work- May Proceed Subject to Resolution of Indicated Comments
- [ ] 4. Revise and Resubmit-Work May Not Proceed
- [ ] 5. Permission to Proceed Not Required

PKG. # 25705

Permission to proceed does not constitute acceptance or approval of design details, calculations, test methods, analysis or materials developed or selected by the supplier, and does not relieve supplier from full compliance with contractural obligations or release of any "holds" placed on the contract.

AC52406A-027-A-NT2

Document Catagory: 1.4

Date: 1/30/2007

Reviewer: M. SINGH

REV	DATE	REVISION NOTE	BY
4	-		
3	-		
2	-		
2	12/29/06	MISC REV	BR
1	12/11/06	TITLE BLOCK REV	BR

TITLE: CONTROLLER 03 CARD 14 I/O WIRING-DCS OUTPUTS

U.S. DEPARTMENT OF ENERGY
SAVANNAH RIVER SITE

DRAWN BY: BR | DATE: 12/4/06 | APP'D BY | SCALE

CATALOG NO.

NOLTEC SYSTEMS, INC.
MATERIAL CONVEYING AND CONTROL SPECIALISTS
LAKE LACHE, MN

© 1998, UNPUBLISHED

DRAWING NO. 10879-7 | SHT 16 OF 28

BEFORE

Design Change Notice (Continued)
DCN

DCP No. M-DCP-Z-11003	Revision 0	Document No. AC52406A-27	Revision A
DCN No. J-00012	Revision 0	Project No. N/A	Page 2 of 4

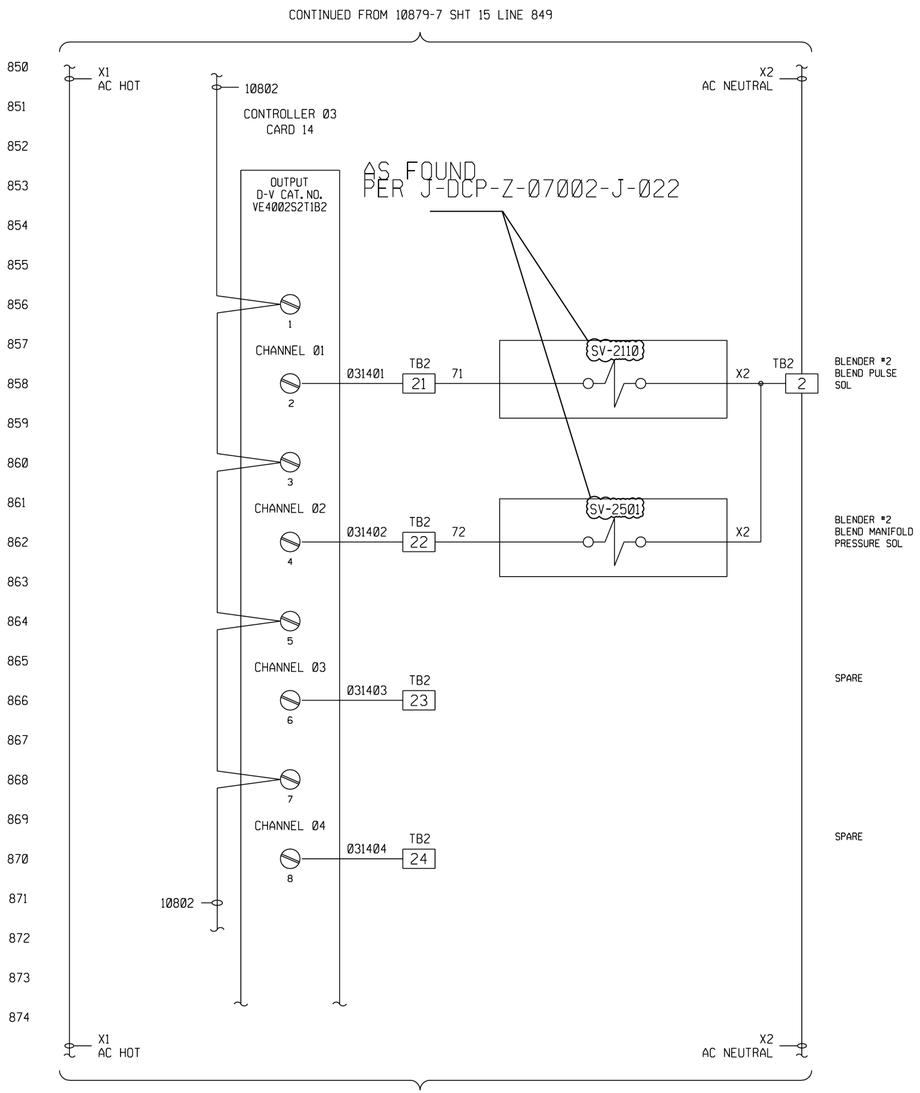

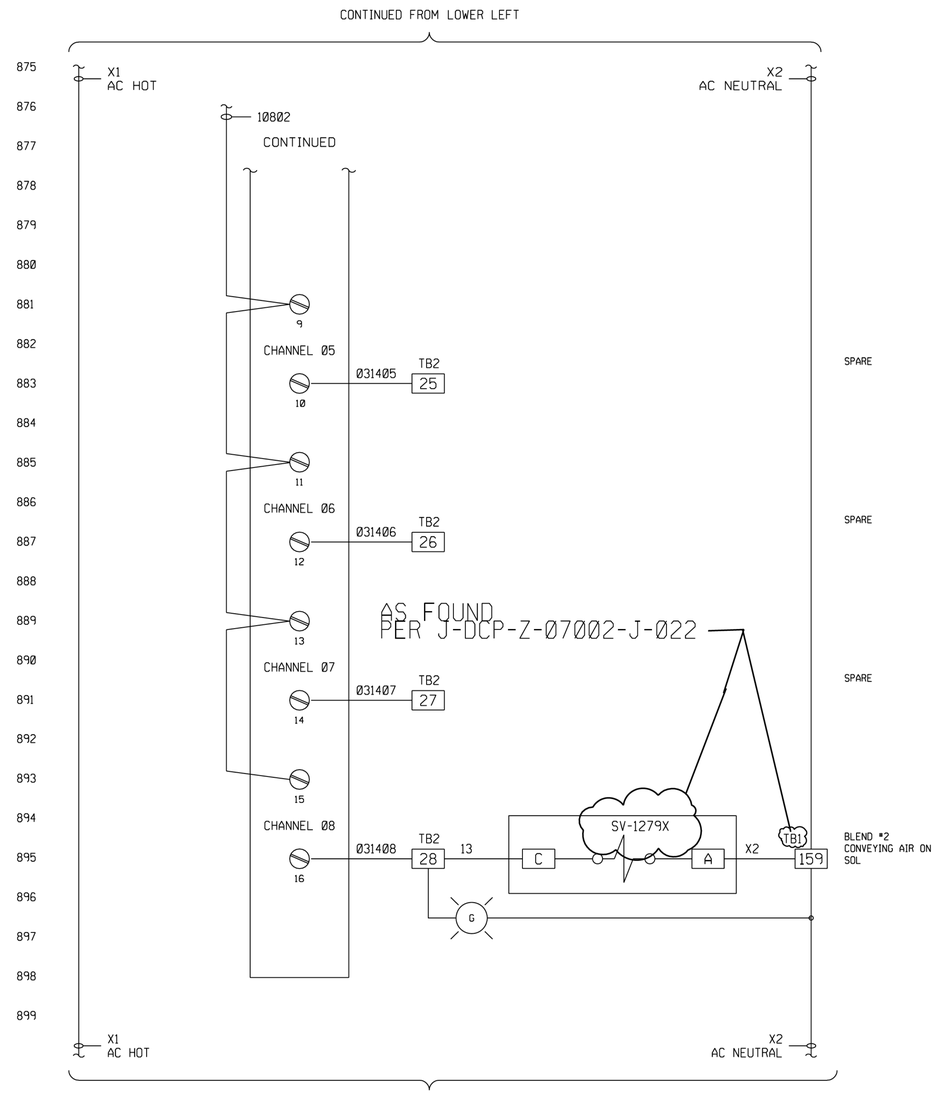

Savannah River Site

Supplier Document Status

- [x] 1. Work May Proceed
- [ ] 2. Submit Final Document-Work May Proceed
- [ ] 3. Revise and Resubmit Work- May Proceed Subject to Resolution of Indicated Comments
- [ ] 4. Revise and Resubmit-Work May Not Proceed
- [ ] 5. Permission to Proceed Not Required

PKG. # 25705

Permission to proceed does not constitute acceptance or approval of design details, calculations, test methods, analysis or materials developed or selected by the supplier, and does not relieve supplier from full compliance with contractural obligations or release of any "holds" placed on the contract.

AC52406A-027-A-NT2

Document Category: 1.4

Date: 1/30/2007

Reviewer: M. SINGH

REV	DATE	REVISION NOTE	BY
4	-		
3	-		
2	-		
1	12/29/06	MISC REV	BR
0	12/11/06	TITLE BLOCK REV	BR

TITLE: CONTROLLER 03 CARD 14 I/O WIRING-DCS OUTPUTS

U.S. DEPARTMENT OF ENERGY
SAVANNAH RIVER SITE

CATALOG NO.

NOL-TEC SYSTEMS, INC.
MATERIAL CONVEYING AND CONTROL SPECIALISTS
LINO LAKES, MN

© 1998, UNPUBLISHED

DRAWN BY: BR | DATE: 12/4/06 | APP'D BY | SCALE

DRAWING NO. 10879-7 | SHT 16 OF 28

AS FOUND

Design Change Notice (Continued)
DCN

DCP No.	M-DCP-Z-11003	Revision	0
DCN No.	J-00012	Revision	0
Document No.	AC52406A-27	Revision	A
Project No.	N/A	Page	3 of 4

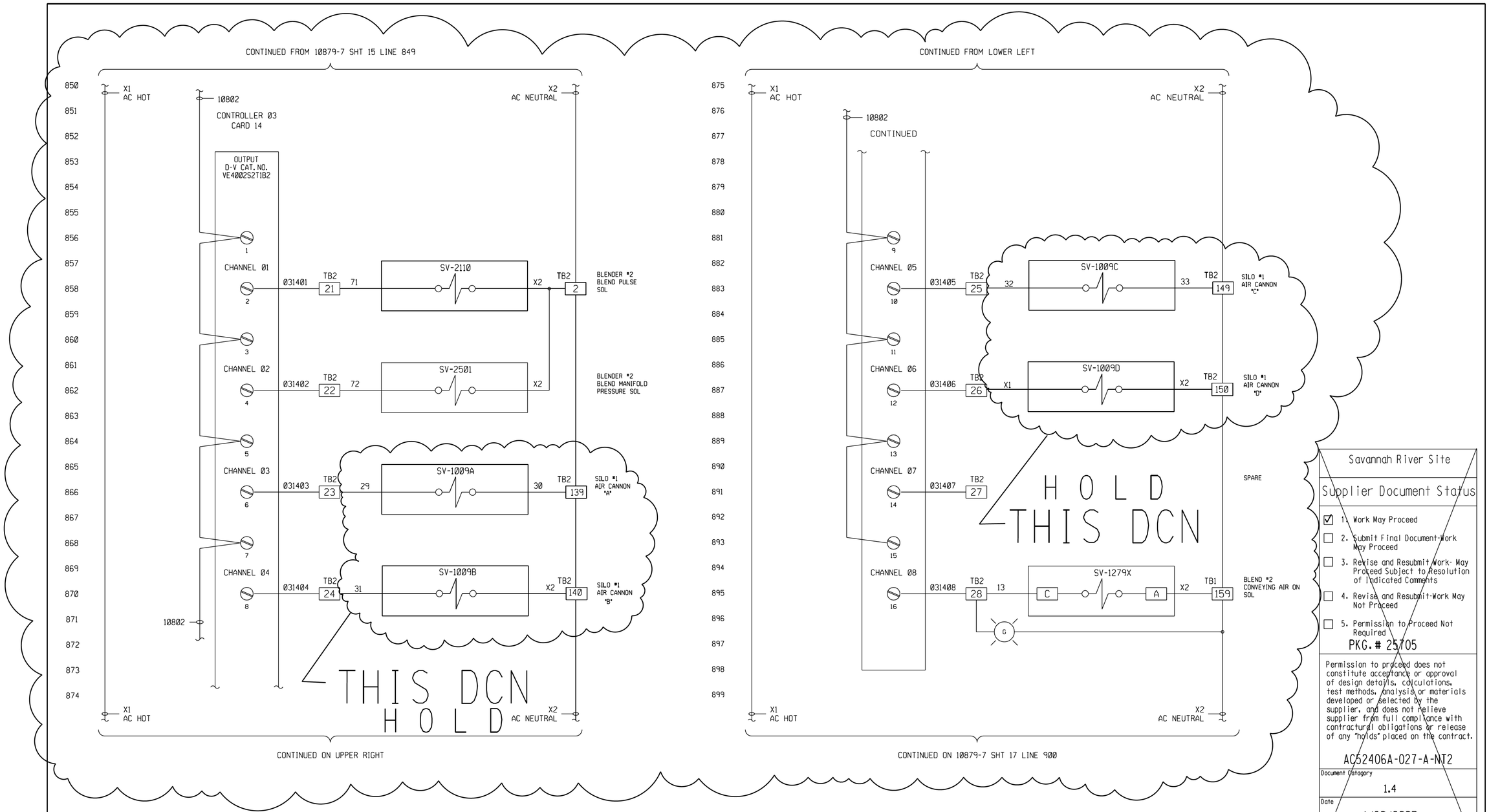

Savannah River Site

Supplier Document Status

- [x] 1. Work May Proceed
- [ ] 2. Submit Final Document-Work May Proceed
- [ ] 3. Revise and Resubmit Work- May Proceed Subject to Resolution of Indicated Comments
- [ ] 4. Revise and Resubmit-Work May Not Proceed
- [ ] 5. Permission to Proceed Not Required

PKG. # 25705

Permission to proceed does not constitute acceptance or approval of design details, calculations, test methods, analysis or materials developed or selected by the supplier, and does not relieve supplier from full compliance with contractual obligations or release of any "holds" placed on the contract.

AC52406A-027-A-NT2

Document Category: 1.4

Date: 1/30/2007

Reviewer: M. SINGH

DO NOT INCORPORATE HOLDS. DESIGN COMPLETE WITH THE EXCEPTION OF DESIGN FROM PROCUREMENTS.

REV	DATE	REVISION NOTE	BY
3	-		
2	-		
1	-		
0	12/29/06	MISC REV	BR
A	12/11/06	TITLE BLOCK REV	BR

TITLE: CONTROLLER 03 CARD 14 I/O WIRING-DCS OUTPUTS

U.S. DEPARTMENT OF ENERGY SAVANNAH RIVER SITE

DRAWN BY: BR | DATE: 12/4/06 | SCALE:

APP'D BY:

CATALOG NO.

NOL-TEC SYSTEMS, INC. INDUSTRIAL COMPUTERS AND CONTROL SPECIALISTS LAKE ZURICH, IL

© 1998, UNPUBLISHED

DRAWING NO. 10879-7 | SHT 16 OF 28

AFTER

Design Change Notice (Continued)
DCN

DCP No. M-DCP-Z-11003	Revision 0	Document No. AC52406A-27	Revision A
DCN No. J-00012	Revision 0	Project No. N/A	Page 4 of 4

Design Change Notice (DCN)

DCP No.		Revision	
M-DCP-Z-11003		0	
DCN No.	**Revision**	**Project/Task No**	**Document No. (Doc Rev)**
M-DCP-Z-11003-J-00013	0	N/A	AC52406A-35;A

Reason for Change (Be specific)

Provide Upgrade information for Weigh Hopper

Description of Change

Modify Noltec DCS Output card, Add Silo #2 & 3 Air Cannon outputs

Engineering Approvals

Originator		Checker/Verifier	Date	Responsible Engineering Manager	Date
VONBECK, HENRY H	8/29/2012	DOSTER, THOMAS DANIEL	8/29/2012	CAMPBELL, MICHAEL W	8/29/2012

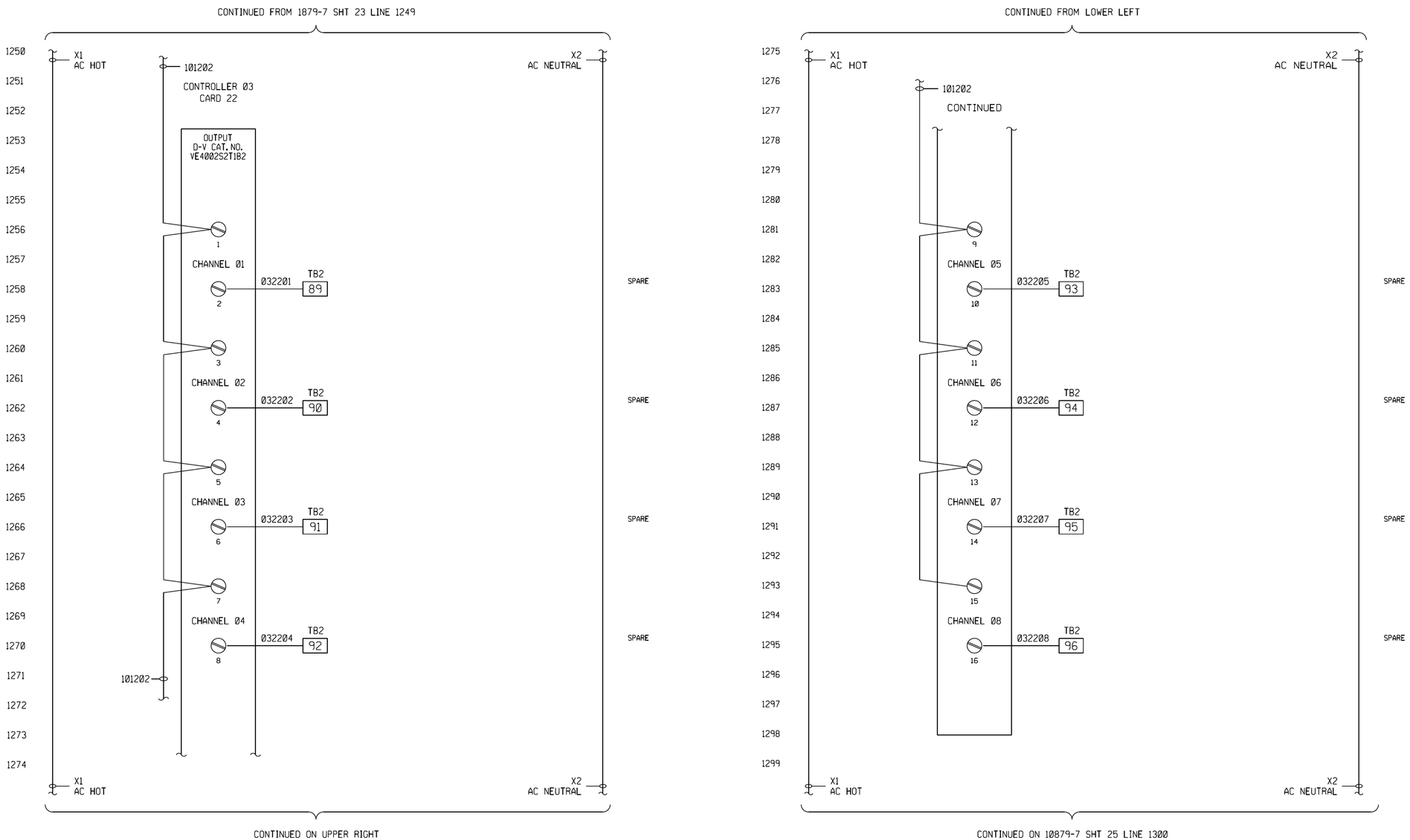

Savannah River Site

Supplier Document Status

- [x] 1. Work May Proceed
- [ ] 2. Submit Final Document-Work May Proceed
- [ ] 3. Revise and Resubmit Work- May Proceed Subject to Resolution of Indicated Comments
- [ ] 4. Revise and Resubmit-Work May Not Proceed
- [ ] 5. Permission to Proceed Not Required

PKG. # 25705

Permission to proceed does not constitute acceptance or approval of design details, calculations, test methods, analysis or materials developed or selected by the supplier, and does not relieve supplier from full compliance with contractural obligations or release of any "holds" placed on the contract.

AC52406A-035-A-NT2

Document Catagory: 1.4

Date: 1/30/2007

Reviewer: M. SINGH

REV	DATE	REVISION NOTE	BY
3	-		
2	-		
1	-		
3	12/29/06	MISC REV	BR
1	12/11/06	TITLE BLOCK REV	BR

TITLE: CONTROLLER 03 CARD 22 I/O WIRING-DCS OUTPUTS

U.S. DEPARTMENT OF ENERGY SAVANNAH RIVER SITE

CATALOG NO.

NOL-TEC SYSTEMS, INC. MATERIAL HANDLING AND CONTROL SPECIALISTS LAND LAKES, WI

© 1998, UNPUBLISHED

DRAWN BY: BR | DATE: 12/4/06

APP'D BY | SCALE

DRAWING NO. 10879-7 | SHT 24 OF 28

Design Change Notice (Continued)
DCN

BEFORE

DCP No. M-DCP-Z-11003	Revision 0	Document No. AC52406A-35	Revision A
DCN No. J-00013	Revision 0	Project No. N/A	Page 2 of 3

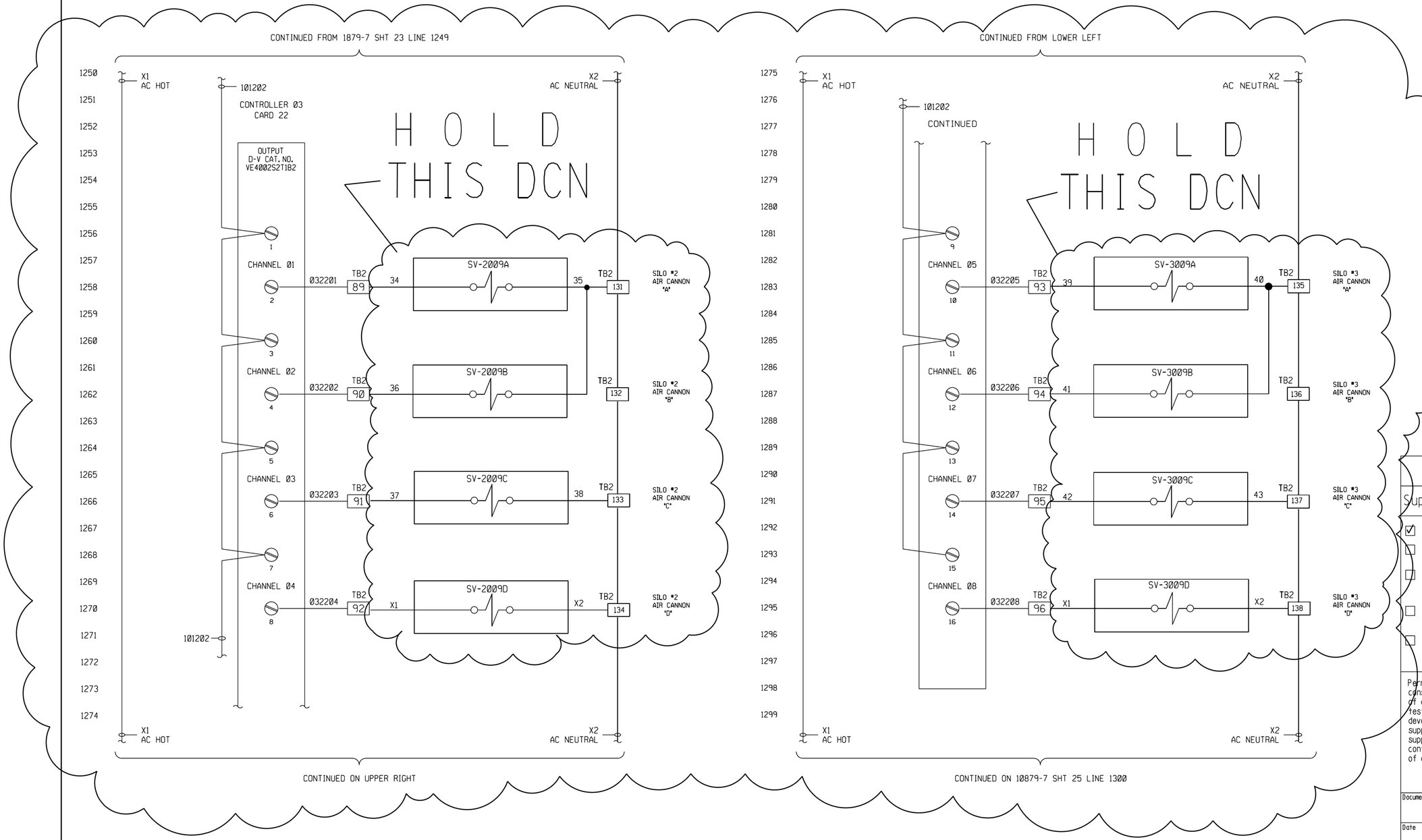

DO NOT INCORPORATE HOLDS. DESIGN COMPLETE WITH THE EXCEPTION OF DESIGN FROM PROCUREMENTS.

Savannah River Site

Supplier Document Status

- [x] 1. Work May Proceed
- [ ] 2. Submit Final Document-Work May Proceed
- [ ] 3. Revise and Resubmit Work- May Proceed Subject to Resolution of Indicated Comments
- [ ] 4. Revise and Resubmit-Work May Not Proceed
- [ ] 5. Permission to Proceed Not Required

PKG. # 25705

Permission to proceed does not constitute acceptance or approval of design details, calculations, test methods, analysis or materials developed or selected by the supplier, and does not relieve supplier from full compliance with contractural obligations or release of any "holds" placed on the contract.

AC52406A-035-A-NT2

Document Catagory: 1.4

Date: 1/30/2007

Reviewer: M. SINGH

REV	DATE	REVISION NOTE	BY
4	-		
3	-		
2	-		
2	12/29/06	MISC REV	BR
1	12/11/06	TITLE BLOCK REV	BR

TITLE: CONTROLLER 03 CARD 22 I/O WIRING-DCS OUTPUTS

U.S. DEPARTMENT OF ENERGY SAVANNAH RIVER SITE

DRAWN BY: BR DATE: 12/4/06

APP'D BY: SCALE:

CATALOG NO.

NOL-TEC SYSTEMS, INC. MATERIAL CONVEYING AND CONTROL SPECIALISTS LAND LAKES, WI

© 1998, UNPUBLISHED

DRAWING NO. 10879-7 SHT 24 OF 28

AFTER

Design Change Notice (Continued)
DCN

DCP No. M-DCP-Z-111003	Revision 0	Document No. AC52406A-35	Revision A
DCN No. J-00013	Revision 0	Project No. N/A	Page 3 of 3

Design Change Notice (DCN)

DCP Number	Revision	
M-DCP-Z-11003	1	
DCN No. M-DCP-Z-11003-J-00014	**Revision** 1	**Project/Task No** N/A

Design Change Notice (DCN)

Classification Reviewer: N/A

Date: 05/21/2019

Design Change Notice (DCN)

DCP Number	Revision	
M-DCP-Z-11003	1	
DCN No.	**Revision**	**Project/Task No**
M-DCP-Z-11003-J-00014	1	N/A

Document No. (Doc Rev)
AC52406A-12;DE1

Reason for Change (Be specific)
Provide Upgrade information for Weigh Hopper

Description of Change
Show 24 VDC takeoff for analog module field power from DC Power Supply 134DCPS

Engineering Approvals

Originator	Date	Responsible Engineer Manager	Date
WALKER, DENNIS E.	05/20/2019	SUD, RAJENDRA J.	05/21/2019

Verifier/Checker	Date	Discipline
HEVEL, STEPHEN D.	05/21/2019	J-INSTRUMENTATION AND CONTROLS

Verification Method(s)
Design Check (GS/PS only)

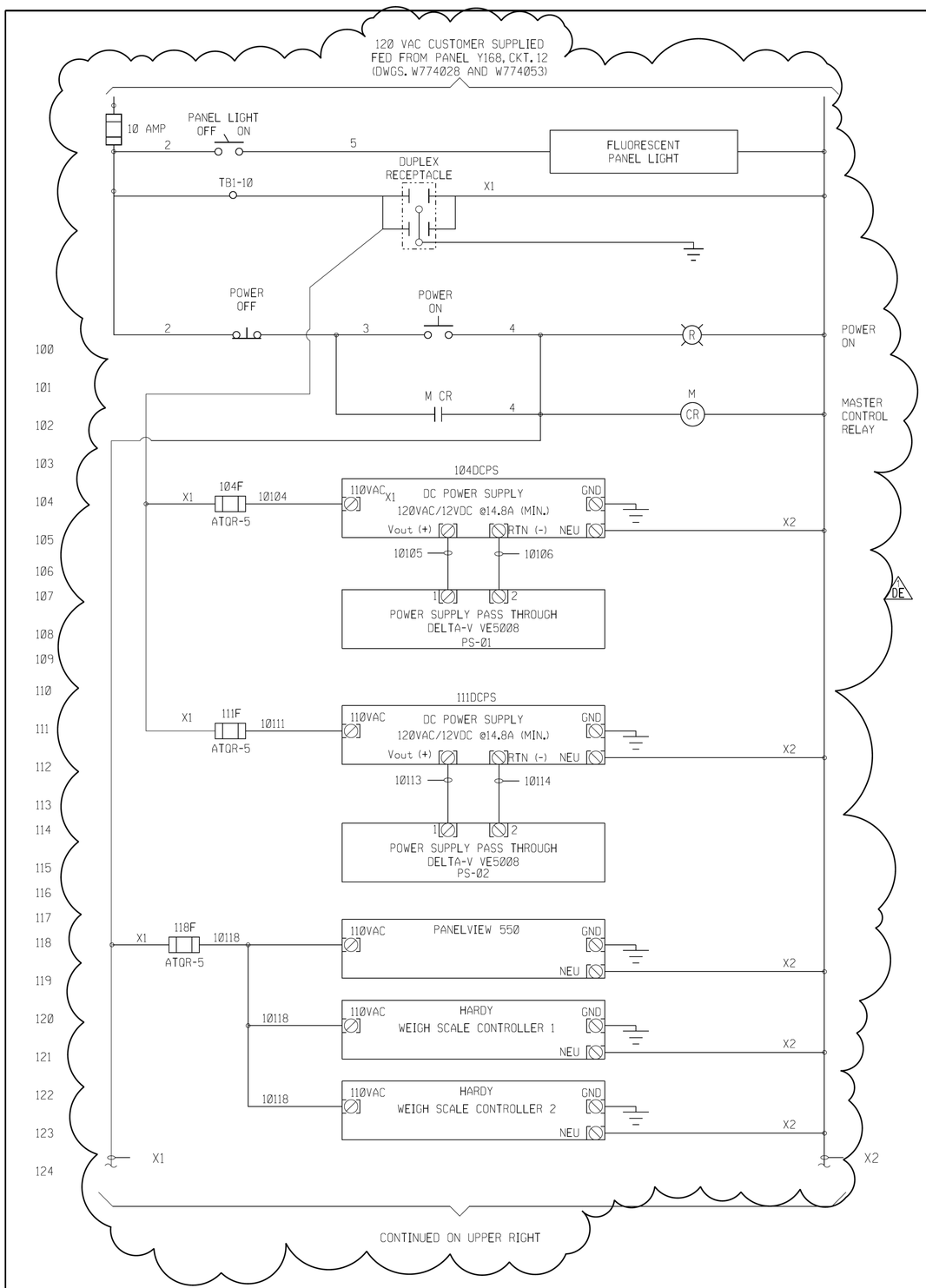

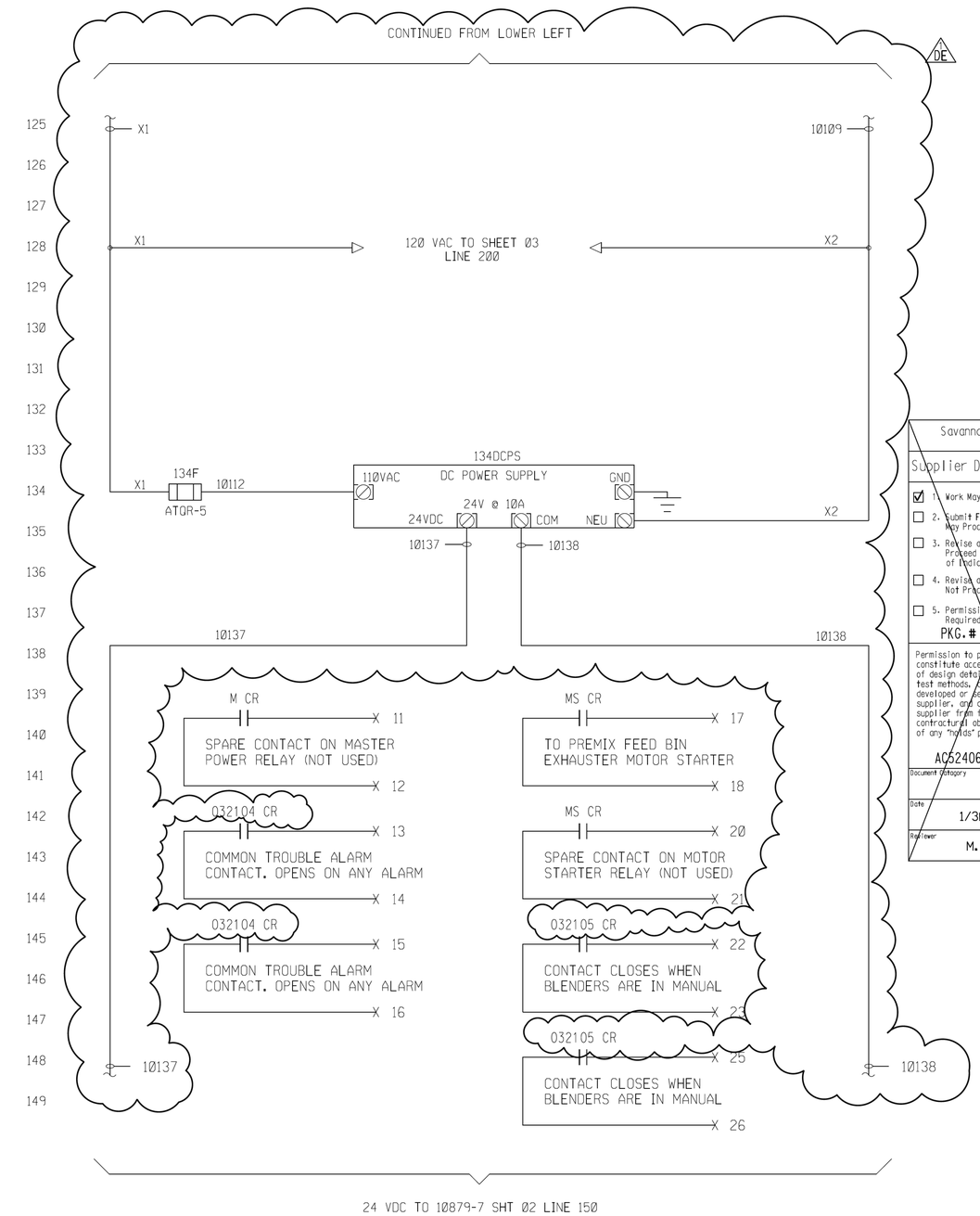

Savannah River Site

Supplier Document Status

- [x] 1. Work May Proceed
- [ ] 2. Submit Final Document-Work May Proceed
- [ ] 3. Revise and Resubmit Work- May Proceed Subject to Resolution of Indicated Comments
- [ ] 4. Revise and Resubmit-Work May Not Proceed
- [ ] 5. Permission to Proceed Not Required

PKG.# 25705

Permission to proceed does not constitute acceptance or approval of design details, calculations, test methods, analysis or materials developed or selected by the supplier, and does not relieve supplier from full compliance with contractual obligations or release of any "holds" placed on the contract.

AC52406A-012-A-NT2

Document Category: 1.4

Date: 1/30/2007

Reviewer: M. SINGH

SRS Rev. No.	Proj No.	Changes/Comments	Orig / Date	Checker / Date	Approver / Date
DE1	N/A	INCORPORATED J-OCF-Z-00398, J-OCF-Z-070402-J-035, AND E-OCF-Z-00416	APPROVALS MAINTAINED IN DCS/EDMS		

SRS Revision To Supplier Document

REV	DATE	REVISION NOTE	BY	APP'D BY
3				
2				
1				
2	1/2/07	MISC REV	JAP	
1	12/11/06	TITLE BLOCK REV	BR	BR

TITLE: CONTROLLER WIRING

U.S. DEPARTMENT OF ENERGY
SAVANNAH RIVER SITE

NOL-TEC SYSTEMS, INC.
MATERIAL CONVEYING AND CONTROL SPECIALISTS
LINO LAKES, MN

CATALOG NO.

DRAWN BY: BR DATE: 12/4/06

SCALE

DRAWING NO. 10879-7

SHT 01 OF 28

© 1998, UNPUBLISHED

Design Change Notice (DCN)
Continuation Page

BEFORE

ECF No.	N-OCF-Z-11003	Revision: 1	Document No. AC52406A-12
DCN No.	N-OCF-Z-11003-J-00014	Revision: 1	Proposal Use N/A

Revision: DE1 Page 3 of 4

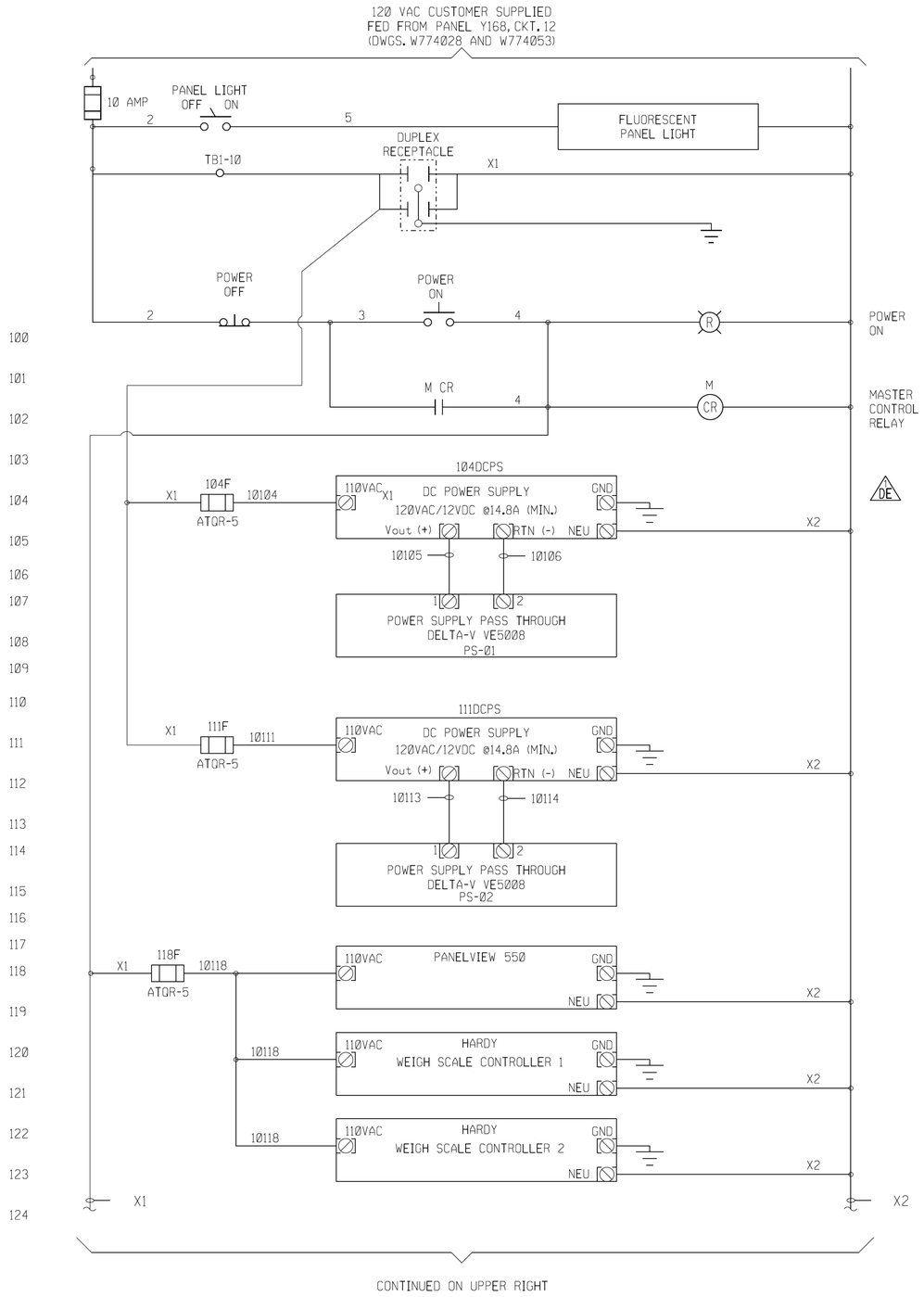

CONTINUED ON UPPER RIGHT

CONTINUED FROM LOWER LEFT

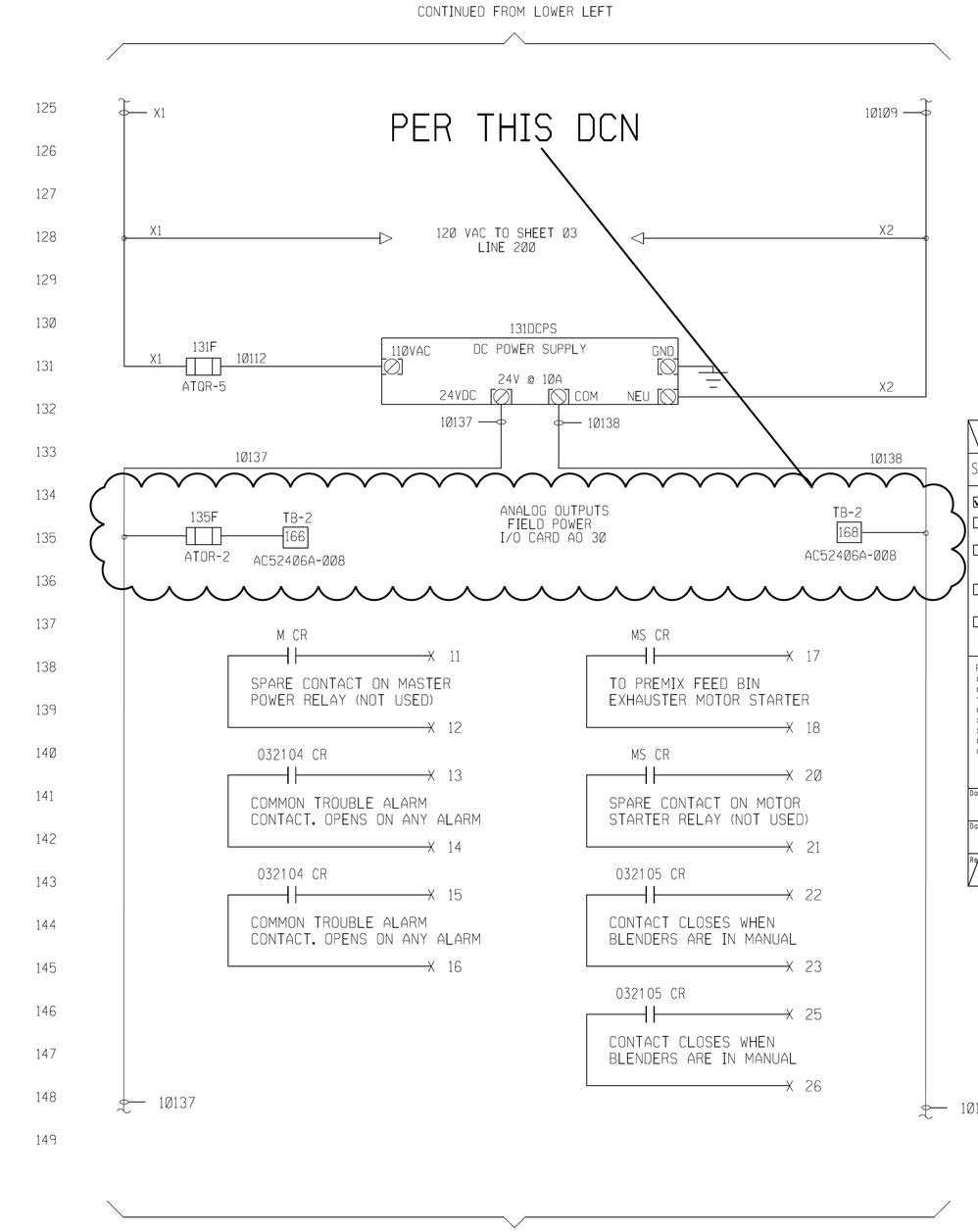

24 VDC TO 10879-7 SHT 02 LINE 150

Savannah River Site

Supplier Document Status

- [x] 1. Work May Proceed
- [ ] 2. Submit Final Document-Work May Proceed
- [ ] 3. Revise and Resubmit Work- May Proceed Subject to Resolution of Indicated Comments
- [ ] 4. Revise and Resubmit-Work May Not Proceed
- [ ] 5. Permission to Proceed Not Required

PKG.# 25705

Permission to proceed does not constitute acceptance or approval of design details, calculations, test methods, analysis or materials developed or selected by the supplier, and does not relieve supplier from full compliance with contractual obligations or release of any "holds" placed on the contract.

AC52406A-012-A-NT2

Document Category: 1.4

Date: 1/30/2007

Reviewer: M. SINGH

SRS Rev. No.	Proj No.	Changes/Comments	Orig Date	Checker Date	Approver Date
DE1	N/A	INCORPORATED J-DCF-Z-00398, J-DCF-Z-01002-J-035, AND E-DCF-Z-00416	APPROVALS MAINTAINED IN DCS/EDMS		

SRS Revision To Supplier Document

REV	DATE	REVISION NOTE	BY
3			
3			
3			
3	1/2/07	MISC REV	JAP
1	12/11/06	TITLE BLOCK REV	BR

TITLE: CONTROLLER WIRING

U.S. DEPARTMENT OF ENERGY
SAVANNAH RIVER SITE

NOLTEC SYSTEMS, INC.
MATERIAL CONVEYING AND CONTROL SPECIALISTS
LINO LAKES, MN

CATALOG NO.

DRAWN BY: BR | DATE: 12/4/06 | APP'D BY | SCALE

© 1998, UNPUBLISHED

DRAWING NO. 10879-7 | SHT 01 OF 28

AFTER

Design Change Notice (DCN)
Continuation Page

DCF No. W-DCF-Z-11003	Revision 1	Document No. AC52406A-12	Revision DE1
DCN No. W-DCF-Z-11003-J-00014	Revision 1	Project Data N/A	Page 4 of 4

Design Change Notice (DCN)

DCP Number	Revision	
M-DCP-Z-11003	1	
DCN No. M-DCP-Z-11003-J-00016	**Revision** 1	**Project/Task No** N/A

Design Change Notice (DCN)

Classification Reviewer: N/A

Date: 05/21/2019

Design Change Notice (DCN)

DCP Number	Revision
M-DCP-Z-11003	1

DCN No.	Revision	Project/Task No
M-DCP-Z-11003-J-00016	1	N/A

Document No. (Doc Rev)
D193700;6

Reason for Change (Be specific)
Provide Upgrade information for Weigh Hopper

Description of Change
REMOVE LOOP L-1231 FROM DRAWING, LOOP RELOCATED TO SEGMENT DRAWING

Engineering Approvals

Originator	Date	Responsible Engineer Manager	Date
WALKER, DENNIS E.	05/20/2019	SUD, RAJENDRA J.	05/21/2019

Verifier/Checker	Date	Discipline
HEVEL, STEPHEN D.	05/21/2019	J-INSTRUMENTATION AND CONTROLS

Verification Method(s)
Design Check (GS/PS only)

SRP DRAWING NO. D193700

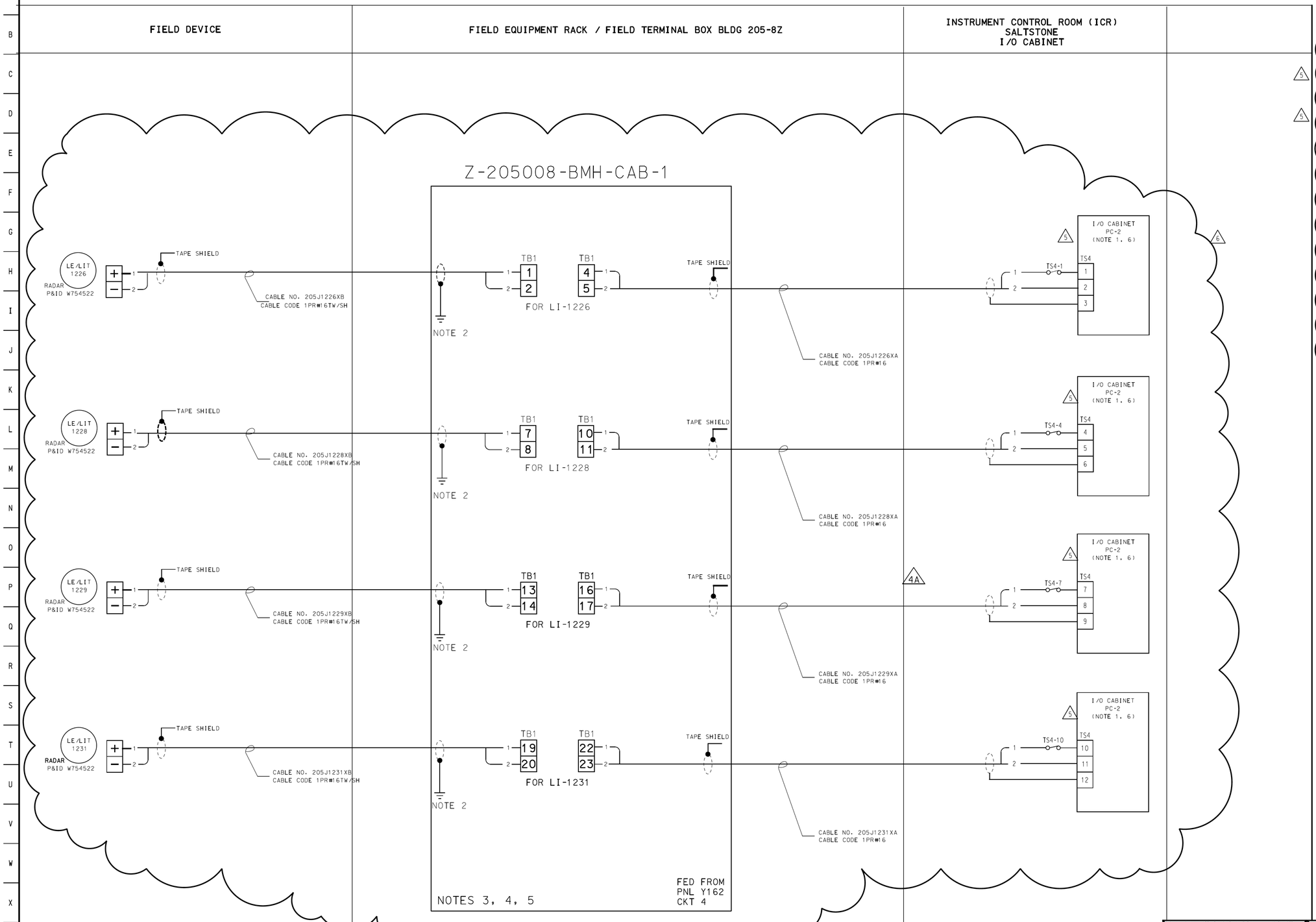

NOTES

1. FOR DELTA V DCS I/O MODULE IDENTIFICATION AND TERMINAL NUMBERS SEE J-JQ-Z-0001 THROUGH J-JQ-Z-0004 (PC-1 THROUGH PC-4A & 4B). .
2. SHIELD TO BE GROUNDED ON INSTRUMENT HOUSING.
3. LOCAL INDICATOR MODEL NO. SEE J-JD-Z-00033. LEVEL TRANSMITTER MODEL NO. SEE J-JD-Z-00033.
4. SEE DRAWING W774029 FOR REMAINING WIRING TO LEVEL INDICATOR ENCLOSURE.
5. SEE DRAWING AC47575A-001 FOR INTERNAL WIRING OF CAB-1.
6. PRIMARY WIRE NUMBERS AT THE PC CABINET FIELD END ARE AS SHOWN IN THE LOOP DIAGRAM. THESE FIELD LABELS ARE TYPICALLY FOUND INSIDE THE PC CABINET RACEWAY.

   SECONDARY LABELS ARE LOCATED ON THE FIELD WIRES AT THE PC CABINETS TERMINATION STRIPS AND ARE LABELED AS THE EPN (EQUIPMENT NUMBER) TAG WITH A SUFFIX OF "-1" OR "-2".

   TYPICAL PC FIELD WIRING LABELS ARE AS FOLLOWS:

   ANALOG INPUT MODULE:

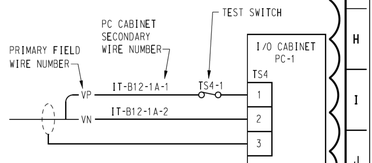

Bechtel is responsible for the original design contained on this drawing, however, changes incorporated on this drawing to reflect As-built conditions have not been verified by Bechtel National, Inc.

APPLICABLE DA'S			
	Z205	Z375	

J J4 Z 0013 — LATEST REVISION 6

PROJ.	REV. NO.	DATE	REVISION	PRP'D	LEAD ENG	CHK'D	APRV'D	APRV'D	APRV'D
W899	5	04/29/08	SEE MICROFILM FOR PREVIOUS REVISIONS - INCORP. J-DCP-Z-02001 (REF. DCN J-009)		SIGNATURES ON MICROFILM				
N/A	6	07/27/11	INCORP E-DCF-Z-00019 & M-DCP-Z-05006 (REF. DCN J-007) AND ADDED PC-2 TERMINALS. (REF. TTR# HLW-SSF-2006-0007)		APPROVALS MAINTAINED IN DCR/DWS/MICROFILM				

THIS DRAWING HAS BEEN FURNISHED BY THE SAVANNAH RIVER SITE. THE INFORMATION AND KNOW HOW THEREON MAY NOT BE USED NOR THE DRAWING REPRODUCED WITHOUT WRITTEN PERMISSION OF THE PRIME CONTRACTOR. ALL REPRODUCTIONS IN WHOLE OR IN PART, INCLUDING VENDORS SHOP DRAWINGS, SHALL BEAR OR REFER TO THIS STATEMENT.

REFERENCE DRAWINGS

W754522	P&ID
J-JQ-Z-0002	I/O CABINET #2
W774054	POWER PANEL SCHEDULES
W774029	SCHEMATIC DIAGRAM

REFERENCE STANDARDS

UNITED STATES DEPARTMENT OF ENERGY

SAVANNAH RIVER SITE

BLDG. NO.	SITE CLEARANCE NO.	DESIGN AREA NO.	DESIGN GROUP
210Z	N/A	N/A	N/A

TITLE

SAVANNAH RIVER PLANT - 200Z AREA
DEFENSE WASTE PROCESSING FACILITY-SALTSTONE
ICR: LE/LIT-1226
LE/LIT-1228, LE/LIT-1229 & LE/LIT-1231
INSTRUMENT LOOP DIAGRAM
E&I CONTROL SYSTEMS
(U)

SCALE	SRP DRAWING NO.	SHEET NO.	LATEST REVISION
NONE	D193700	1 OF 1	6

W.S. # REF FILES YES NO

LEVELS 1234567890123456789012345678901234567890123456789012345678901234567890123456789012345678901234567890123

PSC= PLOT DATE 11-9-06 TIME 0943 DRAWN BY (ORIG): LAST CADD REV. BY: M ARORA DATE: 01-25-11

Scale shown on this drawing is only applicable when plotted at 30"x42" (actual drawing size)

BEFORE

Design Change Notice (DCN)
Continuation Page

DCP No. M-DCP-Z-11003	Revision 1	Document No. D193700	Revision 6
DCN No. M-DCP-Z-11003-J-00016	Revision 1	Project/Task No. N/A	Page 3 of 4

SWP DRAWING NO. D193700

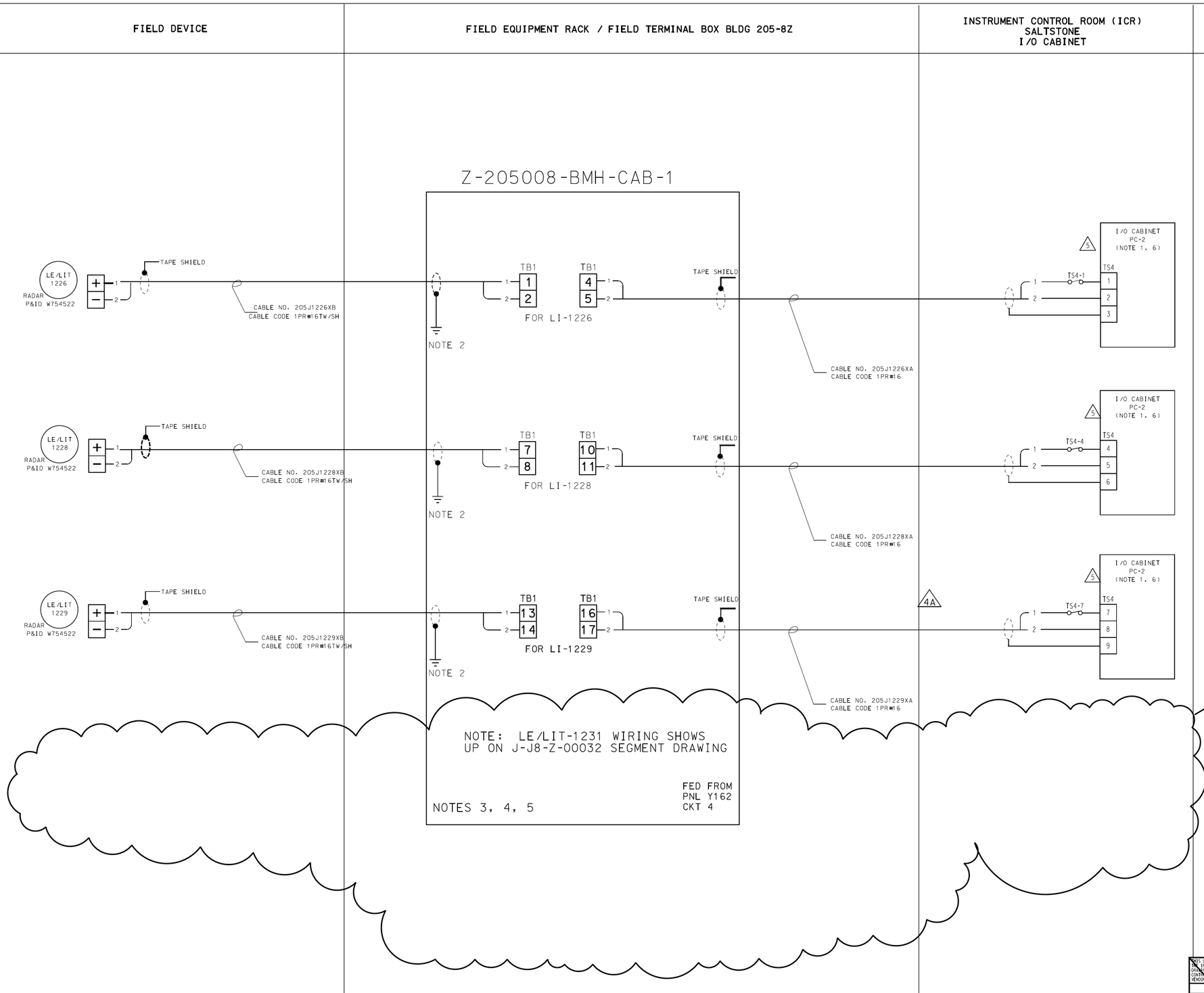

PER THIS DCN

NOTES

1. FOR DELTA V DCS I/O MODULE IDENTIFICATION AND TERMINAL NUMBERS SEE J-JQ-Z-0001 THROUGH J-JQ-Z-0004 (PC-1 THROUGH PC-4A & 4B). .
2. SHIELD TO BE GROUNDED ON INSTRUMENT HOUSING.
3. LOCAL INDICATOR MODEL NO. SEE J-JD-Z-00033. LEVEL TRANSMITTER MODEL NO. SEE J-JD-Z-00033.
4. SEE DRAWING W774029 FOR REMAINING WIRING TO LEVEL INDICATOR ENCLOSURE.
5. SEE DRAWING AC47575A-001 FOR INTERNAL WIRING OF CAB-1.
6. PRIMARY WIRE NUMBERS AT THE PC CABINET FIELD END ARE AS SHOWN IN THE LOOP DIAGRAM. THESE FIELD LABELS ARE TYPICALLY FOUND INSIDE THE PC CABINET RACEWAY.

   SECONDARY LABELS ARE LOCATED ON THE FIELD WIRES AT THE PC CABINETS TERMINATION STRIPS AND ARE LABELED AS THE EPN (EQUIPMENT NUMBER) TAG WITH A SUFFIX OF "-1" OR "-2".

   TYPICAL PC FIELD WIRING LABELS ARE AS FOLLOWS:

   ANALOG INPUT MODULE:

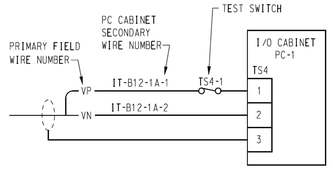

Bechtel is responsible for the original design contained on this drawing, however, changes incorporated on this drawing to reflect As-built conditions have not been verified by Bechtel National, Inc.

APPLICABLE DA'S			
	Z205	Z375	

J J4 Z 0013 6 (LATEST REVISION)

PROJ.	REV. NO.	DATE	REVISION	PRP'D	LEAD ENG	CHK'D	APRV'D	APRV'D	APRV'D
W899	5	04/29/01	SEE MICROFILM FOR PREVIOUS REVISIONS - INCORP. J-DCP-Z-02001 (REF. DCN J-009)		SIGNATURES ON MICROFILM				
N/A	6	07/27/11	INCORP E-DCF-Z-00016 & M-DCP-Z-05006 (REF. DCN J-007) AND ADDED PC-2 TERMINALS. (REF. TTR# HLT-SF-2006-0007)		APPROVALS MAINTAINED IN DCR/DWS/MICROFILM				

THIS DRAWING WAS BEEN FURNISHED BY THE SAVANNAH RIVER SITE. THE INFORMATION AND KNOW HOW THEREON MAY NOT BE USED FOR THE DRAWING REPRODUCED WITHOUT WRITTEN PERMISSION OF THE SITE CONTRACTOR. ALL REPRODUCTIONS IN WHOLE OR IN PART, INCLUDING VENDOR SHOP DRAWINGS, SHALL BEAR OR REFER TO THIS STATEMENT.

REFERENCE DRAWINGS

W754522	P&ID
J-JQ-Z-0002	I/O CABINET #2
W774054	POWER PANEL SCHEDULE
W774029	SALTSTONE DYNAMIC
J-J8-Z-00032	SEGMENT DRAWING

REFERENCE STANDARDS

UNITED STATES DEPARTMENT OF ENERGY

SAVANNAH RIVER SITE

BLDG. NO.	SITE CLEARANCE NO.	DESIGN AREA NO.	DESIGN GROUP
210Z	N/A	N/A	N/A

TITLE

SAVANNAH RIVER PLANT - 200Z AREA
DEFENSE WASTE PROCESSING FACILITY-SALTSTONE
ICR: LE/LIT-1226
LE/LIT-1228, LE/LIT-1229 & LE/LIT-1231
INSTRUMENT LOOP DIAGRAM
E&I CONTROL SYSTEMS
(U)

SCALE	SAP DRAWING NO.	SHEET NO.	LATEST REVISION
NONE	D193700	1 OF 1	6

W.S. # REF FILES YES NO

LEVELS 1111111111222222222333333333444444444455555555556666 1234567890123456789012345678901234567890123456789012 3

PSC+ PLOT DATE 11-9-06 TIME 0943 DRAWN BY (ORIG): LAST CADD REV. BY: M ARORA DATE: 01-25-11

Scale shown on this drawing is only applicable when plotted at 30"x42" (actual drawing size)

AFTER

Design Change Notice (DCN)
Continuation Page

DCP No.	M-DCP-Z-11003	Revision	1	Document No.	D193700	Revision	6
DCN No.	M-DCP-Z-11003-J-00016			Project/Task No.	N/A	Page	4 of 4

Design Change Notice (DCN)

DCP No.		Revision	
M-DCP-Z-11003		0	
DCN No.	**Revision**	**Project/Task No**	**Document No. (Doc Rev)**
M-DCP-Z-11003-J-00017	0	N/A	J-JQ-Z-0002;3

Reason for Change (Be specific)

Provide Upgrade information for Weigh Hopper

Description of Change

REMOVE LOOP L-1231 FROM DRAWING, LOOP RELOCATED TO SEGMENT DRAWING

Engineering Approvals

Originator		Checker/Verifier	Date	Responsible Engineering Manager	Date
DAY, DAVID H	8/28/2012	DOSTER, THOMAS DANIEL	8/29/2012	CAMPBELL, MICHAEL W	8/29/2012

OSR 19-205A# (Rev 4-27-2010)

Design Change Notice (DCN)
Continuation Page

Proc. Ref. E7, 2.38

DCP No.	Revision	Document No.	Revision
M-DCP-Z-11003	0	J-JQ-Z-0002	3
DCN No.	**Revision**	**Project/Task No.**	**Page**
J-00017	0	N/A	2 of 2

Description of Change

BEFORE

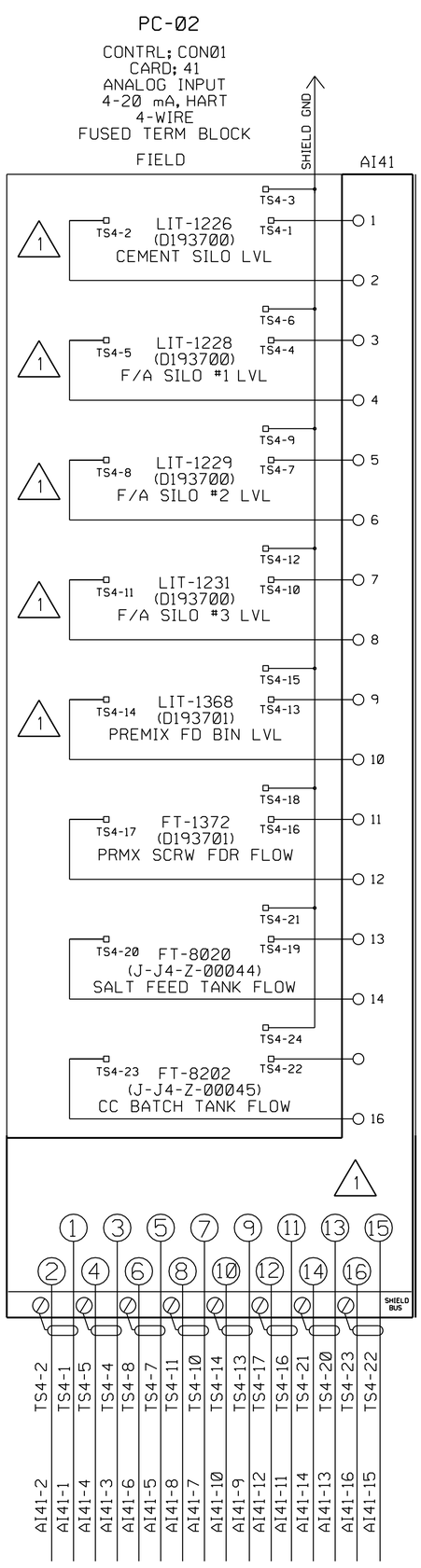

AFTER

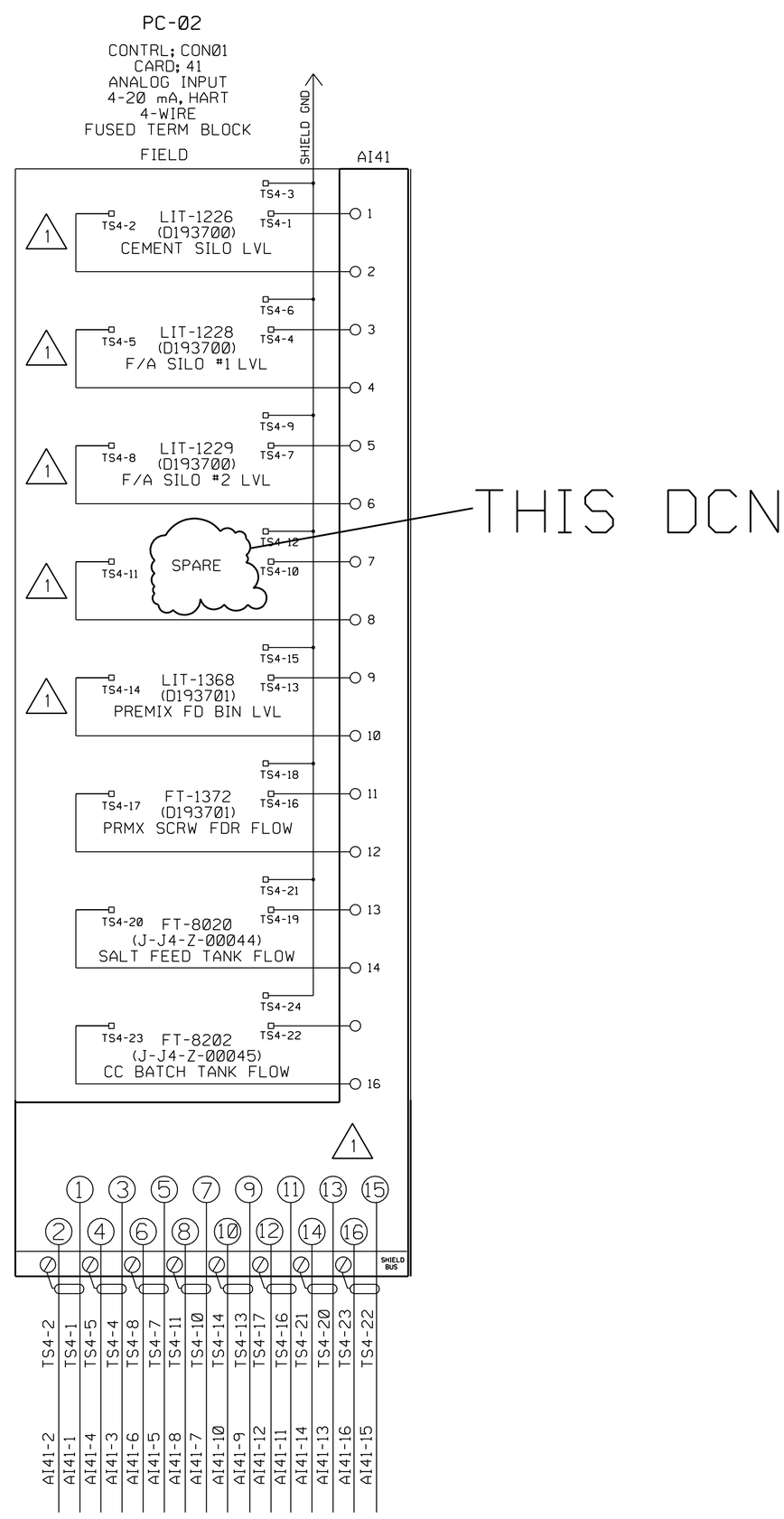

Design Change Notice (DCN)

DCP Number	Revision	
M-DCP-Z-11003	1	
DCN No.	**Revision**	**Project/Task No**
M-DCP-Z-11003-J-00018	0	N/A

Design Change Notice (DCN)

Classification Reviewer: N/A

Date: 04/03/2019

Design Change Notice (DCN)

DCP Number	Revision	
M-DCP-Z-11003	1	
DCN No.	**Revision**	**Project/Task No**
M-DCP-Z-11003-J-00018	0	N/A

Document No. (Doc Rev)
Z205-ZZZL-1231;1

Reason for Change (Be specific)
Provide Upgrade information for Weigh Hopper

Description of Change
Update scaling to reflect new loop design based on this DCP.

Engineering Approvals

Originator	Date	Responsible Engineer Manager	Date
FARROW, RODNEY P.	03/26/2019	JOLLY, RUDOLPH C. JR	04/03/2019

Verifier/Checker	Date	Discipline
WILLIAMSON, WESLEY R. JR	03/28/2019	J-INSTRUMENTATION AND CONTROLS

Verification Method(s)
Design Check (GS/PS only)

Design Change Notice (DCN)
Continuation Page

Proc. Ref. E7,2.38

DCP No. M-DCP-S-11003	Revision 1	Document No. Z205-ZZZL-1231	Revision 1
DCN No. M-DCP-S-11003-J-00018	Revision 0	Project/Task No. N/A	Page 3 of 25

Description of Change

BEFORE

THIS DRAWING HAS BEEN FURNISHED BY THE SAVANNAH RIVER SITE. THE INFORMATION AND KNOW HOW THEREON MAY NOT BE USED NOR THE DRAWING REPRODUCDED WITHOUT THE WRITTEN PERMISSION OF THE PRIME CONTRACTOR. ALL REPRODUCTIONS IN WHOLE OR IN PART, INCLUDING VENDOR' S SHOP DRAWINGS, SHALL BEAR OR REFER TO THIS STAMP.

SALTSTONE

INSTRUMENT SCALING AND

SETPOINT DOCUMENT

Z205-ZZZL-1231

SILO 3 LEVEL

PROJECT	REV.	DATE	REVISION DESCRIPTION	PREP'D	CHECK'D	REV'D	APPV'D	AUTHENTICATOR
NA	1	6/15/05	Added changes from M-DCP-Z-05006	Paul Farrow	Robert Tanner		Tom Berkey	

SRS

DA No: N/A | BLDG No. 210-Z | DESIGN GROUP: DWPF-E

J J Z Z 0 0 0 3 9

UNITED STATES DEPARTMENT OF ENERGY

SRS DRAWING No.	REV.
N/A	1

PAGE 1 OF 11

Scale shown on this drawing is only applicable when plotted at 8.5"x 11" (actual drawing size)

SCALING COMPUTATION

LOOP: Z205-ZZZL-1231
SILO 3 LEVEL

J-JZ-Z-00039
Page 2 of 11
Revision 1

REFERENCES:

P&ID: W754522
Data Sheet: J-JD-Z-00033
Loop Diagram: J-J4-Z-0013
Connection Diagram: J-JQ-Z-0002
Design Change Package: M-DCP-Z-05006

Range: 0 to 55 ft

BASIS: ( ) Check If TSR

This loop provides remote level indication, remote alarms and control functions. Indication range, alarms and control functions are based on engineering judgment and operating history.

LOOP RESPONSE TIME REQUIREMENTS:

None

METHOD:

Linear Scaling Computation (Figure 1)

$$OUTPUT = \left[\frac{INPUT - Inlow}{Inhigh - Inlow} \quad X \quad (Outhigh - Outlow) \right] \quad + \quad Outlow$$

Where:
INPUT = Any Selected Value
OUTPUT = Output Values Corresponding to selected INPUTS
Inlow = Input Scale Zero Value
Inhigh = Input Scale Maximum Value
Outlow = Output Scale Zero Value
Outhigh = Output Scale Maximum Value

Loop Accuracy Computation (Figure 2)

$$Accuracy = \sqrt{(Acc1)^2 + (Acc2)^2 + (Acc3)^2 + \ldots}$$

Where: Acc1, Acc2, Acc3 are instrument accuracies.

AS FOUND PER J-DCF-Z-00251 AND J-DCF-Z-00310

SCALING COMPUTATION

LOOP: Z205-ZZZL-1231
SILO 3 LEVEL

J-JZ-Z-00039
Page 3 of 11
Revision 1

CALCULATIONS:

Analog values for transmitter calibration, displays, alarms, and control functions are derived from equation 1.

$$OUTPUT(mADC) = \left(\frac{FEET - 0}{55 - 0}\right)(20-4)+4$$

Instrument Scaling Calculations:

Calibration Information:
LIT-1231 is not calibrated in the traditional concept of using M&TE for inputs & outputs. It will calibrate itself from input computer commands. The Operational Accuracy for LIT-1231 is ±0.5%. The output of LIT-1231 (4 to 20 mADC) can be simulated for calibration of other loop components.

Z-205-PRA-LIT-1231			Z-205-PRA-LI-1231		DCS EPN LI1231	
DISPLAY FEET	INPUT mADC	OUTPUT FEET	INPUT mADC	OUTPUT FEET	INPUT mADC	OUTPUT FEET
0.00	4.00	0.00	4.00	0.00	4.00	0.00
13.75	8.00	13.75	8.00	13.75	8.00	13.75
27.50	12.00	27.50	12.00	27.50	12.00	27.50
41.25	16.00	41.25	16.00	41.25	16.00	41.25
55.00	20.00	55.00	20.00	55.00	20.00	55.00

Calibration Accuracy: LIT-1231 = N/A
LI-1231 = ±1.0
DCS = ±0.1%

AS FOUND PER J-DCF-Z-00251 AND J-DCF-Z-00310

SCALING COMPUTATION

LOOP: Z205-ZZZL-1231
SILO 3 LEVEL

J-JZ-Z-00039
Page 4 of 11
Revision 1

Calibration Loop Accuracy: Loop Segment LI-1231 to DCS EPN LI1231

Calibration Loop Accuracy = $\sqrt{(LIAcc)^2 + (DCSAcc)^2}$

= $\sqrt{(1.00)^2 + (0.10)^2}$

= ±1.00% of span [±0.55 ft]

Required Accuracy = ±2.00% of span [±1.10 ft]

Operational Loop Accuracy: Loop Segment LIT-1231 to DCS EPN LI1231

Calibration Loop Accuracy = $\sqrt{(LTAcc)^2 + (LIAcc)^2 + (DCSAcc)^2}$

= $\sqrt{(0.50)^2 + (1.00)^2 + (0.10)^2}$

= ±1.12% of span [±0.62 ft]

SETPOINTS:

LSL-1231:	0.00 ft
LSH-1231:	45.00 ft
DCS LAL1231:	20.00 ft
DCS LALL1231:	0.00 ft

ATTACHMENTS: None

SCALING COMPUTATION

LOOP: Z205-ZZZL-1231
SILO 3 LEVEL

J-JZ-Z-00039
Page 5 of 11
Revision 1

Required Accuracy Evaluation
Loop Segment: Z-205-PRA-LI-1231 to DCS EPN LI1231
Loop Range: 0 - 55 FEET

Taking the following items into consideration, will drift of the loop calibration have any adverse or limiting effects?

	Y/N
1. Will an operating limit be affected?	_N__
2. Does the operator use the indication to control the process	_Y__
3. Does the instrument loop control the process?	_N__
4. Does the loop have interlocks?	_N__
5. Will any chemical reactions be affected?	_N__
6. Could product quality be affected?	_N__
7. Must drift in one direction be more restricted than the other?	_N__

If any of the above items are answered “YES” the percent deviation allowable would normally be limited to 1 % greater than the Instrument Accuracy, unless the Cognizant Engineer specifies an alternate value.

If none of the above items are answered “YES” and no other limiting condition exists, the percent deviation allowable would normally be limited to 2 % greater than the Instrument Accuracy, unless the Cognizant Engineer specifies an alternate value.

If some other accuracy value is required, explain with references below.

INSTRUMENT ACCURACY: + 1.00 %

Evaluate the point at which an adverse condition could occur, then determine the required Accuracy.

% Required Accuracy: (+ Percent Deviation) + Loop Accuracy = +2.00%

(- Percent Deviation) - Loop Accuracy = -2.00%

DCP No. M-DCP-Z-11003	Revision 1	Document No. Z205-ZZZL-1231	Revision 1
DCN No. M-DCP-Z-11003-J-00018	Revision 0	Project/Task No. N/A	Page 8 of 25

Description of Change AS FOUND PER J-DCF-Z-00251 AND J-DCF-Z-00310

SCALING COMPUTATION

LOOP: Z205-ZZZL-1231
SILO 3 LEVEL

J-JZ-Z-00039
Page 6 of 11
Revision 1

Setpoint Computation
INSTRUMENT: LSL-1231

INSTRUMENT ADJUSTABLE RANGE: 0.00 to 55.00 ft

CALCULATIONS: None

SETPOINTS: LSL-1231: 0.00 ft

BASIS: ( ) Check if TSR requirement (State the requirement)

This loop provides remote alarms to operators, low and high level controls and interlocks to the weigh hopper controller and the premix feed bin dust collector. Setpoints are based on engineering judgment and operating history.

NOTE: The Setpoint is entered into LI-1231 using pushbuttons, therefore there is no accuracy associated with setting the setpoint. The only accuracy is related to testing the setpoint using a loop method.

SETPOINT ACCURACY: Same as Loop Accuracy

REQUIRED ACCURACY: Same as Loop Accuracy

DCP No. M-DCP-Z-11003	Revision 1	Document No. Z205-ZZZL-1231	Revision 1
DCN No. M-DCP-Z-11003-J-00018	Revision 0	Project/Task No. N/A	Page 9 of 25

Description of Change AS FOUND PER J-DCF-Z-00251 AND J-DCF-Z-00310

SCALING COMPUTATION

LOOP: Z205-ZZZL-1231
SILO 3 LEVEL

J-JZ-Z-00039
Page 7 of 11
Revision 1

Setpoint Computation
INSTRUMENT: LSH-1231

INSTRUMENT ADJUSTABLE RANGE: 0.00 to 55.00 ft

CALCULATIONS: None

SETPOINTS: LSH-1231: 45.00 ft

BASIS: ( ) Check if TSR requirement (State the requirement)

This loop provides remote alarms to operators, low and high level controls and interlocks to the weigh hopper controller and the premix feed bin dust collector. Setpoints are based on engineering judgment and operating history.

NOTE: The Setpoint is entered into LI-1231 using pushbuttons, therefore there is no accuracy associated with setting the setpoint. The only accuracy is related to testing the setpoint using a loop method.

SETPOINT ACCURACY: Same as Loop Accuracy

REQUIRED ACCURACY: Same as Loop Accuracy

SCALING COMPUTATION

LOOP: Z205-ZZZL-1231
SILO 3 LEVEL

J-JZ-Z-00039
Page 8 of 11
Revision 1

Setpoint Computation
INSTRUMENT: DCS LAL-1231

INSTRUMENT ADJUSTABLE RANGE: 0.00 to 55.00 ft

CALCULATIONS: None

SETPOINTS: DCS LAL-1231: 20.00 ft

BASIS: ( ) Check if TSR requirement (State the requirement)

This loop provides remote alarms to operators, low and high level controls and interlocks to the weigh hopper controller and the premix feed bin dust collector. Setpoints are based on engineering judgment and operating history.

SETPOINT ACCURACY: Same as Loop Accuracy

REQUIRED ACCURACY: Same as Loop Accuracy

SCALING COMPUTATION

LOOP: Z205-ZZZL-1231
SILO 3 LEVEL

J-JZ-Z-00039
Page 9 of 11
Revision 1

Setpoint Computation
INSTRUMENT: DCS LALL-1231

INSTRUMENT ADJUSTABLE RANGE: 0.00 to 55.00 ft

CALCULATIONS: None

SETPOINTS: DCS LALL-1231 0.00 ft

BASIS: ( ) Check if TSR requirement (State the requirement)

This loop provides remote alarms to operators, low and high level controls and interlocks to the weigh hopper controller and the premix feed bin dust collector. Setpoints are based on engineering judgment and operating history.

SETPOINT ACCURACY: Same as Loop Accuracy

REQUIRED ACCURACY: Same as Loop Accuracy

Design Change Notice (DCN)
Continuation Page

Proc. Ref. E7,2.38

DCP No. M-DCP-Z-11003	Revision 1	Document No. Z205-ZZZL-1231	Revision 1
DCN No. M-DCP-Z-11003-J-00018	Revision 0	Project/Task No. N/A	Page 12 of 25

Description of Change

AS FOUND PER J-DCF-Z-00251, J-DCF-Z-00310, J-DCF-Z-00415, J-DCF-Z-00461

SCALING COMPUTATION

LOOP: Z205-ZZZL-1231
SILO 3 LEVEL

J-JZ-Z-00039
Page 10 of 11
Revision 1

Z-205-PRA-LI-1231 Indicator Configuration

- Display
  - Analog in 1: Off
  - Calc Value 1: Bar + Unit
- Expert (code is 0000)
  - Input
    - Analog in 1
      - Signal type: Current
      - Signal range: 4-20 mA
      - Lower Range: 0
      - Upper Range: 100
      - Bar 0%: 0
      - Bar 100%: 100
      - Offset: 0
      - Decimal places: XXXX X
      - Damping: 0
      - Failure mode: Fixed value
      - Fixed fail value: 100
      - Namur NE43: Off
  - Output
    - Analog out 1 (programmed after Application)
      - Assignment: Calc value 1
      - Signal range: 4-20 mA
      - Lower Range: 0
      - Upper Range: 55
      - Fail mode: Max
    - Relay 1 (programmed after Application)
      - Assignment: Calc value 1
      - Function: Max
      - Setpoint: 45
      - Hysteresis: 1
      - Time Delay: 0
      - Operating mode: norm opened
      - Failure mode: norm closed
    - Relay 2 (programmed after Application)
      - Assignment: Calc value 1
      - Function: Min
      - Setpoint: 0
      - Hysteresis: 1
      - Time Delay: 0
      - Operating mode: norm opened
      - Failure mode: norm closed
  - Application
    - Calc value 1
      - Calculation: Lineariz AI1
      - Unit: feet
      - Bar 0%: 0
      - Bar 100%: 55
      - Factor: 1
      - Offset: 0
      - Decimal places: XXXX X
      - Failure mode: Fixed value
      - Fixed fail value: 100
      - No lin points: 2
      - X-Value
        - X-Value 1: 0
        - X-Value 2: 100
      - Y-Value
        - Y-Value 1: 0
        - Y-Value 2: 55

Description of Change

AS FOUND PER J-DCF-Z-00310

SCALING COMPUTATION

LOOP: Z205-ZZZL-1231
SILO 3 LEVEL

J-JZ-Z-00039
Page 11 of 11
Revision 1

Z-205-PRA-LIT-1231 Transmitter Configuration

Parameter	Setting
Basic Adjustment	
Min. Adjustment	0.00% - 18.29 m (60.00 FT)
Max. Adjustment	100.000% = 1.52 m (5.00 FT)
Medium	Solid - Powder/Dust
Vessel Form	Silo
Damping	5 s
Linearization	Linear

Design Change Notice (DCN)
Continuation Page

Proc. Ref. E7,2.38

DCP No. M-DCP-Z-11003	Revision 1	Document No. Z205-ZZZL-1231	Revision 1
DCN No. M-DCP-Z-11003-J-00018	Revision 0	Project/Task No. N/A	Page 14 of 25

Description of Change

AFTER

THIS DRAWING HAS BEEN FURNISHED BY THE SAVANNAH RIVER SITE. THE INFORMATION AND KNOW HOW THEREON MAY NOT BE USED NOR THE DRAWING REPRODUCDED WITHOUT THE WRITTEN PERMISSION OF THE PRIME CONTRACTOR. ALL REPRODUCTIONS IN WHOLE OR IN PART, INCLUDING VENDOR' S SHOP DRAWINGS, SHALL BEAR OR REFER TO THIS STAMP.

SALTSTONE

INSTRUMENT SCALING AND

SETPOINT DOCUMENT

Z205-ZZZL-1231

SILO 3 LEVEL

THIS DCN

Approvals Maintained in DCR/EDWS

PROJECT	REV.	DATE	REVISION DESCRIPTION	REV'D	DESIGNED	CHK'D	APPR'D	APPR'D	AUTHENTICATOR
NA	1	6/15/05	Added changes from M-DCP-Z-05006	Paul Farrow	Robert Tanner			Tom Berkey	

DA No: N/A | BLDG No. 210-Z | DESIGN GROUP: DWPF-E

J J Z Z 0 0 0 3 9

SRS

UNITED STATES DEPARTMENT OF ENERGY

SRS DRAWING No.	REV.
N/A	1

PAGE 1 OF 11

Scale shown on this drawing is only applicable when plotted at 8.5"x 11" (actual drawing size)

AFTER

SCALING COMPUTATION

LOOP: Z205-ZZZL-1231
SILO 3 LEVEL

J-JZ-Z-00039
Page 2 of 11
Revision 1

REFERENCES:

P&ID: W754522
Data Sheet: J-JD-Z-00033
Segment Drawing: J-J8-Z-00032
Connection Diagram: J-JQ-Z-0002
~~Design Change Package: M-DCP-Z-05006~~

THIS DCN

Range: 0 to 55 ft

BASIS: ( ) Check If TSR

This loop provides remote level indication, remote alarms and control functions. Indication range, alarms and control functions are based on engineering judgment and operating history.

LOOP RESPONSE TIME REQUIREMENTS:

None

METHOD:

Linear Scaling Computation (Figure 1)

$$OUTPUT = \left[\frac{INPUT - Inlow}{Inhigh - Inlow} \quad X \quad \left(Outhigh - Outlow\right) \right] \quad + \quad Outlow$$

Where:
INPUT = Any Selected Value
OUTPUT = Output Values Corresponding to selected INPUTS
Inlow = Input Scale Zero Value
Inhigh = Input Scale Maximum Value
Outlow = Output Scale Zero Value
Outhigh = Output Scale Maximum Value

Loop Accuracy Computation (Figure 2)

$$Accuracy = \sqrt{(Acc1)^2 + (Acc2)^2 + (Acc3)^2 + \ldots}$$

Where: Acc1, Acc2, Acc3 are instrument accuracies.

SCALING COMPUTATION

LOOP: Z205-ZZZL-1231
SILO 3 LEVEL

J-JZ-Z-00039
Page 3 of 11
Revision 1

CALCULATIONS:

Analog values for transmitter calibration, displays, alarms, and control functions are derived from equation 1.

$$OUTPUT(mADC) = \left(\frac{FEET - 0}{55 - 0}\right)(20-4)+4$$

Instrument Scaling Calculations:

Calibration Information:
LIT-1231 is not calibrated in the traditional concept of using M&TE for inputs & outputs. It will calibrate itself from input computer commands. The Operational Accuracy for LIT-1231 is ±0.5%. The output of LIT-1231 (4 to 20 mADC) can be simulated for calibration of other loop components.

Z-205-BMH-LIT-1231			Z-205-BMH-LI-1231	
DISPLAY FEET	INPUT mADC	OUTPUT FEET	INPUT mADC	OUTPUT FEET
0.00	4.00	0.00	4.00	0.00
13.75	8.00	13.75	8.00	13.75
27.50	12.00	27.50	12.00	27.50
41.25	16.00	41.25	16.00	41.25
55.00	20.00	55.00	20.00	55.00

Z-205-BMH-UT-1231		DCS EPN LI1231	
INPUT mADC	OUTPUT Fieldbus	INPUT Fieldbus	OUTPUT FEET
4.00			0.00
8.00			13.75
12.00	Digital	Digital	27.50
16.00			41.25
20.00			55.00

THIS DCN

Calibration Accuracy: LIT-1231 = N/A
LI-1231 = ±1.0%
UT-1231 = ±0.1%
DCS = ±0.1%

Description of Change

AFTER

SCALING COMPUTATION

LOOP: Z205-ZZZL-1231
SILO 3 LEVEL

J-JZ-Z-00039
Page 4 of 11
Revision 1

Calibration Loop Accuracy: Loop Segment LI-1231 to DCS EPN LI1231

Calibration Loop Accuracy = $\sqrt{(LIAcc)^2 + (UTAcc)^2 + (DCSAcc)^2}$

= $\sqrt{(1.00)^2 + (0.10)^2 + (0.10)^2}$

= ±1.01% of span [±0.56 ft]

Required Accuracy = ±2.01% of span [±1.11 ft]

Operational Loop Accuracy: Loop Segment LIT-1231 to DCS EPN LI1231

Calibration Loop Accuracy = $\sqrt{(LTAcc)^2 + (LIAcc)^2 + (UTAcc)^2 + (DCSAcc)^2}$

= $\sqrt{(0.50)^2 + (1.00)^2 + (0.10)^2 + (0.10)^2}$

= ±1.13% of span [±0.62 ft]

THIS DCN

SETPOINTS:

LSL-1231:	0.00 ft
LSH-1231:	45.00 ft
DCS LAL1231:	20.00 ft
DCS LALL1231:	0.00 ft

ATTACHMENTS: None

Description of Change

AFTER

LOOP: Z205-ZZZL-1231
SILO 3 LEVEL

J-JZ-Z-00039
Page 5 of 11
Revision 1

Required Accuracy Evaluation
Loop Segment: Z-205-BMH-LI-1231 to DCS EPN LI1231
Loop Range: 0 - 55 FEET

THIS DCN

Taking the following items into consideration, will drift of the loop calibration have any adverse or limiting effects?

	Y/N
1. Will an operating limit be affected?	_N__
2. Does the operator use the indication to control the process	_Y__
3. Does the instrument loop control the process?	_N__
4. Does the loop have interlocks?	_N__
5. Will any chemical reactions be affected?	_N__
6. Could product quality be affected?	_N__
7. Must drift in one direction be more restricted than the other?	_N__

If any of the above items are answered "YES" the percent deviation allowable would normally be limited to 1 % greater than the Instrument Accuracy, unless the Cognizant Engineer specifies an alternate value.

If none of the above items are answered "YES" and no other limiting condition exists, the percent deviation allowable would normally be limited to 2 % greater than the Instrument Accuracy, unless the Cognizant Engineer specifies an alternate value.

If some other accuracy value is required, explain with references below.

INSTRUMENT ACCURACY: ±1.01 %

Evaluate the point at which an adverse condition could occur, then determine the required Accuracy.

THIS DCN

% Required Accuracy: (+ Percent Deviation) + Loop Accuracy = +2.01%

(- Percent Deviation) - Loop Accuracy = -2.01%

AFTER, NO CHANGES MADE

SCALING COMPUTATION

LOOP: Z205-ZZZL-1231
SILO 3 LEVEL

J-JZ-Z-00039
Page 6 of 11
Revision 1

Setpoint Computation
INSTRUMENT: LSL-1231

INSTRUMENT ADJUSTABLE RANGE: 0.00 to 55.00 ft

CALCULATIONS: None

SETPOINTS: LSL-1231: 0.00 ft

BASIS: ( ) Check if TSR requirement (State the requirement)

This loop provides remote alarms to operators, low and high level controls and interlocks to the weigh hopper controller and the premix feed bin dust collector. Setpoints are based on engineering judgment and operating history.

NOTE: The Setpoint is entered into LI-1231 using pushbuttons, therefore there is no accuracy associated with setting the setpoint. The only accuracy is related to testing the setpoint using a loop method.

SETPOINT ACCURACY: Same as Loop Accuracy

REQUIRED ACCURACY: Same as Loop Accuracy

DCP No. M-DCP-Z-11003	Revision 1	Document No. Z205-ZZZL-1231	Revision 1
DCN No. M-DCP-Z-11003-J-00018	Revision 0	Project/Task No. N/A	Page 20 of 25

Description of Change

AFTER, NO CHANGES MADE

SCALING COMPUTATION

LOOP: Z205-ZZZL-1231
SILO 3 LEVEL

J-JZ-Z-00039
Page 7 of 11
Revision 1

Setpoint Computation
INSTRUMENT: LSH-1231

INSTRUMENT ADJUSTABLE RANGE: 0.00 to 55.00 ft

CALCULATIONS: None

SETPOINTS: LSH-1231: 45.00 ft

BASIS: ( ) Check if TSR requirement (State the requirement)

This loop provides remote alarms to operators, low and high level controls and interlocks to the weigh hopper controller and the premix feed bin dust collector. Setpoints are based on engineering judgment and operating history.

NOTE: The Setpoint is entered into LI-1231 using pushbuttons, therefore there is no accuracy associated with setting the setpoint. The only accuracy is related to testing the setpoint using a loop method.

SETPOINT ACCURACY: Same as Loop Accuracy

REQUIRED ACCURACY: Same as Loop Accuracy

DCP No. M-DCP-Z-11003	Revision 1	Document No. Z205-ZZZL-1231	Revision 1
DCN No. M-DCP-Z-11003-J-00018	Revision 0	Project/Task No. N/A	Page 21 of 25

Description of Change

AFTER, NO CHANGES MADE

SCALING COMPUTATION

LOOP: Z205-ZZZL-1231
SILO 3 LEVEL

J-JZ-Z-00039
Page 8 of 11
Revision 1

Setpoint Computation
INSTRUMENT: DCS LAL-1231

INSTRUMENT ADJUSTABLE RANGE: 0.00 to 55.00 ft

CALCULATIONS: None

SETPOINTS: DCS LAL-1231: 20.00 ft

BASIS: ( ) Check if TSR requirement (State the requirement)

This loop provides remote alarms to operators, low and high level controls and interlocks to the weigh hopper controller and the premix feed bin dust collector. Setpoints are based on engineering judgment and operating history.

SETPOINT ACCURACY: Same as Loop Accuracy

REQUIRED ACCURACY: Same as Loop Accuracy

DCP No. M-DCP-Z-11003	Revision 1	Document No. Z205-ZZZL-1231	Revision 1
DCN No. M-DCP-Z-11003-J-00018	Revision 0	Project/Task No. N/A	Page 22 of 25

Description of Change

AFTER, NO CHANGES MADE

SCALING COMPUTATION

LOOP: Z205-ZZZL-1231
SILO 3 LEVEL

J-JZ-Z-00039
Page 9 of 11
Revision 1

Setpoint Computation
INSTRUMENT: DCS LALL-1231

INSTRUMENT ADJUSTABLE RANGE: 0.00 to 55.00 ft

CALCULATIONS: None

SETPOINTS: DCS LALL-1231 0.00 ft

BASIS: ( ) Check if TSR requirement (State the requirement)

This loop provides remote alarms to operators, low and high level controls and interlocks to the weigh hopper controller and the premix feed bin dust collector. Setpoints are based on engineering judgment and operating history.

SETPOINT ACCURACY: Same as Loop Accuracy

REQUIRED ACCURACY: Same as Loop Accuracy

DCP No. M-DCP-Z-11003	Revision 1	Document No. Z205-ZZZL-1231	Revision 1
DCN No. M-DCP-Z-11003-J-00018	Revision 0	Project/Task No. N/A	Page 23 of 25

Description of Change

AFTER

SCALING COMPUTATION

LOOP: Z205-ZZZL-1231
SILO 3 LEVEL

J-JZ-Z-00039
Page 10 of 11
Revision 1

Z-205-BMH-LI-1231 Indicator Configuration
Page 1 of 2

THIS DCN

- Display
  - o Analog in 1: Off
  - o Calc Value 1: Bar + Unit
- Expert (code is 0000)
  - o Input
    - ▪ Analog in 1
      - Signal type: Current
      - Signal range: 4-20 mA
      - Lower Range: 0
      - Upper Range: 100
      - Bar 0%: 0
      - Bar 100%: 100
      - Offset: 0
      - Decimal places: XXXX . X
      - Damping: 0
      - Failure mode: Fixed value
      - Fixed fail value: 100
      - Namur NE43: Off
  - o Output
    - ▪ Analog out 1 (programmed after Application)
      - Assignment: Calc value 1
      - Signal range: 4-20 mA
      - Lower Range: 0
      - Upper Range: 55
      - Fail mode: Max
    - ▪ Relay 1 (programmed after Application)
      - Assignment: Calc value 1
      - Function: Max
      - Setpoint: 45
      - Hysteresis: 1
      - Time Delay: 0
      - Operating mode: norm opened
      - Failure mode: norm closed

DCP No. M-DCP-Z-11003	Revision 1	Document No. Z205-ZZZL-1231	Revision 1
DCN No. M-DCP-Z-11003-J-00018	Revision 0	Project/Task No. N/A	Page 24 of 25

Description of Change

AFTER

SCALING COMPUTATION

LOOP: Z205-ZZZL-1231
SILO 3 LEVEL

J-JZ-Z-00039
Page 10A of 11
Revision 1

Z-205-BMH-LI-1231 Indicator Configuration
Page 2 of 2

THIS DCN

- Relay 2 (programmed after Application)
  - Assignment: Calc value 1
  - Function: Min
  - Setpoint: 0
  - Hysteresis: 1
  - Time Delay: 0
  - Operating mode: norm opened
  - Failure mode: norm closed

o Application
- Calc value 1
  - Calculation: Lineariz. AI1
  - Unit: feet
  - Bar 0%: 0
  - Bar 100%: 55
  - Factor: 1
  - Offset: 0
  - Decimal places: XXXX . X
  - Failure mode: Fixed value
  - Fixed fail value: 100
  - No lin points: 2
  - X-Value
    - o X-Value 1: 0
    - o X-Value 2: 100
  - Y-Value
    - o Y-Value 1: 0
    - o Y-Value 2: 55

Design Change Notice (DCN)
Continuation Page

Proc. Ref. E7,2.38

DCP No. M-DCP-Z-11003	Revision 1	Document No. Z205-ZZZL-1231	Revision 1
DCN No. M-DCP-Z-11003-J-00018	Revision 0	Project/Task No. N/A	Page 25 of 25

Description of Change

AFTER

SCALING COMPUTATION

LOOP: Z205-ZZZL-1231
SILO 3 LEVEL

J-JZ-Z-00039
Page 11 of 11
Revision 1

Z-205-BMH-LIT-1231 Transmitter Configuration
Page 1 of 1

THIS DCN

Parameter	**Setting**
Basic Setup	
Min. Adjustment	0.00% = 18.29 m (60.00FT)
Max. Adjustment	100.000% = 1.52 m (5.00FT)
Medium	Solid – Power/Dust
Vessel Form	Silo
Damping	5 s
Linearization	Linear

Design Change Notice (DCN)

DCP Number	Revision	
M-DCP-Z-11003	1	
DCN No.	**Revision**	**Project/Task No**
M-DCP-Z-11003-J-00019	0	N/A

Design Change Notice (DCN)

Classification Reviewer: N/A

Date: 05/21/2019

Design Change Notice (DCN)

DCP Number	Revision	
M-DCP-Z-11003	1	
DCN No.	**Revision**	**Project/Task No**
M-DCP-Z-11003-J-00019	0	N/A

Document No. (Doc Rev)
AC47575A-1;A

Reason for Change (Be specific)
Provide Upgrade information for Weigh Hopper

Description of Change
Update the vendor analog meter panel drawing and their wiring to reflect the as-build configuration and also to show installation of new parts that will be installed in the panel.

Engineering Approvals

Originator	Date	Responsible Engineer Manager	Date
PATEL, KIRAN K.	05/20/2019	SUD, RAJENDRA J.	05/21/2019

Verifier/Checker	Date	Discipline
HEVEL, STEPHEN D.	05/20/2019	J-INSTRUMENTATION AND CONTROLS

Verification Method(s)
Design Check (GS/PS only)

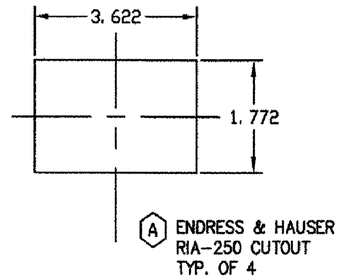

ORIGINAL

LEGEND:
1.) LI-1226
2.) LI-1228
3.) LI-1229
4.) LI-1231

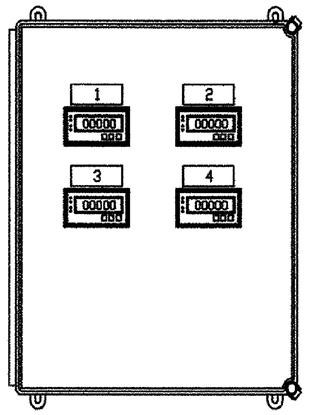

ENCLOSURE FRONT VIEW

9.84"(L) X 6.89"(W) NEMA-4X
POLYCARBONATE ENCLOSURE
HOFFMAN Q251815PCE

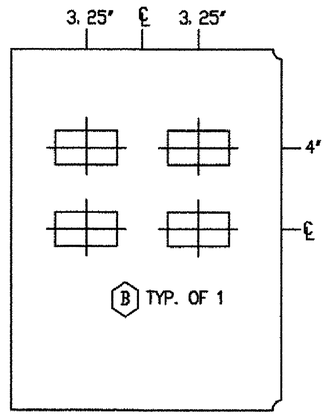

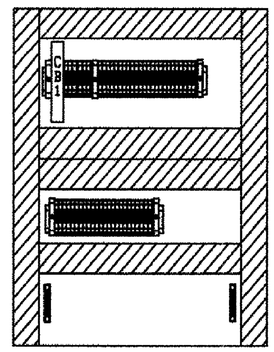

SUBPANEL LAYOUT

BILL OF MATERIALS			
DESCRIPTION		QTY	PART NUMBER
ENCLOSURE		1	18"(H)X16"(W)X10"(D) HOFFMAN PART# A181610CHQRFG
REAR SUBPLATE		1	18'(H)X16"(W) HOFFMAN PART # A18P16
CB1		1	SQ.D QOU110
TERMINALS		53	ENTRELEC TYPE M 4/6 P/N 115 116. 07
TERMINAL BARRIERS		4	ENTRELEC TYPE FEM6 P/N 118 368. 16
TERMINAL END CLAMPS		7	IDEC BNL5
CHASIS GROUND LUG		2	SQ.D PK4GTA
PROCESS DISPLAY		4	ENDRESS+HAUSER RIA250-A11R3K

ENGINEERING DOC. CONTROL-SRS
00798851

SAVANNAH RIVER SITE
Supplier Document Status
Sub# MT-WD-2005-00002
☐ 1. Work May Proceed
☐ 2. Submit Final Document – Work May Proceed
☐ 3. Revise and Resubmit Work – May Proceed Subject to Resolution of Indicated Comments
☐ 4. Revise and Resubmit – Work May Not Proceed
☒ 5. Permission To Proceed Not Required Package Pg# 24175
Permission to proceed does not constitute acceptance or approval of design details, calculations, test methods, analysis or materials developed or selected by the supplier, and does not relieve supplier from full compliance with contractual obligations or release of any "holds" placed on the contract.
AC47575A-001-A-EH
Document Category 1.4
Date 8/16/2005
Reviewer Rajan Pahi

REV	DATE	DESCRIPTION	BY
B	8-4-05	AS BUILT	JD
A	8-1-05	FOR CONSTRUCTION	JD

THIS DRAWING CONTAINS INFORMATION PROPRIETARY TO CITI, LLC., IT IS SUBMITTED IN CONFIDENCE AND IS TO BE USED SOLELY FOR THE PURPOSE FOR WHICH IT IS FURNISHED AND RETURNED UPON REQUEST. THIS DRAWING AND SUCH INFORMATION IS NOT TO BE REPRODUCED, TRANSMITTED, DISCLOSED OR USED OTHERWISE IN WHOLE OR IN PART WITHOUT THE WRITTEN AUTHORIZATION OF CITI, LLC.

CITI, LLC
Charlotte, North Carolina

WSRC PO# AC47575A	SCALE NONE	DRAWN BY JMD
ENDRESS & HAUSER RIA-250 DISPLAY PANEL (LI-1226, 1228.1229,1231) LAYOUT & FABRICATION		ENGINEER EA
DATE 8-1-05	DRAWING PATH I:\DWGS\205097	DRAWING NUMBER RIA-250

BEFORE

Design Change Notice (DCN)
Continuation Page

DCP No. M-DCP-Z-11003	Revision 1	Document No. AC47575A-000001	Revision A
DCN No. M-DCP-Z-11003-J-00019	Revision 0	Project/Task No. N/A	Page 3 of 7

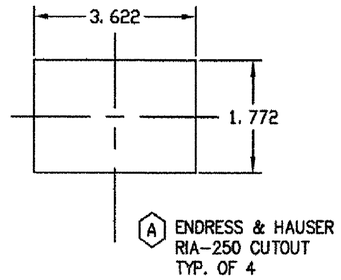

ORIGINAL

LEGEND:
1.) LI-1226
2.) LI-1228
3.) LI-1229
4.) LI-1231
5.) Z-205008-BMH-CAB-1
SILO LEVEL INDICATOR

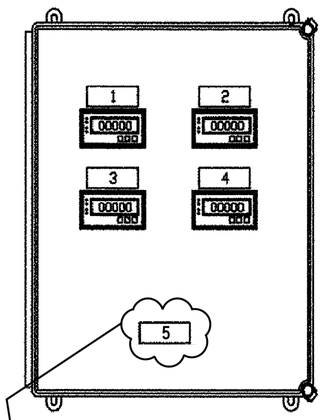

ENCLOSURE FRONT VIEW
9.84"(L) X 6.89"(W) NEMA-4X
POLYCARBONATE ENCLOSURE
HOFFMAN Q251815PCE

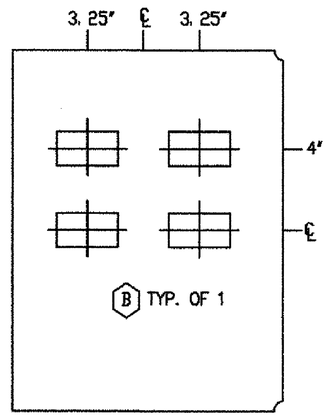

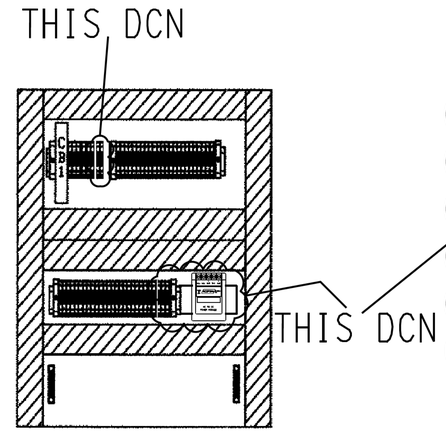

SUBPANEL LAYOUT

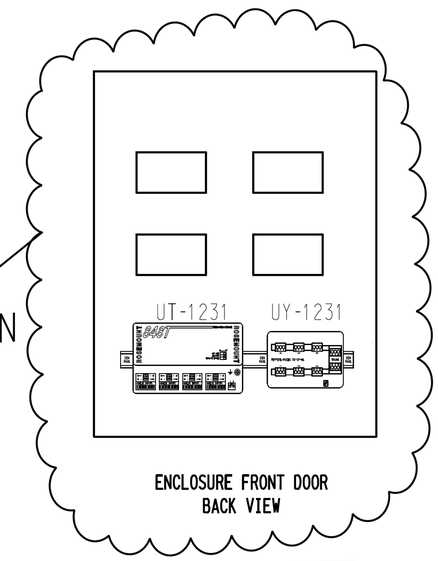

ENCLOSURE FRONT DOOR
BACK VIEW

THIS DCN

BILL OF MATERIALS			
DESCRIPTION		QTY	PART NUMBER
ENCLOSURE		1	18"(H)X16"(W)X10"(D) HOFFMAN PART# A181610CHQRFG
REAR SUBPLATE		1	18"(H)X16"(W) HOFFMAN PART # A18P16
CB1		1	SQ.D QOU110
TERMINALS		55	ENTRELEC TYPE M 4/6 P/N 115 116. 07
TERMINAL BARRIERS		4	ENTRELEC TYPE FEM6 P/N 118 368. 16
TERMINAL END CLAMPS		7	IDEC BNL5
CHASIS GROUND LUG		2	SQ.D PK4GTA
PROCESS DISPLAY		4	ENDRESS+HAUSEI RIA45-A1C1A2

THIS DCN
DWG CHANGE ONLY

CONSTRUCTION NOTES: (DO NOT INCORPORATE)

1) INSTALL TWO NEW TERMINALS NEXT TO EXISTING POWER TERMINALS ON THE TOP BAY OF SUB PANEL (FOR SUPPLYING POWER TO THE NEW AC TO DC POWER SUPPLY LOCATED ON SUBPANEL). WIRING PER J-J8-Z-00032.

2) INSTALL THREE NEW TERMINALS NEXT TO EXISTING TB-2 TERMINALS ON THE MIDDLE BAY OF SUB PANEL (FOR CONNECTION TO EXTERNAL DEVICE PEPPERL+FUCHS R2-SP-IC6;UY-1282). WIRING PER J-J8-Z-00032.

3) INSTALL NEW AC TO DC POWER SUPPLY (ACOPIAN 24EB60 WITH EB35DIN RAIL) NEXT TO TB2 ON SUBPANEL. WIRING PER J-J8-Z-00032.

4) INSTALL ROSEMONT 848T-F-15-S002 (UT-1231) AND PEPPERL+FUCHS R2-SP-IC6 (UY-1231) DEVICES ON THE ENCLOSURE DOOR USING 35MM DIN RAIL AS SUCH THE DEVICES DO NOT INTERFERE WITH DOOR CLOSING. WIRING PER J-J8-Z-00032.

5) APPLY SILO LEVEL INDICATOR (Z-205008-BMH-CAB-1) LABEL ON THE FRONT OF THE CABINET AS SHOWN ON THE ENCLOSURE FRONT VIEW.

SAVANNAH RIVER SITE
Supplier Document Status
Doc # MT-WD-2005-0002
☐ 1. Work May Proceed
☐ 2. Submit Final Document – Work May Proceed
☐ 3. Revise and Resubmit Work – May Proceed Subject to Resolution of Indicated Comments
☐ 4. Revise and Resubmit – Work May Not Proceed
☒ 5. Permission To Proceed Not Required
Package
Permission to proceed does not constitute acceptance or approval of design details, calculations, test methods, analysis or materials developed or selected by the supplier, and does not relieve supplier from full compliance with contractual obligations or release of any "holds" placed on the contract.
AC47575A-001-A-EH
Document Category
1.4
Date 8/16/2005
Reviewer Rajiv Pahi

ENGINEERING DOC. CONTROL-SRS
00798851

REV	DATE	DESCRIPTION	BY
B	8-4-05	AS BUILT	JD
A	8-1-05	FOR CONSTRUCTION	JD

THIS DRAWING CONTAINS INFORMATION PROPRIETARY TO CITI, LLC., IT IS SUBMITTED IN CONFIDENCE AND IS TO BE USED SOLELY FOR THE PURPOSE FOR WHICH IT IS FURNISHED AND RETURNED UPON REQUEST. THIS DRAWING AND SUCH INFORMATION IS NOT TO BE REPRODUCED, TRANSMITTED, DISCLOSED OR USED OTHERWISE IN WHOLE OR IN PART WITHOUT THE WRITTEN AUTHORIZATION OF CITI, LLC.

CITI, LLC
Charlotte, North Carolina

WSRC
PO# AC47575A

SCALE: NONE
DRAWN BY: JMD
ENGINEER: EA

ENDRESS & HAUSER RIA-250 DISPLAY PANEL (LI-1226, 1228.1229,1231) LAYOUT & FABRICATION

DATE: 8-1-05
DRAWING PATH: I:\DWGS\205097
DRAWING NUMBER: RIA-250

Design Change Notice (DCN)
Continuation Page

AFTER

DCP No.	M-DCP-Z-11003	Revision	1	Document No.	AC47575A-000001	Revision	A
DCN No.	M-DCP-Z-11003-J-00019	Revision	0	Project/Task No.	N/A	Page	4 of 7

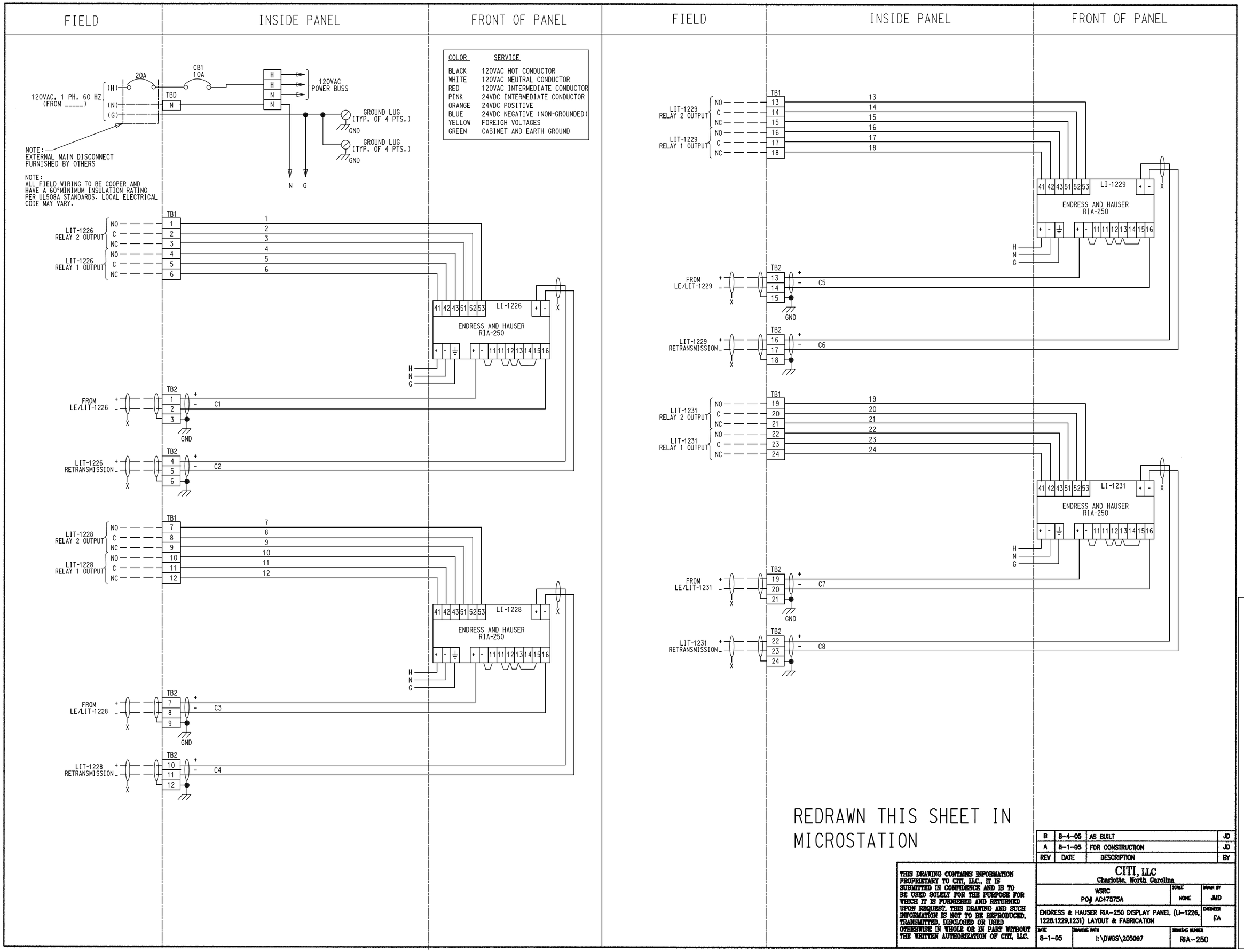
FIELD
INSIDE PANEL
FRONT OF PANEL
120VAC, 1 PH, 60 HZ (FROM _____)
(H)
(N)
(G)
20A
CB1 10A
TBD
N
H
H
N
N
120VAC POWER BUSS
GROUND LUG (TYP, OF 4 PTS,)
GND
GROUND LUG (TYP, OF 4 PTS,)
GND
N G
NOTE: EXTERNAL MAIN DISCONNECT FURNISHED BY OTHERS
NOTE: ALL FIELD WIRING TO BE COOPER AND HAVE A 60°MINIMUM INSULATION RATING PER UL508A STANDARDS. LOCAL ELECTRICAL CODE MAY VARY.
COLOR SERVICE
BLACK 120VAC HOT CONDUCTOR
WHITE 120VAC NEUTRAL CONDUCTOR
RED 120VAC INTERMEDIATE CONDUCTOR
PINK 24VDC INTERMEDIATE CONDUCTOR
ORANGE 24VDC POSITIVE
BLUE 24VDC NEGATIVE (NON-GROUNDED)
YELLOW FOREIGH VOLTAGES
GREEN CABINET AND EARTH GROUND
TB1
LIT-1226 RELAY 2 OUTPUT
LIT-1226 RELAY 1 OUTPUT
NO
C
NC
1 2 3 4 5 6
LI-1226
ENDRESS AND HAUSER RIA-250
41 42 43 51 52 53
11 11 12 13 14 15 16
H N G
TB2
FROM LE/LIT-1226
C1
GND
LIT-1226 RETRANSMISSION
C2
TB1
LIT-1228 RELAY 2 OUTPUT
LIT-1228 RELAY 1 OUTPUT
7 8 9 10 11 12
LI-1228
FROM LE/LIT-1228
C3
LIT-1228 RETRANSMISSION
C4
TB1
LIT-1229 RELAY 2 OUTPUT
LIT-1229 RELAY 1 OUTPUT
13 14 15 16 17 18
LI-1229
FROM LE/LIT-1229
C5
LIT-1229 RETRANSMISSION
C6
TB1
LIT-1231 RELAY 2 OUTPUT
LIT-1231 RELAY 1 OUTPUT
19 20 21 22 23 24
LI-1231
FROM LE/LIT-1231
C7
LIT-1231 RETRANSMISSION
C8
REDRAWN THIS SHEET IN MICROSTATION
B 8-4-05 AS BUILT JD
A 8-1-05 FOR CONSTRUCTION JD
REV DATE DESCRIPTION BY
THIS DRAWING CONTAINS INFORMATION PROPRIETARY TO CITI, LLC., IT IS SUBMITTED IN CONFIDENCE AND IS TO BE USED SOLELY FOR THE PURPOSE FOR WHICH IT IS FURNISHED AND RETURNED UPON REQUEST. THIS DRAWING AND SUCH INFORMATION IS NOT TO BE REPRODUCED, TRANSMITTED, DISCLOSED OR USED OTHERWISE IN WHOLE OR IN PART WITHOUT THE WRITTEN AUTHORIZATION OF CITI, LLC.
CITI, LLC
Charlotte, North Carolina
WSRC
PO# AC47575A
SCALE NONE
DRAWN BY JMD
ENDRESS & HAUSER RIA-250 DISPLAY PANEL (LI-1226, 1228,1229,1231) LAYOUT & FABRICATION
ENGINEER EA
DATE 8-1-05
DRAWING PATH I:\DWGS\205097
DRAWING NUMBER RIA-250
BEFORE
Design Change Notice (DCN) Continuation Page
DCP No. M-DCP-Z-11003
Revision 1
Document No. AC47575A-000001
Revision A
DCN No. M-DCP-Z-11003-J-00019
Revision 0
Project/Task No. N/A
Page 5 of 7

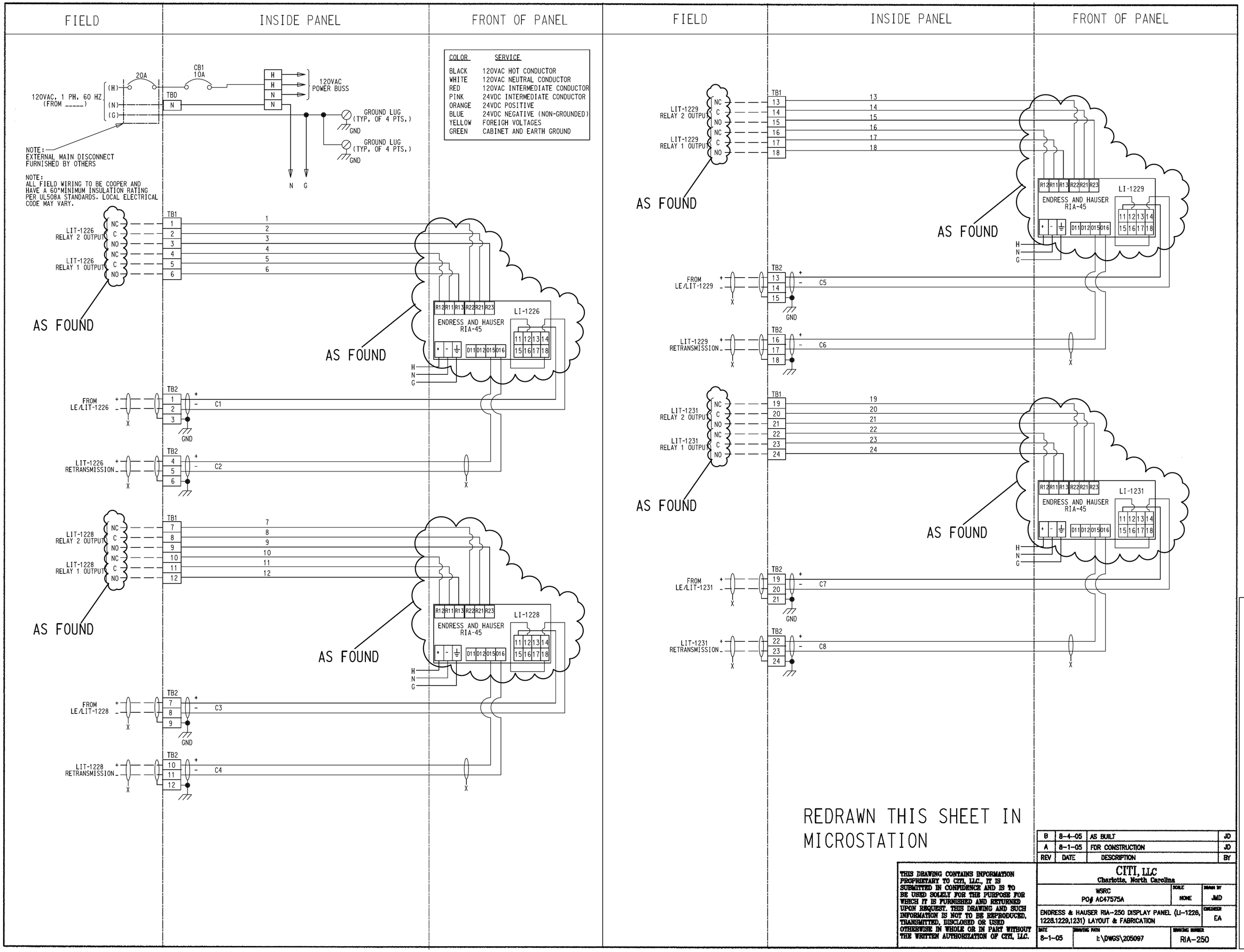
FIELD
INSIDE PANEL
FRONT OF PANEL
120VAC, 1 PH, 60 HZ (FROM _____)
(H)
(N)
(G)
20A
CB1 10A
TBD
N
H
H
N
N
120VAC POWER BUSS
GROUND LUG (TYP, OF 4 PTS,)
GND
GROUND LUG (TYP, OF 4 PTS,)
GND
N G
NOTE: EXTERNAL MAIN DISCONNECT FURNISHED BY OTHERS
NOTE: ALL FIELD WIRING TO BE COOPER AND HAVE A 60°MINIMUM INSULATION RATING PER UL508A STANDARDS. LOCAL ELECTRICAL CODE MAY VARY.
COLOR SERVICE
BLACK 120VAC HOT CONDUCTOR
WHITE 120VAC NEUTRAL CONDUCTOR
RED 120VAC INTERMEDIATE CONDUCTOR
PINK 24VDC INTERMEDIATE CONDUCTOR
ORANGE 24VDC POSITIVE
BLUE 24VDC NEGATIVE (NON-GROUNDED)
YELLOW FOREIGH VOLTAGES
GREEN CABINET AND EARTH GROUND
LIT-1226 RELAY 2 OUTPUT
LIT-1226 RELAY 1 OUTPUT
NC C NO NC C NO
TB1
1 2 3 4 5 6
AS FOUND
R12 R11 R13 R22 R21 R23
ENDRESS AND HAUSER RIA-45
LI-1226
11 12 13 14 15 16 17 18
D11 D12 D15 D16
H N G
FROM LE/LIT-1226
TB2
1 2 3
C1
LIT-1226 RETRANSMISSION
4 5 6
C2
LIT-1228 RELAY 2 OUTPUT
LIT-1228 RELAY 1 OUTPUT
7 8 9 10 11 12
LI-1228
FROM LE/LIT-1228
C3
LIT-1228 RETRANSMISSION
10 11 12
C4
LIT-1229 RELAY 2 OUTPUT
LIT-1229 RELAY 1 OUTPUT
13 14 15 16 17 18
LI-1229
FROM LE/LIT-1229
C5
LIT-1229 RETRANSMISSION
C6
LIT-1231 RELAY 2 OUTPUT
LIT-1231 RELAY 1 OUTPUT
19 20 21 22 23 24
LI-1231
FROM LE/LIT-1231
C7
LIT-1231 RETRANSMISSION
C8
REDRAWN THIS SHEET IN MICROSTATION
THIS DRAWING CONTAINS INFORMATION PROPRIETARY TO CITI, LLC., IT IS SUBMITTED IN CONFIDENCE AND IS TO BE USED SOLELY FOR THE PURPOSE FOR WHICH IT IS FURNISHED AND RETURNED UPON REQUEST. THIS DRAWING AND SUCH INFORMATION IS NOT TO BE REPRODUCED, TRANSMITTED, DISCLOSED OR USED OTHERWISE IN WHOLE OR IN PART WITHOUT THE WRITTEN AUTHORIZATION OF CITI, LLC.
B 8-4-05 AS BUILT JD
A 8-1-05 FOR CONSTRUCTION JD
REV DATE DESCRIPTION BY
CITI, LLC
Charlotte, North Carolina
WSRC
PO# AC47575A
SCALE NONE
DRAWN BY JMD
ENDRESS & HAUSER RIA-250 DISPLAY PANEL (LI-1226, 1228,1229,1231) LAYOUT & FABRICATION
ORDERED EA
DATE 8-1-05
DRAWING PATH I:\DWGS\205097
DRAWING NUMBER RIA-250
AS FOUND
Design Change Notice (DCN) Continuation Page
DCP No. M-DCP-Z-11003
Revision 1
Document No. AC47575A-000001
Revision A
DCN No. M-DCP-Z-11003-J-00019
Revision 0
Project/Task No. N/A
Page 6 of 7

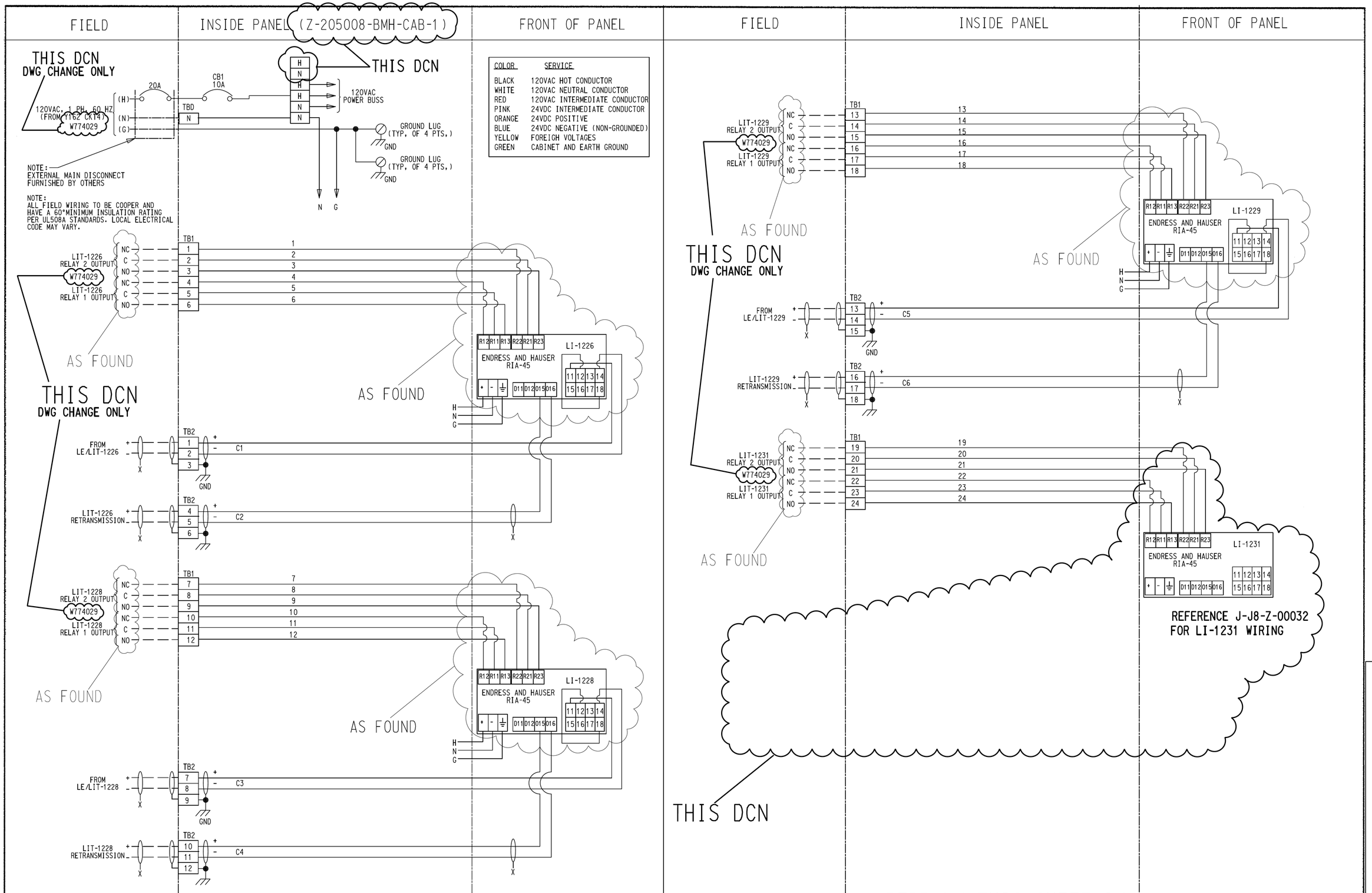

REV	DATE	DESCRIPTION	BY
B	8-4-05	AS BUILT	JD
A	8-1-05	FOR CONSTRUCTION	JD

THIS DRAWING CONTAINS INFORMATION PROPRIETARY TO CITI, LLC., IT IS SUBMITTED IN CONFIDENCE AND IS TO BE USED SOLELY FOR THE PURPOSE FOR WHICH IT IS FURNISHED AND RETURNED UPON REQUEST. THIS DRAWING AND SUCH INFORMATION IS NOT TO BE REPRODUCED, TRANSMITTED, DISCLOSED OR USED OTHERWISE IN WHOLE OR IN PART WITHOUT THE WRITTEN AUTHORIZATION OF CITI, LLC.

CITI, LLC
Charlotte, North Carolina

WSRC
PO# AC47575A

SCALE: NONE
DRAWN BY: JMD
CHECKED: EA

ENDRESS & HAUSER RIA-250 DISPLAY PANEL (LI-1226, 1228.1229,1231) LAYOUT & FABRICATION

DATE: 8-1-05
DRAWING PATH: I:\DWGS\205097
DRAWING NUMBER: RIA-250

Design Change Notice (DCN)
Continuation Page

AFTER

DCP No. M-DCP-Z-11003	Revision 1	Document No. AC47575A-000001	Revision A
DCN No. M-DCP-Z-11003-J-00019	Revision 0	Project/Task No. N/A	Page 7 of 7

N/A

SRP DRAWING NO.

SALTSTONE CONTROL ROOM (LOS-302)

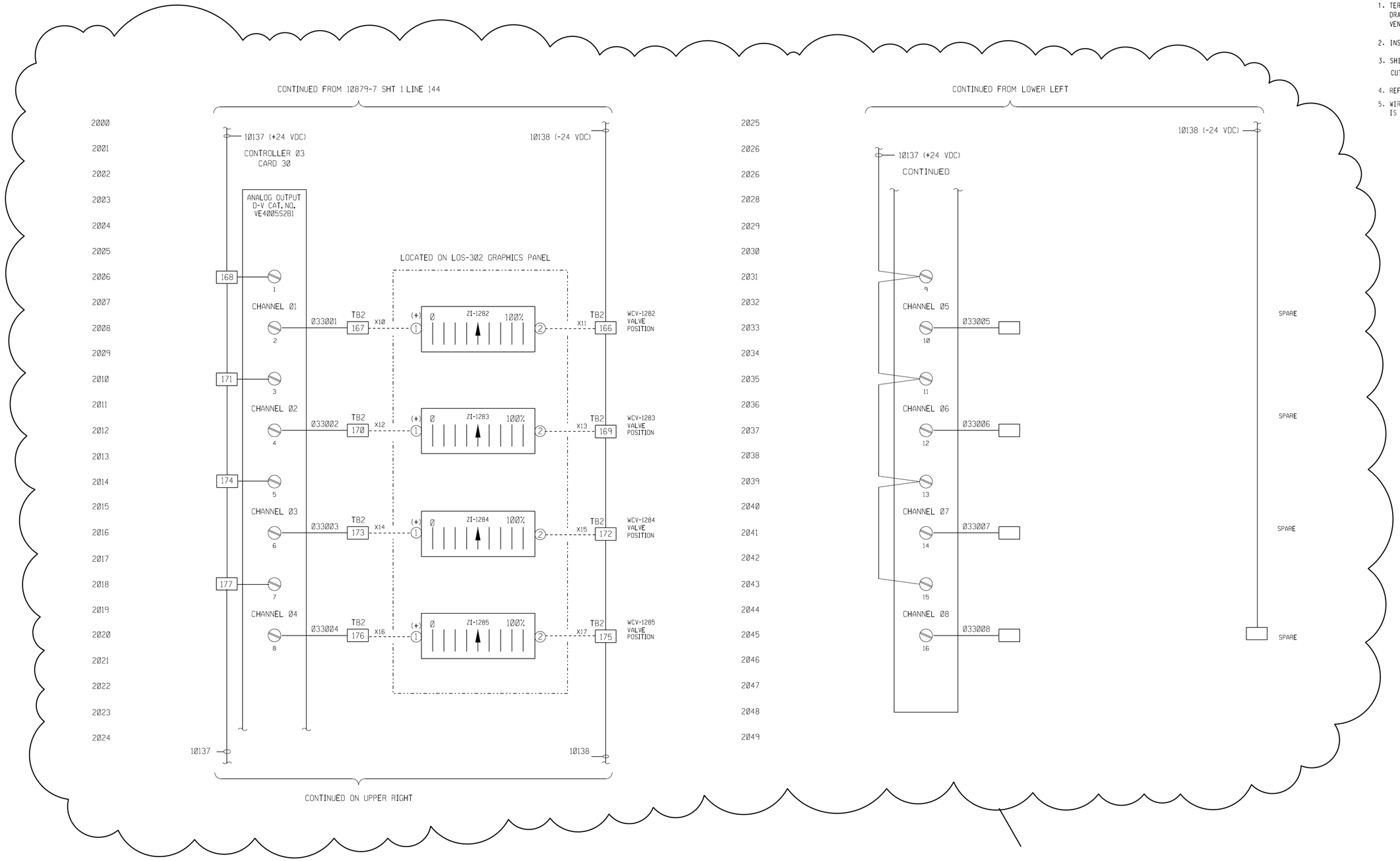

NOTES

1. TERMINATION POINTS ARE SHOWN SCHEMATICALLY ON THIS DRAWING. FOR CONFIGURATION OF TERMINATION POINTS, SEE VENDOR PRINTS OF THE PARTICULAR DEVICE.
2. INSTRUMENT NUMBERS ARE PRECEDED WITH Z210000-BMH
3. SHIELDS ARE COMMONLY GROUNDED AT THE I/O CARD ONLY. CUT SHIELD AND TAPE FIELD END.
4. REFER TO LOS-302 INTERFACE DRAWINGS IN FILE AC52406A
5. WIRING FROM LOS-302 TERMINAL BLOCKS TO GRAPHICS PANEL IS #16 TWSP.

REMOVE HOLD

INTERIM DRAWING

J JQ Z 00037 B (LATEST REVISION)

PROJ.	REV. NO.	REVISION	INITIAL AND DATE: PRP'D	LEAD ENG	CHK'D/VERIF'D	APRV'D	APRV'D	APRV'D
N/A	B	INTERIM DRAWING FOR M-OCP-Z-11003	APPROVALS MAINTAINED IN DCR/EDWS					

THIS DRAWING HAS BEEN FURNISHED BY THE SAVANNAH RIVER SITE. THE INFORMATION AND KNOW HOW THEREON MAY NOT BE USED NOR THE DRAWING REPRODUCED WITHOUT WRITTEN PERMISSION OF THE PRIME CONTRACTOR. ALL REPRODUCTIONS IN WHOLE OR IN PART, INCLUDING VENDOR'S SHOP DRAWINGS, SHALL BEAR OR REFER TO THIS STAMP.

REFERENCE DRAWINGS

W754524	PREMIX BLENDING AND CONVEY P&ID
AC52405A-6A	CONTROL PANEL LAYOUT
AC52405A-8A	TERMINAL STRIP LAYOUT
AC 52405A-4G	FIELD WIRING AND PIPING DIAGRAM

REFERENCE STANDARDS

UNITED STATES DEPARTMENT OF ENERGY

SAVANNAH RIVER SITE

BLDG. NO.	SITE CLEARANCE NO.	DESIGN AREA NO.	DESIGN GROUP
210-Z	N/A	Z210	PD&CS

TITLE

CBU WASTE SOLIDIFICATION PROJECTS
SALTSTONE FACILITY
PREMIX BLENDING AND CONVEYING SYSTEM

WI-1282, WI-1283, WI-1284 AND WI-1285
LOS-302 I/O WIRING- DCS OUTPUTS
(U)

SCALE	SRP DRAWING NO.	SHEET NO.	LATEST REVISION
N/A	N/A	1 OF 1	B

W.S. ■ ( ) . REF FILES YES NO

LEVELS 1111111111222222222333333333344444444455555555556666 1234567890123456789012345678901234567890123456789012345678901 23

PSC• PLOT DATE TIME

DRAWN BY (ORIG): K. ASMBY LAST CADD REV. BY: D.H. DAY DATE: 07-31-12

Scale shown on this drawing is only applicable when plotted at 30"x42" (actual drawing size)

Page 5 rev. 08/15/07

N/A

SHP DRAWING NO.

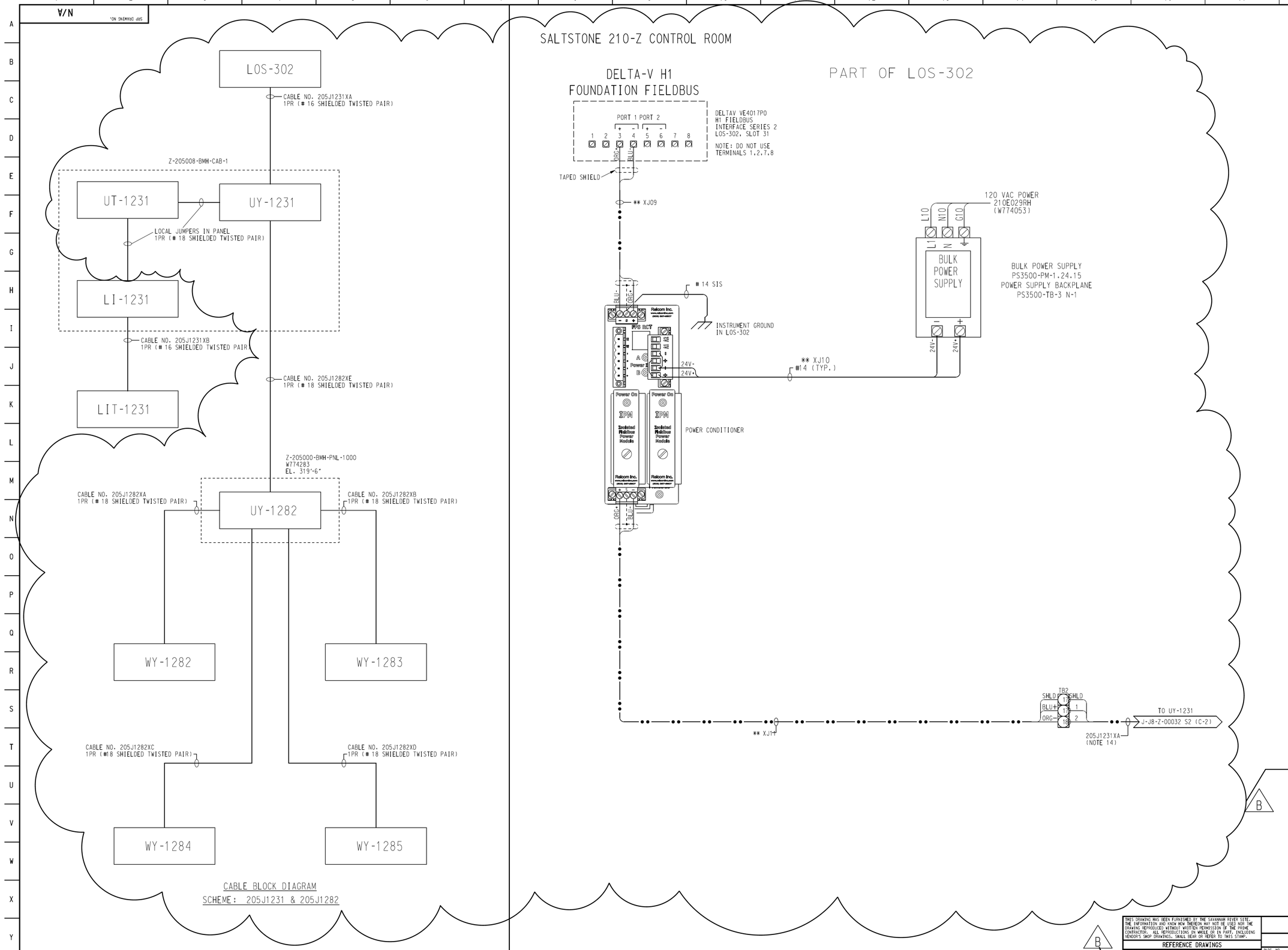

CABLE BLOCK DIAGRAM
SCHEME: 205J1231 & 205J1282

NOTES

1. ALL SEGMENT COMPONENTS SUCH AS UY, TEES, JX, AND JY ARE PRECEDED BY "Z-210000-PCS-". ALL OTHER INSTRUMENTS ARE PREFIXED BY "Z-210000--XXX", WHERE "XXX" IS THE SYSTEM DESIGNATOR INDICATED ON THE REFERENCED P&ID OR DATA SHEET.
2. CABLE AND JUMPER PREFIX IS AS FOLLOWS UNLESS NOTED OTHERWISE:
   $ 205J1231--
   * 205J1282--
   ** 210J006--
3. ALL FFB CABLES ARE ONE TWISTED PAIR # 18 WITH SHIELD (BELDEN 3076F).
4. TERMINATORS FOR THIS SEGMENT ARE BUILT INTO BRICK UY-1282 AND POWER CONDITIONER AS SHOWN.
5. SEE SEGMENT LOADING CALCULATIONS FOR LENGTHS, VOLTAGE DROPS, CAPACITY, ETC.
6. SHIELD WIRES ARE CUTBACK AND TAPED AS SHOWN.
7. PORTION OF LCS-302 SHOWN IS PART OF A VENDOR SUPPLIED PLC FURNISHED UNDER PURCHASE ORDER AC52406A BY NOL-TEC SYSTEMS.
8. FOR FIELD CABLE INFORMATION, CONSULT PDMS ASSOCIATED WITH THIS DRAWING.
9. POWER CONDITIONER IS USED AS PRIMARY SHIELD GROUND POINT FOR FIELDBUS WIRING INSTEAD OF CARRIER BAR ON LCS-302 BACKPLANE.
10. FIELDBUS CABLE COLORS SHOWN AS "ORG" AND "BLU" MAY BE INSTALLED AS OTHER COLORS DEPENDING ON CABLE PURCHASED.
11. NO FIELDBUS JUMPER TO BE SHORTER THAN 42 INCHES BETWEEN FIELDBUS DEVICES. TERMINAL POINTS ARE NOT "DEVICES."
12. RADAR LEVEL TRANSMITTER LIT-1231 AND LOCAL INDICATOR LI-1231 SEE J-JD-Z-00033.
13. SEE DRAWING W774029 FOR WIRING TO LEVEL INDICATOR ENCLOSURE Z-205008-BMH-CAB-1.
14. THIS IS AN EXISTING 1 PR # 16 TWSH INSTRUMENTATION CABLE THAT HAS BEEN REWORKED IN ORDER TO USE IT AS A FIELDBUS CABLE.

LEGEND

- FFB COMMUNICATION/ POWER BUS WIRING
- SIGNAL, AC, OR DC WIRING
- EQUIPMENT GROUND
- INSTRUMENT GROUND

WIRING COLOR ABBREVIATIONS

BRN BROWN	ORG ORANGE
BLU BLUE	RED RED
BLK BLACK	WHT WHITE

REMOVE HOLD

INTERIM DRAWING

J J8 Z 00032 LATEST B REVISION

THIS DRAWING WAS DEPENDED BY THE SAVANNAH RIVER SITE. THE INFORMATION AND KNOW HOW THEREON MAY NOT BE USED NOR THE DRAWING REPRODUCED WITHOUT WRITTEN PERMISSION OF THE PRIME CONTRACTOR. ALL REPRODUCTIONS IN WHOLE OR IN PART, INCLUDING VENDOR'S SHOP DRAWINGS, SHALL BEAR OR REFER TO THIS STAMP.

REFERENCE DRAWINGS

W754524	P&ID
J-J4-Z-00014	LOOP DIAGRAM
AC52405A-6A	CONTROL PANEL LAYOUT
AC52405A-8A	TERMINAL STRIP LAYOUT
AC52405A-40	FIELD WIRING AND PIPING
W774283	UNLOADING AREA STORAGE SILO EXPOSED RACEWAY AND PLANS
AC47575A-001	SILO LEVEL PNL LAYOUT

REFERENCE STANDARDS

UNITED STATES DEPARTMENT OF ENERGY
SAVANNAH RIVER SITE

BLDG. NO.	SITE CLEARANCE NO.	DESIGN AREA NO.	DESIGN GROUP
210Z	N/A	NA	PD&CS

TITLE

Z AREA
SALTSTONE PROCESSING FACILIITY

WY1282, 1283, 1284, AND 1285 SEGMENT DWG
INSTRUMENTATION AND CONTROLS

(U)

SCALE	SHP DRAWING NO.	SHEET NO.	LATEST REVISION
N/A	N/A	1 OF 3	B

PROJ.	REV. NO.	REVISION	INITIAL AND DATE: PRP'D	LEAD ENG	CHK'D/VERIF'D	APRV'D	APRV'D	APRV'D
N/A	B	INTERIM DRAWING FOR M-DCP-Z-11003	APPROVALS	MAINTAINED	N DCR/EDWS			

Tips 5 rev. 08/15/07

W.S. ■ [ ] - REF FILES YES NO

LEVELS 1234567890123456789012345678901234567890123456789012345678901234567890123

PSC= PLOT DATE

DRAWN BY (ORIG): H von Beck LAST CADD REV. BY: TIME DATE:

Scale shown on this drawing is only applicable when plotted at 30"x42" (actual drawing size)

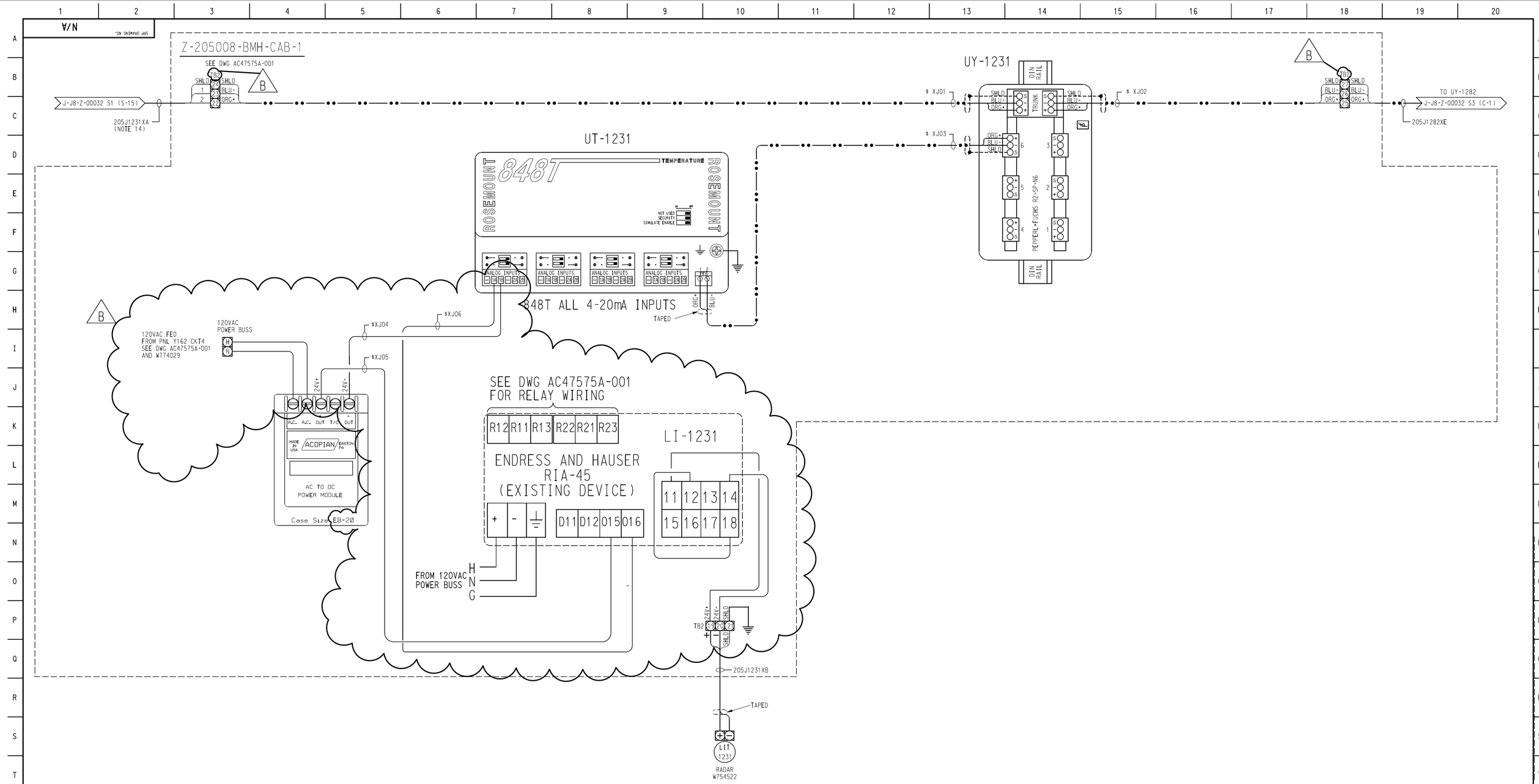

4-20mA INPUT DETAIL VIEW

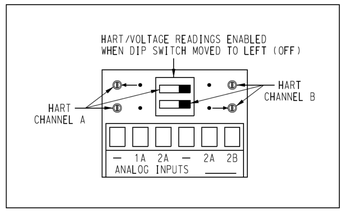

INTERIM DRAWING

UNITED STATES DEPARTMENT OF ENERGY

SAVANNAH RIVER SITE

THIS DRAWING HAS BEEN FURNISHED BY THE SAVANNAH RIVER SITE. THE INFORMATION AND KNOW HOW THEREON MAY NOT BE USED NOR THE DRAWING REPRODUCED WITHOUT WRITTEN PERMISSION OF THE PRIME CONTRACTOR. ALL REPRODUCTIONS IN WHOLE OR IN PART, INCLUDING VENDOR'S SHOP DRAWINGS, SHALL BEAR OR REFER TO THIS STAMP.

TITLE

Z AREA
SALTSTONE PROCESSING FACILITY
WY1282, 1283, 1284, AND 1285
SEGMENT DRAWING
INSTRUMENTATION AND CONTROLS

J J8 Z 00032

SRP DRAWING NO.	SHEET NO.	DRAWING REV.
N/A	2 OF 3	B

W.S. ■ I REF FILES YES NO

LEVELS 1234567890123456789012345678901234567890123456789012345678901234567890123

PSC= PLOT DATE TIME

DRAWN BY (ORIG): H von Beck LAST CADD REV. BY: DATE:

Scale shown on this drawing is only applicable when plotted at 30"x42" (actual drawing size)

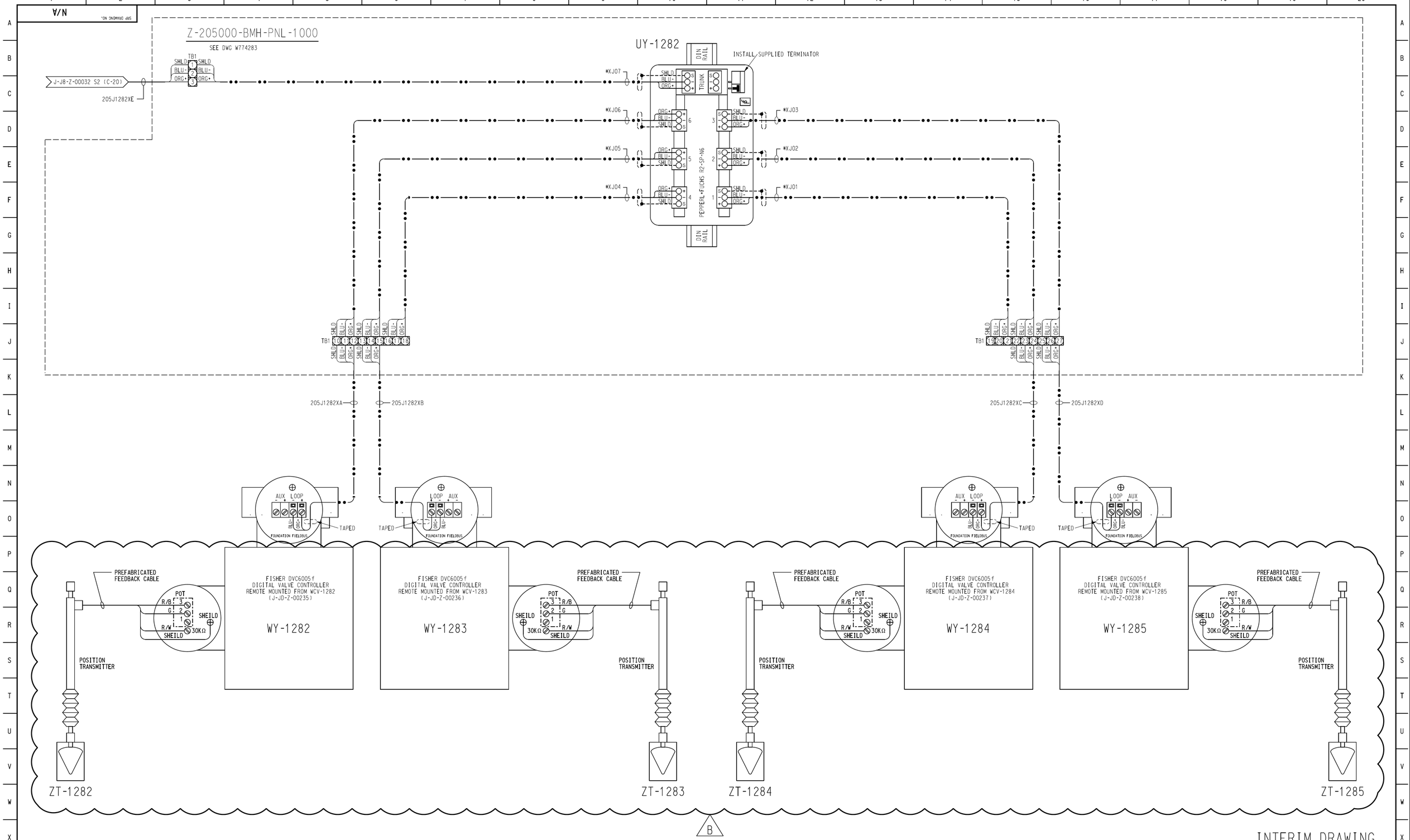

INTERIM DRAWING

UNITED STATES DEPARTMENT OF ENERGY

SAVANNAH RIVER SITE

THIS DRAWING HAS BEEN FURNISHED BY THE SAVANNAH RIVER SITE. THE INFORMATION AND KNOW HOW THEREON MAY NOT BE USED NOR THE DRAWING REPRODUCED WITHOUT WRITTEN PERMISSION OF THE PRIME CONTRACTOR. ALL REPRODUCTIONS IN WHOLE OR IN PART, INCLUDING VENDOR'S SHOP DRAWINGS, SHALL BEAR OR REFER TO THIS STAMP.

TITLE

Z AREA
SALTSTONE PROCESSING FACILITY
WY1282,1283,1284 AND 1285
SEGMENT DRAWING
INSTRUMENTATION AND CONTROLS

J | J8 | Z | 00032

SRP DRAWING NO.	SHEET NO.	DRAWING REV.
N/A	3 OF 3	B

W.S. ■ [ ] -
REF FILES YES NO

LEVELS 1111111111222222222333333333444444444555555555666666 1234567890123456789012345678901234567890123456789012345678901234567890123

PSC=
PLOT DATE
TIME

DRAWN BY (ORIG): H von Beck
DATE:

LAST CADD REV. BY:

Scale shown on this drawing is only applicable when plotted at 30"x42" (actual drawing size)

THIS DRAWING HAS BEEN FURNISHED BY THE SAVANNAH RIVER SITE. THE INFORMATION AND KNOW HOW THERON MAY NOT BE USED NOR THE DRAWING REPRODUCDED WITHOUT THE WRITTEN PERMISSION OF THE PRIME CONTRACTOR. ALL REPRODUCTIONS IN WHOLE OR IN PART, INCLUDING VENDOR'S SHOP DRAWINGS, SHALL BEAR OR REFER TO THIS STAMP.

SALTSTONE

INSTRUMENT SCALING AND

SETPOINT DOCUMENT

Z205-ZZZZ-1282

SILO #4 FLOW CONTROL DISCHARGE VALVE POSITION

INTERIM DRAWING

Approvals Maintained in DCR/EDWS

PROJECT	REV	DATE	REVISION DESCRIPTION	PRP'D	LEAD ENG	CHK'D	APRV'D	APRV'D	AUTHENTICATOR
N/A	A	SPF	**Interim Drawing for M-DCP-Z-11003 Rev 1**	Paul Farrow	Wes Williamson			Rudy Jolly	

DA No: N/A	BLDG No. 210-Z	DESIGN GROUP: DWPF-E

UNITED STATES DEPARTMENT OF ENERGY

J JZ Z 00308

SRS DRAWING No.	REV.
N/A	A

PAGE 1 OF 4

Scaling Computation

Loop: Z205-ZZZZ-1282
SILO #4 FLOW CONTROL DISCHARGE VALVE POSITION

REFERENCES:

P&ID: W754524
Segment Diagram: J-J8-Z-00032
Data sheet: J-JD-Z-00235
I/O Wiring: J-JQ-Z-00037

ASSUMPTIONS: Range = 0 to 100 %

BASIS: ( ) Check if TSR requirement (state the requirement)

This loop provides valve position indication.

METHOD: Linear interpolation.

CALCULATIONS:

Scaling Function - Equation 1 (Linear)

$$OUTPUT = \left[\frac{INPUT - Inlow}{Inhigh - Inlow} x\,(Outhigh - Outlow) \right] + Outlow$$

Where: (For any device or loop)

INPUT = Any selected input value
OUTPUT = Output value corresponding to the selected INPUT
Inlow = Input scale zero value
Inhigh = Input scale maximum value
Outlow = Output scale zero value
Outhigh = Output scale maximum value

Loop Accuracy Computation - Equation 2

$$LOOP\ ACCURACY = \sqrt{Acc\,1^2 + Acc\,2^2 + Acc\,3^2 + \ldots}$$

Where:

Acc1, Acc2, Acc3, ... Represent accuracy of devices 1, 2, 3, ...

LOOP RESPONSE TIME: N/A

ATTACHMENTS: None

Scaling Computation

Loop: Z205-ZZZZ-1282
SILO #4 FLOW CONTROL DISCHARGE VALVE POSITION

Instrument Scaling Calculations:

Substituting the following INPUT values in Equation 1, these OUTPUT values are arrived at:

Z-205000-BMH-WCV-1282		DCS		Z-205000-BMH-ZI-1282	
INPUT % Position	OUTPUT DIGITAL	INPUT DIGITAL	OUTPUT mADC	INPUT mADC	DISPLAY % Position
0			4.00	4.00	0
25			8.00	8.00	25
50	Fieldbus	Fieldbus	12.00	12.00	50
75			16.00	16.00	75
100			20.00	20.00	100

NOTES: 1) Z-205000-BMH-WCV-1282 includes the position transmitter (ZT-1282) and the positioner.
2) Valve Closed = 0%, Valve Open = 100%
3) DCS accuracy includes input and output errors.

Calibration accuracy for: WCV-1282 = ±5.00%
DCS = ±0.25%
ZI-1282 = ±2.00% of Span

Loop Accuracy: Z-205000-BMH-WCV-1282 to Z-205000-BMH-ZI-1282

$$LOOP\ ACCURACY = \sqrt{5.00^2 + 0.25^2 + 2.00^2}$$

$$= \pm 5.39\%$$

EGU: 0 to 100
EGUTAG: %

Loop Accuracy: Z-205000-BMH-WCV-1282 to Z-205000-BMH-ZI-1282 = ±5.39%
Required Accuracy: Z-205000-BMH-WCV-1282 to Z-205000-BMH-ZI-1282 = ±6.39%

SETPOINTS: None

Scaling Required Accuracy Evaluation

Loop: Z205-ZZZZ-1282
SILO #4 FLOW CONTROL DISCHARGE VALVE POSITION

END OF LOOP RANGE: 0 to 100 %

INSTRUMENT: Z-205000-BMH-WCV-1282 to Z-205000-BMH-ZI-1282

Taking the following items into consideration, will drift of the loop calibration have any adverse or limiting effects?

	Y/N
1. Will an operating limit be affected?	__N__
2. Does the operator use the indication to control the process?	__Y__
3. Does the instrument loop control the process?	__N__
4. Does the loop have interlocks?	__N__
5. Will any chemical reactions be affected?	__N__
6. Could product quality be affected?	__N__
7. Must drift in one direction be more restricted than the other?	__N__

If any of the above items are answered "YES", the percent deviation allowable is limited to 1% greater than the Loop Accuracy, unless the Cognizant Engineer specifies an alternate value.

If none of the above items are answered "YES", and no other limiting condition exists, the percent deviation allowable is limited to 2% greater than the Loop Accuracy, unless the Cognizant Engineer specifies an alternate value.

If some other percent deviation or accuracy value is required, explain below with references.

Loop accuracy = ±5.39%

Evaluate the point at which an adverse condition could occur, then determine the Required Accuracy.

% Required Accuracy: (+ Percent Deviation) + Loop Accuracy = +6.39%

(- Percent Deviation) - Loop Accuracy = -6.39%

THIS DRAWING HAS BEEN FURNISHED BY THE SAVANNAH RIVER SITE. THE INFORMATION AND KNOW HOW THERON MAY NOT BE USED NOR THE DRAWING REPRODUCDED WITHOUT THE WRITTEN PERMISSION OF THE PRIME CONTRACTOR. ALL REPRODUCTIONS IN WHOLE OR IN PART, INCLUDING VENDOR'S SHOP DRAWINGS, SHALL BEAR OR REFER TO THIS STAMP.

SALTSTONE

INSTRUMENT SCALING AND

SETPOINT DOCUMENT

Z205-ZZZZ-1283

SILO #1 FLOW CONTROL DISCHARGE VALVE POSITION

INTERIM DRAWING

Approvals Maintained in DCR/EDWS

PROJECT	REV	DATE	REVISION DESCRIPTION	PRP'D	LEAD ENG	CHK'D	APRV'D	APRV'D	AUTHENTICATOR
N/A	A	SPF	**Interim Drawing for M-DCP-Z-11003 Rev 1**	Paul Farrow	Wes Williamson			Rudy Jolly	

DA No: N/A	BLDG No. 210-Z	DESIGN GROUP: DWPF-E

UNITED STATES DEPARTMENT OF ENERGY

J JZ Z 00309

SRS DRAWING No.	REV.
N/A	A

PAGE 1 OF 4

Scaling Computation

Loop: Z205-ZZZZ-1283
SILO #1 FLOW CONTROL DISCHARGE VALVE POSITION

REFERENCES:

P&ID: W754524
Segment Diagram: J-J8-Z-00032
Data sheet: J-JD-Z-00236
I/O Wiring: J-JQ-Z-00037

ASSUMPTIONS: Range = 0 to 100 %

BASIS: ( ) Check if TSR requirement (state the requirement)

This loop provides valve position indication.

METHOD: Linear interpolation.

CALCULATIONS:

Scaling Function - Equation 1 (Linear)

$$OUTPUT = \left[\frac{INPUT - Inlow}{Inhigh - Inlow} x\,(Outhigh - Outlow) \right] + Outlow$$

Where: (For any device or loop)

INPUT = Any selected input value
OUTPUT = Output value corresponding to the selected INPUT
Inlow = Input scale zero value
Inhigh = Input scale maximum value
Outlow = Output scale zero value
Outhigh = Output scale maximum value

Loop Accuracy Computation - Equation 2

$$LOOP\ ACCURACY = \sqrt{Acc1^2 + Acc2^2 + Acc3^2 + ...}$$

Where:

Acc1, Acc2, Acc3, ... Represent accuracy of devices 1, 2, 3, ...

LOOP RESPONSE TIME: N/A

ATTACHMENTS: None

Scaling Computation

Loop: Z205-ZZZZ-1283
SILO #1 FLOW CONTROL DISCHARGE VALVE POSITION

Instrument Scaling Calculations:

Substituting the following INPUT values in Equation 1, these OUTPUT values are arrived at:

Z-205000-BMH-WCV-1283		DCS		Z-205000-BMH-ZI-1283	
INPUT % Position	OUTPUT DIGITAL	INPUT DIGITAL	OUTPUT mADC	INPUT mADC	DISPLAY % Position
0			4.00	4.00	0
25			8.00	8.00	25
50	Fieldbus	Fieldbus	12.00	12.00	50
75			16.00	16.00	75
100			20.00	20.00	100

NOTES: 1) Z-205000-BMH-WCV-1283 includes the position transmitter (ZT-1283) and the positioner.
2) Valve Closed = 0%, Valve Open = 100%
3) DCS accuracy includes input and output errors.

Calibration accuracy for: WCV-1283 = ±5.00%
DCS = ±0.25%
ZI-1283 = ±2.00% of Span

Loop Accuracy: Z-205000-BMH-WCV-1283 to Z-205000-BMH-ZI-1283

$$LOOP\ ACCURACY = \sqrt{5.00^2 + 0.25^2 + 2.00^2}$$

$$= \pm 5.39\%$$

EGU: 0 to 100
EGUTAG: %

Loop Accuracy: Z-205000-BMH-WCV-1283 to Z-205000-BMH-ZI-1283 = ±5.39%
Required Accuracy: Z-205000-BMH-WCV-1283 to Z-205000-BMH-ZI-1283 = ±6.39%

SETPOINTS: None

Scaling Required Accuracy Evaluation

Loop: Z205-ZZZZ-1283
SILO #1 FLOW CONTROL DISCHARGE VALVE POSITION

END OF LOOP RANGE: 0 to 100 %

INSTRUMENT: Z-205000-BMH-WCV-1283 to Z-205000-BMH-ZI-1283

Taking the following items into consideration, will drift of the loop calibration have any adverse or limiting effects?

	Y/N
1. Will an operating limit be affected?	__N__
2. Does the operator use the indication to control the process?	__Y__
3. Does the instrument loop control the process?	__N__
4. Does the loop have interlocks?	__N__
5. Will any chemical reactions be affected?	__N__
6. Could product quality be affected?	__N__
7. Must drift in one direction be more restricted than the other?	__N__

If any of the above items are answered "YES", the percent deviation allowable is limited to 1% greater than the Loop Accuracy, unless the Cognizant Engineer specifies an alternate value.

If none of the above items are answered "YES", and no other limiting condition exists, the percent deviation allowable is limited to 2% greater than the Loop Accuracy, unless the Cognizant Engineer specifies an alternate value.

If some other percent deviation or accuracy value is required, explain below with references.

Loop accuracy = ±5.39%

Evaluate the point at which an adverse condition could occur, then determine the Required Accuracy.

% Required Accuracy: (+ Percent Deviation) + Loop Accuracy = +6.39%

(- Percent Deviation) - Loop Accuracy = -6.39%

THIS DRAWING HAS BEEN FURNISHED BY THE SAVANNAH RIVER SITE. THE INFORMATION AND KNOW HOW THERON MAY NOT BE USED NOR THE DRAWING REPRODUCDED WITHOUT THE WRITTEN PERMISSION OF THE PRIME CONTRACTOR. ALL REPRODUCTIONS IN WHOLE OR IN PART, INCLUDING VENDOR'S SHOP DRAWINGS, SHALL BEAR OR REFER TO THIS STAMP.

SALTSTONE

INSTRUMENT SCALING AND

SETPOINT DOCUMENT

Z205-ZZZZ-1284

SILO #2 FLOW CONTROL DISCHARGE VALVE POSITION

INTERIM DRAWING

Approvals Maintained in DCR/EDWS

PROJECT	REV	DATE	REVISION DESCRIPTION	PRP'D	LEAD ENG	CHK'D	APRV'D	APRV'D	AUTHENTICATOR
N/A	A	SPF	**Interim Drawing for M-DCP-Z-11003 Rev 1**	Paul Farrow	Wes Williamson			Rudy Jolly	

DA No: N/A	BLDG No. 210-Z	DESIGN GROUP: DWPF-E

UNITED STATES DEPARTMENT OF ENERGY

J JZ Z 00310

SRS DRAWING No.	REV.
N/A	A

PAGE 1 OF 4

Scaling Computation

Loop: Z205-ZZZZ-1284
SILO #2 FLOW CONTROL DISCHARGE VALVE POSITION

REFERENCES:

P&ID: W754524
Segment Diagram: J-J8-Z-00032
Data sheet: J-JD-Z-00237
I/O Wiring: J-JQ-Z-00037

ASSUMPTIONS: Range = 0 to 100 %

BASIS: ( ) Check if TSR requirement (state the requirement)

This loop provides valve position indication.

METHOD: Linear interpolation.

CALCULATIONS:

Scaling Function - Equation 1 (Linear)

$$OUTPUT = \left[\frac{INPUT - Inlow}{Inhigh - Inlow} x\,(Outhigh - Outlow) \right] + Outlow$$

Where: (For any device or loop)

INPUT = Any selected input value
OUTPUT = Output value corresponding to the selected INPUT
Inlow = Input scale zero value
Inhigh = Input scale maximum value
Outlow = Output scale zero value
Outhigh = Output scale maximum value

Loop Accuracy Computation - Equation 2

$$LOOP\ ACCURACY = \sqrt{Acc\,1^2 + Acc\,2^2 + Acc\,3^2 + \ldots}$$

Where:

Acc1, Acc2, Acc3, ... Represent accuracy of devices 1, 2, 3, ...

LOOP RESPONSE TIME: N/A

ATTACHMENTS: None

Scaling Computation

Loop: Z205-ZZZZ-1284
SILO #2 FLOW CONTROL DISCHARGE VALVE POSITION

Instrument Scaling Calculations:

Substituting the following INPUT values in Equation 1, these OUTPUT values are arrived at:

Z-205000-BMH-WCV-1284		DCS		Z-205000-BMH-ZI-1284	
INPUT % Position	OUTPUT DIGITAL	INPUT DIGITAL	OUTPUT mADC	INPUT mADC	DISPLAY % Position
0			4.00	4.00	0
25			8.00	8.00	25
50	Fieldbus	Fieldbus	12.00	12.00	50
75			16.00	16.00	75
100			20.00	20.00	100

NOTES: 1) Z-205000-BMH-WCV-1284 includes the position transmitter (ZT-1284) and the positioner.
2) Valve Closed = 0%, Valve Open = 100%
3) DCS accuracy includes input and output errors.

Calibration accuracy for: WCV-1284 = ±5.00%
DCS = ±0.25%
ZI-1284 = ±2.00% of Span

Loop Accuracy: Z-205000-BMH-WCV-1284 to Z-205000-BMH-ZI-1284

$$LOOP\ ACCURACY = \sqrt{5.00^2 + 0.25^2 + 2.00^2}$$

$$= \pm 5.39\%$$

EGU: 0 to 100
EGUTAG: %

Loop Accuracy: Z-205000-BMH-WCV-1284 to Z-205000-BMH-ZI-1284 = ±5.39%
Required Accuracy: Z-205000-BMH-WCV-1284 to Z-205000-BMH-ZI-1284 = ±6.39%

SETPOINTS: None

Scaling Required Accuracy Evaluation

Loop: Z205-ZZZZ-1284
SILO #2 FLOW CONTROL DISCHARGE VALVE POSITION

END OF LOOP RANGE: 0 to 100 %

INSTRUMENT: Z-205000-BMH-WCV-1284 to Z-205000-BMH-ZI-1284

Taking the following items into consideration, will drift of the loop calibration have any adverse or limiting effects?

	Y/N
1. Will an operating limit be affected?	__N__
2. Does the operator use the indication to control the process?	__Y__
3. Does the instrument loop control the process?	__N__
4. Does the loop have interlocks?	__N__
5. Will any chemical reactions be affected?	__N__
6. Could product quality be affected?	__N__
7. Must drift in one direction be more restricted than the other?	__N__

If any of the above items are answered "YES", the percent deviation allowable is limited to 1% greater than the Loop Accuracy, unless the Cognizant Engineer specifies an alternate value.

If none of the above items are answered "YES", and no other limiting condition exists, the percent deviation allowable is limited to 2% greater than the Loop Accuracy, unless the Cognizant Engineer specifies an alternate value.

If some other percent deviation or accuracy value is required, explain below with references.

Loop accuracy = ±5.39%

Evaluate the point at which an adverse condition could occur, then determine the Required Accuracy.

% Required Accuracy: (+ Percent Deviation) + Loop Accuracy = +6.39%

(- Percent Deviation) - Loop Accuracy = -6.39%

THIS DRAWING HAS BEEN FURNISHED BY THE SAVANNAH RIVER SITE. THE INFORMATION AND KNOW HOW THERON MAY NOT BE USED NOR THE DRAWING REPRODUCDED WITHOUT THE WRITTEN PERMISSION OF THE PRIME CONTRACTOR. ALL REPRODUCTIONS IN WHOLE OR IN PART, INCLUDING VENDOR'S SHOP DRAWINGS, SHALL BEAR OR REFER TO THIS STAMP.

SALTSTONE

INSTRUMENT SCALING AND

SETPOINT DOCUMENT

Z205-ZZZZ-1285

SILO #3 FLOW CONTROL DISCHARGE VALVE POSITION

INTERIM DRAWING

Approvals Maintained in DCR/EDWS

PROJECT	REV	DATE	REVISION DESCRIPTION	PRP'D	LEAD ENG	CHK'D	APRV'D	APRV'D	AUTHENTICATOR
N/A	A	SPF	**Interim Drawing for M-DCP-Z-11003 Rev 1**	Paul Farrow	Wes Williamson			Rudy Jolly	

DA No: N/A	BLDG No. 210-Z	DESIGN GROUP: DWPF-E

UNITED STATES DEPARTMENT OF ENERGY

J JZ Z 00311

SRS DRAWING No.	REV.
N/A	A

PAGE 1 OF 4

Scaling Computation

Loop: Z205-ZZZZ-1285
SILO #3 FLOW CONTROL DISCHARGE VALVE POSITION

REFERENCES:

P&ID: W754524
Segment Diagram: J-J8-Z-00032
Data sheet: J-JD-Z-00238
I/O Wiring: J-JQ-Z-00037

ASSUMPTIONS: Range = 0 to 100 %

BASIS: ( ) Check if TSR requirement (state the requirement)

This loop provides valve position indication.

METHOD: Linear interpolation.

CALCULATIONS:

Scaling Function - Equation 1 (Linear)

$$OUTPUT = \left[\frac{INPUT - Inlow}{Inhigh - Inlow} x\,(Outhigh - Outlow) \right] + Outlow$$

Where: (For any device or loop)

INPUT = Any selected input value
OUTPUT = Output value corresponding to the selected INPUT
Inlow = Input scale zero value
Inhigh = Input scale maximum value
Outlow = Output scale zero value
Outhigh = Output scale maximum value

Loop Accuracy Computation - Equation 2

$$LOOP\ ACCURACY = \sqrt{Acc\,1^2 + Acc\,2^2 + Acc\,3^2 + \ldots}$$

Where:

Acc1, Acc2, Acc3, ... Represent accuracy of devices 1, 2, 3, ...

LOOP RESPONSE TIME: N/A

ATTACHMENTS: None

Scaling Computation

Loop: Z205-ZZZZ-1285
SILO #2 FLOW CONTROL DISCHARGE VALVE POSITION

Instrument Scaling Calculations:

Substituting the following INPUT values in Equation 1, these OUTPUT values are arrived at:

Z-205000-BMH-WCV-1285		DCS		Z-205000-BMH-ZI-1285	
INPUT % Position	OUTPUT DIGITAL	INPUT DIGITAL	OUTPUT mADC	INPUT mADC	DISPLAY % Position
0			4.00	4.00	0
25			8.00	8.00	25
50	Fieldbus	Fieldbus	12.00	12.00	50
75			16.00	16.00	75
100			20.00	20.00	100

NOTES: 1) Z-205000-BMH-WCV-1285 includes the position transmitter (ZT-1285) and the positioner.
2) Valve Closed = 0%, Valve Open = 100%
3) DCS accuracy includes input and output errors.

Calibration accuracy for: WCV-1285 = ±5.00%
DCS = ±0.25%
ZI-1285 = ±2.00% of Span

Loop Accuracy: Z-205000-BMH-WCV-1285 to Z-205000-BMH-ZI-1285

$$LOOP\ ACCURACY = \sqrt{5.00^2 + 0.25^2 + 2.00^2}$$

$$= \pm 5.39\%$$

EGU: 0 to 100
EGUTAG: %

Loop Accuracy: Z-205000-BMH-WCV-1285 to Z-205000-BMH-ZI-1285 = ±5.39%
Required Accuracy: Z-205000-BMH-WCV-1285 to Z-205000-BMH-ZI-1285 = ±6.39%

SETPOINTS: None

Scaling Required Accuracy Evaluation

Loop: Z205-ZZZZ-1285
SILO #3 FLOW CONTROL DISCHARGE VALVE POSITION

END OF LOOP RANGE: 0 to 100 %

INSTRUMENT: Z-205000-BMH-WCV-1285 to Z-205000-BMH-ZI-1285

Taking the following items into consideration, will drift of the loop calibration have any adverse or limiting effects?

	Y/N
1. Will an operating limit be affected?	__N__
2. Does the operator use the indication to control the process?	__Y__
3. Does the instrument loop control the process?	__N__
4. Does the loop have interlocks?	__N__
5. Will any chemical reactions be affected?	__N__
6. Could product quality be affected?	__N__
7. Must drift in one direction be more restricted than the other?	__N__

If any of the above items are answered "YES", the percent deviation allowable is limited to 1% greater than the Loop Accuracy, unless the Cognizant Engineer specifies an alternate value.

If none of the above items are answered "YES", and no other limiting condition exists, the percent deviation allowable is limited to 2% greater than the Loop Accuracy, unless the Cognizant Engineer specifies an alternate value.

If some other percent deviation or accuracy value is required, explain below with references.

Loop accuracy = ±5.39%

Evaluate the point at which an adverse condition could occur, then determine the Required Accuracy.

% Required Accuracy: (+ Percent Deviation) + Loop Accuracy = +6.39%

(- Percent Deviation) - Loop Accuracy = -6.39%

Design Change Notice (DCN)

DCP Number	Revision	
M-DCP-Z-11003	1	
DCN No. M-DCP-Z-11003-P-00001	**Revision** 1	**Project/Task No** N/A

Design Change Notice (DCN)

Classification Reviewer: N/A

Date: 05/15/2019

Design Change Notice (DCN)

DCP Number	Revision	
M-DCP-Z-11003	1	
DCN No.	**Revision**	**Project/Task No**
M-DCP-Z-11003-P-00001	1	N/A

Document No. (Doc Rev)
MH21142-1-41;B4

Reason for Change (Be specific)
TO PROVIDE A PRECISE MEANS TO METER THE SILOS DISCHARGE INTO THE BATCH WEIGH HOPPER Z-205000-BMH-HPR-0001.

Description of Change
D&R THE SECOND 12" BUTTERFLY VALVE DOWNSTREAM OF THE AIR SLIDES. ADD NEW 12" KNIFE GATE VALVE AT THIS LOCATION. TYPICAL FOR SILOS #1, 2, 3 AND SPARE SILO #4.

Engineering Approvals

Originator	Date	Responsible Engineer Manager	Date
SIMS, BASIL H.	05/15/2019	CLARK, STEPHEN H.	05/15/2019

Verifier/Checker	Date	Discipline
MELVIN, STEVEN M.	05/15/2019	P-PLANT DESIGN

Verification Method(s)
Design Check (GS/PS only)

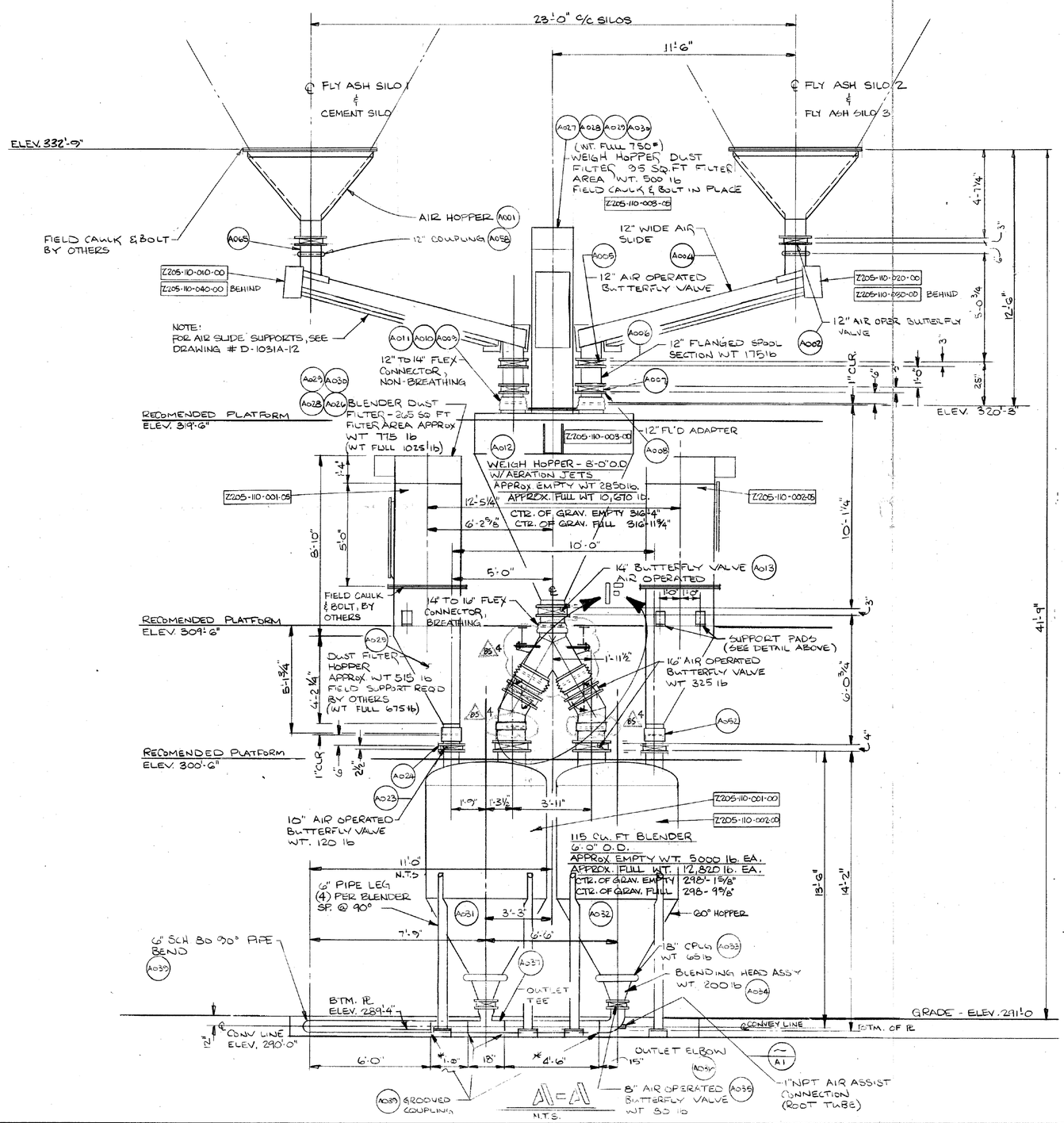

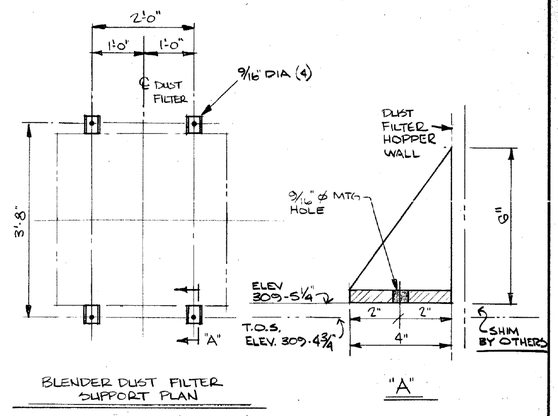

BLENDER DUST FILTER SUPPORT PLAN

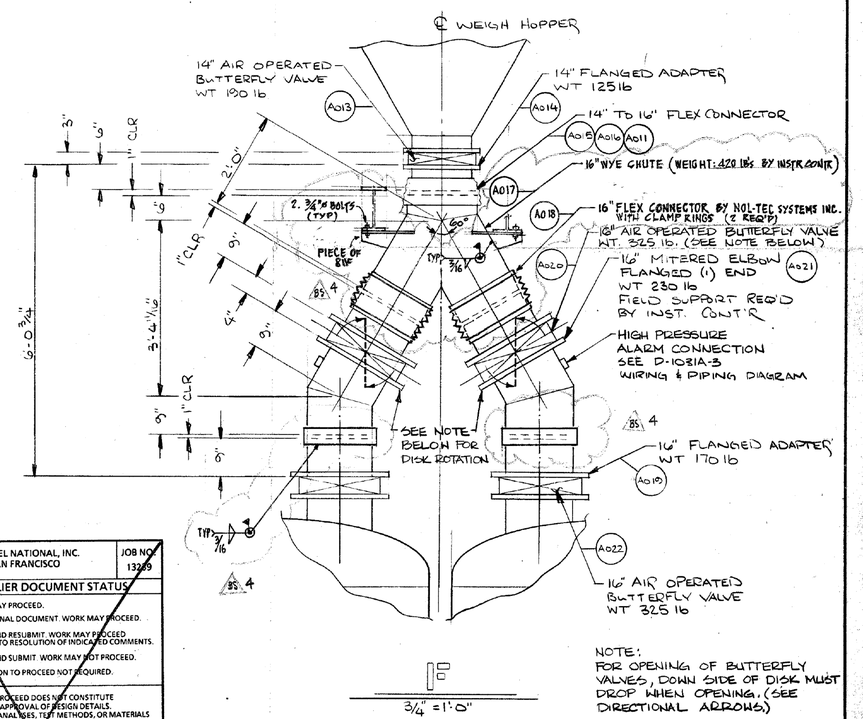

NOTE: FOR OPENING OF BUTTERFLY VALVES, DOWN SIDE OF DISK MUST DROP WHEN OPENING. (SEE DIRECTIONAL ARROWS)

BECHTEL NATIONAL, INC. SAN FRANCISCO — JOB NO. 13239

SUPPLIER DOCUMENT STATUS

1. ☒ WORK MAY PROCEED.
2. ☐ SUBMIT FINAL DOCUMENT. WORK MAY PROCEED.
3. ☐ REVISE AND RESUBMIT. WORK MAY PROCEED SUBJECT TO RESOLUTION OF INDICATED COMMENTS.
4. ☐ REVISE AND SUBMIT. WORK MAY NOT PROCEED.
5. ☐ PERMISSION TO PROCEED NOT REQUIRED.

PERMISSION TO PROCEED DOES NOT CONSTITUTE ACCEPTANCE OR APPROVAL OF DESIGN DETAILS, CALCULATIONS, ANALYSES, TEST METHODS, OR MATERIALS DEVELOPED OR SELECTED BY THE SUPPLIER, AND DOES NOT RELIEVE SUPPLIER FROM FULL COMPLIANCE WITH CONTRACTUAL OBLIGATIONS OR RELEASE ANY "HOLDS" PLACED ON THE CONTRACT.

ROUTE FOR	CS/A	E	J	K	M	N	P
REVIEW BY							
DATE							

G-321-E DOC. CATEGORY 1.1, 1.2
RESPONSIBLE ENGINEER T. VASILIW DATE 6-26-86

DISTRIBUTE FOR INFORMATION	CS/A	E	J	K	M	N	P
	1				1		1

AT-MJP-0011-00

SC #122

JUL 10 1990

BSRI

Bechtel [redacted] Job No. [redacted]
Bechtel Design Change/Revision BSR Date 7-10-90
Responsible Engineer H. KEISER
Checker H.P.

Coordinating Discipline	CS/A	PD	ELEC	MECH	CS
	BSR	N/A	N/A	WK	N/A

Group Supervisor SKSLade

CHANGE NOTES
(X) (Note – 1) DUP. TAGS
(Y) (Note – 2)

Supplier Documentation Status 1

REV	DATE	REVISION NOTE	BY
A			
A			
A			
B	6-6-86	ADDED A-A DETAIL	WAT
A	5-5-86	REVISED PER BECHTEL COMMENTS	WAT

TITLE: SYSTEM INSTALLATION DETAILS
E. I. DUPONT SAVANNAH RIVER
DRAWN BY A.H. DATE 3-21-86
APP'D BY W.A.T. SCALE NOTED
DESIGNED BY

NOL-TEC SYSTEMS, INC.
MATERIAL CONVEYING AND CONTROL SPECIALISTS
FOREST LAKE, MINNESOTA

SHEET OF — DRAWING NO. D1031A-2-3 — REV B

~~13239-MH-21142-41(1)-BSR4~~

DEFENSE WASTE PROCESSING FACILITY
SALTSTONE
DuPONT PROJECT S-1780
P/O NO. AXC-21142
ITEM NO.
TAG NO.

ENGINEERING DOC. CONTROL-SRS 00572088

ORIGINAL

T.KELL 07/18/12

41(1)BSR4

BEFORE

Design Change Notice (DCN) Continuation Page

DCP No.	Revision	Document No.	Revision	Page
M-DCP-Z-11003	1	MH-21142-1-41	B4	3 of 4
DCN No. M-DCP-Z-11003-P-00001	1	Project/Task No. N/A		

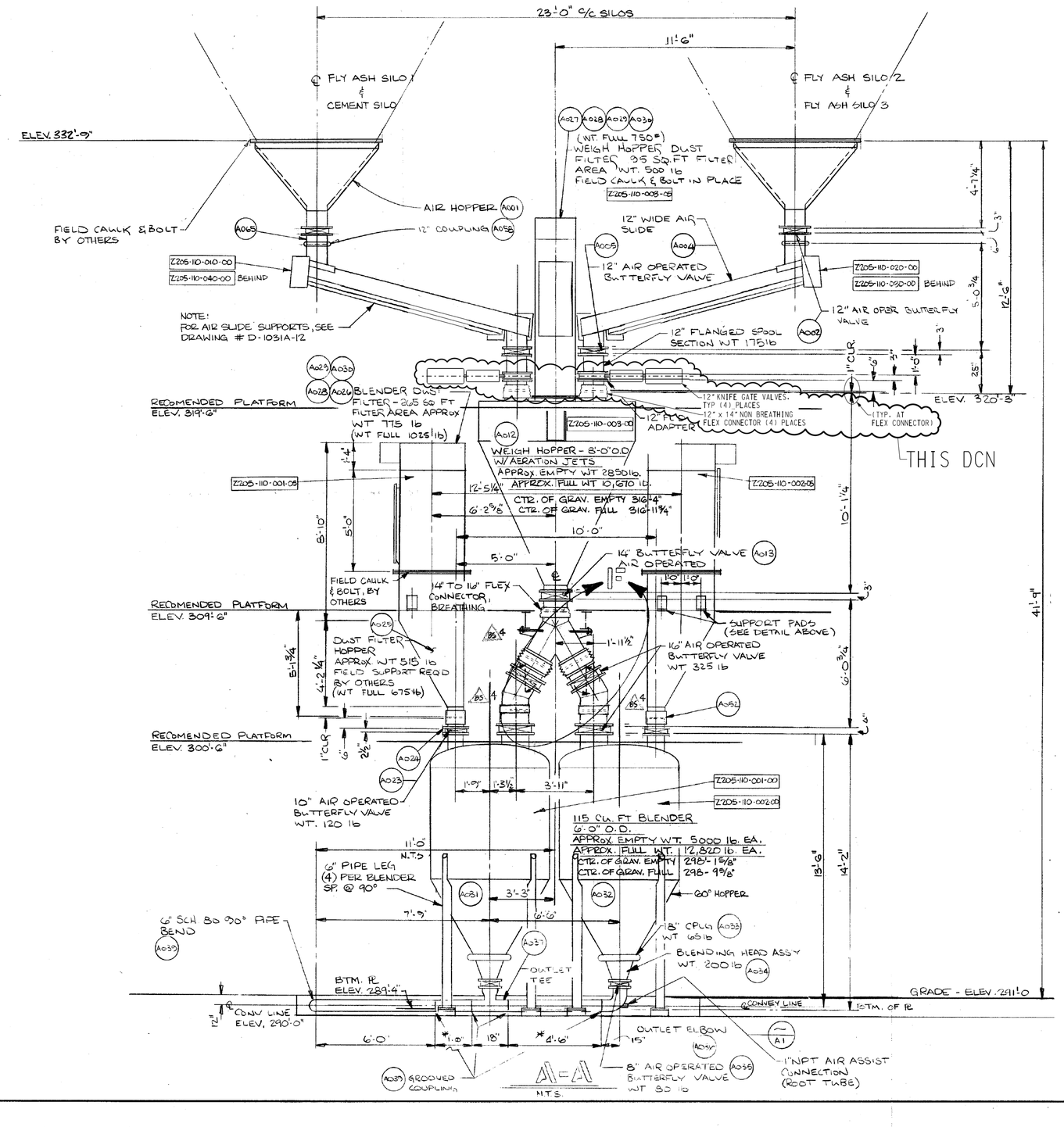

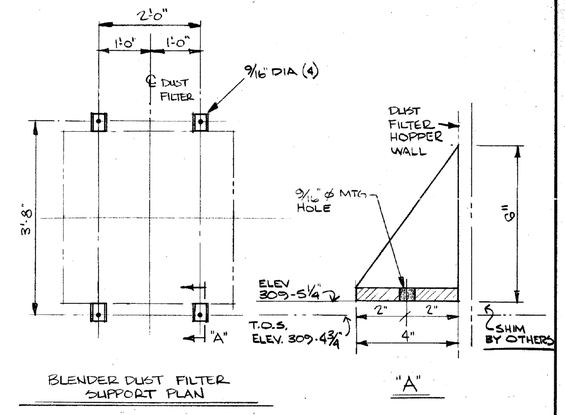

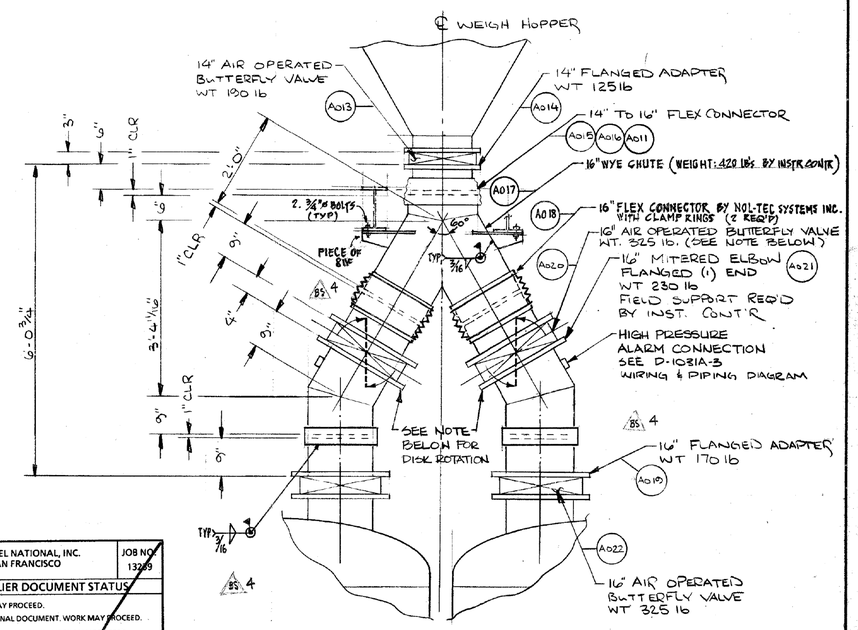

NOTE:
FOR OPENING OF BUTTERFLY VALVES, DOWN SIDE OF DISK MUST DROP WHEN OPENING. (SEE DIRECTIONAL ARROWS)

BECHTEL NATIONAL, INC. SAN FRANCISCO	JOB NO. 13239

SUPPLIER DOCUMENT STATUS

1. ☒ WORK MAY PROCEED.
2. ☐ SUBMIT FINAL DOCUMENT. WORK MAY PROCEED.
3. ☐ REVISE AND RESUBMIT. WORK MAY PROCEED SUBJECT TO RESOLUTION OF INDICATED COMMENTS.
4. ☐ REVISE AND SUBMIT. WORK MAY NOT PROCEED.
5. ☐ PERMISSION TO PROCEED NOT REQUIRED.

PERMISSION TO PROCEED DOES NOT CONSTITUTE ACCEPTANCE OR APPROVAL OF DESIGN DETAILS, CALCULATIONS, ANALYSES, TEST METHODS, OR MATERIALS DEVELOPED OR SELECTED BY THE SUPPLIER, AND DOES NOT RELIEVE SUPPLIER FROM FULL COMPLIANCE WITH CONTRACTUAL OBLIGATIONS OR RELEASE ANY "HOLDS" PLACED ON THE CONTRACT.

ROUTE FOR REVIEW BY DATE	CS/A	E	J	K	M	N	P

G-321-E
DOC. CATEGORY 1.1, 1.2
RESPONSIBLE ENGINEER T. VASILIW DATE 6-26-86

DISTRIBUTE FOR INFORMATION	CS/A	E	J	K	M	N	P
	1				1		1

AT MIP-0011-00

SC #122

JUL 10 1990

BSRI

Bechtel [redacted] Job No. [redacted]
Bechtel Design Change/Revision BS 4 Date 3-21-90
Responsible Engineer H. KEISER
Checker HLP
Coordinating Discipline CS/A PD ELEC MECH CS
BSRI N/A N/A HK N/A
Group Supervisor SHESSLER
CHANGE NOTES
(X) (Note – 1) DCF #146
(Y) (Note – 2)
Supplier Documentation Status 1

13239-MH-21142-41(1)-BSR4

DEFENSE WASTE PROCESSING FACILITY
SALTSTONE
DuPONT PROJECT S-1780
P/O NO. AXC 81142
ITEM NO.
TAG NO.

ENGINEERING DOC-CONTROL-SRS
00572088

ORIGINAL

REV	DATE	REVISION NOTE	BY
E			
D			
C			
B	6-6-86	ADDED A.C. HOSE	DCS
A	5-5-86	REVISED PER BECHTEL COMMENTS	WAT

TITLE: SYSTEM INSTALLATION DETAILS
E. I. DuPONT
SAVANNAH RIVER
DRAWN BY A.H. DATE 3-21-86
APP'D BY G.A.T. SCALE NOTED
DESIGNED BY

NOL-TEC SYSTEMS, INC.
MATERIAL CONVEYING AND CONTROL SPECIALISTS
FOREST LAKE, MINNESOTA

SHEET OF DRAWING NO. D1031A-2-3 REV B

41(1) BSR

T.KELL 07/18/12

AFTER

Design Change Notice (DCN) Continuation Page

DCP No.	M-DCP-Z-11003	Revision	1	Document No.	MH-21142-1-41	Revision	B4
DCN No.	M-DCP-Z-11003-P-00001	Revision	1	Project/Task No.	N/A	Page	4 of 4

BEST AVAILABLE COPY FOR ENTIRE DOCUMENT

Design Change Notice (DCN)

DCP Number	Revision	
M-DCP-Z-11003	1	
DCN No. M-DCP-Z-11003-P-00002	**Revision** 1	**Project/Task No** N/A

Design Change Notice (DCN)

Classification Reviewer: N/A

Date: 05/15/2019

Design Change Notice (DCN)

DCP Number	Revision	
M-DCP-Z-11003	1	
DCN No.	**Revision**	**Project/Task No**
M-DCP-Z-11003-P-00002	1	N/A

Document No. (Doc Rev)
MH21142-1-46;DE2

Reason for Change (Be specific)
TO PROVIDE A PRECISE MEANS TO METER THE SILOS DISCHARGE INTO THE BATCH WEIGH HOPPER Z-205000-BMH-HPR-0001.

Description of Change
D&R THE SECOND 12" BUTTERFLY VALVE DOWNSTREAM OF THE AIR SLIDES. ADD NEW 12" KNIFE GATE VALVE AT THIS LOCATION. TYPICAL FOR SILOS #1, 2, 3 AND SPARE SILO #4.

Engineering Approvals

Originator	Date	Responsible Engineer Manager	Date
SIMS, BASIL H.	05/15/2019	CLARK, STEPHEN H.	05/15/2019

Verifier/Checker	Date	Discipline
MELVIN, STEVEN M.	05/15/2019	P-PLANT DESIGN

Verification Method(s)
Design Check (GS/PS only)

BILL OF MATERIAL (CONTINUATION)							
	ITEM	QUAN.	DESCRIPTION		ITEM	QUAN.	DESCRIPTION
	23	1	V-0101 3" 150# LUG TYPE BUTTERFLY VALVE, P-004		36	1	V-0104 ½" 150# THD GATE VALVE, P-004
	24	1 FT.	3" SCHED. 40 PIPE, P-004		37	1	½" THD CAP, P-004
	25	3	3" SLIP ON FLANGE 150#, P-004		38	1 FT.	½" SCHED. 80 PIPE, P-004
*	26	4	3" REINFORCED TEFLON GASKETS ⅛" THK.				
*	27	8	⅝"x 5¾" BOLTS, A193 B7-HH				
*	28	8	⅝" HEAVY HEX NUTS, A194 2H-HH				
	29	1	3"X 2" REDUCING TEE, P-004				
	30	1	V-0102 3" 150# LUG TYPE BUTTERFLY VALVE, PER DWPF-P-004				
	31	3 FT.	2" SCHED. 40 PIPE, P-004				
	32	1	CV-0038 2" 2000# THD CHECK VALVE, PER DWPF-P004 VC13A.				
	33	1	V-0103 2" 150# THD GATE VALVE, P-004				
	34	1	2" THD CAP, P-004				
	35	1	½" THREAD-O-LET, P-004				

* NOT SHOWN ON DRAWING

NOTES:

1. FIELD TO VERIFY PRIOR TO INSTALLATION.
2. SEE DWG. MH-21142-46 (1) 3 FOR BILL OF MATERIAL CALLOUTS.
3. CHECK VALVE MEETING DWPF-P004 VC13A SPECIFICATION FOR VALVES SHALL BE USED FOR CV-0038.
4. PIPE WELDING TO BE PER ENG. STD. 05057, Y-16-2, PROCEDURE 108, AND Y-16-3, PROCEDURE 108-6.
5. USE TEFLON TAPE ON ALL THREADED CONNECTIONS.

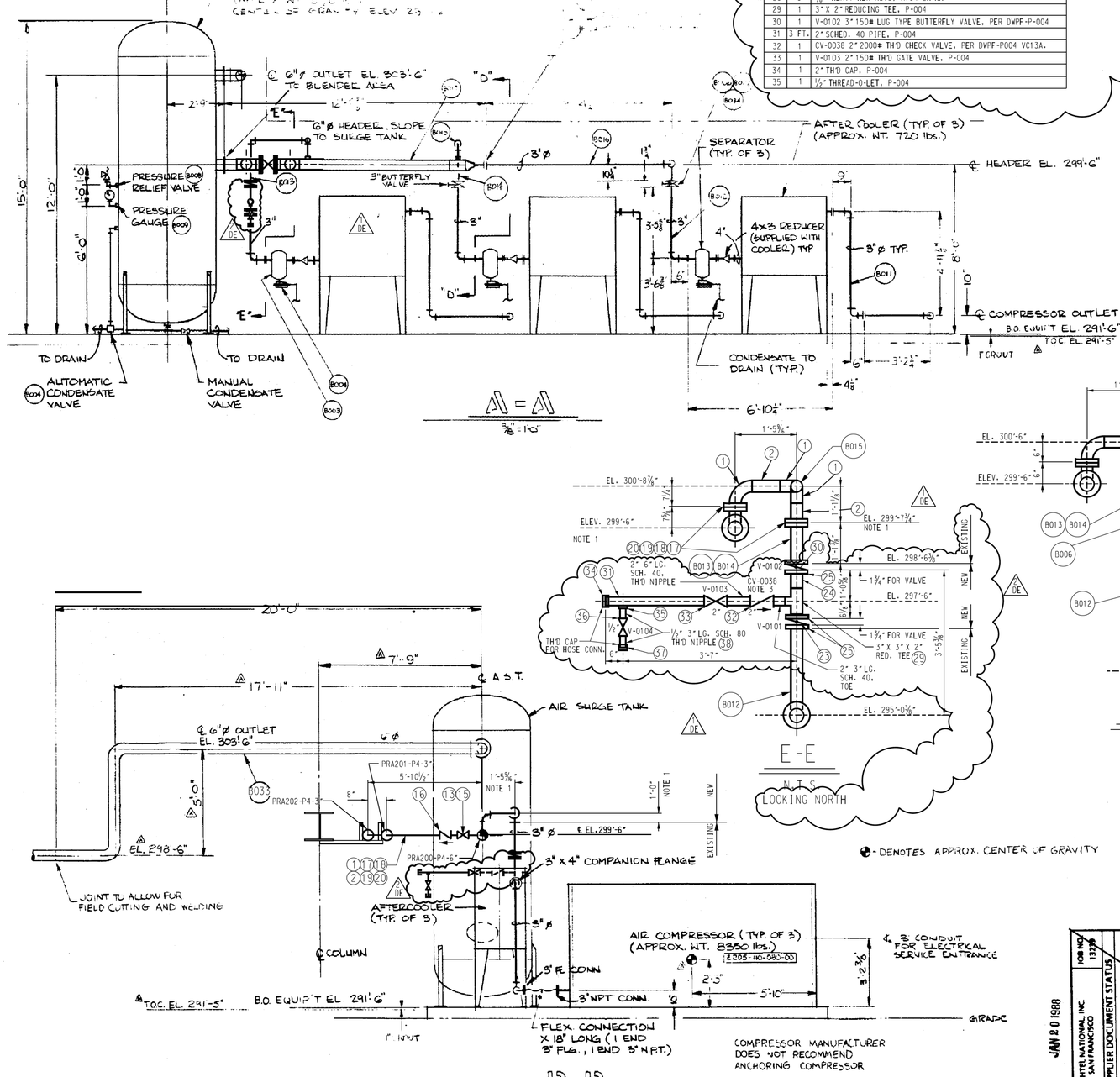

E-E

N.T.S.

LOOKING NORTH

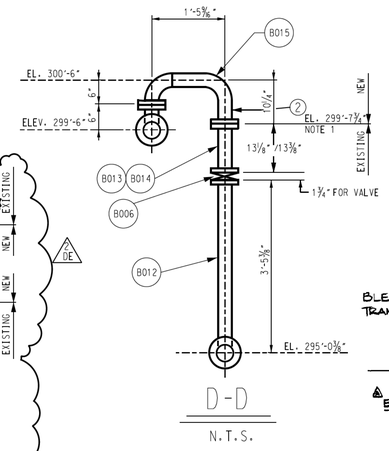

D-D

N.T.S.

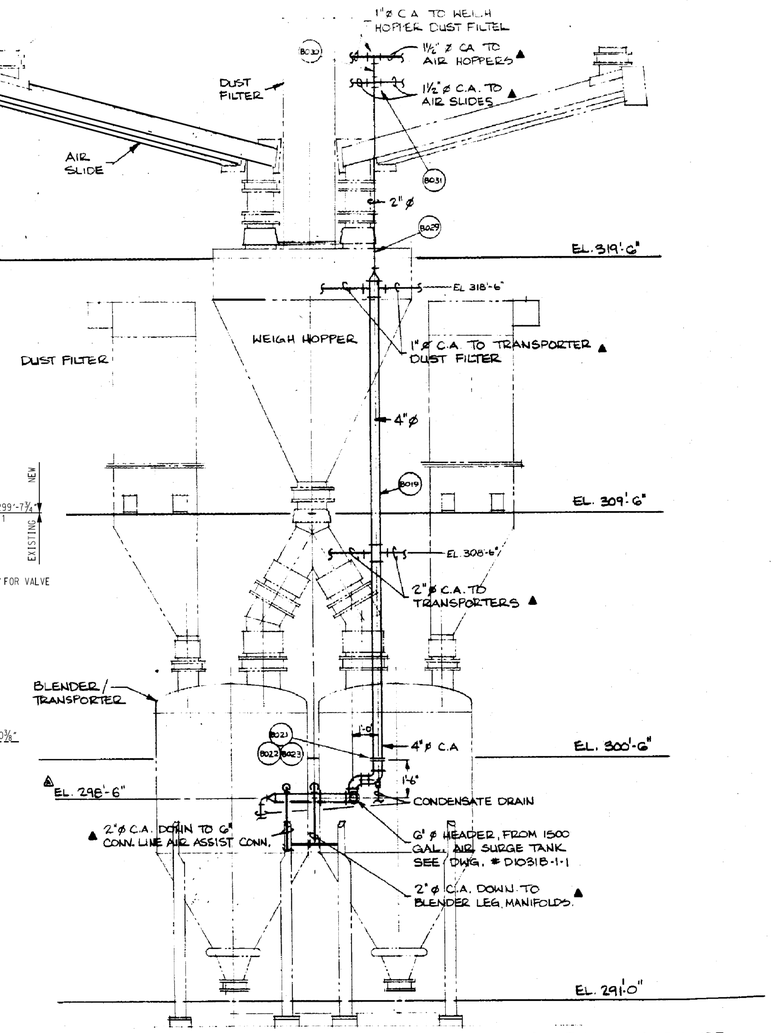

C-C

3/8" = 1'-0"

▲ FOR CONTINUATION OF PIPING SEE WIRING AND PIPING DRAWING D-1031A-3 3 SHEETS

B-B

3/8" = 1'-0"

● - DENOTES APPROX. CENTER OF GRAVITY

JAN 20 1988

BECHTEL NATIONAL, INC. SAN FRANCISCO — JOB NO. 13239

SUPPLIER DOCUMENT STATUS

1. ☐ CLEARED; MAY PROCEED.
2. ☐ SUBMIT FINAL DOCUMENT; WORK MAY PROCEED.
3. ☐ REVISE AND RESUBMIT; WORK MAY PROCEED SUBJECT TO RESOLUTION OF INDICATED COMMENTS.
4. ☐ REVISE AND SUBMIT; WORK MAY NOT PROCEED.
5. ☐ PERMISSION TO PROCEED NOT REQUIRED.

PERMISSION TO PROCEED DOES NOT CONSTITUTE ACCEPTANCE OF DESIGN, DATA, MATERIALS, METHODS OR CALCULATIONS; ANALYSES, TEST METHODS OR MATERIALS DEVELOPED OR SELECTED BY YOU MAY NOT BE BASED ON RELIABLE EARTHQUAKE DATA; NOR DOES IT RELIEVE US OF OUR CONTRACTUAL OBLIGATIONS OR RELEASE ANY "HOLD" PLACED ON THE CONTRACT.

ROUTE FOR REVIEW BY	CGA	E	I	N	*
DATE					
ENGINEER	CGA	E	I	N	*
DISPOSITION FOR INFORMATION					

G.S.11 E. DOC. CONTROL — J. J. L. J.
RESPONSIBLE ENGINEER — F. L. SHEPHERD — DATE 1-19-88

~~13239-MH-21142-46 (1) DE2~~

DEFENSE WASTE PROCESSING FACILITY
SALTSTONE
DUPONT PROJECT NO S-1783
P/O NO AX 21142
ITEM NO.
TAG NO.
S/C 122

REV	DATE	REVISION NOTE	BY
10-22-87		ADDED VIEW D-D, ITEM # B014	W.A.T.
5-5-86		AS PER BECHTEL SPECS	M.M.

TITLE: GENERAL ARRANGEMENT COMPRESSED AIR EQUIPMENT E.I. DUPONT SAVANNAH RIVER

NOEL TEC SYSTEMS, INC. — MATERIAL CONVEYING AND CONTROL SPECIALISTS — FOREST LAKE, MINNESOTA

DRAWN BY: A. H. — DATE: 2-10-86
APP'D BY: W.A.T. — SCALE: NOTED
DESIGNED BY:
SHEET OF — DRAWING NO. D1031B-1-3 — REV B

LAST CADD REV. BY : R.A. KING DATE: 09/13/18

~~MH21142 1-46-DE2~~

SRS Rev No.	Proj. No.	Changes / Comments	Originator / DATE	Checker / DATE	Approver / DATE	SRS
DE1	N/A	INCORPORATED M-DCP-Z-05006 (REF DCN P004).	APPROVALS MAINTAINED IN DCR/EDWS		03/15/10	Revisions to Supplier Document
DE2	N/A	INCORPORATED M-DCF-Z-00307.	APPROVALS MAINTAINED IN DCR/EDWS			

THIS IS A HYBRID CADD PLOT

REVISION REQUIRES PROPER RASTER/VECTOR (I/RAS) SOFTWARE.
CONTACT PD&CS ENGINEERING AUTOMATION GROUP FOR FURTHER INFORMATION.
DO NOT REVISE RASTER OR VECTOR FILES SEPARATELY.

BEFORE

Design Change Notice (DCN) Continuation Page

DCP No.	M-DCP-Z-11003	Revision	1	Document No.	M-21142-1-46	Revision	DE2
DCN No.	M-DCP-Z-11003-P-00002	Revision	1	Project/Task No.	N/A	Page	3 of 4

BILL OF MATERIAL (CONTINUATION)							
ITEM	QUAN.	DESCRIPTION		ITEM	QUAN.	DESCRIPTION	
23	1	V-0101 3"150# LUG TYPE BUTTERFLY VALVE.P-004		36	1	V-0104 ½"150# TH'D GATE VALVE. P-004	
24	1 FT.	3"SCHED. 40 PIPE. P-004		37	1	½" TH'D CAP. P-004	
25	3	3" SLIP ON FLANGE 150#. P-004		38	1 FT.	½" SCHED. 80 PIPE. P-004	
* 26	4	3"REINFORCED TEFLON GASKETS ⅛" THK.					
* 27	8	⅝"x 5¾" BOLTS. A193 B7-HH					
* 28	8	⅝" HEAVY HEX NUTS. A194 2H-HH					
29	1	3"X 2" REDUCING TEE. P-004					
30	1	V-0102 3"150# LUG TYPE BUTTERFLY VALVE. PER DWPF-P-004					
31	3 FT.	2" SCHED. 40 PIPE. P-004					
32	1	CV-0038 2"2000# TH'D CHECK VALVE. PER DWPF-P004 VC13A.					
33	1	V-0103 2"150# TH'D GATE VALVE. P-004					
34	1	2" TH'D CAP. P-004					
35	1	½" THREAD-O-LET. P-004					

* NOT SHOWN ON DRAWING

NOTES:

1. FIELD TO VERIFY PRIOR TO INSTALLATION.
2. SEE DWG. MH-21142-46 (1) 3 FOR BILL OF MATERIAL CALLOUTS.
3. CHECK VALVE MEETING DWPF-P004 VC13A SPECIFICATION FOR VALVES SHALL BE USED FOR CV-0038.
4. PIPE WELDING TO BE PER ENG. STD. 05057, Y-16-2, PROCEDURE 108, AND Y-16-3, PROCEDURE 108-6.
5. USE TEFLON TAPE ON ALL THREADED CONNECTIONS.

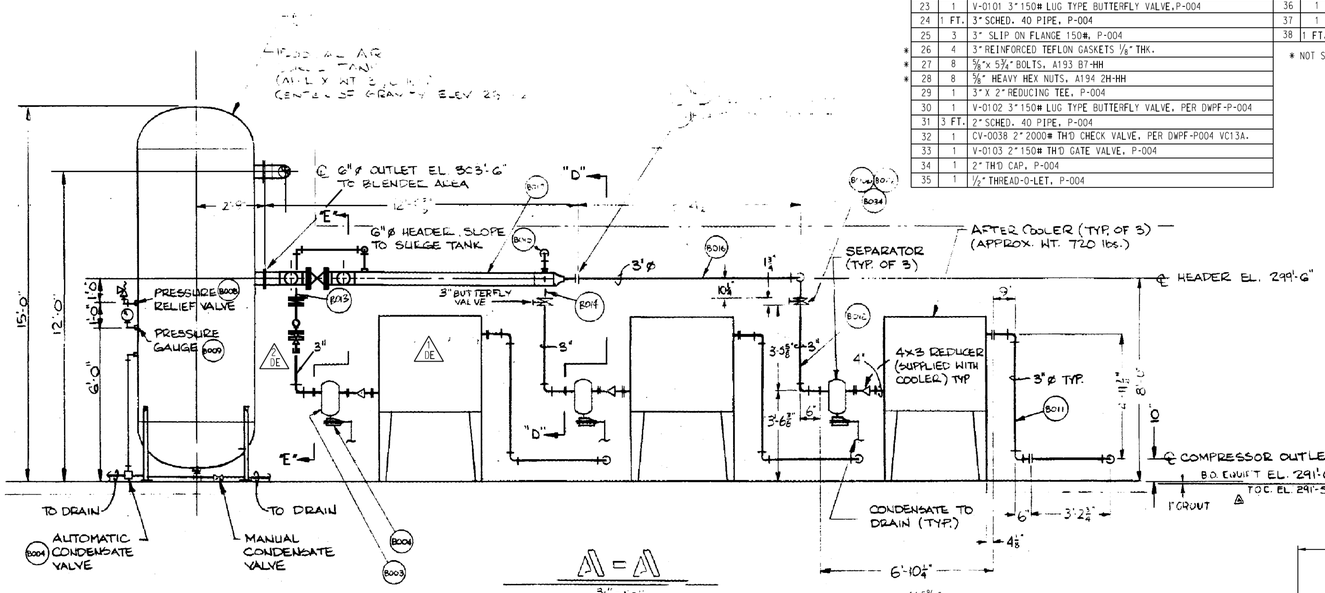

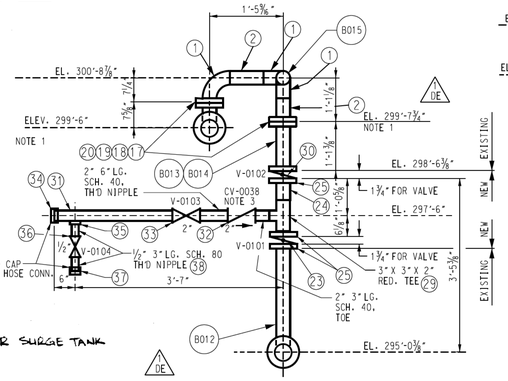

E-E

N.T.S.
LOOKING NORTH

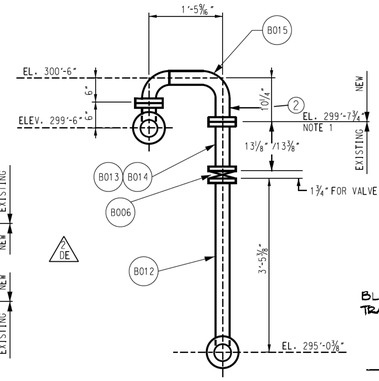

D-D

N.T.S.

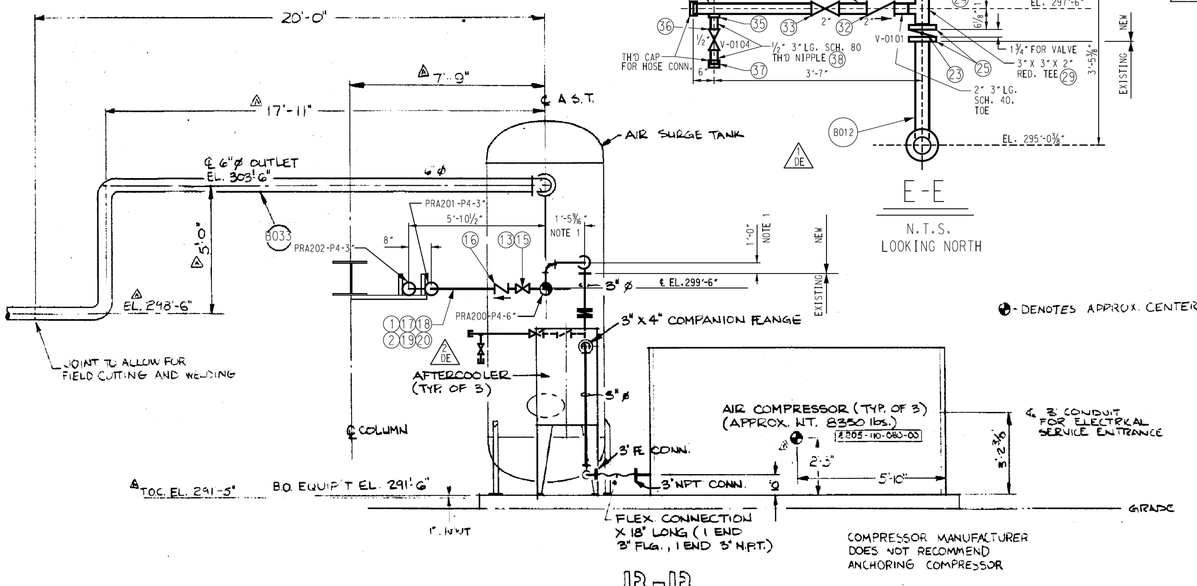

13-13

3/8" = 1'-0"

● - DENOTES APPROX. CENTER OF GRAVITY

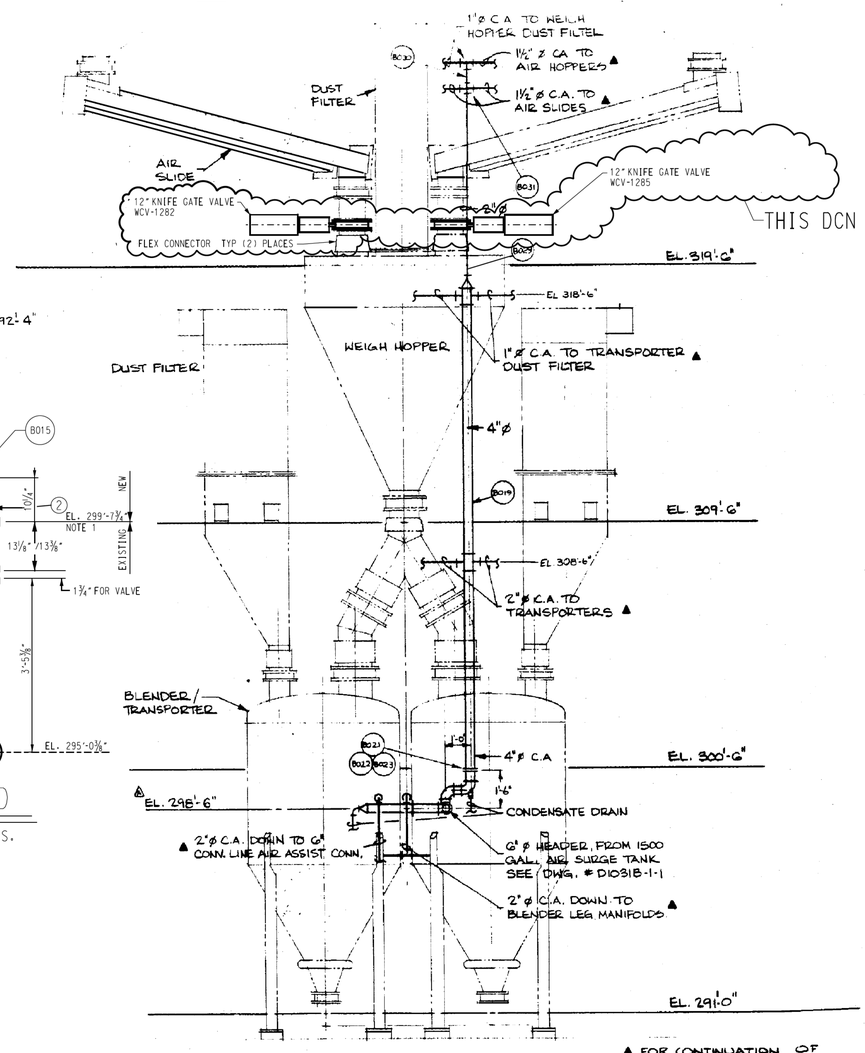

▲ FOR CONTINUATION OF PIPING SEE WIRING AND PIPING DRAWING D-1031A-3 3 SHEETS

3/8" = 1'-0"

JAN 20 1988

BECHTEL NATIONAL INC. SAN FRANCISCO

JOB NO. 13239

SUPPLIER DOCUMENT STATUS

1. ☐ WORK MAY PROCEED
2. ☐ SUBMIT FINAL DOCUMENT. WORK MAY PROCEED
3. ☐ REVISE AND RESUBMIT. WORK MAY PROCEED SUBJECT TO RESOLUTION OF INDICATED COMMENTS
4. ☐ REVISE AND SUBMIT. WORK MAY NOT PROCEED
5. ☐ PERMISSION TO PROCEED NOT REQUIRED.

PERMISSION TO PROCEED DOES NOT CONSTITUTE ACCEPTANCE OF THE DESIGN, DATA, MATERIALS, CALCULATIONS, ANALYSES, TEST METHODS OR MATERIALS DEVELOPED OR SELECTED BY THE SUPPLIER AND DOES NOT RELIEVE THE SUPPLIER OF COMPLIANCE WITH CONTRACTUAL OBLIGATIONS. FOR RELEASE ANY "HOLDS" PLACED ON THE COMPONENT.

ROUTE FOR REVIEW BY | DATE
CGM E | N
CGM E | N
CGM E | N

G231 E
DOC. CATEGORY E.H. SHERRY DATE 1-13-88
ENGINEER
DISTRIBUTE PER INFORMATION
1-GPD-0118

~~MH21142-1-46-DE2~~

SRS Rev No.	Proj. No.	Changes / Comments	Originator DATE	Checker DATE	Approver DATE	SRS
DE1	N/A	INCORPORATED M-DCP-Z-05006 (REF DCN P004).	APPROVALS	MAINTAINED IN DCR/EDMS	03/15/10	Revisions to Supplier Document
DE2	N/A	INCORPORATED M-DCF-Z-00307.	APPROVALS	MAINTAINED IN DCR/EDMS		

THIS IS A HYBRID CADD PLOT

REVISION REQUIRES PROPER RASTER/VECTOR (I/RAS) SOFTWARE.
CONTACT PD&CS ENGINEERING AUTOMATION GROUP FOR FURTHER INFORMATION.
DO NOT REVISE RASTER OR VECTOR FILES SEPARATELY.

REV	DATE	REVISION NOTE	BY
A			
A			
A			
A	10-22-87	ADDED VIEW D-D, ITEM #B014	W.A.T.
A	5-5-86	AS PER BECHTEL SPECS.	M.M.

LAST CADD REV. BY : R.A. KING DATE: 09/13/18

TITLE GENERAL ARRANGEMENT COMPRESSED AIR EQUIPMENT E.I. DuPONT SAVANNAH RIVER

DRAWN BY A.A. DATE 2-5-86
APP'D BY W.A.T. SCALE NOTED
DESIGNED BY

NOL-TEC SYSTEMS, INC.
MATERIAL CONVEYING AND CONTROL SPECIALISTS
FOREST LAKE, MINNESOTA

SHEET OF DRAWING NO. D1031B-1-2 REV B

~~MH21142-1-46-DE2~~

~~13239-MH-21142-46 (1) DE2~~

DEFENSE WASTE PROCESSING FACILITY
SALTSTONE
DUPONT PROJECT NO. 5-1780
P/O NO AXC 21142
ITEM NO.
TAG NO
S/C # 122

AFTER

Design Change Notice (DCN) Continuation Page

DCF No. M-DCP-Z-11003	Revision 1	Document No. MH21142-1-46	Revision DE2
DCN No. M-DCP-Z-11003-P-00002	Revision 1	Project/Task No. N/A	Page 4 of 4

Design Change Notice (DCN)

DCP Number	Revision	
M-DCP-Z-11003	1	
DCN No. M-DCP-Z-11003-P-00003	**Revision** 1	**Project/Task No** N/A

Design Change Notice (DCN)

Classification Reviewer: N/A

Date: 05/15/2019

Design Change Notice (DCN)

DCP Number	Revision	
M-DCP-Z-11003	1	
DCN No.	**Revision**	**Project/Task No**
M-DCP-Z-11003-P-00003	1	N/A

Document No. (Doc Rev)
W775922;5

Reason for Change (Be specific)
TO PROVIDE A PRECISE MEANS TO METER THE SILOS DISCHARGE INTO THE BATCH WEIGH HOPPER Z-205000-BMH-HPR-0001.

Description of Change
D&R THE SECOND 12" BUTTERFLY VALVE DOWNSTREAM OF THE AIR SLIDES. ADD NEW 12" KNIFE GATE VALVE AT THIS LOCATION. TYPICAL FOR SILOS #1, 2, 3 AND SPARE SILO #4.

Engineering Approvals

Originator	Date	Responsible Engineer Manager	Date
SIMS, BASIL H.	05/15/2019	CLARK, STEPHEN H.	05/15/2019

Verifier/Checker	Date	Discipline
MELVIN, STEVEN M.	05/15/2019	P-PLANT DESIGN

Verification Method(s)
Design Check (GS/PS only)

ANALYZE FOR SAFETY, ECOLOGY, AND MINIMUM ESSENTIAL DESIGN

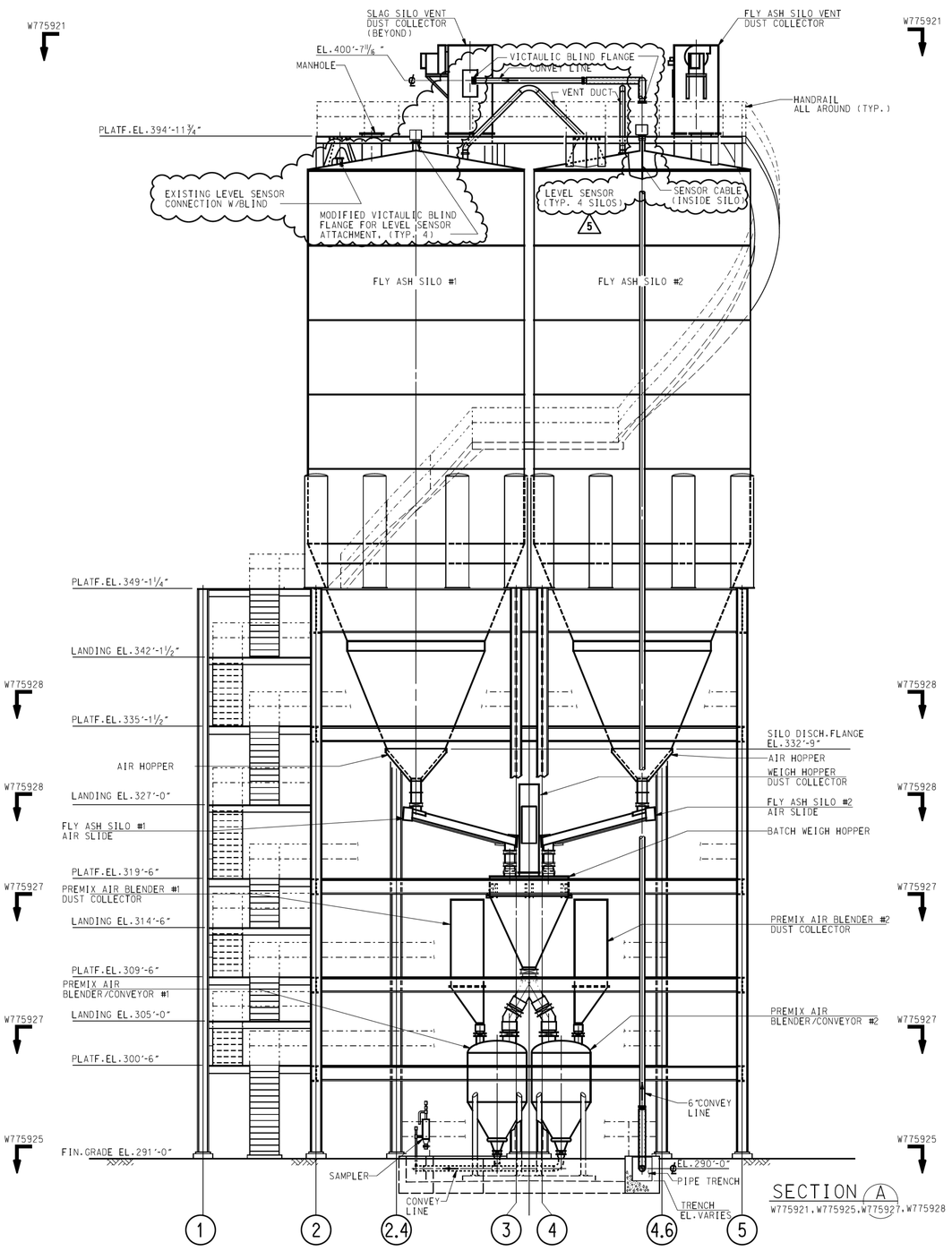

SECTION A
W775921, W775925, W775927, W775928

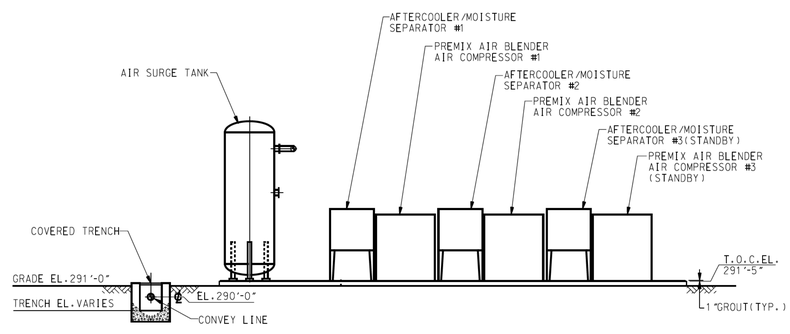

SECTION D
W775925

NOTES:

1. FOR GENERAL NOTES SEE DWG. W775920.

W775922 LAST 5 REV.

Bechtel is responsible for the original design contained on this drawing, however, changes incorporated on this drawing to reflect as-built conditions have not been verified by Bechtel National, Inc.

P PA Z 00041 LATEST 5 REVISION

NOTE:
THIS DRAWING IS TO BE USED ONLY FOR THE PURPOSE OF LOCATION AND INSTALLATION OF EQUIPMENT

BECHTEL NATIONAL INC. SAN FRANCISCO — JOB NO. 13239

THIS DOCUMENT CONTAINS INFORMATION RELATING TO ACTIVITIES OF THE U.S. DEPARTMENT OF ENERGY. NOT TO BE REPRODUCED OR RELEASED WITHOUT PRIOR APPROVAL.

M/F	BLDG.	PROJ.	DA	TYPE		LAST
	—	S1780	Z205	24	W775922	5 REV.

SAVANNAH RIVER PLANT-200S AREA
DEFENSE WASTE PROCESSING FACILITY-SLUDGE PLANT
CEMENT/FLY ASH SILOS-SECTIONS A & D
GENERAL ARRANGEMENT/EQUIPMENT LOCATION
PROCESS PLANT DESIGN

PROJ.	REV. NO.	REVISION
N/A	5	INCORPORATED M-DCP-Z-05006 (REF DCN P007)

APPROVALS MAINTAINED IN DCR / DWS / MICROFILM

PRP'D	LEAD ENG	CHK'D/VERIF'D	APRV'D	APRV'D	APRV'D
INITIAL AND DATE					

P-PA-Z-00041
E & PD DRAWING NO.

UNITED STATES DEPARTMENT OF ENERGY
SAVANNAH RIVER SITE

PROJ.	NO.	REVISION	DFT	ENG	CHK	SPV	PE	DLP	DATE
S1780	0	ISSUED FOR INIT CONST.RELEASE (ICR)	ORIGINAL SIGNED						01/07/86
S1780	1	ISSUED FOR DESIGN (IFD)	ORIGINAL SIGNED						04/11/86
S1780	2	ISSUED FOR IFD	ORIGINAL SIGNED						06/13/86
S1780	3	REVISED & REISSUED FOR IFD	ORIGINAL SIGNED						06/13/86
S1780	4	ISSUED ASBUILT (IAB)							

STANDARDS

REFERENCE DRAWINGS			
W754522	P&ID		
W754524	P&ID		
W754540	FLOW DIAG.		

THIS DRAWING HAS BEEN FURNISHED BY E.I.DU PONT DE NEMOURS & CO. THE INFORMATION AND KNOW-HOW THEREON MAY NOT BE USED NOR THE DRAWING REPRODUCED WITHOUT THE WRITTEN PERMISSION OF DU PONT. ALL REPRODUCTIONS IN WHOLE OR IN PART, INCLUDING VENDOR'S SHOP DRAWINGS, SHALL BEAR OR REFER TO THIS STAMP.

			DATE
PROJECT	S1780		
SCALE	1/4"=1'-0"		
DRAWN	R.TENORIO		12/21/84
CHECKED			
APPROVED - I.C.R.	GW OAKES		01/07/86
APPROVED FINAL	GW OAKES		04/11/86

DRC-1 DUPONT
E.I.DU PONT DE NEMOURS & CO., INC.
WILMINGTON, DELAWARE
ENGINEERING DEPARTMENT
W775922

LAST CADD. REV. BY T.KELL DATE: 07/18/12

NFO-10-13 (12/82)

3A

Design Change Notice (DCN) Continuation Page

BEFORE

DCP No.	Revision	Document No.	Revision	Page
M-DCP-Z-11003	1	W775922	5	3 of 4
DCN No. M-DCP-Z-11003-P-00003		Project/Task No.		

ANALYZE FOR SAFETY, ECOLOGY, AND MINIMUM ESSENTIAL DESIGN

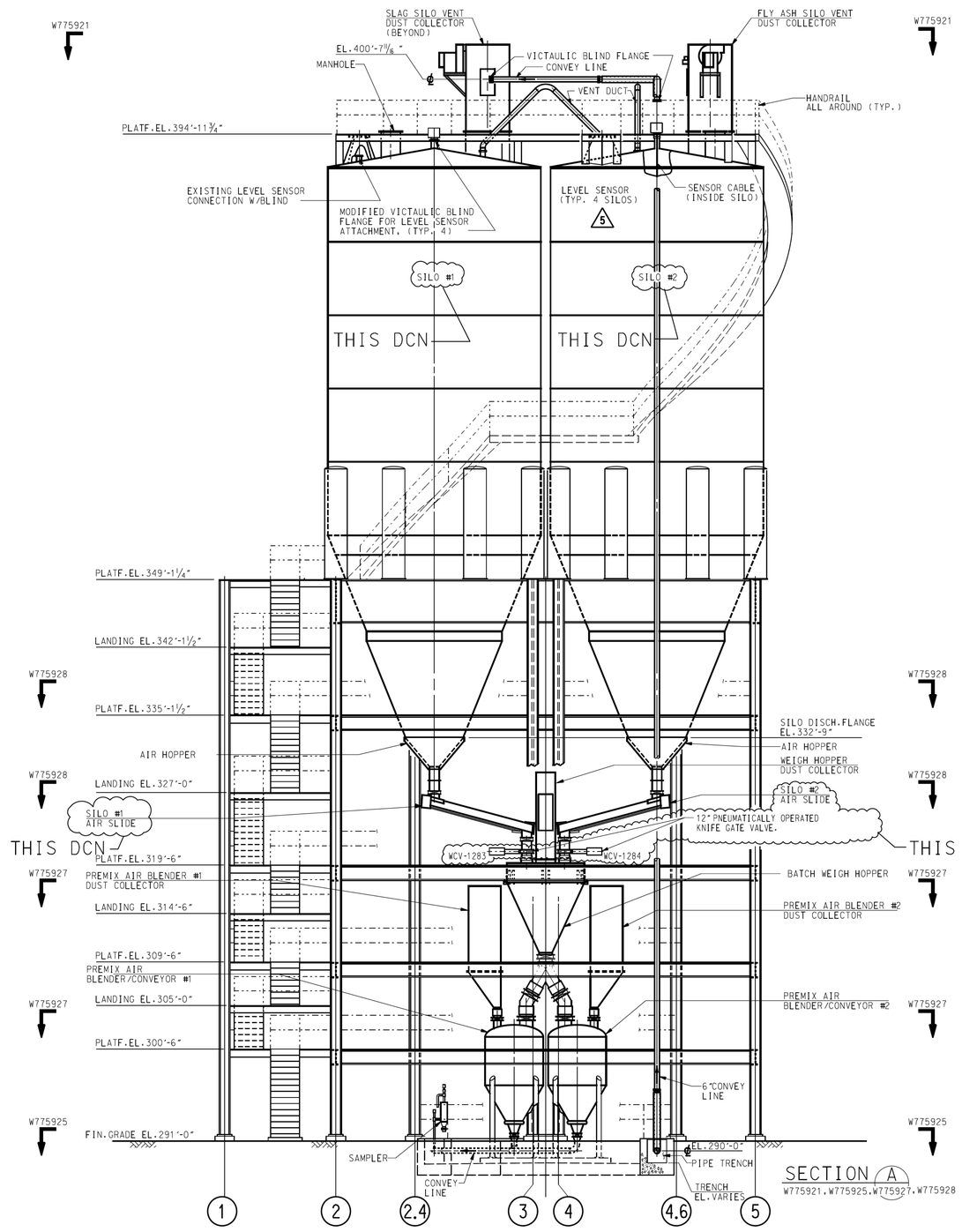

SECTION A
W775921, W775925, W775927, W775928

DESIGN COMPLETE WITH EXCEPTION OF DESIGN FROM PROCUREMENTS

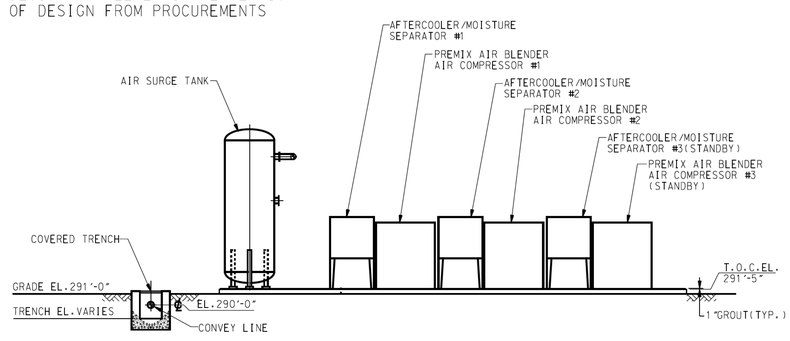

SECTION D
W775925

NOTES:

1. FOR GENERAL NOTES SEE DWG. W775920.

W775922 | LAST 5 REV.

Bechtel is responsible for the original design contained on this drawing, however, changes incorporated on this drawing to reflect as-built conditions have not been verified by Bechtel National, Inc.

P PA Z 00041 | LATEST 5 REVISION

NOTE:
THIS DRAWING IS TO BE USED ONLY FOR THE PURPOSE OF LOCATION AND INSTALLATION OF EQUIPMENT

BECHTEL	BECHTEL NATIONAL INC. SAN FRANCISCO	JOB NO. 13239

THIS DOCUMENT CONTAINS INFORMATION RELATING TO ACTIVITIES OF THE U.S. DEPARTMENT OF ENERGY. NOT TO BE REPRODUCED OR RELEASED WITHOUT PRIOR APPROVAL.

M/F	BLDG.	PROJ.	DA	TYPE		LAST
	—	S1780	Z205	24	W775922	5 REV.

SAVANNAH RIVER PLANT-200S AREA
DEFENSE WASTE PROCESSING FACILITY-SLUDGE PLANT
CEMENT/FLY ASH SILOS-SECTIONS A & D
GENERAL ARRANGEMENT/EQUIPMENT LOCATION
PROCESS PLANT DESIGN

PROJ.	REV. NO.	REVISION
N/A	5	INCORPORATED M-DCP-Z-05006 (REF DCN P007)

APPROVALS MAINTAINED IN DCR / DWS / MICROFILM

PRP'D	LEAD ENG	CHK'D/VERIF'D	APRV'D	APRV'D	APRV'D
INITIAL AND DATE					

P-PA-Z-00041
E & PD DRAWING NO.

UNITED STATES DEPARTMENT OF ENERGY
SAVANNAH RIVER SITE

PROJ.	NO.	REVISION	DFT	ENG	CHK	SPV	PE	DLP	DATE
S1780	0	ISSUED FOR INIT CONST.RELEASE (ICR)	ORIGINAL SIGNED						01/07/86
S1780	1	ISSUED FOR DESIGN (IFD)	ORIGINAL SIGNED						04/11/86
S1780	2	ISSUED FOR IFD	ORIGINAL SIGNED						06/13/86
S1780	3	REVISED & REISSUED FOR IFD	ORIGINAL SIGNED						06/13/86
S1780	4	ISSUED ASBUILT (IAB)							

STANDARDS

REFERENCE DRAWINGS			
W754522	P&ID		
W754524	P&ID		
W754540	FLOW DIAG.		

THIS DRAWING HAS BEEN FURNISHED BY E.I.DU PONT DE NEMOURS & CO. THE INFORMATION AND KNOW-HOW THEREON MAY NOT BE USED NOR THE DRAWING REPRODUCED WITHOUT THE WRITTEN PERMISSION OF DU PONT. ALL REPRODUCTIONS IN WHOLE OR IN PART, INCLUDING VENDOR'S SHOP DRAWINGS, SHALL BEAR OR REFER TO THIS STAMP.

PROJECT	S1780		
SCALE	1/4"=1'-0"		DATE
DRAWN	R.TENORIO		12/21/84
CHECKED			
APPROVED - I.C.R.	GW OAKES		01/07/86
APPROVED FINAL	GW OAKES		04/11/86

DRC-1 DUPONT
E.I.DU PONT DE NEMOURS & CO., INC.
WILMINGTON, DELAWARE
ENGINEERING DEPARTMENT
W775922

LAST CADD. REV. BY T.KELL DATE: 09/15/10

NFO-10-13 (12/82)

Design Change Notice (DCN) Continuation Page

AFTER

DCP No.	Revision	Document No.	Revision	Project/Task No.	Revision	Page
M-DCP-Z-11003		W775922			5	4 of 4

DCN No. M-DCP-Z-11003-P-00003

Design Change Notice (DCN)

DCP Number	Revision	
M-DCP-Z-11003	1	
DCN No. M-DCP-Z-11003-P-00004	**Revision** 1	**Project/Task No** N/A

Design Change Notice (DCN)

Classification Reviewer: N/A

Date: 05/15/2019

Design Change Notice (DCN)

DCP Number	Revision	
M-DCP-Z-11003	1	
DCN No.	**Revision**	**Project/Task No**
M-DCP-Z-11003-P-00004	1	N/A

Document No. (Doc Rev)
W775926;5

Reason for Change (Be specific)
TO PROVIDE A PRECISE MEANS TO METER THE SILOS DISCHARGE INTO THE BATCH WEIGH HOPPER Z-205000-BMH-HPR-0001.

Description of Change
D&R THE SECOND 12" BUTTERFLY VALVE DOWNSTREAM OF THE AIR SLIDES. ADD NEW 12" KNIFE GATE VALVE AT THIS LOCATION. TYPICAL FOR SILOS #1, 2, 3 AND SPARE SILO #4.

Engineering Approvals

Originator	Date	Responsible Engineer Manager	Date
SIMS, BASIL H.	05/15/2019	CLARK, STEPHEN H.	05/15/2019

Verifier/Checker	Date	Discipline
MELVIN, STEVEN M.	05/15/2019	P-PLANT DESIGN

Verification Method(s)
Design Check (GS/PS only)

ANALYZE FOR SAFETY, ECOLOGY, AND MINIMUM ESSENTIAL DESIGN

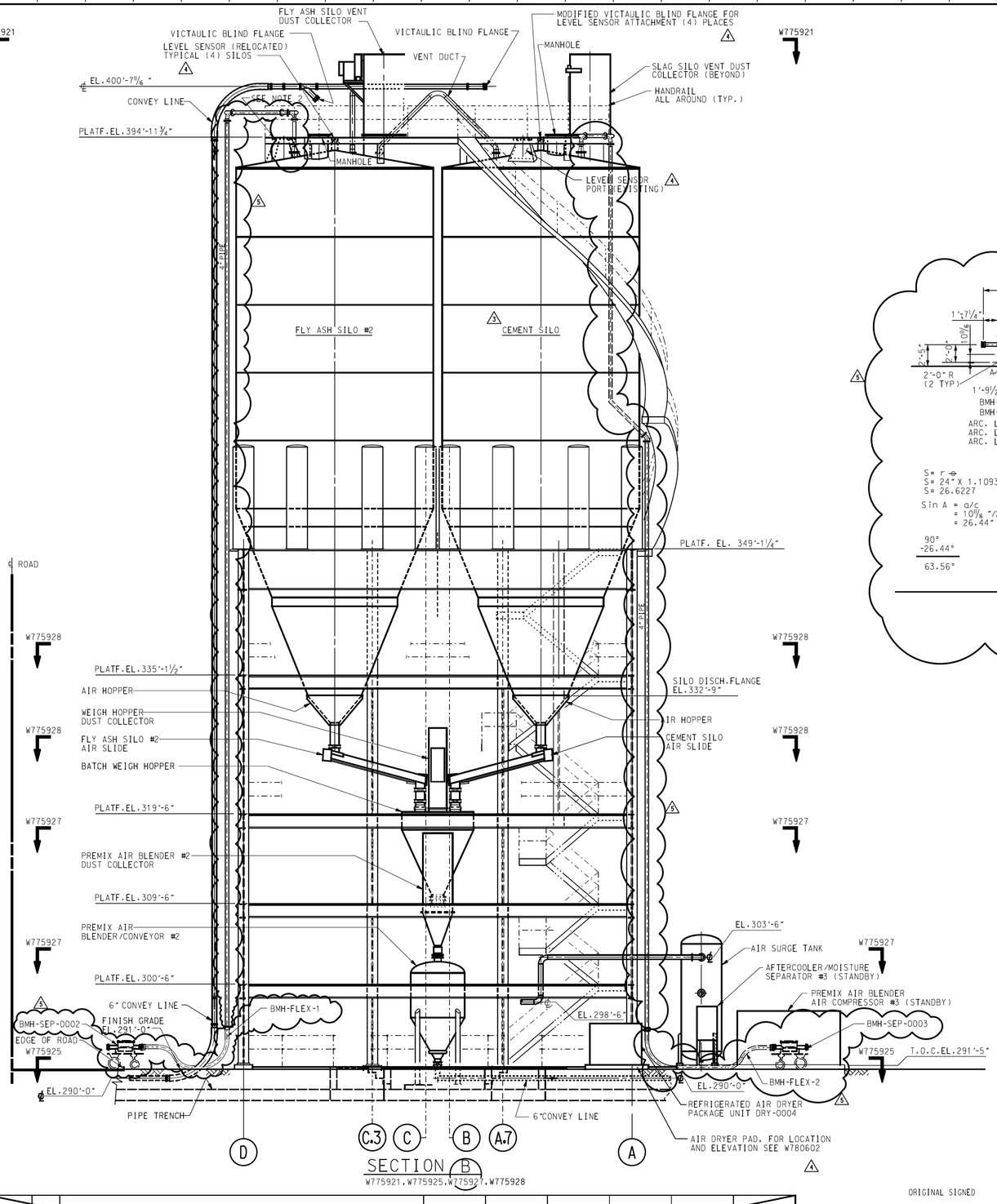

SECTION B

W775921, W775925, W775927, W775928

NOTES:

1. FOR GENERAL NOTES SEE DWG. W775920
2. THE EXISTING LEVEL SENSOR INSTRUMENT INSIDE THE LEVEL SENSOR PORT ON EACH SILO SHALL BE REMOVED. THE REMAINING FLANGED OPENING SHALL BE COVERED W/ A CORRESPONDING 150# BLIND FLANGE OR A MATCHING 1/4" THK. C.S. PLATE W/ A 1/8" THK. NEOPRENE GASKET. C.S. PLATE MATERIAL TO BE A-36, GALVANIZED OR PAINT IN ACCORDANCE WITH SRS ENGINEERING GUIDE: 09900-G.

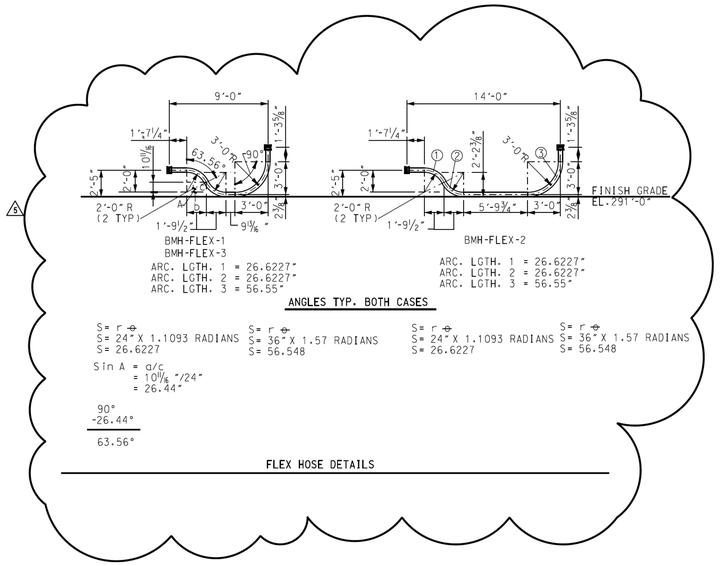

ANGLES TYP. BOTH CASES

S= r θ
S= 24" X 1.1093 RADIANS
S= 26.6227

S= r θ
S= 36" X 1.57 RADIANS
S= 56.548

S= r θ
S= 24" X 1.1093 RADIANS
S= 26.6227

S= r θ
S= 36" X 1.57 RADIANS
S= 56.548

Sin A = a/c
= 10 11/16"/24"
= 26.44°

90°
-26.44°
63.56°

FLEX HOSE DETAILS

W775926 LAST 5 REV.

P PA Z 00042 LAST 5 REVISION

NOTE:

THIS DRAWING IS TO BE USED FOR THE PURPOSE OF LOCATION AND INSTALLATION OF EQUIPMENT.

BECHTEL NATIONAL INC.
SAN FRANCISCO
JOB NO. 13239

THIS DOCUMENT CONTAINS INFORMATION RELATING TO ACTIVITIES OF THE U.S. DEPARTMENT OF ENERGY. NOT TO BE REPRODUCED OR RELEASED WITHOUT PRIOR APPROVAL.

M/F	BLDG.	PROJ.	DA	TYPE		LAST
	—	S1780	Z205	24	W775926	5 REV.

SAVANNAH RIVER PLANT-200S AREA
DEFENSE WASTE PROCESSING FACILITY-SLUDGE PLANT
CEMENT/FLY ASH SILOS-SECTION B
GENERAL ARRANGEMENT/EQUIPMENT LOCATION
PROCESS PLANT DESIGN

PROJ.	REV. NO.	REVISION	PRP'D	LEAD ENG	CHK'D/VERIF'D	APRV'D	APRV'D	APRV'D
N/A	5	INCORPORATED M-DCF-Z-00436.	APPROVALS MAINTAINED IN DCR/EDWS					
N/A	4	INCORPORATED M-DCP-Z-05006 (REF DCN'S P002 AND P006)	APPROVALS MAINTAINED IN DCR/EDWS/MICROFILM					09/20/10

INITIAL AND DATE

P-PA-Z-00042
E & PD DRAWING NO.

UNITED STATES DEPARTMENT OF ENERGY
SAVANNAH RIVER SITE

ORIGINAL SIGNED

PROJ.	NO.	REVISION	DFT	ENG	CHK	SPV	PE	DLP	DATE
S1780	0	ISSUED FOR DESIGN (IFD)		ORIGINAL		SIGNED			04/11/86
S1780	1	ISSUED FOR IFD		ORIGINAL		SIGNED			06/13/86
S1780	2	REVISED & REISSUED FOR IFD		ORIGINAL		SIGNED			06/13/86
S1780	3	ISSUED AS BUILT (IAB)		ORIGINAL		SIGNED			12/26/89

STANDARDS

REFERENCE DRAWINGS

W754522	P&ID		
W754524	P&ID		
W754540	FLOW DIAG.		

THIS DRAWING HAS BEEN FURNISHED BY E.I.DU PONT DE NEMOURS & CO. THE INFORMATION AND KNOW-HOW THEREON MAY NOT BE USED NOR THE DRAWING REPRODUCED WITHOUT THE WRITTEN PERMISSION OF DU PONT. ALL REPRODUCTIONS IN WHOLE OR IN PART, INCLUDING VENDOR'S SHOP DRAWINGS, SHALL BEAR OR REFER TO THIS STAMP.

		DATE
PROJECT	S1780	
SCALE	1/8"=1'-0"	
DRAWN	V. ARNAUDO	02/26/86
CHECKED		
APPROVED-I.C.R.		
APPROVED FINAL	GW OAKES	04/11/86

DRC-1 DURAND
E.I.DU PONT DE NEMOURS & CO., INC.
WILMINGTON, DELAWARE
ENGINEERING DEPARTMENT
W775926

LAST CADD. REV. BY R.A. KING DATE 09/12/18

NFO-10-13 (12/82)

Design Change Notice (DCN) Continuation Page

BEFORE

DCP No. M-DCP-Z-11003 | Revision 1 | Document No. W775926 | Revision 5
DCN No. M-DCP-Z-11003-P-00004 | Revision 1 | Project/Task No. N/A | Page 3 of 4

ANALYZE FOR SAFETY, ECOLOGY, AND MINIMUM ESSENTIAL DESIGN

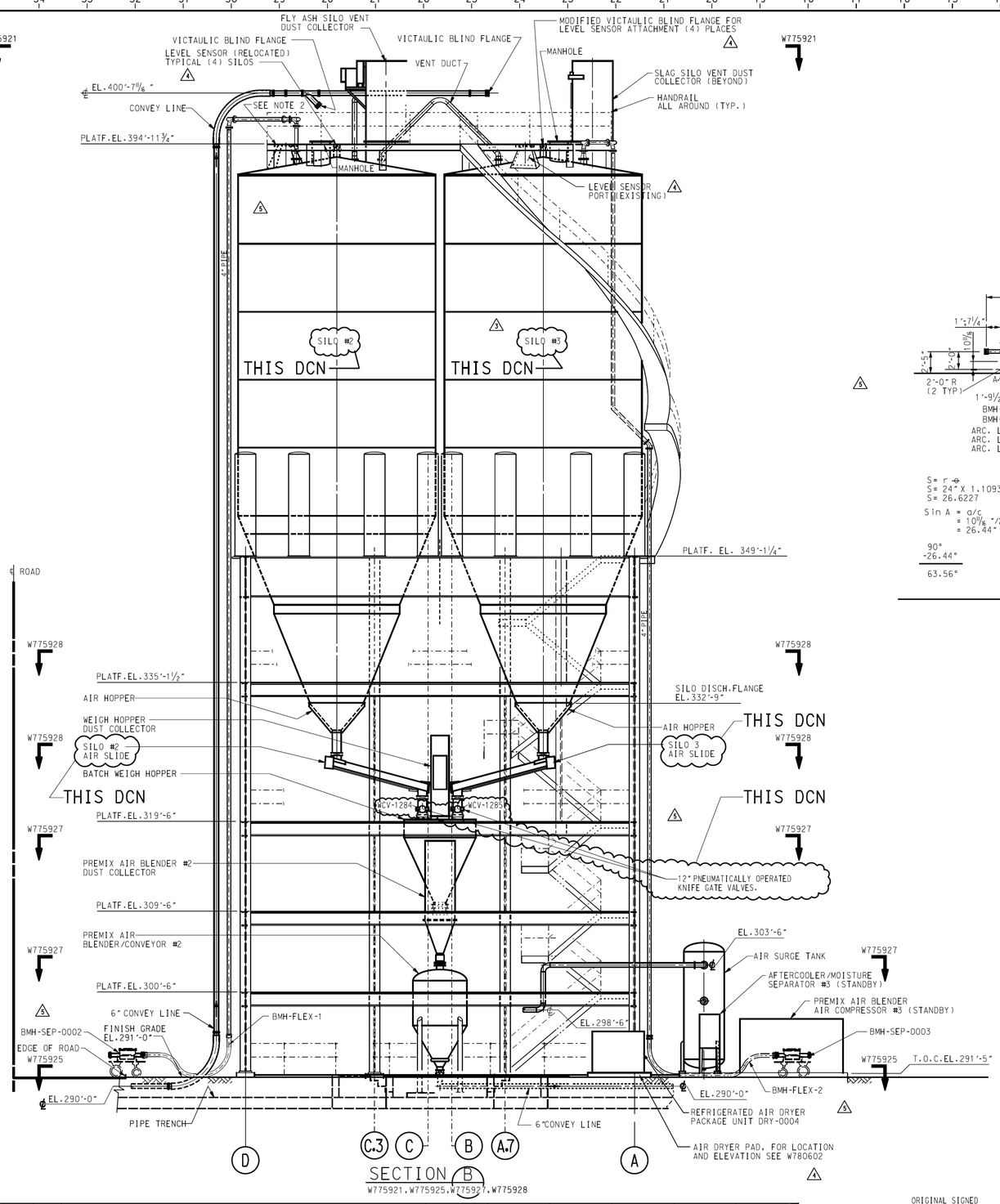

NOTES:

1. FOR GENERAL NOTES SEE DWG. W775920
2. THE EXISTING LEVEL SENSOR INSTRUMENT INSIDE THE LEVEL SENSOR PORT ON EACH SILO SHALL BE REMOVED. THE REMAINING FLANGED OPENING SHALL BE COVERED W/ A CORRESPONDING 150# BLIND FLANGE OR A MATCHING 1/4" THK. C.S. PLATE W/ A 1/8" THK.NEOPRENE GASKET. C.S. PLATE MATERIAL TO BE A-36, GALVANIZED OR PAINT IN ACCORDANCE WITH SRS ENGINEERING GUIDE: 09900-G.

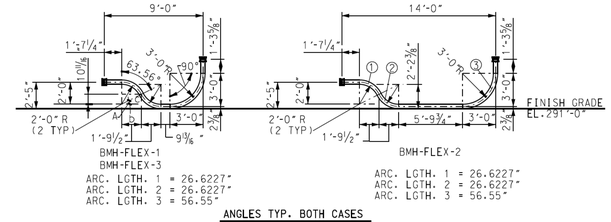

ANGLES TYP. BOTH CASES

S= r θ
S= 24" X 1.1093 RADIANS
S= 26.6227

S= r θ
S= 36" X 1.57 RADIANS
S= 56.548

S= r θ
S= 24" X 1.1093 RADIANS
S= 26.6227

S= r θ
S= 36" X 1.57 RADIANS
S= 56.548

Sin A = a/c
= 10 11/16"/24"
= 26.44°

90°
-26.44°
63.56°

FLEX HOSE DETAILS

W775926 LAST 5 REV.

P PA Z 00042 LAST 5 REVISION

NOTE:

THIS DRAWING IS TO BE USED FOR THE PURPOSE OF LOCATION AND INSTALLATION OF EQUIPMENT.

THIS DCN

0 1 2 4 8 12 16
3/8" = 1'-0"

ORIGINAL SIGNED

BECHTEL	BECHTEL NATIONAL INC. SAN FRANCISCO	JOB NO. 13239	
THIS DOCUMENT CONTAINS INFORMATION RELATING TO ACTIVITIES OF THE U.S. DEPARTMENT OF ENERGY. NOT TO BE REPRODUCED OR RELEASED WITHOUT PRIOR APPROVAL.			
M/F	BLDG. — / PROJ. S1780 / DA Z205 / TYPE 24	W775926	LAST 5 REV.

SAVANNAH RIVER PLANT-200S AREA
DEFENSE WASTE PROCESSING FACILITY-SLUDGE PLANT
CEMENT/FLY ASH SILOS-SECTION B
GENERAL ARRANGEMENT/EQUIPMENT LOCATION
PROCESS PLANT DESIGN

REV. NO.	REVISION	PRP'D	LEAD ENG	CHK'D/VERIF'D	APRV'D	APRV'D	APRV'D
N/A	5 INCORPORATED M-DCF-Z-00436.	APPROVALS MAINTAINED IN DCR/EDWS					
N/A	4 INCORPORATED M-DCP-Z-05006 (REF DCN'S P002 AND P006)	APPROVALS MAINTAINED IN DCR/EDWS/MICROFILM					09/20/10
PROJ.		INITIAL AND DATE					

P-PA-Z-00042
E & PD DRAWING NO.

UNITED STATES DEPARTMENT OF ENERGY
SAVANNAH RIVER SITE

PROJ	NO.	REVISION	DFT	ENG	CHK	SPV	PE	DUP	DATE
S1780	0	ISSUED FOR DESIGN (IFD)		ORIGINAL		SIGNED			04/11/86
S1780	1	ISSUED FOR IFD		ORIGINAL		SIGNED			06/13/86
S1780	2	REVISED & REISSUED FOR IFD		ORIGINAL		SIGNED			06/13/86
S1780	3	ISSUED AS BUILT (IAB)		ORIGINAL		SIGNED			12/26/89

STANDARDS

REFERENCE DRAWINGS		
W754522	P&ID	
W754524	P&ID	
W754540	FLOW DIAG	

THIS DRAWING HAS BEEN FURNISHED BY E.I.DU PONT DE NEMOURS & CO. THE INFORMATION AND KNOW-HOW THEREON MAY NOT BE USED NOR THE DRAWING REPRODUCED WITHOUT THE WRITTEN PERMISSION OF DU PONT. ALL REPRODUCTIONS IN WHOLE OR IN PART, INCLUDING VENDOR'S SHOP DRAWINGS, SHALL BEAR OR REFER TO THIS STAMP.

		DATE
PROJECT	S1780	
SCALE	3/8" = 1'-0"	
DRAWN	V ARNAUDO	02/26/86
CHECKED		
APPROVED-I.C.R.		
APPROVED FINAL	GW OAKES	04/11/86

DRC-1
IAB
E.I.DU PONT DE NEMOURS & CO., INC.
WILMINGTON, DELAWARE
ENGINEERING DEPARTMENT
W775926

LAST CADD. REV. BY R.A. KING DATE 09/12/18

NFO-10-13 (12/82)

Design Change Notice (DCN) Continuation Page

AFTER

DCP No. M-DCP-Z-11003 | DCN No. M-DCP-Z-11003-P-00004 | Revision 1 | Revision 1 | Document No. W775926 | Project/Task No. N/A | Revision 5 | Page 4 of 4

BEST AVAILABLE COPY ENTIRE DOCUMENT

Design Change Notice (DCN)

DCP Number	Revision	
M-DCP-Z-11003	1	
DCN No. M-DCP-Z-11003-P-00005	**Revision** 1	**Project/Task No** N/A

Design Change Notice (DCN)

Classification Reviewer: N/A

Date: 05/15/2019

Design Change Notice (DCN)

DCP Number	Revision	
M-DCP-Z-11003	1	
DCN No.	**Revision**	**Project/Task No**
M-DCP-Z-11003-P-00005	1	N/A

Document No. (Doc Rev)
W779822;4

Reason for Change (Be specific)
TO PROVIDE A PRECISE MEANS TO METER THE SILOS DISCHARGE INTO THE BATCH WEIGH HOPPER Z-205000-BMH-HPR-0001. THE AERATION SYSTEM WILL BE MODIFIED TO ALLOW FOR BETTER FLOW AND MONITORING AND MORE CONTROL OF THE AIR FLOW TO THE SILOS.

Description of Change
INSTALL NEW 12" KNIFE GATE VALVES, SEE PAGE 6.
PAGE 5 OF 7 OF THIS DCN HAS BEEN ADDED TO DWG. W779822 TO REFLECT AN ACCURATE ARRANGEMENT OF THE SILOS INCLUDING FIELD ROUTED SMALL BORE PROCESS AIR PIPING. SEE PAGES 6 AND 7 FOR PROCESS AIR PIPING CONFIGURATIONS AND DETAILS.

Engineering Approvals

Originator	Date	Responsible Engineer Manager	Date
SIMS, BASIL H.	05/15/2019	CLARK, STEPHEN H.	05/15/2019

Verifier/Checker	Date	Discipline
MELVIN, STEVEN M.	05/15/2019	P-PLANT DESIGN

Verification Method(s)
Design Check (GS/PS only)

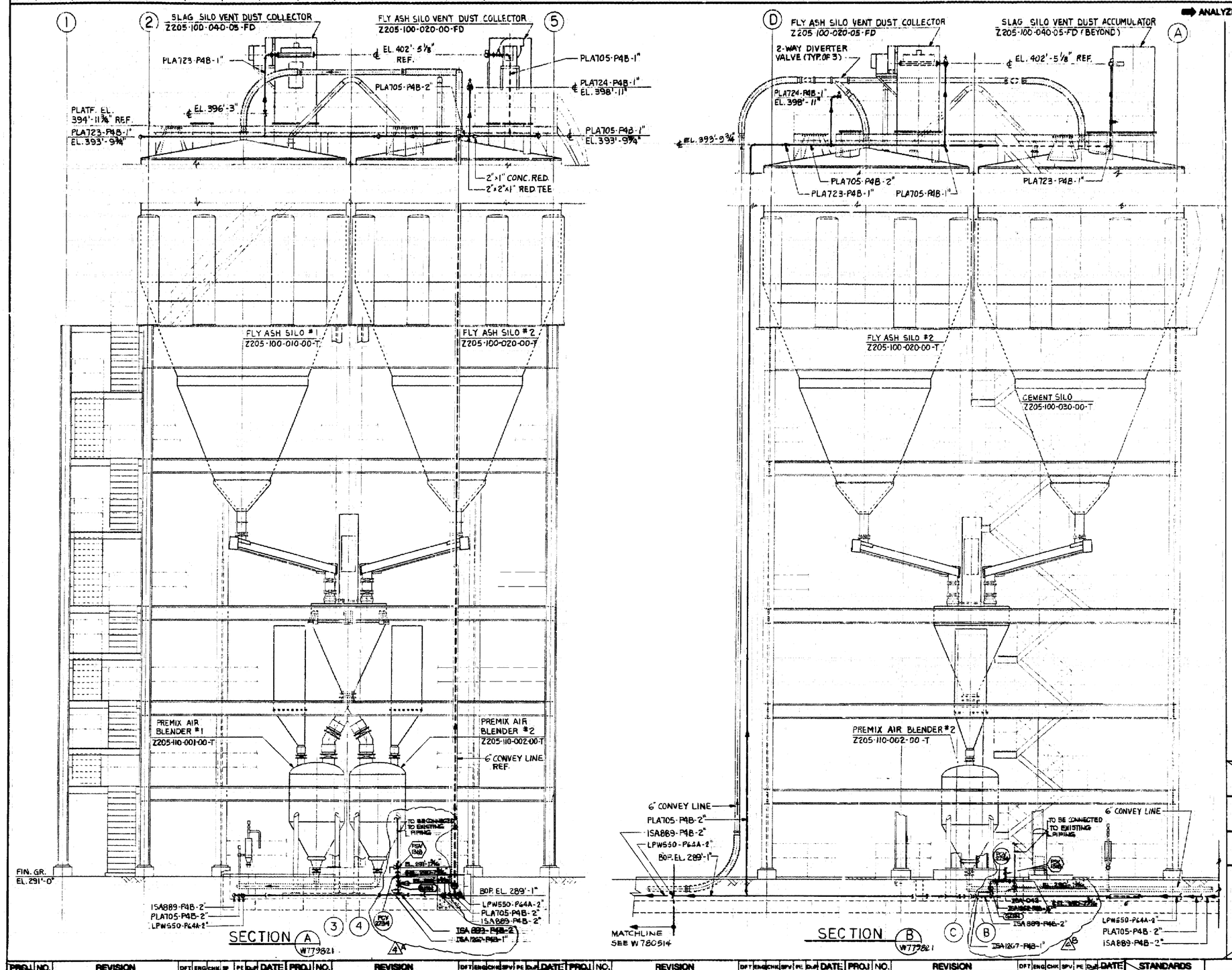

➡ ANALYZE FOR SAFETY, ECOLOGY, AND MINIMUM ESSENTIAL DESIGN ⬅

NOTE:

1. SEE DWG. W779821 FOR GENERAL NOTE.

W779822 LAST 4 REV.

BECHTEL NATIONAL INC.
SAN FRANCISCO
JOB NO. 13230

THIS DOCUMENT CONTAINS INFORMATION RELATING TO ACTIVITIES OF THE U.S. DEPARTMENT OF ENERGY. NOT TO BE REPRODUCED OR RELEASED WITHOUT PRIOR APPROVAL.

M/F	BLDG.	PROJ.	DA	TYPE		LAST
	—	S1780	Z205	23	W779822	4 REV.

SAVANNAH RIVER PLANT-200Z AREA
DEFENSE WASTE PROCESSING FACILITY-SALTSTONE
BULK MATERIAL HANDLING AREA-Z205
SECTION - PIPING - LAYOUT
PROCESS — PLANT DESIGN

PROJ.	NO.	REVISION	DFT	ENG	CHK	SPV	PE	DUP	DATE
S1780	3	SLAG WAS CEMENT, CEMENT WAS FLY ASH PER IDM-C373 & WAE05-18							
S1780	4	CONNECT A NEW LINE ISA1267-P4B-1" IN LINE ISA889-P4B-2" INSTRUMENT AIR HEADER PER DCF 5372							
S1780	5	ADDED PCV-2734, PCV-2734-S, GSM PER DCF-5372							
S1780	1	ISSUED FOR FINAL CONSTRUCTION (FCR)	LD	LJV					5-21-88
S1780	2	REVISED & REISSUED FOR FCR	RJT	LJV					6-13-88
S1780	3	INCORP. IDM PD NOTES	RJT						6-30-88
S1780	4	REVISED & REISSUED FOR F.C.R.	SS						11-11-88
S1780	5	REVISED AND REISSUED FOR DCF-5372	WP						10-13-89

STANDARDS

REFERENCE DRAWINGS: W775922, W775926

THIS DRAWING HAS BEEN FURNISHED BY E. I. DU PONT DE NEMOURS & CO. THE INFORMATION AND KNOW-HOW THEREON MAY NOT BE USED NOR THE DRAWING REPRODUCED WITHOUT THE WRITTEN PERMISSION OF DU PONT. ALL REPRODUCTIONS IN WHOLE OR IN PART, INCLUDING VENDOR'S SHOP DRAWINGS, SHALL BEAR OR REFER TO THIS STAMP.

PROJECT: S1780
SCALE: 1/4" = 1'-0"
DATE:
DRAWN: ORIGINAL SIGNED
CHECKED:
APPROVED-I.C.R.: NOT REQUIRED
APPROVED-FINAL: NOT REQUIRED
DRC-3
E. I. DU PONT DE NEMOURS & CO., INC.
WILMINGTON, DELAWARE
ENGINEERING DEPARTMENT
W779822

BEFORE

Design Change Notice (DCN)
Continuation Page

DCP No.	Revision	Document No.	Revision	Page
M-DCP-Z-11003	1	W779822	4	3 of 7
DCN No. M-DCP-Z-11003-P-00005	1	Project/Task No. N/A		

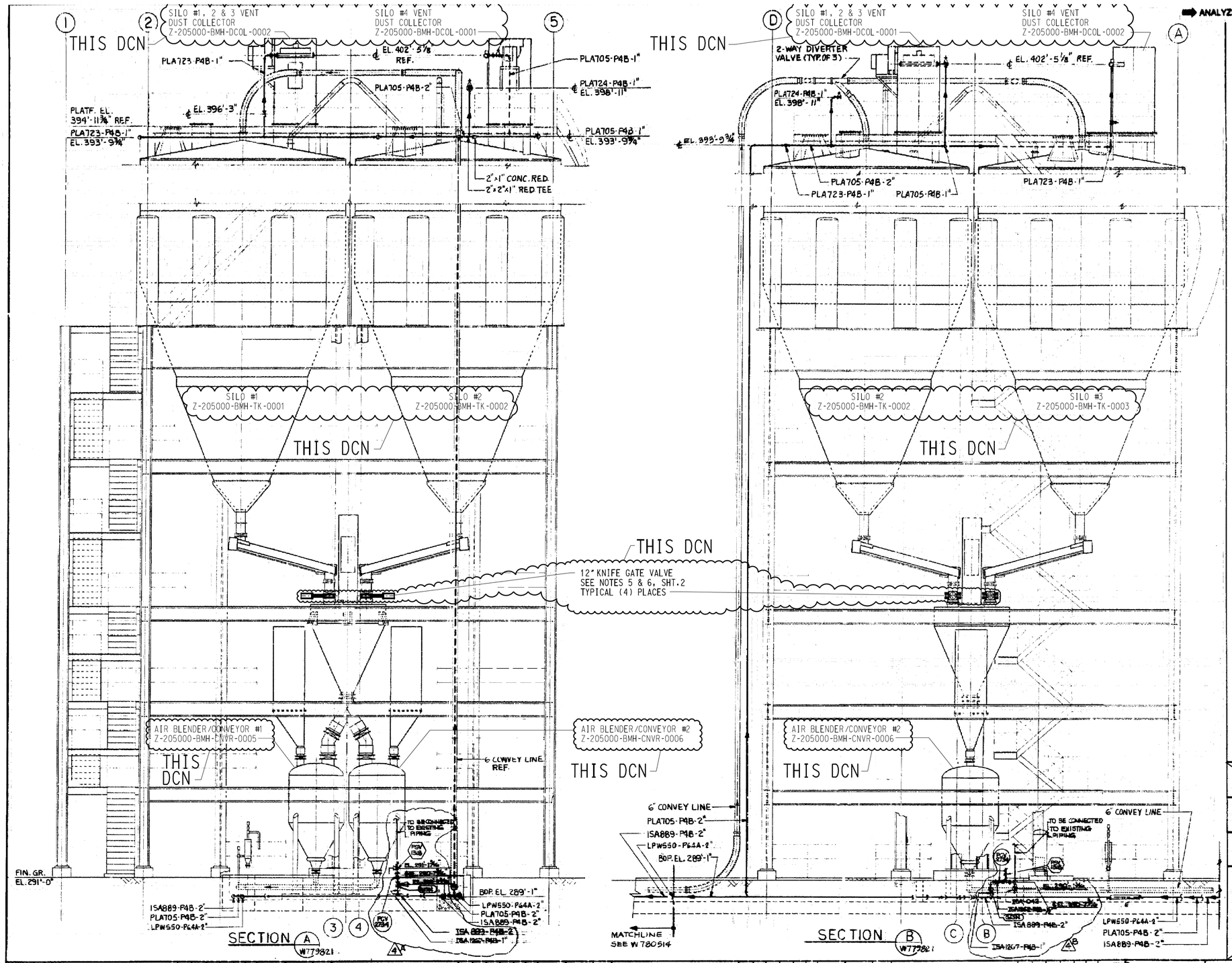

➡ ANALYZE FOR SAFETY, ECOLOGY, AND MINIMUM ESSENTIAL DESIGN ⬅

NOTE:

1. SEE DWG. W779821 FOR GENERAL NOTE.

THIS IS A HYBRID CADD PLOT

REVISION REQUIRES PROPER RASTER/VECTOR (I/RAS) SOFTWARE. CONTACT PD&CS ENGINEERING AUTOMATION GROUP FOR FURTHER INFORMATION. DO NOT REVISE RASTER OR VECTOR FILES SEPARATELY.

THIS DCN

W779822 LAST 4 REV.

THIS DCN

BECHTEL NATIONAL INC. SAN FRANCISCO — JOB NO. 13238

THIS DOCUMENT CONTAINS INFORMATION RELATING TO ACTIVITIES OF THE U.S. DEPARTMENT OF ENERGY. NOT TO BE REPRODUCED OR RELEASED WITHOUT PRIOR APPROVAL.

M/F	BLDG.	PROJ.	DA	TYPE		LAST
	—	S1780	Z205	23	W779822	4 REV.

SAVANNAH RIVER PLANT-200Z AREA

DEFENSE WASTE PROCESSING FACILITY-SALTSTONE

BULK MATERIAL HANDLING AREA-Z205

SECTION - PIPING - LAYOUT

PROCESS — PLANT DESIGN

PROJ.	NO.	REVISION	DFT	ENG	CHK	SP	PE	DUP	DATE
S1780	3A	SLAG WAS CEMENT, CEMENT WAS							
		FLY ASH PER IDM-C373 & WMP-05-18							
S1780	4A	CONNECT A NEW LINE ISA1267-P4B-1"							
		IN LINE ISA889-P4B-2" INSTRUMENT AIR							
		HEADER PER DCF 5372							
S1780	4B	ADDED PCV-2316, PCV-2734, GEN.							
		PER DCF-5372							

PROJ.	NO.	REVISION	DFT	ENG	CHK	SPV	PE	DUP	DATE
S1780	1	ISSUED FOR FINAL CONSTRUCTION (ROD)	[illegible]	[illegible]	[illegible]	[illegible]	[illegible]	[illegible]	5/20/96
S1780	2	REVISED & REISSUED FOR FCR	[illegible]	[illegible]	[illegible]	[illegible]	[illegible]	[illegible]	6-13-96
S1780	3	INCORP. IDM PD 1603	RIT	[illegible]	[illegible]	[illegible]	[illegible]	[illegible]	6-30-99
S1780	4	REVISED & REISSUED FOR F.C.R.	SS	[illegible]	[illegible]	[illegible]	—	—	11-11-98
S1780	5	REVISED AND REISSUED FOR DCF-5372	WP	[illegible]	[illegible]	[illegible]	—	—	11-13-99

STANDARDS	REFERENCE DRAWINGS	
	W775922	M-ML-Z-00010
	W775926	C-CLC-Z-00082
		W754522
		W754524
		W779821

THIS DRAWING HAS BEEN FURNISHED BY E. I. DU PONT DE NEMOURS & CO. THE INFORMATION AND KNOW-HOW THEREON MAY NOT BE USED NOR THE DRAWING REPRODUCED WITHOUT THE WRITTEN PERMISSION OF DU PONT. ALL REPRODUCTIONS IN WHOLE OR IN PART, INCLUDING VENDOR'S SHOP DRAWINGS, SHALL BEAR OR REFER TO THIS STAMP.

PROJECT S1780
SCALE 1/4" = 1'-0" DATE
DRAWN ORIGINAL SIGNED
CHECKED
APPROVED NOT REQUIRED
I.C.R.
APPROVED NOT REQUIRED
FINAL
DRC-5
E. I. DU PONT DE NEMOURS & CO., INC. WILMINGTON, DELAWARE ENGINEERING DEPARTMENT

W779822

SH.1 of 3

AFTER

Design Change Notice (DCN) Continuation Page

DCP No.	Revision	Document No.	Revision	Page
M-DCP-Z-11003	1	W779822	4	4 of 7
DCN No. M-DCP-Z-11003-P-00005	Revision 1	Project/Task No. N/A		

N/A
SRP DRAWING NO.

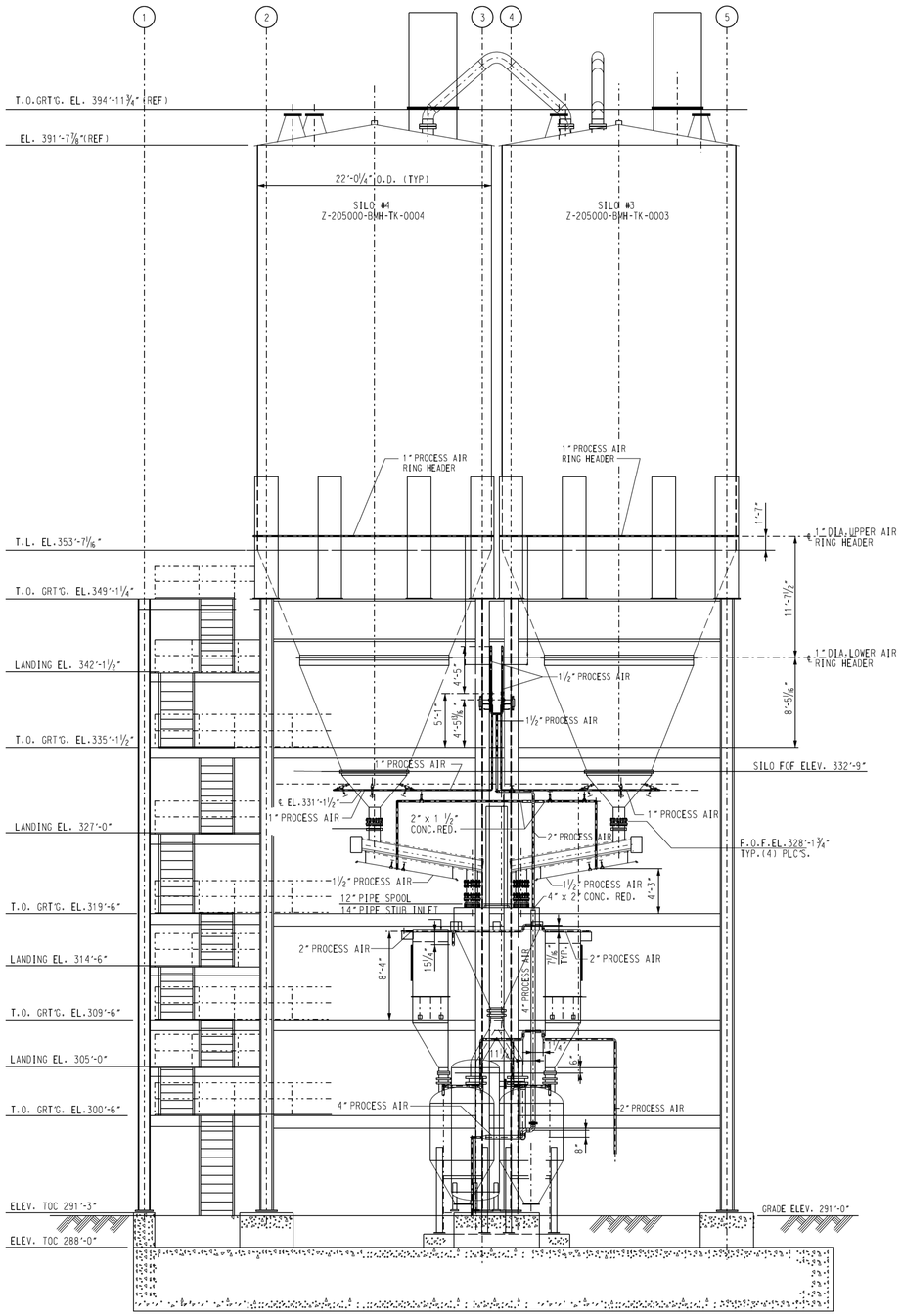

SECTION C
W779821 SHT.2,3,4 & 5
ELEVATION LOOKING EAST

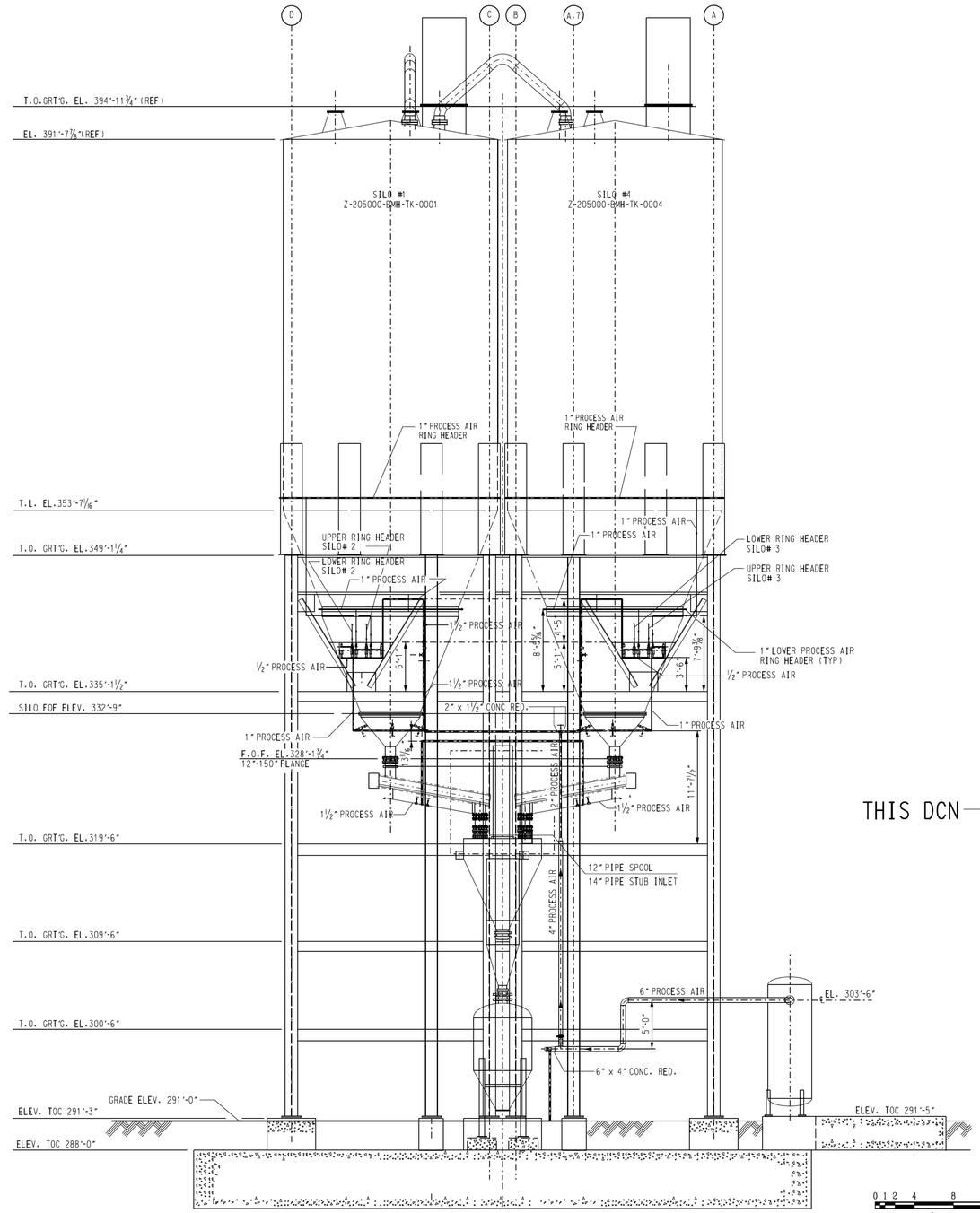

THIS DCN

SECTION D
W779821 SHT.2,3,4 & 5
ELEVATION LOOKING NORTH

0 1 2 4 8 12 16
3/16" = 1'-0"

THIS DCN

UNITED STATES DEPARTMENT OF ENERGY
SAVANNAH RIVER SITE

THIS DRAWING WAS BEEN FURNISHED BY THE SAVANNAH RIVER SITE. THE INFORMATION AND KNOW HOW THEREON MAY NOT BE USED NOR THE DRAWING REPRODUCED WITHOUT WRITTEN PERMISSION OF THE PRIME CONTRACTOR. NO REPRODUCTIONS IN WHOLE OR IN PART, INCLUDING VENDOR'S SHOP DRAWINGS, SHALL BEAR OR REFER TO THIS STAMP.

TITLE
SAVANNAH RIVER PLANT-200Z AREA
DWPF - SALTSTONE AREA Z205
BULK MATERIAL HANDLING
PIPING ARRANGEMENT-SECTIONS
PROCESS PLANT DESIGN

SRP DRAWING NO.	SHEET NO.	DRAWING REV.
W779822	2 OF 3	4

Data shown on this drawing is only applicable when plotted at 30"x42" (actual drawing size)

AS FOUND
FIELD CONDITIONS

Design Change Notice (DCN)
Continuation Page

DCP No. M-DCP-Z-11003	Revision 1	Document No. W779822	Revision 4
DCN No. M-DCP-Z-11003-P-00005	Revision 1	Project/Task No. N/A	Page 5 of 7

REF FILES YES NO LEVEL 1234567890123456789012345678901234567890123456789012345678901234567890123 PLOT DATE TIME DATE

SRP DRAWING NO. N/A

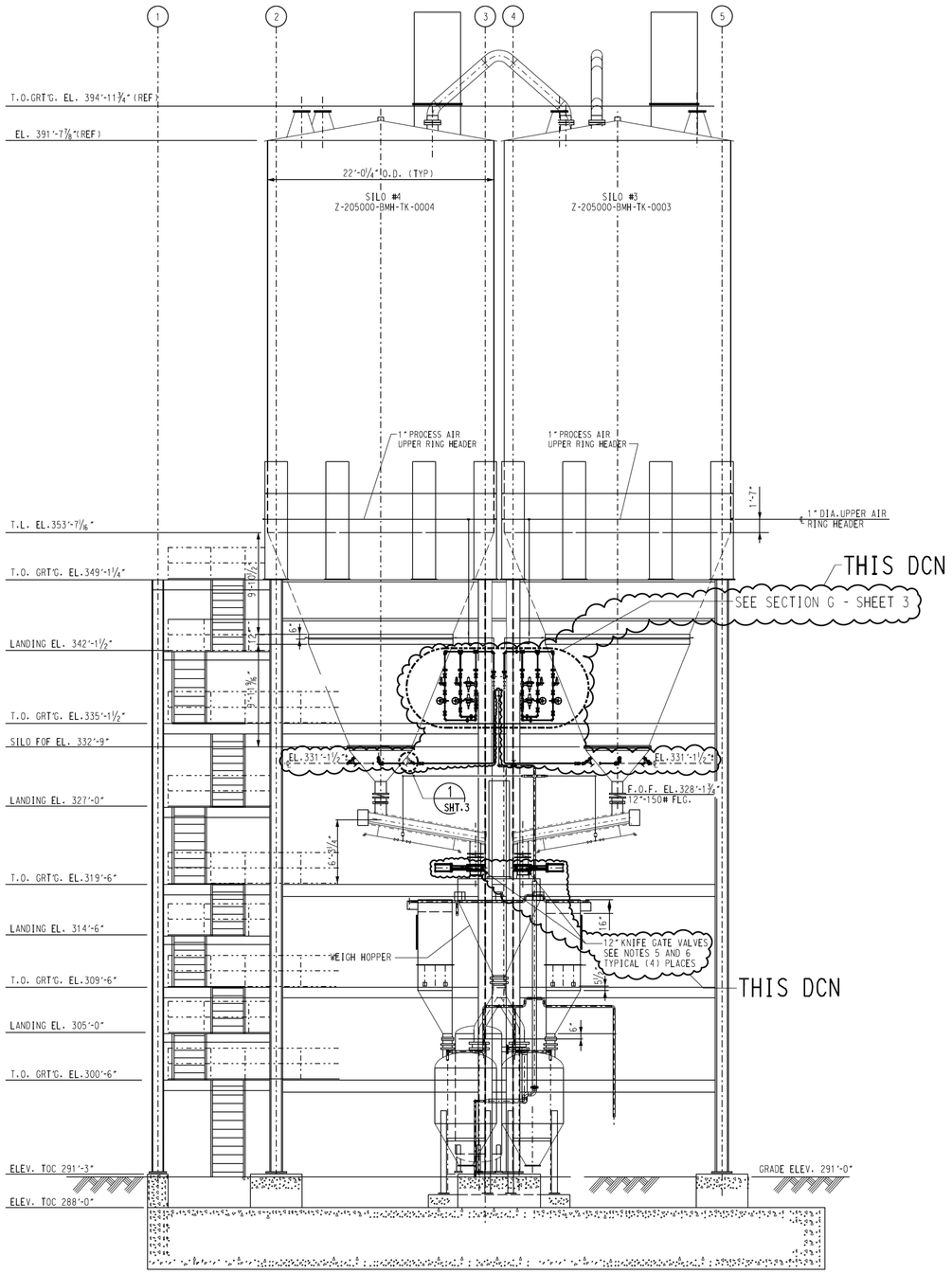

SECTION C W779821,SHT.2,3,4 & 5

ELEVATION LOOKING EAST

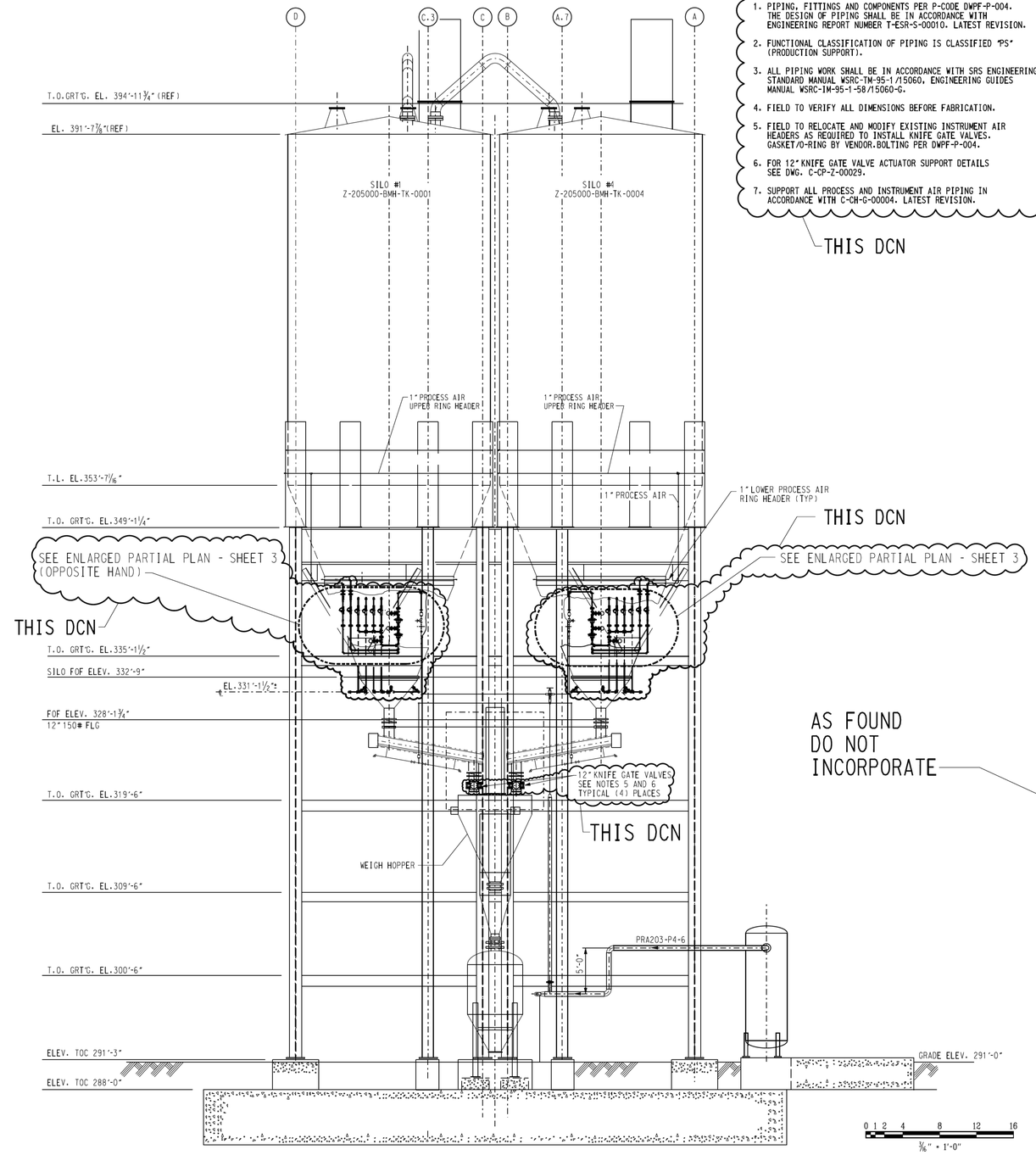

SECTION D W779821,SHT.2,3,4 & 5

ELEVATION LOOKING NORTH

NOTES:

1. PIPING, FITTINGS AND COMPONENTS PER P-CODE DWPF-P-004. THE DESIGN OF PIPING SHALL BE IN ACCORDANCE WITH ENGINEERING REPORT NUMBER T-ESR-S-00010. LATEST REVISION.
2. FUNCTIONAL CLASSIFICATION OF PIPING IS CLASSIFIED "PS" (PRODUCTION SUPPORT).
3. ALL PIPING WORK SHALL BE IN ACCORDANCE WITH SRS ENGINEERING STANDARD MANUAL WSRC-TM-95-1/15060, ENGINEERING GUIDES MANUAL WSRC-IM-95-1-58/15060-G.
4. FIELD TO VERIFY ALL DIMENSIONS BEFORE FABRICATION.
5. FIELD TO RELOCATE AND MODIFY EXISTING INSTRUMENT AIR HEADERS AS REQUIRED TO INSTALL KNIFE GATE VALVES. GASKET/O-RING BY VENDOR.BOLTING PER DWPF-P-004.
6. FOR 12" KNIFE GATE VALVE ACTUATOR SUPPORT DETAILS SEE DWG. C-CP-Z-00029.
7. SUPPORT ALL PROCESS AND INSTRUMENT AIR PIPING IN ACCORDANCE WITH C-CH-G-00004. LATEST REVISION.

THIS DCN

UNITED STATES DEPARTMENT OF ENERGY

SAVANNAH RIVER SITE

THIS DRAWING WAS BEEN FURNISHED BY THE SAVANNAH RIVER SITE. THE INFORMATION AND KNOW HOW THEREON MAY NOT BE USED NOR THE DRAWING REPRODUCED WITHOUT WRITTEN PERMISSION OF THE PRIME CONTRACTOR. ALL REPRODUCTIONS IN WHOLE OR IN PART, INCLUDING VENDOR'S SHOP DRAWINGS, SHALL BEAR OR REFER TO THIS STAMP.

TITLE
SAVANNAH RIVER PLANT-200Z AREA
DWPF - SALTSTONE AREA Z205
BULK MATERIAL HANDLING
PIPING ARRANGEMENT-SECTIONS
PROCESS PLANT DESIGN

THIS DCN

SRP DRAWING NO.	SHEET NO.	DRAWING REV.
W779822	2 OF 3	4

Scale shown on all drawings is only applicable when plotted at 30"x42" (actual drawing size)

AFTER

Design Change Notice (DCN) Continuation Page

DCP No.	M-DCP-Z-11003	Revision	1	Document No.	W779822	Revision	4
DCN No.	M-DCP-Z-11003-P-00005	Revision	1	Project/Task No.	N/A	Page	6 of 7

REF FILES YES NO LEVEL 1234567890123456789012345678901234567890123456789012345678901234567890123 PLOT DATE TIME DATE

SHP DRAWING NO. N/A

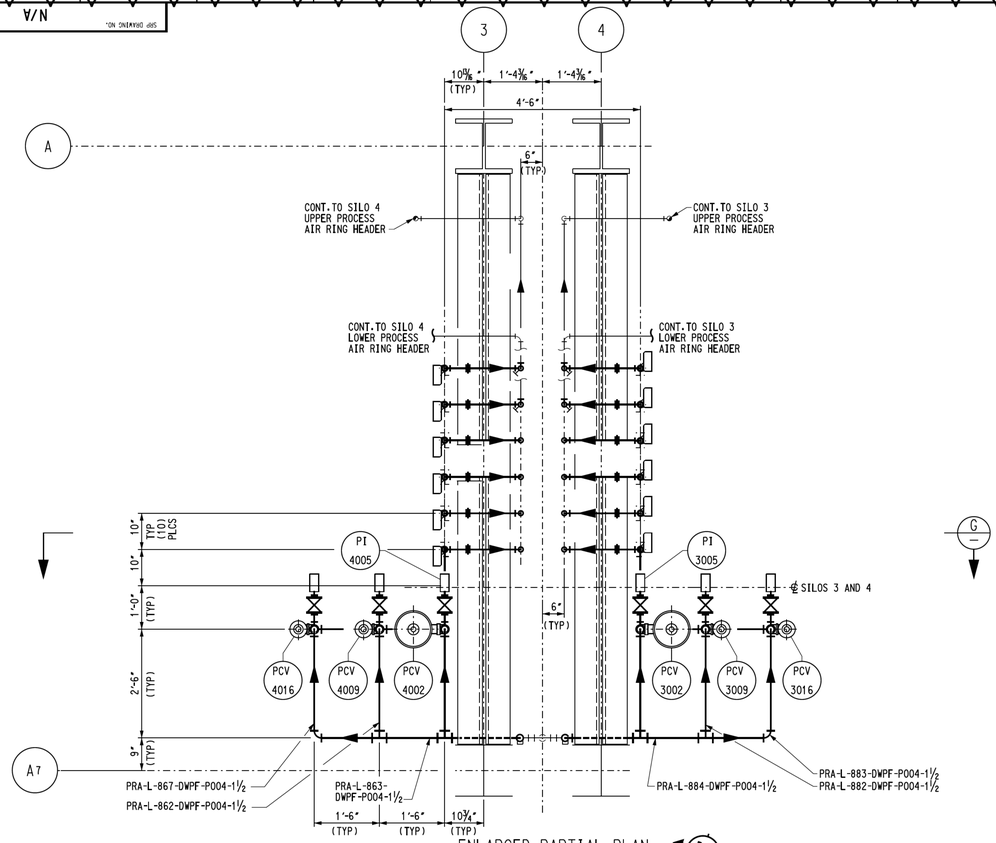

ENLARGED PARTIAL PLAN

TYPICAL (1) PLACE AS SHOWN SILOS 3 AND 4
TYPICAL (1) PLACE OPPOSITE HAND SILOS 1 AND 2

¾" = 1'-0"

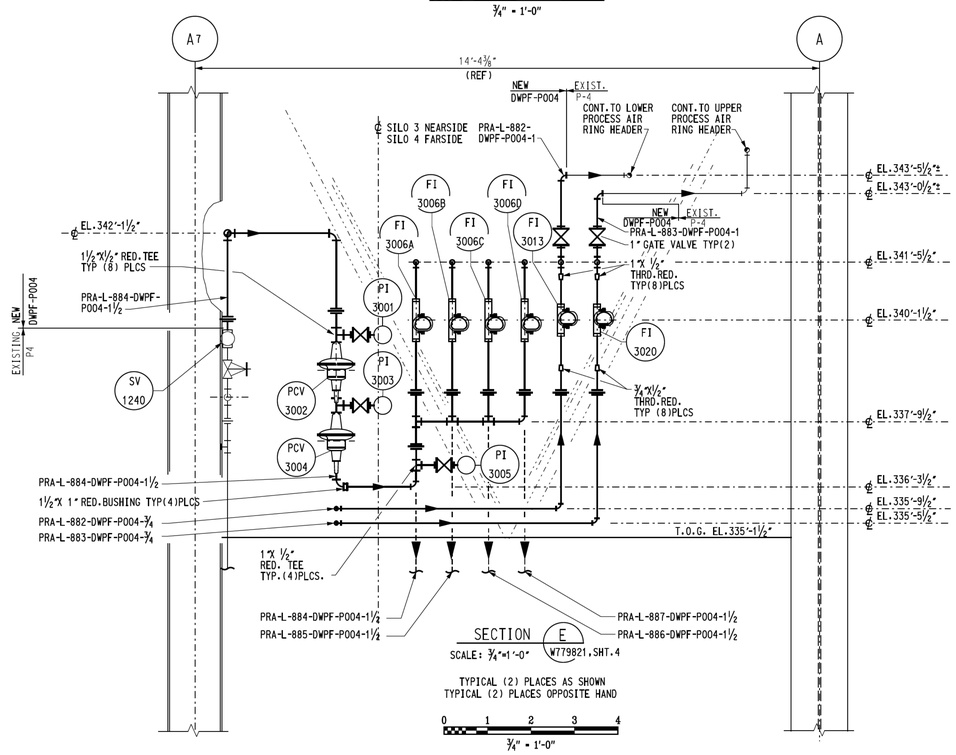

SECTION E
SCALE: ¾"=1'-0" W779821,SHT.4

TYPICAL (2) PLACES AS SHOWN
TYPICAL (2) PLACES OPPOSITE HAND

¾" = 1'-0"

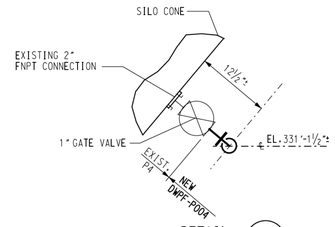

DETAIL 1 SHT.2

TYPICAL (16) PLACES AS SHOWN

NOTES:

1. PIPING ARRANGEMENT SHOWN FOR SILOS 3 AND 4. PIPING ARRANGEMENT FOR SILOS 1 AND 2 TO BE OPPOSITE HAND OF SILOS 3 AND 4.
   COMPONENT NUMBERING TO BE PER THE FOLLOWING:
   SILO 1- M-M6-Z-00108 SHT.2
   SILO 2- M-M6-Z-00108 SHT.3
   SILO 3- M-M6-Z-00108 SHT.4
   SILO 4- M-M6-Z-00108 SHT.1
2. REFER TO DRAWING W779821 SHT. 3 FOR PIPING ORIENTATION AT T.O.GRT'G. EL. 349'-1¼".
3. VENDOR PROCURED EQUIPMENT FOR PROCESS AIR TO BE INSTALLED BY FIELD PER P-CODE DWPF-P004.

THIS DCN

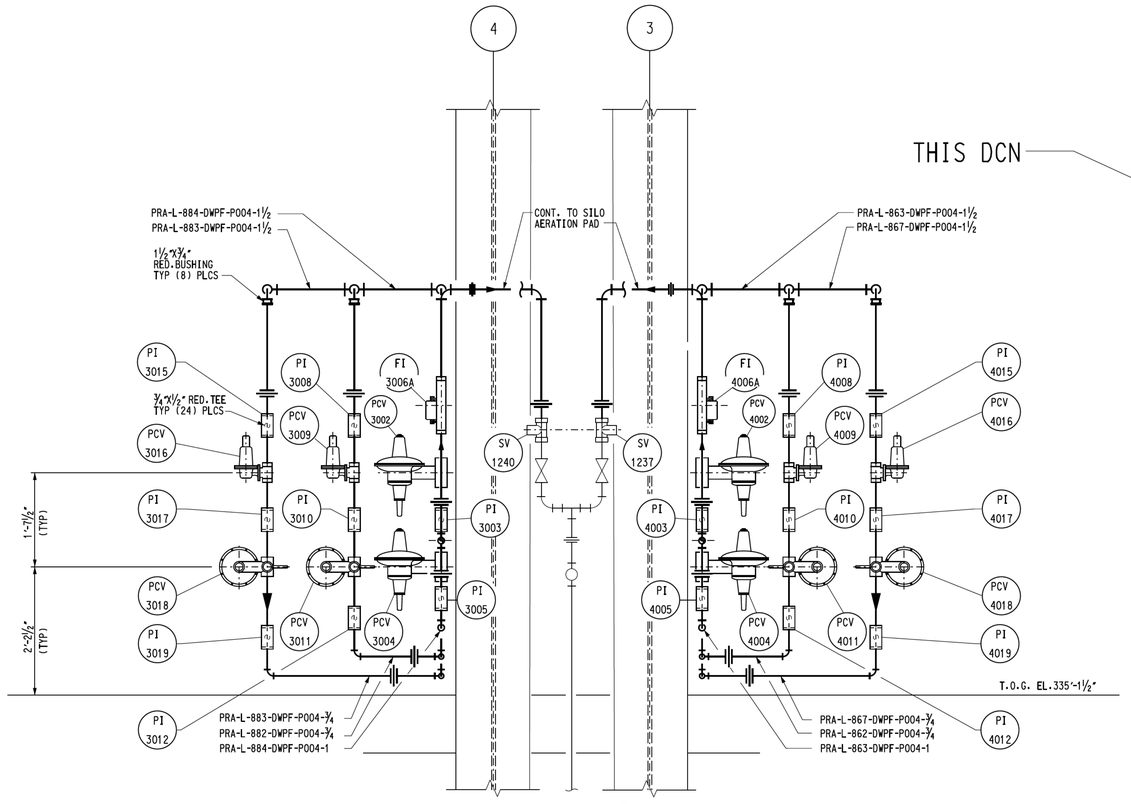

SECTION G
SCALE: 1"=1'-0"

TYPICAL (2) PLACES AS SHOWN
TYPICAL (2) PLACES OPPOSITE HAND

1" = 1'-0"

UNITED STATES DEPARTMENT OF ENERGY

SAVANNAH RIVER SITE

THIS DRAWING HAS BEEN FURNISHED BY THE SAVANNAH RIVER SITE, AND INFORMATION AND DATA HEREIN MAY NOT BE USED OR THE DRAWING REPRODUCED WITHOUT WRITTEN PERMISSION OF THE PRIME CONTRACTOR. ALL REPRODUCTIONS IN WHOLE OR IN PART, INCLUDING VENDOR'S SHOP DRAWINGS, SHALL BEAR OR REFER TO THIS STAMP.

TITLE
SAVANNAH RIVER PLANT-200Z AREA
DWPF - SALTSTONE AREA Z205
BULK MATERIAL HANDLING
PIPING ARRANGEMENT-SECTIONS
PROCESS PLANT DESIGN

SHP DRAWING NO.	SHEET NO.	DRAWING REV.
W779822	3 OF 3	4

AFTER

Design Change Notice (DCN) Continuation Page

DCN No.	Revision	DCP No.	Revision	Document No.	Revision	Project/Task No.	Page
M-DCP-Z-11003-P-00005	1	M-DCP-Z-11003	1	W779822	4	N/A	7 of 7

REF FILES YES NO LEVEL: 1234567890123456789012345678901234567890123456789012345678901234567890123 PLOT DATE TIME DATE: CAD MGR: BY: CONTROL NO. drawing is original size when plotted at 30"x42" (actual drawing size)

BEST AVAILABLE COPY FOR ENTIRE DOCUMENT

Design Change Notice (DCN)

DCP Number	Revision	
M-DCP-Z-11003	1	
DCN No. M-DCP-Z-11003-P-00006	**Revision** 1	**Project/Task No** N/A

Design Change Notice (DCN)

Classification Reviewer:	N/A
Date:	05/15/2019

Design Change Notice (DCN)

DCP Number	Revision	
M-DCP-Z-11003	1	
DCN No.	**Revision**	**Project/Task No**
M-DCP-Z-11003-P-00006	1	N/A

Document No. (Doc Rev)
W779821;5

Reason for Change (Be specific)
TO PROVIDE A PRECISE MEANS TO METER THE SILOS DISCHARGE INTO THE BATCH WEIGH HOPPER Z-205000-BMH-HPR-0001. THE AERATION SYSTEM WILL BE MODIFIED TO ALLOW FOR BETTER MONITORING AND MORE CONTROL OF THE AIR FLOW TO THE SILOS.

Description of Change
INSTALL NEW 12" KNIFE GATE VALVES, SEE PAGE 6.
PAGES 5, 6 AND 7 HAVE BEEN ADDED TO DWG. W779821 TO REFLECT AN ACCURATE ARRANGEMENT OF THE SILOS INCLUDING FILED ROUTED SMALL BORE PROCESS AIR PIPING. SEE PAGES 8 AND 9 FOR PROCESS AIR PIPING CONFIGURATION AND DETAILS.

Engineering Approvals

Originator	Date	Responsible Engineer Manager	Date
SIMS, BASIL H.	05/15/2019	CLARK, STEPHEN H.	05/15/2019

Verifier/Checker	Date	Discipline
MELVIN, STEVEN M.	05/15/2019	P-PLANT DESIGN

Verification Method(s)
Design Check (GS/PS only)

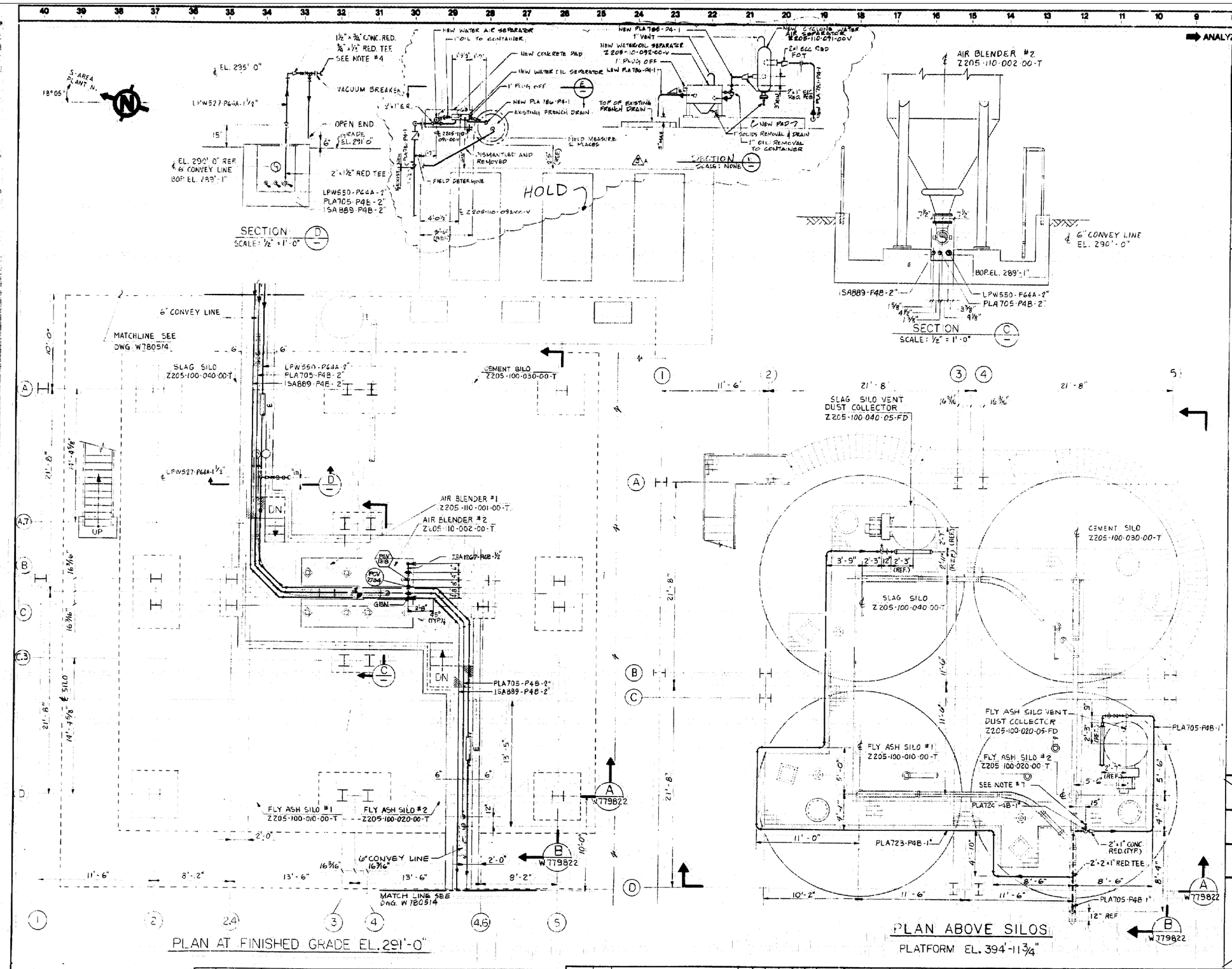

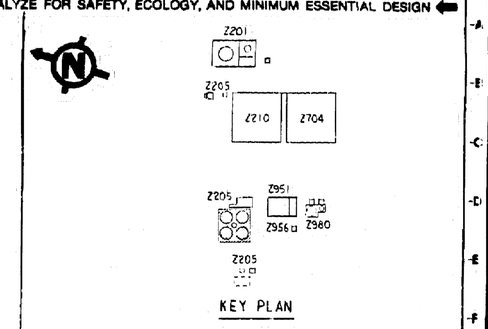

GENERAL NOTE:

1. ALL PIPES UNDER PLATFORM AND TRENCH ARE SHOWN IN SOLID LINES FOR CLARITY.
2. THE 6"-CONVEY LINE IS PROVIDED IN VENDOR'S MATERIAL REQUISITION PACKAGE MH-21144.
3. THE ELEVATION ARE WITH REFERENCE TO FINISH GRADE ELEVATION OF 0'-0" (REF. EL. 291'-0").
4. HOSE COUPLING SHALL BE IN ACCORDANCE WITH SPEC. P-25.
5. PIPING SHOWN ON DRAWING WILL BE IDENTIFIED AS FOLLOWS:

   FSW254-F53A-6
   - SYSTEM OR COMMODITY CODE
   - SEQUENCE NUMBER
   - NOMINAL PIPE SIZE (IN.)
   - PIPE MATERIAL SPECIFICATION

6. FURNISH AND INSTALL REQUIRED PIPING AND VALVES PER SPEC. P-11.
7. FOR CONTINUATION SEE INSTR. LOCATION DIAGRAM DWG. W768599, W768600, W768601, W768602, W768603 & W768604.

W 779821 | LAST 5 REV.

BECHTEL NATIONAL INC. SAN FRANCISCO | JOB NO. 13239

THIS DOCUMENT CONTAINS INFORMATION RELATING TO ACTIVITIES OF THE U.S. DEPARTMENT OF ENERGY. NOT TO BE REPRODUCED OR RELEASED WITHOUT PRIOR APPROVAL.

M/F	BLDG.	PROJ.	DA	TYPE		LAST
		S1780	Z205	23	W779821	5 REV.

SAVANNAH RIVER PLANT-200Z AREA

DEFENSE WASTE PROCESSING FACILITY-SALTSTONE

BULK MATERIAL HANDLING AREA-Z205-PLAN
PIPING LAYOUT
PROCESS

PLANT DESIGN

PROJ.	REV. NO.	DATE	REVISION	PRPD	CHK'D	DEM	MPE

UNITED STATES DEPARTMENT OF ENERGY
SAVANNAH RIVER SITE

REF'D DRAWING NO.

PROJ.	NO.	REVISION	DFT	ENG	CHK	SPV	PE	DUP	DATE
S1780	4A	ADDED VACUUM BREAKER PER WAP DS-241 & DCF-2237							
S1780	4B	SLAG WAS CEMENT. CEMENT WAS FLY ASH PER 10M-C378 6							
		WAP DS-279							
S1780		CONNECT A NEW LINE ISA1267-P4B-2" INSTRUMENT							
		1" IN LINE ISA889-P4B-2" INSTRUMENT							
		AIR HEADER PER DCF 5372 AND							
		ADDED PSV-1618, PCV-2734, GISN PER DCF 5372							
S1780	5	REVISED PER DCN 4A							

PROJ.	NO.	REVISION	DFT	ENG	CHK	SPV	PE	DUP	DATE
S1780		ISSUED FOR FINAL CONSTRUCTION (FCR)							
S1780		REVISED & REISSUED FOR FINAL CONSTRUCTION (FCR)							
S1780		UNDER DCN 1A PER 10M-P0103							
		REVISED & REISSUED FOR 4B							
S1780		REVISED AND REISSUED FOR DCF 5372							
S1780		REVISED & REISSUED FOR FCR PER DCF-6787 (DCN-4A)							
		UNDER HOLD-NOT IMPLEMENTED							

STANDARDS	REFERENCE DRAWINGS	
	W 775921	W 754529
	W 775925	W 754622
	W 754520	W 754642
	W 754522	W 780514
	W 754524	

THIS DRAWING HAS BEEN FURNISHED BY E. I. DU PONT DE NEMOURS & CO. THE INFORMATION AND KNOW-HOW THEREON MAY NOT BE USED NOR THE DRAWING REPRODUCED WITHOUT THE WRITTEN PERMISSION OF DU PONT. ALL REPRODUCTIONS IN WHOLE OR IN PART, INCLUDING VENDOR'S SHOP DRAWINGS, SHALL BEAR OR REFER TO THIS STAMP.

PROJECT	S1780
SCALE	1/4" = 1'-0" U.N.O.
DRAWN	Y.G. 11/25/8
CHECKED	
APPROVED I.C.R.	NOT REQUIRED
APPROVED FINAL	NOT REQUIRED

DRC-3
E. I. DU PONT DE NEMOURS & CO., INC.
WILMINGTON, DELAWARE
ENGINEERING DEPARTMENT
W 779821

BEFORE

Design Change Notice (DCN) Continuation Page

DCP No.	M-DCP-Z-11003	Revision	1	Document No.	W779821	Revision	5
DCN No.	M-DCP-Z-11003-P-00006	Revision	1	Project/Task No.	N/A	Page	3 of 9

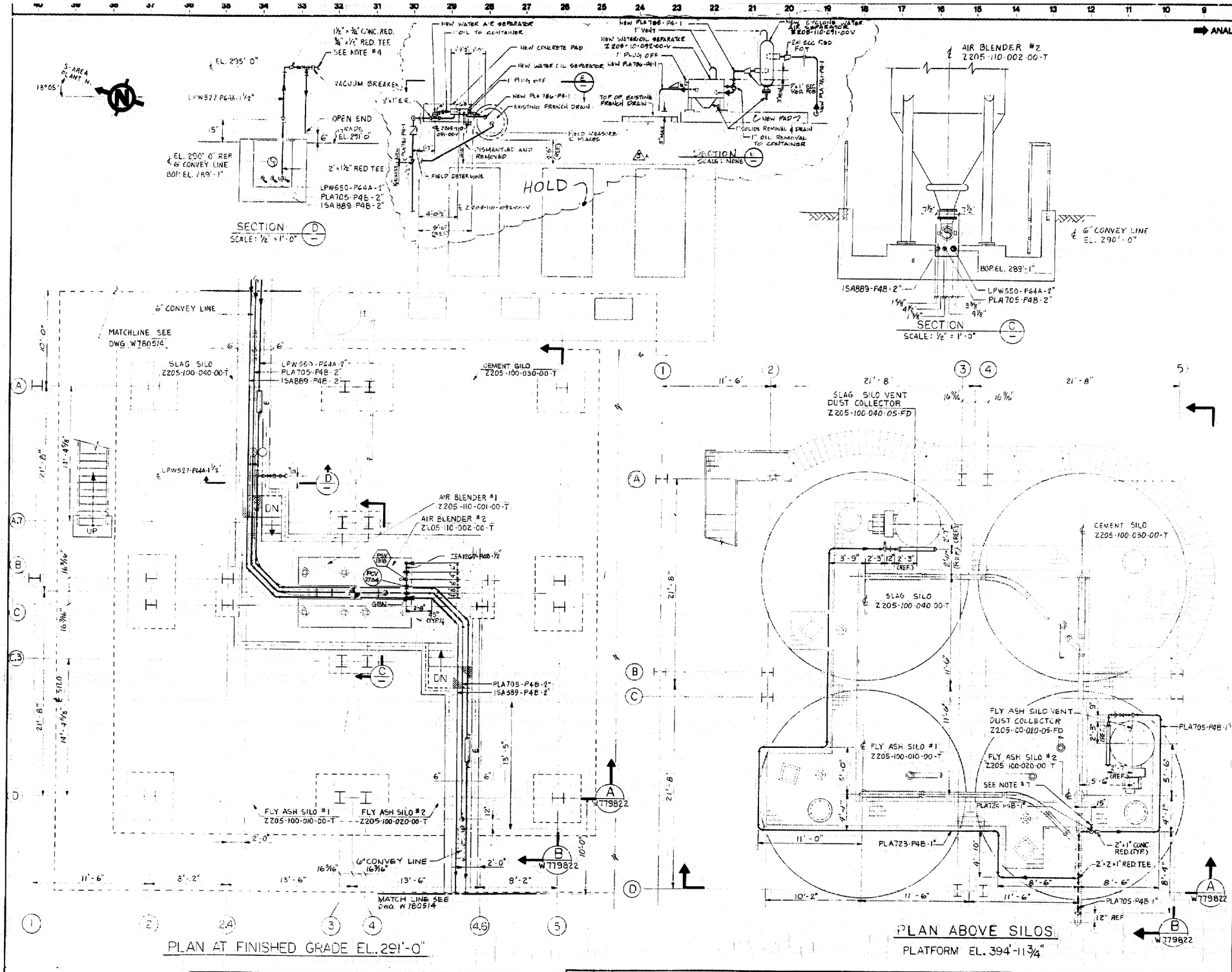

➡ ANALYZE FOR SAFETY, ECOLOGY, AND MINIMUM ESSENTIAL DESIGN ⬅

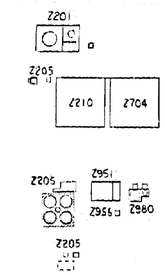

KEY PLAN

GENERAL NOTE:

1. ALL PIPES UNDER PLATFORM AND TRENCH ARE SHOWN IN SOLID LINES FOR CLARITY.
2. THE 6" CONVEY LINE IS PROVIDED IN VENDOR'S MATERIAL REQUISITION PACKAGE MH-21144.
3. THE ELEVATION ARE WITH REFERENCE TO FINISH GRADE ELEVATION OF 0'-0" (REF. EL. 291'-0").
4. HOSE COUPLING SHALL BE IN ACCORDANCE WITH SPEC. P-25.
5. PIPING SHOWN ON DRAWING WILL BE IDENTIFIED AS FOLLOWS:
   FSW254-F53A-6
   SYSTEM OR COMMODITY CODE — SEQUENCE NUMBER — PIPE MATERIAL SPECIFICATION — NOMINAL PIPE SIZE (IN.)
6. FURNISH AND INSTALL REQUIRED PIPING AND VALVES PER SPEC. P-11.
7. FOR CONTINUATION SEE INSTR. LOCATION DIAGRAM DWG. W768599, W768600, W768601, W768602, W768603 & W768604.

W 779821 — LAST 5 REV.

THIS DCN

BECHTEL NATIONAL INC.
SAN FRANCISCO
JOB NO. 13230

THIS DOCUMENT CONTAINS INFORMATION RELATING TO ACTIVITIES OF THE U.S. DEPARTMENT OF ENERGY. NOT TO BE REPRODUCED OR RELEASED WITHOUT PRIOR APPROVAL.

M/F	BLDG.	PROJ.	DA.	TYPE		LAST
		S1780	Z205	23	W779821	5 REV.

SAVANNAH RIVER PLANT-200Z AREA
DEFENSE WASTE PROCESSING FACILITY-SALTSTONE
BULK MATERIAL HANDLING AREA-Z205-PLAN
PIPING LAYOUT
PROCESS — PLANT DESIGN

PROJ.	NO.	REVISION	DFT	ENG	CHK	SPV	PE	DUP	DATE
S1780	4	ADDED VACUUM BREAKER PER WAP DS-281 & DCP-2257							
S1780	6	SLAG WAS CEMENT. CEMENT WAS FLY ASH PER IDM-C373 5							
		WAP DS-279							
S1780		CONNECT A NEW LINE ISA1267-P4B-½ 1" IN LINE ISA889-P4B-2 INSTRUMENT							
		AIR HEADER PER DCF 5372 AND ADDED PSV-1318, PCV-2734, GBN PER DCF 5372.							
S1780		REVISED PER DCN 4A 5*							

PROJ.	NO.	REVISION	DFT	ENG	CHK	SPV	PE	DUP	DATE
S1780		ISSUED FOR FINAL CONSTRUCTION (FCR)							
S1780		REVISED & REISSUED FOR FINAL CONSTRUCTION (FCR)							6-18-84
S1780		INCORP. DCN-1A PER IDM PD 1602							6-30-86
		REVISED & REISSUED FOR FCR							11-22-88
S1780		REVISED AND REISSUED FOR DCF 5372							10-13-89
S1780		REVISED & REISSUED FOR FCR PER (DCF-6787) (DCF-4881)							3-8-91
		UNDER HOLD-NOT IMPLEMENTED							

STANDARDS

REFERENCE DRAWINGS		
W 775921	W 754529	W779822
W 775925	W 754622	M-ML-Z-00010
W 754520	W 754643	IC-CLC-Z-00082
W 754522	W 780514	
W 754524		

THIS DRAWING HAS BEEN FURNISHED BY E. I. DU PONT DE NEMOURS & CO. THE INFORMATION AND KNOW-HOW THEREON MAY NOT BE USED NOR THE DRAWING REPRODUCED WITHOUT THE WRITTEN PERMISSION OF DU PONT. ALL REPRODUCTIONS IN WHOLE OR IN PART, INCLUDING VENDOR'S SHOP DRAWINGS, SHALL BEAR OR REFER TO THIS STAMP.

PROJECT	S1780	
SCALE	1/4" = 1'-0" U.N.O.	DATE
DRAWN	Y.G.	11/25/8
CHECKED		
APPROVED I.C.R.	NOT REQUIRED	
APPROVED FINAL	NOT REQUIRED	

DRC-3
E. I. DU PONT DE NEMOURS & CO., INC.
WILMINGTON, DELAWARE
ENGINEERING DEPARTMENT

W 779821 (SH. 1 of 4)

PROJ.	REV. NO.	DATE	REVISION	PRPD	CHKD	DEM	MPE

UNITED STATES DEPARTMENT OF ENERGY
SAVANNAH RIVER SITE
SRPD DRAWING NO.

AFTER

Design Change Notice (DCN)
Continuation Page

DCP No.	Revision	Document No.	Revision	Page
M-DCP-Z-11003	1	W779821	5	4 of 9
DCN No.	Revision	Project/Task No.		
M-DCP-Z-11003-P-00006	1	N/A		

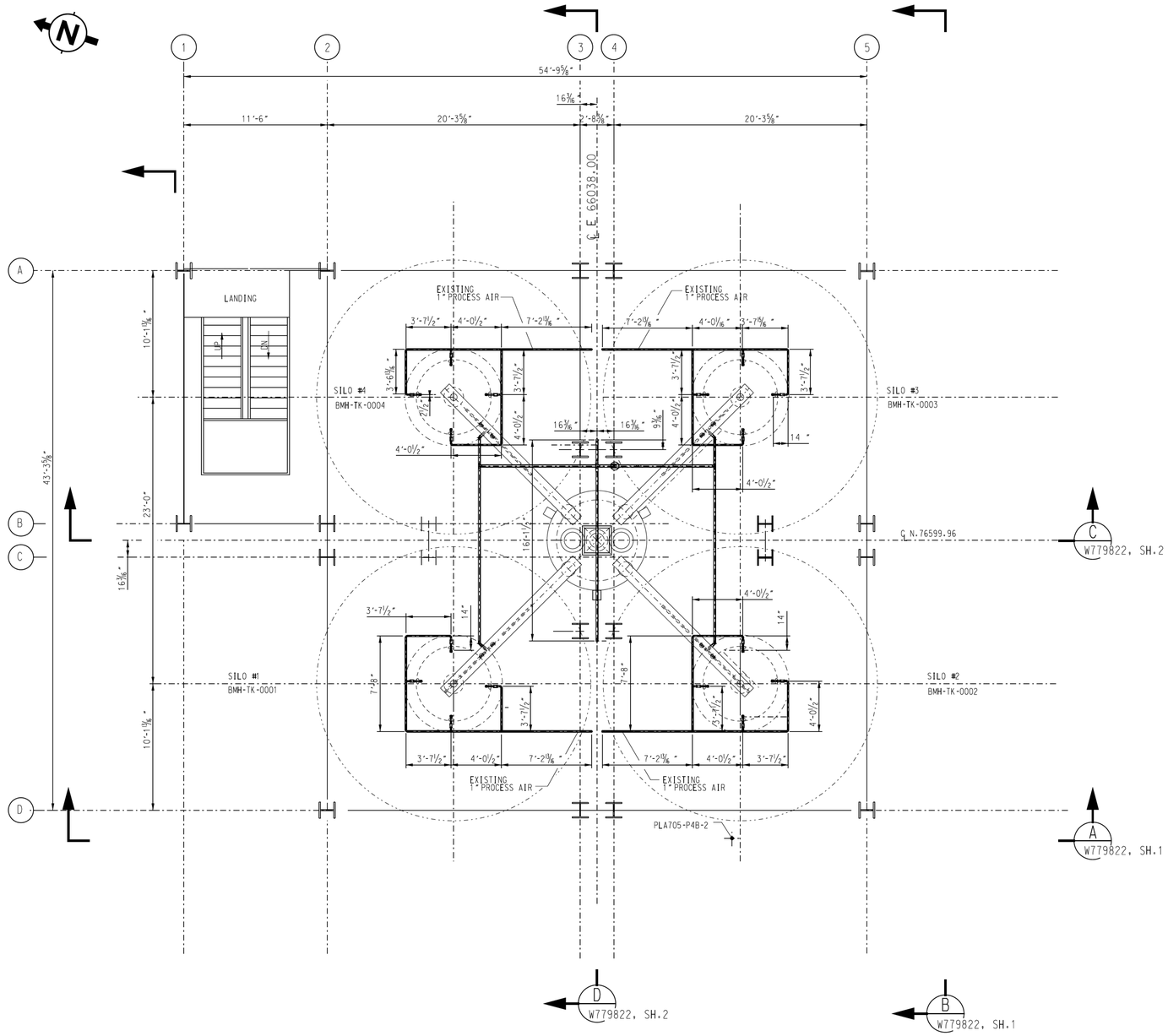

THIS DCN

THIS DCN

PIPING PLAN

T.O.G.ELEV. 335'-1½"
T.O.G.ELEV. 319'-6"

0 1 2 4 8 12
¼" = 1'-0"

UNITED STATES DEPARTMENT OF ENERGY
SAVANNAH RIVER SITE

THIS DRAWING WAS BEEN FURNISHED BY THE SAVANNAH RIVER SITE. THE INFORMATION AND KNOW HOW THEREON MAY NOT BE USED NOR THE DRAWING REPRODUCED WITHOUT WRITTEN PERMISSION OF THE PRIME CONTRACTOR. ALL REPRODUCTIONS IN WHOLE OR IN PART, INCLUDING VENDOR'S SHOP DRAWINGS, SHALL BEAR OR REFER TO THIS STAMP.

TITLE
SAVANNAH RIVER PLANT-200Z AREA
DWPF FACILITY-SALTSTONE
BULK MAT'L HANDLING AREA Z205
PLAN - PIPING LAYOUT
PROCESS PLANT DESIGN

SRP DRAWING NO. W779821
SHEET NO. 2 OF 4
DRAWING REV. 5

AS FOUND
FIELD CONDITIONS

Design Change Notice (DCN)
Continuation Page

DCP No. M-DCP-Z-11003	Revision 1	Document No. W779821	Revision 5
DCN No. M-DCP-Z-11003-P-00006	Revision 1	Project/Task No. N/A	Page 5 of 9

SRP DRAWING NO. N/A

LEVELS 1234567890123456789012345678901234567890123456789012345678901234567890123 PSC= PLOT DATE DRAWN BY: ORIGI: TIME LAST CADD REV. BY: DATE: Scale shown on this drawing is applicable when plotted at 30"x42" (actual drawing size)

AS FOUND
DO NOT
INCORPORATE

THIS DCN

NOTES:

1. PIPING, FITTINGS AND COMPONENTS PER P-CODE DWPF-P-004. THE DESIGN OF PIPING SHALL BE IN ACCORDANCE WITH ENGINEERING REPORT NUMBER T-ESR-S-00010. LATEST REVISION.
2. FUNCTIONAL CLASSIFICATION OF PIPING IS CLASSIFIED "PS" (PRODUCTION SUPPORT).
3. ALL PIPING WORK SHALL BE IN ACCORDANCE WITH SRS ENGINEERING STANDARD MANUAL WSRC-TM-95-1/15060, ENGINEERING GUIDES MANUAL WSRC-IM-95-1-58/15060-G.
4. FIELD TO VERIFY ALL DIMENSIONS BEFORE FABRICATION.
5. FIELD TO RELOCATE AND MODIFY EXISTING INSTRUMENT AIR HEADERS AS REQUIRED TO INSTALL KNIFE GATE VALVES. GASKET/O-RING BY VENDOR. BOLTING PER DWPF-P-004.
6. FOR 12" KNIFE GATE VALVE ACTUATOR SUPPORT DETAILS SEE DWG. C-CP-Z-00029.
7. SUPPORT ALL PROCESS AND INSTRUMENT AIR PIPING IN ACCORDANCE WITH C-CH-G-00004. LATEST REVISION.

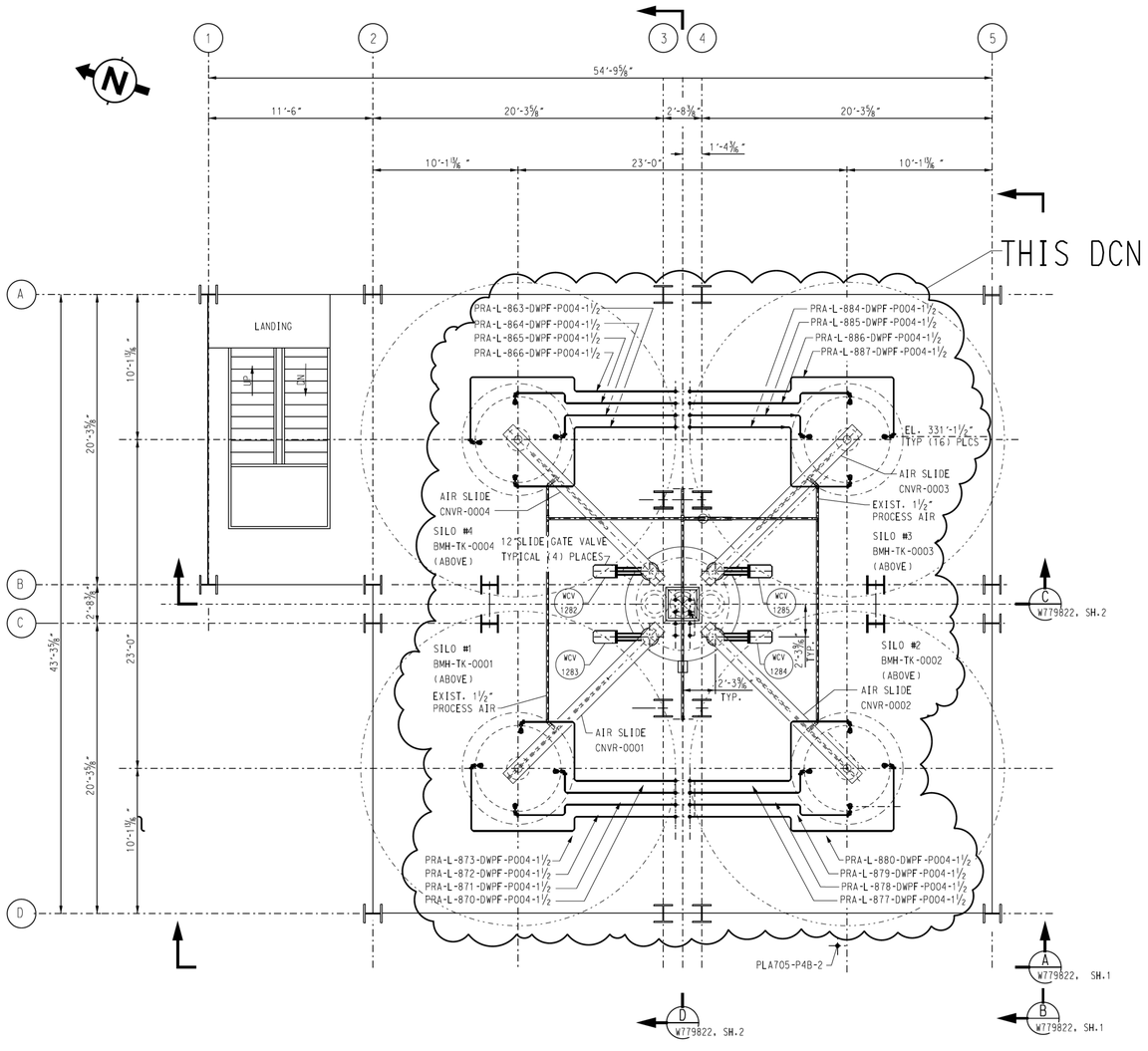

PIPING PLAN
T.O.G.ELEV. 335'-1½"
T.O.G.ELEV. 319'-6"

THIS DCN

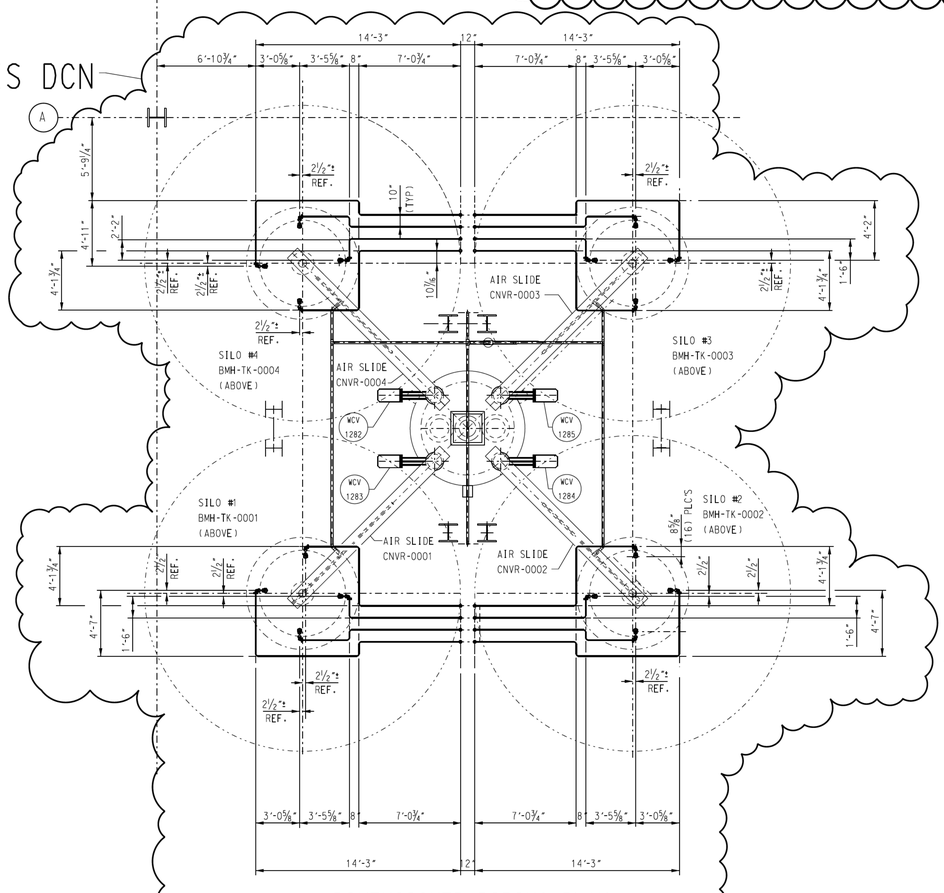

DIMENSIONED PIPING PLAN
T.O.G.ELEV. 335'-1½"
T.O.G.ELEV. 319'-6"

0 1 2 4 8 12
¼" = 1'-0"

UNITED STATES DEPARTMENT OF ENERGY
SAVANNAH RIVER SITE

THIS DRAWING HAS BEEN FURNISHED BY THE SAVANNAH RIVER SITE. THE INFORMATION AND KNOW HOW THEREON MAY NOT BE USED NOR THE DRAWING REPRODUCED WITHOUT WRITTEN PERMISSION OF THE PRIME CONTRACTOR. ALL REPRODUCTIONS IN WHOLE OR IN PART, INCLUDING VENDOR'S SHOP DRAWINGS, SHALL BEAR OR REFER TO THIS STAMP.

TITLE
SAVANNAH RIVER PLANT-200Z AREA
DWPF FACILITY-SALTSTONE
BULK MATL HANDLING AREA Z205
PLAN - PIPING LAYOUT
PROCESS PLANT DESIGN

THIS DCN

SRP DRAWING NO. W779821
SHEET NO. 2 OF 4
DRAWING REV. 5

AFTER

Design Change Notice (DCN)
Continuation Page

DCP No. M-DCP-Z-11003	Revision 1	Document No. W779821	Revision 5
DCN No. M-DCP-Z-11003-P-00006	Revision 1	Project/Task No. N/A	Page 6 of 9

SRP DRAWING NO. N/A

LAST CADD REV. BY: T.KELL DATE: 5-9-12

Scale shown on this drawing is only applicable when plotted at 22"x42" (actual drawing size)

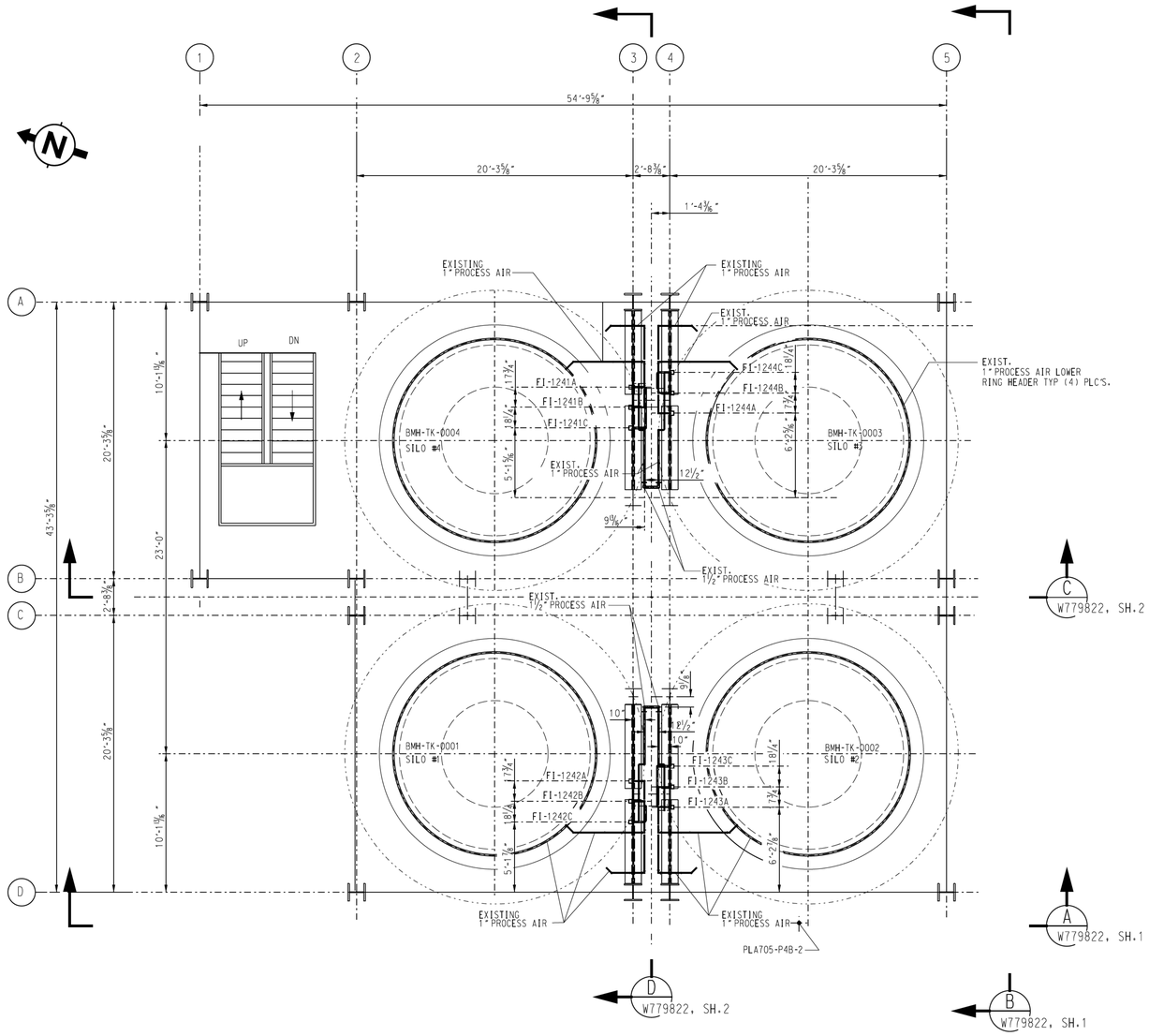

THIS DCN

PIPING PLAN
T.O.G.ELEV.349'-1¼"
T.O.G.ELEV.335'-1½"

0 1 2 4 8 12
¼" - 1'-0"

THIS DCN

UNITED STATES DEPARTMENT OF ENERGY

SAVANNAH RIVER SITE

THIS DRAWING WAS BEEN FURNISHED BY THE SAVANNAH RIVER SITE. THE INFORMATION AND KNOW HOW THEREON MAY NOT BE USED NOR THE DRAWING REPRODUCED WITHOUT WRITTEN PERMISSION OF THE PRIME CONTRACTOR. ALL REPRODUCTIONS IN WHOLE OR IN PART, INCLUDING VENDOR'S SHOP DRAWINGS, SHALL BEAR OR REFER TO THIS STAMP.

TITLE
SAVANNAH RIVER PLANT-200Z AREA
DWPF FACILITY-SALTSTONE
BULK MAT'L HANDLING AREA Z205
PLAN - PIPING LAYOUT
PROCESS PLANT DESIGN

SHP DRAWING NO. W779821 | SHEET NO. 3 OF 4 | DRAWING REV. 5

AS FOUND
FIELD CONDITIONS

Design Change Notice (DCN)
Continuation Page

DCP No. M-DCP-Z-11003	Revision 1	Document No. W779821	Revision 5
DCN No. M-DCP-Z-11003-P-00006	Revision 1	Project/Task No. N/A	Page 7 of 9

SHP DRAWING NO. N/A

REF FILES: ES NO

LEVELS: 1234567890123456789012345678901234567890123456789012345678901234567890123456789012345678901234 5666

PSC: PLOT DATE: TIME:

DRAWN BY (ORIG): DATE:

LAST CADD REV. BY:

Scale shown on this drawing is correct only when plotted at 24"x42" (ANSI D) or 22"x34" (ANSI C) drawing size

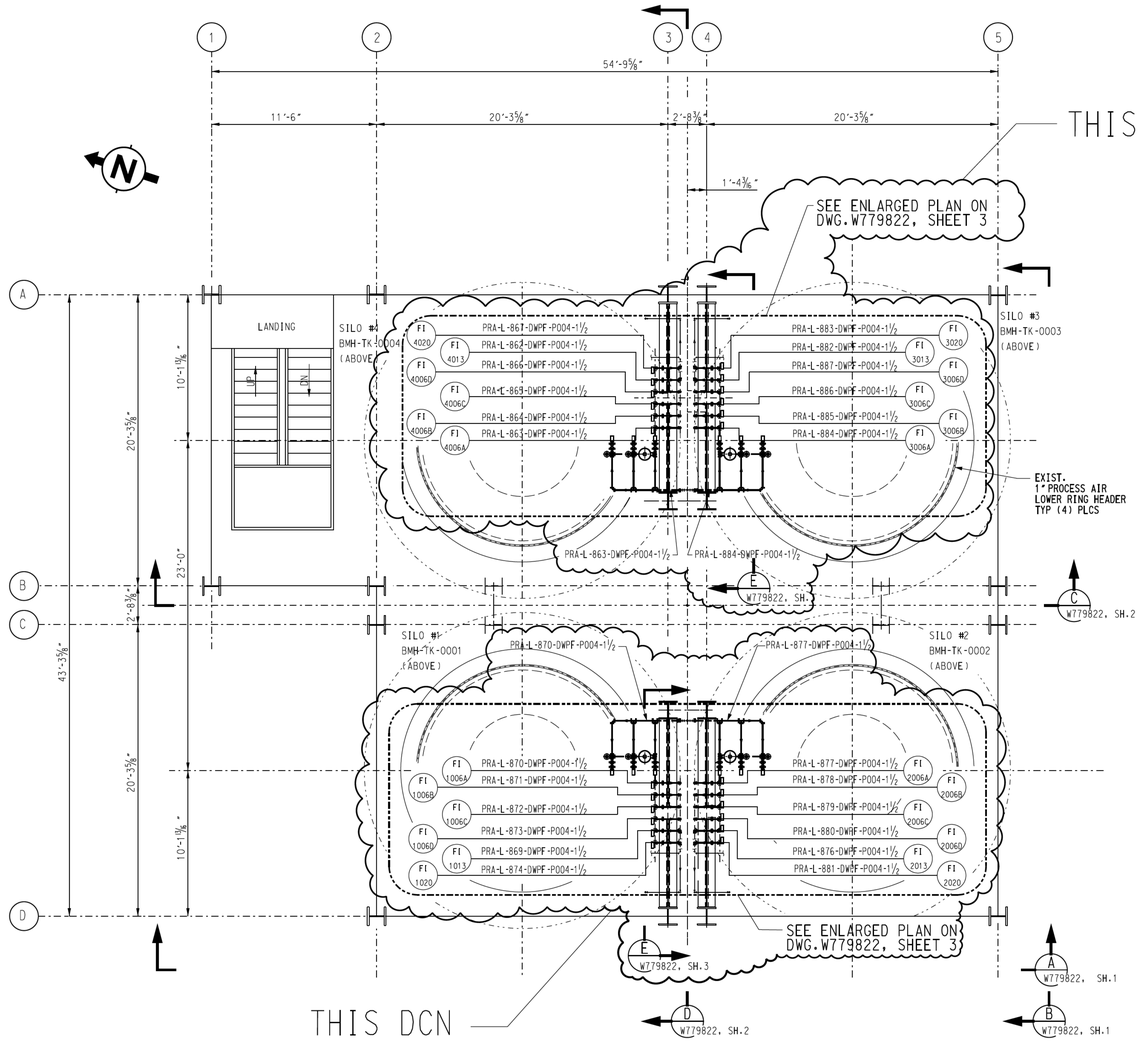

AS FOUND
DO NOT
INCORPORATE

0 1 2 4 8 12
¼" = 1'-0"

PIPING PLAN

T.O.G.ELEV.349'-1¼"
T.O.G.ELEV.335'-1½"

UNITED STATES DEPARTMENT OF ENERGY

SAVANNAH RIVER SITE

THIS DRAWING HAS BEEN FURNISHED BY THE SAVANNAH RIVER SITE. THE INFORMATION AND KNOW HOW THEREON MAY NOT BE USED NOR THE DRAWING REPRODUCED WITHOUT WRITTEN PERMISSION OF THE PRIME CONTRACTOR. ALL REPRODUCTIONS IN WHOLE OR IN PART, INCLUDING VENDOR'S SHOP DRAWINGS, SHALL BEAR OR REFER TO THIS STAMP.

TITLE
SAVANNAH RIVER PLANT-200Z AREA
DWPF FACILITY-SALTSTONE
BULK MAT'L HANDLING AREA Z205
PLAN - PIPING LAYOUT
PROCESS PLANT DESIGN

SRP DRAWING NO. W779821
SHEET NO. 3 OF 4
DRAWING REV. 5

THIS DCN

AFTER

Design Change Notice (DCN)
Continuation Page

DCP No. M-DCP-Z-11003	Revision 1	Document No. W779821	Revision 5
DCN No. M-DCP-Z-11003-P-00006	Revision 1	Project/Task No. N/A	Page 8 of 9

SRP DRAWING NO. N/A

REF FILES NO LEVELS PSC+ PLOT DATE DRAWN BY (ORIG): TIME LAST CADD REV BY: T.KELL DATE: 01/06/11 Scale shown on this drawing is only applicable when plotted at 22"x42" (original drawing size)

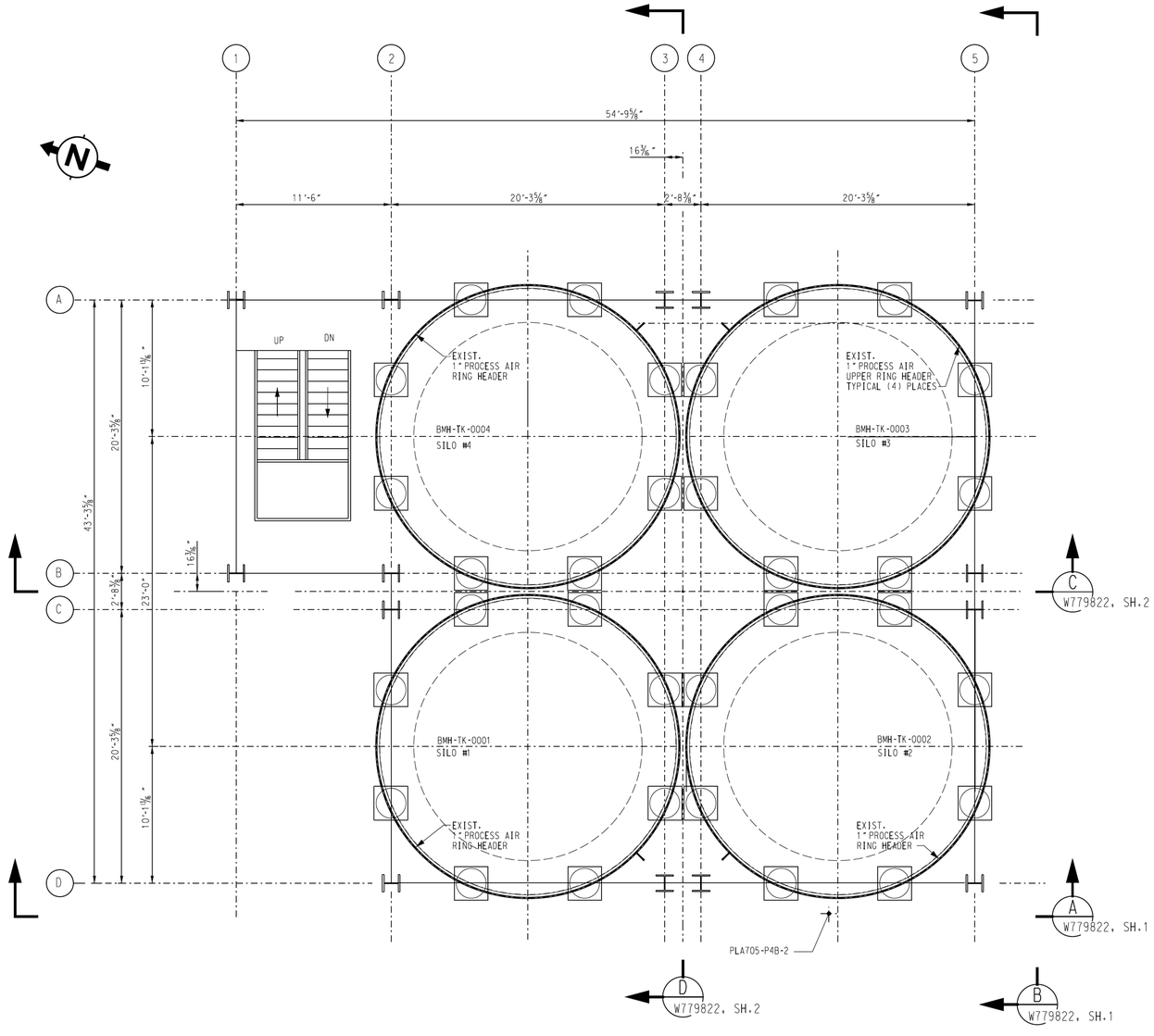

PIPING PLAN

T.O.C.ELEV.349'-1¼"

THIS DCN

THIS DCN

0 1 2 4 8 12

¼" = 1'-0"

UNITED STATES DEPARTMENT OF ENERGY

SAVANNAH RIVER SITE

THIS DRAWING HAS BEEN FURNISHED BY THE SAVANNAH RIVER SITE. THE INFORMATION AND KNOW HOW THEREIN MAY NOT BE USED NOR THE DRAWING REPRODUCED WITHOUT WRITTEN PERMISSION OF THE PRIME CONTRACTOR. NO REPRODUCTIONS IN WHOLE OR IN PART, INCLUDING VENDOR'S SHOP DRAWINGS, SHALL BEAR OR REFER TO THIS STAMP.

TITLE

SAVANNAH RIVER PLANT-200Z AREA
DWPF FACILITY-SALTSTONE
BULK MAT'L HANDLING AREA Z205
PLAN - PIPING LAYOUT
PROCESS PLANT DESIGN

SHP DRAWING NO.	SHEET NO.	DRAWING REV.
W779821	4 OF 4	5

AS FOUND
FIELD CONDITIONS

Design Change Notice (DCN)
Continuation Page

DCP No.	DCN No.	Revision	Document No.	Revision	Page
M-DCP-Z-11003	M-DCP-Z-11003-P-00006	1	W779821	5	9 of 9

Project/Task No. N/A

SHP DRAWING NO. N/A

REPRODUCIBLES YES NO

LEVELS 1234567890123456789012345678901234567890123456789012345678901234567890123 PSC+ PLOT DATE

DRAWN BY (ORIG): TIME

LAST CADD REV. BY: DATE:

Scale shown on this drawing is applicable when plotted at 36"x42" (original drawing size)

Design Change Notice (DCN)

DCP Number	Revision	
M-DCP-Z-11003	1	
DCN No.	**Revision**	**Project/Task No**
M-DCP-Z-11003-M-00001	1	N/A

Design Change Notice (DCN)

Classification Reviewer: N/A

Date: 05/22/2019

Design Change Notice (DCN)

DCP Number	Revision	
M-DCP-Z-11003	1	
DCN No. M-DCP-Z-11003-M-00001	**Revision** 1	**Project/Task No** N/A

Document No. (Doc Rev)
W754522;30

Reason for Change (Be specific)

Air pressure reducing and control station was built with highly restriced air lines and does not provide sufficient air to fluidize the materials in the silos. when the silos are filled above 30% capacity, materials become compacted, form arches and can not be released from the silos without banging on the sides of the silos.

Description of Change

Per the Jenike & Johanson report attached to this DCP, increased capacity pressure reduction and control stations are added to the two aeration rings and the aeration pad at he bottom of each silo. Changes are:

1) split drawing into 4 sheets,
2) Add a PRA pressure reducing station for the aerationpad system, 2A) pressure reducing station consists of (in order) FCV,PI, PCV, PI, PCV, PI and a FI and shutoff valve to each exisitng aeration injection port on the aeration cone
3) add a PRA pressure reducing station for the middle aeration ring, 3A) pressure reducing station consists of (in order) FCV,PI, PCV, PI, PCV, PI and a FI and shutoff valve to the aeration ring
4) add a PRA pressure reducing station for the upper aera ion ring with the same instrumentationas item 3 above
5) Provide note on the number of nozzle for each injection ring
6) Add equipment number for each aeration pad with PO information
7) Add notes for RVD and nozzle injector ports
8) Deleted notes 12 and 14 and section of 8 since they are no longer valid.

Engineering Approvals

Originator	Date	Responsible Engineer Manager	Date
STASIE, GARY A.	05/20/2019	SCHILLING, CHRISTOPHER A.	05/22/2019

Verifier/Checker	Date	Discipline
WEBB, OREN F.	05/21/2019	M-MECHANICAL

Verification Method(s)

Design Check (GS/PS only)

ANALYZE FOR SAFETY, ECOLOGY, AND MINIMUM ESSENTIAL DESIGN

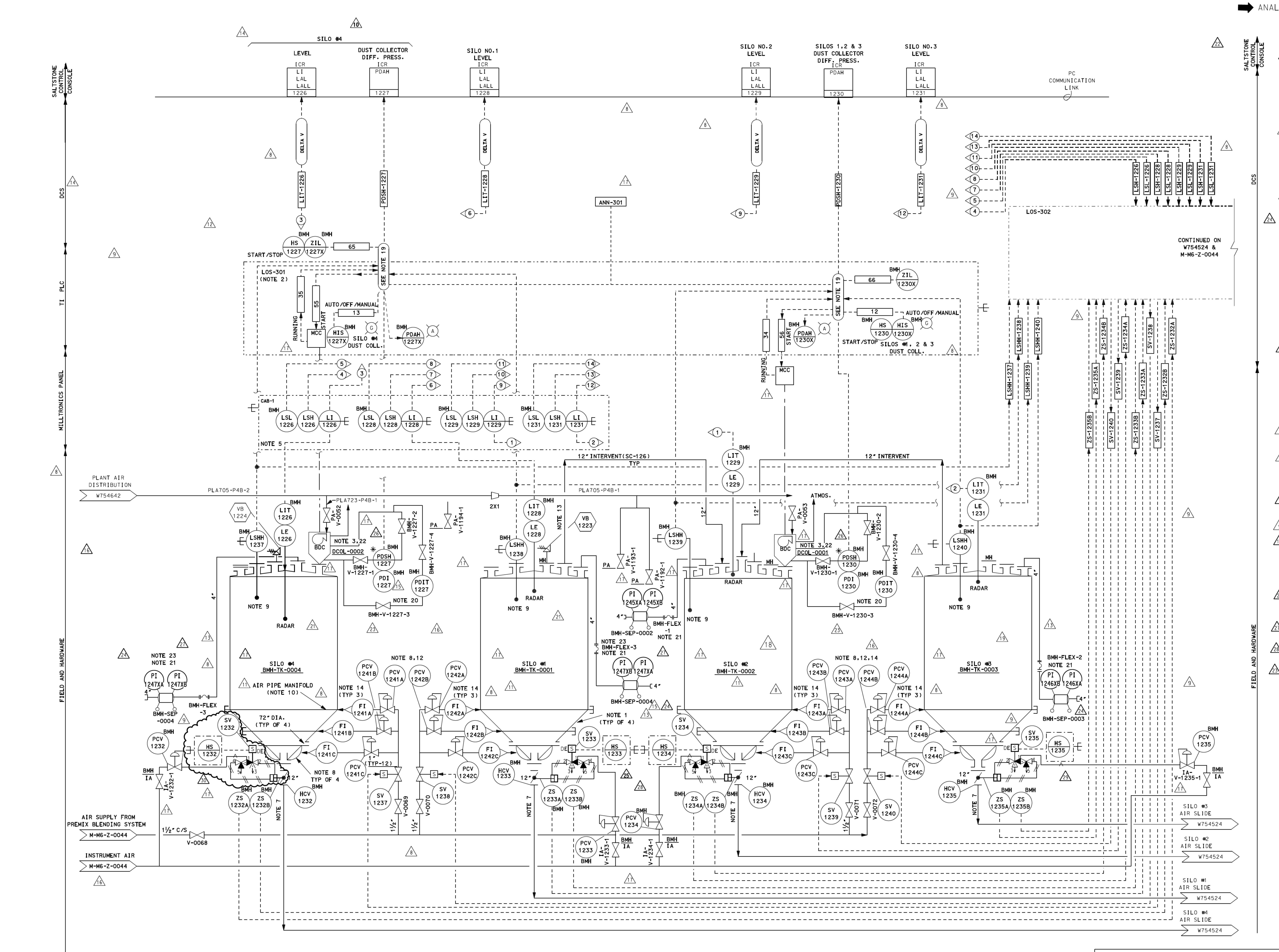

EQUIPMENT IDENTIFICATION

EQUIPMENT NUMBER	EQUIPMENT NAME	REFERENCE DRAWING	EQUIPMENT DESIGN PARAMETERS
Z-205000-BMH-TK-00001	SILO #1	MT-21218-2(1) BPF 218583	560 TON CAP. 22'DIA X 58'H C/S
Z-205000-BMH-TK-0002	SILO #2	BPF 218583	560 TON CAP. 22'DIA X 58'H C/S
Z-205000-BMH-DCOL-0001	SILOS #1, 2 & 3 VENT DUST COLLECTOR	MH-21144-44(1) BPF 218576	470 SQ.FT. CLOTH 1410 CFM 10 HP
Z-205000-BMH-TK-0003	SILO #3	BPF 218583	560 TON CAP. 22'DIA X 58'H C/S
Z-205000-BMH-TK-0004	SILO #4	MT-21218-2(1) BPF 218583	1000 TON CAP. 22'DIA X 58'H C/S
Z-205000-BMH-DCOL-0002	SILO #4 VENT DUST COLLECTOR	MH-21144-45(1) BPF 218576	470 SQ.FT. CLOTH 1410 CFM 10 HP
Z-205000-UNLD-LOS-0301	LOCAL OPERATING STATION LOS-301	MH-21144-10(1) BPF 218576	W4'xH3'xD1'
Z-205000-BMH-CAB-1	SILO LEVEL REMOTE INDICATOR CABINET	AC47575A-001	W16" x H18" x D10"
Z-205000-BMH-SEP-0002	SILO #2 MAGNETIC SEPARATOR	R-R1-Z-00008 PO# 0000064001	CERAMIC MAGNET 4" DIAMETER 50 PSIG
Z-205000-BMH-SEP-0003	SILO #3 MAGNETIC SEPARATOR	R-R1-Z-00008 PO# 0000064001	RARE EARTH MAGNET 4" DIAMETER 50 PSIG
Z-205000-BMH-SEP-0004	SILO #4 MAGNETIC SEPARATOR	R-R1-Z-00008 PO# 0000064001	RARE EARTH MAGNET 4" DIAMETER 50 PSIG

NOTES

1. SILO DISCHARGE HOPPER SECTIONS ARE TYPE 304 STAINLESS STEEL.
2. VENDOR SUPPLIED WALL MOUNTED PANEL IS LOCATED IN THE UNLOADING OFFICE. PANEL IS PART OF MR MH-21144.
3. SPECIFIC PARTS FOR THE DUST COLLECTORS AND THE 6" PIPING ARE PROVIDED IN VENDOR'S MATERIAL REQUISTION PACKAGE MH-21144.
4. DELETED
5. LEVEL INDICATORS ARE IN WALL-MOUNTED CAB-1 LOCATED IN UNLOADING OFFICE. LEVEL SYSTEM SHALL BE FIELD PURCHASED PER J-JD-Z-00033.
6. DELETED
7. THESE LINES ARE FOR DRAWING CONTINUATION REFERENCE ONLY AND DO NOT REPRESENT PIPING.
8. SILO DISCHARGE AIR HOPPERS AND VALVES ARE PROVIDED IN VENDOR'S MATERIAL REQUISITION PACKAGE MH-21142. PRESSURE REGULATIORS AND ROTAMETERS ARE SUPPLIED BY BUYER.
9. LEVEL SWITCHES ARE VIBRATION TYPE LEVEL SWITCHES. SWITCHES ARE FIELD PURCHASED PER J-JD-Z-00035.
10. TWO ¾" AIR PIPE MANIFOLDS AND INSIDE AIR SHELVES FOR EACH SILO ARE PROVIDED IN SUBCONTRACT 126.
11. DELETED.
12. PIPING LESS THAN 2" (EXCEPT PRA) SHALL BE SUPPLIED AND ROUTED BY SC 122. SOLENOID AND MANUAL VALVES ARE PROVIDED IN MR MH-21142.
13. VACUUM IS SET AT 2.25 INWC AND PRESSURE IS SET AT 1.5 OZ/SQ. IN.
14. VALVE ON ROTAMETER AND PRESSURE GAUGE UPSTREAM ARE NUMBERED THE SAME AS CORRESPONDING FI AND PCV- BUT NOT SHOWN ON THIS DRAWINGS. (TYP 12 PLACES). DOWN STREAM OF PCV'S 1241C, 1242C, 1243C, 1244C ARE 4 MANUAL VALVES NUMBERED PRA-(XXXX)-1-4 WHERE XXXX=(PCV LOOP #1).
15. ALL COMPONENT NUMBERS PREFIXED BY Z-205000-PRA-, UNLESS OTHERWISE NOTED FOR BUILDING NUMBER OR SYSTEM.
16. DELETED
17. ALL PIPING NOT OTHERWISE SPECIFIED SHALL BE P-4, EXCEPT CONVEY PIPING WHICH SHALL BE SCH 80 WITH VICTAULIC COUPLINGS & WEARBACKS WHERE APPLICABLE.
18. DELETED
19. CONTACT PROCESS COMPUTER GROUP FOR PLC INFORMATION.
20. THE DISPLAY PANEL FOR PDIT-1227 AND PDIT-1230, THE WIRELESS RECEIVER, AND THE UPS ARE LOCATED IN 205-8Z.
21. REMOVABLE MAGNETIC SEPARATOR AND ENGINEERING APPROVED HOSE MAY BE USED WHEN TRANSFERRING MATERIALS FROM TRUCK TO SILO. WHEN NOT IN USE, THE PIPE, MAGNETIC SEPARATOR AND HOSE CONNECTIONS SHALL BE CAPPED TO PREVENT FOREIGN MATERIALS FROM ENTERING THE DRY MATERIAL SYSTEM. SEE M-CLC-Z-00122 FOR HOSE UNLISTED COMPONENT EVALUATION.
22. DUST COLLECTORS FAN BLOWERS' MANUFACTURER IS NEW YORK BLOWER COMPANY. MODEL NUMBER NYB SIZE 174 GENERAL INDUSTRIAL SERIES 20, FAN ARRANGEMENT # 10 (BELT DRIVE), LS WHEEL, 10 H.P. OR ENGINEERING APPROVED EQUAL.
23. REMOVABLE MAGNETIC SEPARATOR AND ENGINEERING APPROVED HOSE BMH-SEP-0004 AND BMH-FLEX-3 CAN BE USED INTERCHANGEABLY BETWEEN SILO #1 AND SILO #4 PER SW24.5 SECTION 7.2.
24. DETAILED DRAWINGS FOR THE MAGNETIC SEPARATORS STELLITE PROTECTIVE SCREENS CAN BE FOUND IN R-R4-Z-00004.

PROGRAMMABLE CONTROLLER

INPUT: 1 - 5 V OR 4 - 20 mA	INPUT: MILLIVOLT	INPUT: PULSE	INPUT: DIGITAL 120 VAC	OUTPUT: 1 - 5 V OR 4 - 20 mA	OUTPUT: DIGITAL 120 VAC
4	0	0	2	0	0

	NUMBERS ALLOTTED	LAST NUMBER USED	NUMBERS CANCELLED
INSTRUMENT LOOP NUMBERS	1226-1247 1226X-1247X	1247 1247X	NONE

BECHTEL NATIONAL INC.
SAN FRANCISCO
JOB NO. 13239

THIS DOCUMENT CONTAINS INFORMATION RELATING TO ACTIVITIES OF THE U.S. DEPARTMENT OF ENERGY. NOT TO BE REPRODUCED OR RELEASED WITHOUT PRIOR APPROVAL.

M/F	BLDG.	PROJ.	DA	TYPE		LAST
		S1780	Z205	21/71	W 754522	30 REV.

(U) SAVANNAH RIVER PLANT-200Z AREA
DEFENSE WASTE PROCESSING FACILITY - SALTSTONE
CEMENT AND FLY ASH STORAGE SILOS
PIPING AND INSTRUMENT DIAGRAM
PROCESS/INSTR MECH/CONT SYS

Bechtel is responsible for the original design contained on this drawing, however, changes incorporated on this drawing to reflect As-built conditions have not been verified by Bechtel National, Inc.

PROJ.	REV. NO.	DATE	REVISION	PRP'D	LEAD ENG	CHK'D	APRV'D	APRV'D	APRV'D
N/A	30		INCORPORATED J-DCP-Z-14008 (REF. DCN M-00001).	APPROVALS MAINTAINED IN DCR/EDWS					
N/A	29	01/10/17	INCORPORATED J-DCP-Z-14007 (REF. DCN M-00001).	APPROVALS MAINTAINED IN DCR/EDWS					
N/A	28	10/20/16	INCORPORATED J-DCP-Z-14006 (REF. DCN M-00001) AND M-DCF-Z-00490.	APPROVALS MAINTAINED IN DCR/EDWS					
N/A	27	10/06/15	INCORPORATED M-DCF-Z-00475.	APPROVALS MAINTAINED IN DCR/EDWS					
N/A	26	09/01/15	INCORPORATED M-DCF-Z-00474.	APPROVALS MAINTAINED IN DCR/EDWS					
N/A	25	06/03/15	INCORPORATED J-DCP-Z-14005 (REF DCN M-00001).	APPROVALS MAINTAINED IN DCR/EDWS					
N/A	24	09/11/14	INCORPORATED M-DCF-Z-00436.	APPROVALS MAINTAINED IN DCR/EDWS					
N/A	23	03/07/11	INCORPORATED E-DCF-Z-00250.	APPROVALS MAINTAINED IN DCR/EDWS/MICROFILM					
N/A	22	05/11/10	INCORPORATED J-DCP-Z-07002 (REF DCN J004).	APPROVALS MAINTAINED IN DCR/EDWS/MICROFILM					
N/A	21	03/10/09	INCORPORATED J-DCF-Z-00369	APPROVALS MAINTAINED IN DCR/EDWS/MICROFILM					
N/A	20	1/23/08	ALT. ID CHANGED	APPROVALS MAINTAINED IN DCR/EDWS					
N/A	19	10/17/07	INCORPORATED J-DCF-Z-00310	APPROVALS MAINTAINED IN DCR/EDWS					
N/A	18	6/12/07	INCORPORATED J-DCF-Z-00286	APPROVALS MAINTAINED IN DCR/EDWS					
DWPF	17	7/12/06	INCORPORATED J-DCF-Z-00269, REVISED CLI's	APPROV. SIGNATURES IN AIM					
DWPF	16	10/17/05	INCORP'D M-DCP-Z-05006 (REF. DCN M-006) AND M-DCF-Z-00170	APPROV. SIGNATURES IN AIM					

PROJ.	REV. NO.	DATE	REVISION	PRP'D	LEAD ENG	CHK'D	APRV'D	APRV'D	APRV'D
S-1780	15	07/01/03	INCORP M-DCF-Z- 00155	SIGNATURES ON MICROFILM					
W899	14	03/26/03	ISSUE AS-BUILT	SIGNATURES ON MICROFILM					
N/A	13	09/26/02	INCORPORATED M-DCF-Z-00158 (PE&CD/CM)	SIGNATURES ON MICROFILM					
N/A	12	07/01/02	INCORPORATED M-DCF-Z-00127 (PE&CD/CM)	SIGNATURES ON MICROFILM					
N/A	11	03/19/02	INCORP. G-DCF-Z-00012, M-DCF-Z-00094 & M-DCF-Z-00112, ALSO INCORP. W754522-002 (NO DWG. CHANGE REQUIRED) (PE&CD/CM)	SIGNATURES ON MICROFILM					
S-1780	10	05/07/97	AS-BUILT, INCORP M-DCF-Z-00030 & M-DCF-Z-00049	SIGNATURES ON MICROFILM					
S-1780	9	4/20/95	INCORP J-DCF-Z-00013 & M-DCP-Z-93006-002	SIGNATURES ON MICROFILM					
S-1780	8	6/30/94	INCORP M-DCF-Z-00001	SIGNATURES ON MICROFILM					

M-M6-Z-00108
E & PD DRAWING NO.

UNITED STATES DEPARTMENT OF ENERGY
SAVANNAH RIVER SITE

PROJ NO.		REVISION	DFT ENG CHK SPV PE DuP	DATE
S1780	6	ISSUED FOR POST AS-BUILT	ORIGINAL SIGNED	11OCT88
S1780	7	REVISED & REISSUED FOR PAB		
S1780	3	REISSUED FOR FINAL CONSTRUCTION RELEASE (FC3)	ORIGINAL SIGNED	03NOV86
S1780	4	REVISED AND REISSUED FOR FINAL CONSTRUCTION RELEASE (FCR)	ORIGINAL SIGNED	15JUN87
S1780	5	ISSUED FOR AS-BUILT (INCORPORATES DCN 4-A)	ORIGINAL SIGNED	26MAY88

STANDARDS		REFERENCE DRAWINGS			
	16	W754540	FD		
	25	M-ML-Z-00004			
	14			9	

THIS DRAWING HAS BEEN FURNISHED BY E.I.DU PONT DE NEMOURS & CO. THE INFORMATION AND KNOW-HOW THEREON MAY NOT BE USED NOR THE DRAWING REPRODUCED WITHOUT THE WRITTEN PERMISSION OF DU PONT. ALL REPRODUCTIONS IN WHOLE OR IN PART, INCLUDING VENDOR'S SHOP DRAWINGS, SHALL BEAR OR REFER TO THIS STAMP.

		DATE
PROJECT	S1780	
SCALE	NONE	
DRAWN	HKP	27DEC84
CHECKED		
APPROVED - I.C.R.	G.W.OAKES	28APR86
APPROVED FINAL	P.F. REINHARD	19JUN86

DRC-1
DUPONT
E.I.DU PONT DE NEMOURS & CO., INC.
WILMINGTON, DELAWARE
ENGINEERING DEPARTMENT
W 754522

LAST CADD REV BY: R.A. KING DATE: 03/27/18

Design Change Notice (DCN) Continuation Page

DCP No. M-DCP-Z-11003	Revision 1	Document No. W754522	Revision 30
DCN No. M-DCP-Z-11003-M-00001	Revision 1	Project/Task No. N/A	Page 3 of 11

BEFORE

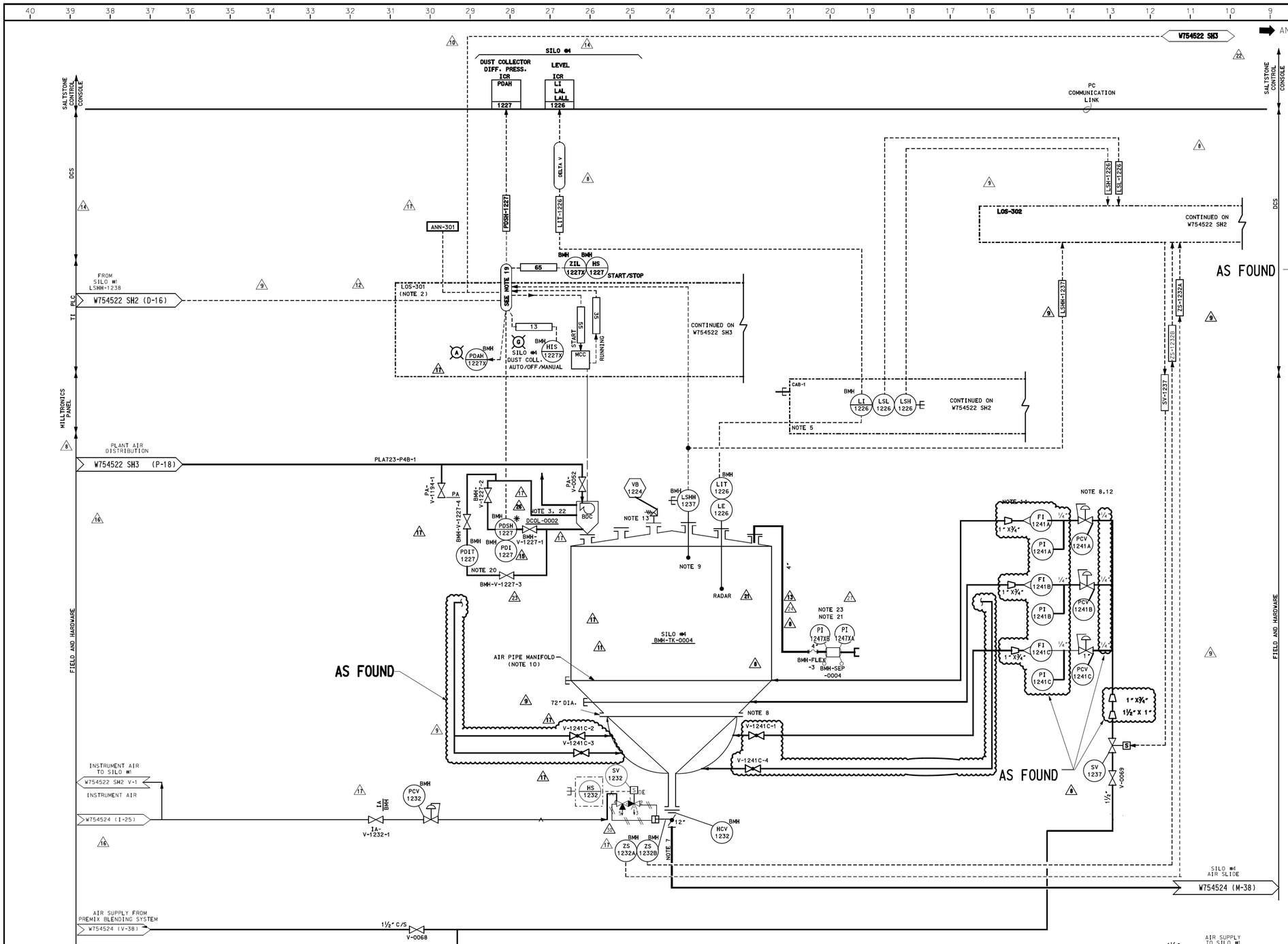

EQUIPMENT IDENTIFICATION

EQUIPMENT NUMBER	EQUIPMENT NAME	REFERENCE DRAWING	EQUIPMENT DESIGN PARAMETERS
Z-205000-BMH-TK-00001	SILO #1	MT-21218-2(1) BPF 218583	560 TON CAP. 22'DIA X 58'H C/S
Z-205000-BMH-TK-0002	SILO #2	BPF 218583	560 TON CAP. 22'DIA X 58'H C/S
Z-205000-BMH-DCOL-0001	SILOS #1, 2 & 3 VENT DUST COLLECTOR	MH-21144-44(1) BPF 218576	470 SQ.FT. CLOTH 1410 CFM 10 HP
Z-205000-BMH-TK-0003	SILO #3	BPF 218583	560 TON CAP. 22'DIA X 58'H C/S
Z-205000-BMH-TK-0004	SILO #4	MT-21218-2(1) BPF 218583	560 TON CAP. 22'DIA X 58'H C/S
Z-205000-BMH-DCOL-0002	SILO #4 VENT DUST COLLECTOR	MH-21144-45(1) BPF 218576	470 SQ.FT. CLOTH 1410 CFM 10 HP
Z-205000-UNLD-LOS-0301	LOCAL OPERATING STATION LOS-301	MH-21144-10(1) BPF 218576	W4"xH3"xD1"
Z-205000-BMH-CAB-1	SILO LEVEL REMOTE INDICATOR CABINET	AC47575A-001	W16" x H18" x D10"
Z-205000-BMH-SEP-0002	SILO #2 MAGNETIC SEPARATOR	R-R1-Z-00008 PO# 0000064001	CERAMIC MAGNET 4" DIAMETER 50 PSIG
Z-205000-BMH-SEP-0003	SILO #3 MAGNETIC SEPARATOR	R-R1-Z-00008 PO# 0000064001	RARE EARTH MAGNET 4" DIAMETER 50 PSIG
Z-205000-BMH-SEP-0004	SILO #4 MAGNETIC SEPARATOR	R-R1-Z-00008 PO# 0000064001	RARE EARTH MAGNET 4" DIAMETER 50 PSIG

NOTES

1. SILO DISCHARGE HOPPER SECTIONS ARE TYPE 304 STAINLESS STEEL.
2. VENDOR SUPPLIED WALL MOUNTED PANEL IS LOCATED IN THE UNLOADING OFFICE. PANEL IS PART OF MR MH-21144.
3. SPECIFIC PARTS FOR THE DUST COLLECTORS AND THE 6" PIPING ARE PROVIDED IN VENDOR'S MATERIAL REQUISTION PACKAGE MH-21144.
4. DELETED
5. LEVEL INDICATORS ARE IN WALL-MOUNTED CAB-1 LOCATED IN UNLOADING OFFICE. LEVEL SYSTEM SHALL BE FIELD PURCHASED PER J-JD-Z-00033.
6. DELETED
7. THESE LINES ARE FOR DRAWING CONTINUATION REFERENCE ONLY AND DO NOT REPRESENT PIPING.
8. SILO DISCHARGE AIR HOPPERS AND VALVES ARE PROVIDED IN VENDOR'S MATERIAL REQUISITION PACKAGE MH-21142. PRESSURE REGULATORS AND ROTAMETERS ARE SUPPLIED BY BUYER.
9. LEVEL SWITCHES ARE VIBRATION TYPE LEVEL SWITCHES. SWITCHES ARE FIELD PURCHASED PER J-JD-Z-00035.
10. TWO 3/4" AIR PIPE MANIFOLDS AND INSIDE AIR SHELVES FOR EACH SILO ARE PROVIDED IN SUBCONTRACT 126.
11. DELETED.
12. PIPING LESS THAN 2" (EXCEPT PRA) SHALL BE SUPPLIED AND ROUTED BY SC 122. SOLENOID AND MANUAL VALVES ARE PROVIDED IN MR MH-21142.
13. VACUUM IS SET AT 2.25 INWC AND PRESSURE IS SET AT 1.5 OZ/SQ. IN.
14. VALVE ON ROTAMETER AND PRESSURE GAUGE UPSTREAM ARE NUMBERED THE SAME AS CORRESPONDING FI AND PCV- BUT NOT SHOWN ON THIS DRAWING. (TYP 12 PLACES). DOWN STREAM OF PCV'S 1241C, 1242C, 1243C, 1244.C ARE 4 MANUAL VALVES NUMBERED PRA-(XXXX)-1-4 WHERE XXXX=(PCV LOOP #).
15. ALL COMPONENT NUMBERS PREFIXED BY Z-205000-PRA-, UNLESS OTHERWISE NOTED FOR BUILDING NUMBER OR SYSTEM.
16. DELETED
17. ALL PIPING NOT OTHERWISE SPECIFIED SHALL BE P-4, EXCEPT CONVEY PIPING WHICH SHALL BE SCH 80 WITH VICTAULIC COUPLINGS & WEARBACKS WHERE APPLICABLE.
18. DELETED
19. CONTACT PROCESS COMPUTER GROUP FOR PLC INFORMATION.
20. THE DISPLAY PANEL FOR PDIT-1227 AND PDIT-1230, THE WIRELESS RECEIVER, AND THE UPS ARE LOCATED IN 205-8Z.
21. REMOVABLE MAGNETIC SEPARATOR AND ENGINEERING APPROVED HOSE MAY BE USED WHEN TRANSFERRING MATERIALS FROM TRUCK TO SILO. WHEN NOT IN USE, THE PIPE, MAGNETIC SEPARATOR AND HOSE CONNECTIONS SHALL BE CAPPED TO PREVENT FOREIGN MATERIALS FROM ENTERING THE DRY MATERIAL SYSTEM. SEE M-CLC-Z-00122 FOR HOSE UNLISTED COMPONENT EVALUATION.
22. DUST COLLECTORS FAN BLOWERS MANUFACTURER IS NEW YORK BLOWER COMPANY. MODEL NUMBER NYB SIZE 174 GENERAL INDUSTRIAL SERIES 20. FAN ARRANGEMENT # 10 (BELT DRIVE). LS WHEEL. 10 H.P. OR ENGINEERING APPROVED EQUAL.
23. REMOVABLE MAGNETIC SEPARATOR AND ENGINEERING APPROVED HOSE BMH-SEP-0004 AND BMH-FLEX-3 CAN BE USED INTERCHANGEABLY BETWEEN SILO #1 AND SILO #4 PER SW24.5 SECTION 7.2.
24. DETAILED DRAWINGS FOR THE MAGNETIC SEPARATORS STELLITE PROTECTIVE SCREENS CAN BE FOUND IN R-R4-Z-00004.

PROGRAMMABLE CONTROLLER

INPUT				OUTPUT	
1 - 5 V OR 4 - 20 mA	MILLIVOLT	PULSE	DIGITAL 120 VAC	1 - 5 V OR 4 - 20 mA	DIGITAL 120 VAC
4	0	0	2	0	0

INSTRUMENT LOOP NUMBERS	NUMBERS ALLOTTED	LAST NUMBER USED	NUMBERS CANCELLED
	1226-1247 1226X - 1247X	1247 1247X	NONE

BECHTEL NATIONAL INC.
SAN FRANCISCO

JOB NO. 13239

THIS DOCUMENT CONTAINS INFORMATION RELATING TO ACTIVITIES OF THE U.S. DEPARTMENT OF ENERGY. NOT TO BE REPRODUCED OR RELEASED WITHOUT PRIOR APPROVAL.

M/F	BLDG.	PROJ.	DA	TYPE	W 754522 SHEET 1 OF 4	LAST 30 REV.
		S1780	Z205	21 71		

(U) SAVANNAH RIVER PLANT-200Z AREA
DEFENSE WASTE PROCESSING FACILITY - SALTSTONE CEMENT AND FLY ASH STORAGE SILOS

PIPING AND INSTRUMENT DIAGRAM

PROCESS/INSTR MECH/CONT SYS

PROJ.	REV. NO.	DATE	REVISION	PRP'D	LEAD ENG	CHK'D	APRV'D	APRV'D	APRV'D
N/A	30		INCORPORATED J-DCP-Z-14008 (REF. DCN M-00001).	APPROVALS MAINTAINED IN DCR/EDWS					
N/A	29	01/10/17	INCORPORATED J-DCP-Z-14007 (REF. DCN M-00001).	APPROVALS MAINTAINED IN DCR/EDWS					
N/A	28	10/20/16	INCORPORATED ~~J-DCP-Z-14006 (REF.~~ DCN M-00001) AND M-DCF-Z-00490.	APPROVALS MAINTAINED IN DCR/EDWS					
N/A	27	10/06/15	INCORPORATED M-DCF-Z-00475.	APPROVALS MAINTAINED IN DCR/EDWS					
N/A	26	09/01/15	INCORPORATED M-DCF-Z-00474.	APPROVALS MAINTAINED IN DCR/EDWS					
N/A	25	06/03/15	INCORPORATED J-DCP-Z-14005 (REF DCN M-00001).	APPROVALS MAINTAINED IN DCR/EDWS					
N/A	24	09/11/14	INCORPORATED M-DCF-Z-00436.	APPROVALS MAINTAINED IN DCR/EDWS	S-1780	15	07/01/03	INCORP. M-DCF-Z- 00155	SIGNATURES ON MICROFILM
N/A	23	03/07/11	INCORPORATED E-DCF-Z-00250.	APPROVALS MAINTAINED IN DCR/EDWS/MICROFILM	W899	14	03/26/03	ISSUE AS-BUILT	SIGNATURES ON MICROFILM
N/A	22	05/11/10	INCORPORATED J-DCP-Z-07002 (REF DCN J004).	APPROVALS MAINTAINED IN DCR/EDWS/MICROFILM	N/A	13	09/26/02	INCORPORATED M-DCF-Z-00158 (PE&CD/CM)	SIGNATURES ON MICROFILM
N/A	21	03/10/09	INCORPORATED J-DCF-Z-00369	APPROVALS MAINTAINED IN DCR/EDWS/MICROFILM	N/A	12	07/01/02	INCORPORATED M-DCF-Z-00127 (PE&CD/CM)	SIGNATURES ON MICROFILM
N/A	20	1/23/08	ALT. ID CHANGED	APPROVALS MAINTAINED IN DCR/EDWS	N/A	11	03/19/02	INCORP. G-DCF-Z-00012, M-DCF-Z-00094 & M-DCF-Z-00112.	SIGNATURES ON MICROFILM
N/A	19	10/17/07	INCORPORATED J-DCF-Z-00310	APPROVALS MAINTAINED IN DCR/EDWS	↓	↓	↓	ALSO INCORP. W754522-002 (NO DWG. CHANGE REQUIRED) (PE&CD/CM)	SIGNATURES ON MICROFILM
N/A	18	6/12/07	INCORPORATED J-DCF-Z-00286	APPROVALS MAINTAINED IN DCR/EDWS	S-1780	10	05/07/97	AS-BUILT, INCORP M-DCF-Z-00030 & M-DCF-Z-00049	SIGNATURES ON MICROFILM
DWPF	17	7/12/06	INCORPORATED J-DCF-Z-00269, REVISED CLI's	APPROV. SIGNATURES IN AIM	S-1780	9	4/20/95	INCORP. J-DCF-Z-00013 & M-DCP-Z-93006-002	SIGNATURES ON MICROFILM
DWPF	16	10/17/05	INCORP'D M-DCP-Z-05006 (REF. DCN M-006) AND M-DCF-Z-00170	APPROV. SIGNATURES IN AIM	S-1780	8	6/30/94	INCORP. M-DCF-Z-00001	SIGNATURES ON MICROFILM

M-M6-Z-00108 DRAWING NO.

UNITED STATES ~~DEPARTMENT~~ OF ENERGY
SAVANNAH RIVER SITE

PROJ.	REV. NO.	DATE	REVISION	PRP'D	LEAD ENG	CHK'D	APRV'D	APRV'D	APRV'D
S1780	6		ISSUED FOR POST AS-BUILT	ORIGINAL SIGNED			110CT88		
S1780	7		REVISED & REISSUED FOR PAB						
S1780	3		REISSUED FOR FINAL CONSTRUCTION RELEASE (FC3)	ORIGINAL SIGNED			03NOV86		
S1780	4		REVISED AND REISSUED FOR FINAL CONSTRUCTION RELEASE (FCR)	ORIGINAL SIGNED			15JUN87		
S1780	5		ISSUED FOR AS-BUILT (INCORPORATES DCN 4-A)	ORIGINAL SIGNED			26MAY88		

M-M6-Z-00108 E & PD DRAWING NO.

UNITED STATES DEPARTMENT OF ENERGY
SAVANNAH RIVER SITE

Bechtel is responsible for the original design contained on this drawing, however, changes incorporated on this drawing to reflect As-built conditions have not been verified by Bechtel National, Inc.

STANDARDS	REFERENCE DRAWINGS
	W754540 FD
	M-ML-Z-00004

THIS DRAWING HAS BEEN FURNISHED BY E.I.DU PONT DE NEMOURS & CO. THE INVENTION AND KNOW-HOW THEREON MAY NOT BE USED NOR THE DRAWING REPRODUCED WITHOUT THE WRITTEN PERMISSION OF DU PONT. ALL REPRODUCTIONS IN WHOLE OR IN PART, INCLUDING VENDOR'S SHOP DRAWINGS, SHALL BEAR OR REFER TO THIS STAMP.

PROJECT	S1780	
SCALE	NONE	DATE
DRAWN	HKP	27DEC84
CHECKED		
APPROVED - I.C.R.	G.W.OAKES	28APR86
APPROVED FINAL	P.F. REINHARD	19JUN86

DRC-1

E.I.DU PONT DE NEMOURS & CO., INC.
WILMINGTON, DELAWARE
ENGINEERING DEPARTMENT
W 754522

LAST CADD REV BY: D.F. WEBB DATE: 05/12/12

Design Change Notice (DCN) Continuation Page

AS FOUND

DCP No.	DCN No.	Document No.	Project/Task No.	Revision	Revision	Page
M-DCP-Z-11003	M-DCP-Z-11003-M-00001	W754522	N/A	1	1	30 4 of 11

SRP DRAWING NO. W754522

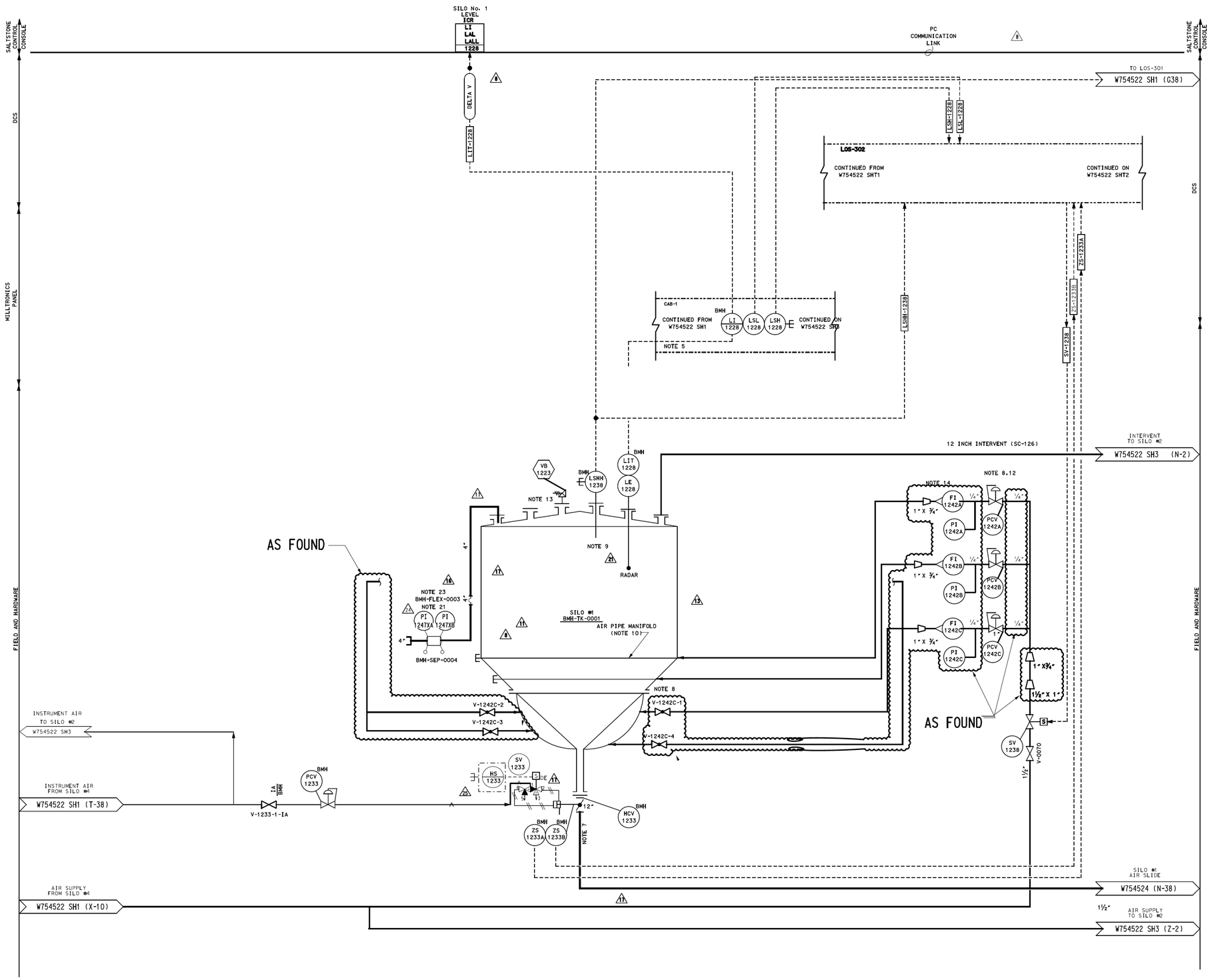

UNITED STATES DEPARTMENT OF ENERGY

SAVANNAH RIVER SITE

THIS DRAWING HAS BEEN FURNISHED BY THE SAVANNAH RIVER SITE. THE INFORMATION AND KNOW HOW THEREON MAY NOT BE USED NOR THE DRAWING REPRODUCED WITHOUT WRITTEN PERMISSION OF THE PRIME CONTRACTOR. ALL REPRODUCTIONS IN WHOLE OR IN PART, INCLUDING VENDOR'S SHOP DRAWINGS, SHALL BEAR OR REFER TO THIS STAMP.

TITLE

(U) SAVANNAH RIVER PLANT-200Z AREA
DWPF-SALTSTONE
CEMENT AND FLY ASH STORAGE SILOS
PIPING AND INSTRUMENT DIAGRAM
PROCESS/INSTR MECH/CONT SYS

M	M6	Z	00108
SRP DRAWING NO.	SHEET NO.	DRAWING REV.	
W754522	2 OF 4	30	

AS FOUND

Design Change Notice (DCN)
Continuation Page

DCP No. M-DCP-Z-11003	Revision 1	Document No. W754522	Revision 30
DCN No. M-DCP-Z-11003-M-00001	Revision 1	Project/Task No. N/A	Page 5 of 11

SRP DRAWING NO. W754522

SALTSTONE CONTROL CONSOLE

DCS

TI PLC

MILLTRONICS PANEL

FIELD AND HARDWARE

SILO No. 1, 2 & 3 DUST COLLECTOR DIFF. PRESS. ICR PDAH 1230

SILO No. 2 LEVEL ICR LI LAL LALL 1229

PC COMMUNICATION LINK

DELTA V

LIT-1229

PDSH-1230

ANN-301
W754522 SH1 (A-10)

SILO #3 LSHH-1240
W754522 SH4 (D-18)

SEE NOTE 19

66 BMH ZIL 1230X

12 BMH HIS 1230X BMH HS 1230X

START 56 34 RUNNING

MCC

SILOS #1 2 & 3 DUST COLL. AUTO/OFF/MANUAL START/STOP

BMH PDAH 1230X

CONTINUED FROM W754522 SH1

LOS-301 (NOTE 2)

LOS-302

CONTINUED FROM W754522 SH2

CONTINUED ON W754522 SH4

LSHH-1229 LSL-1229

LSHH-1239

ZS-1234A

ZS-1234B

SV-1239

CAB-1

CONTINUED FROM W754522 SH2

BMH LI 1229 LSL 1229 LSH 1229

CONTINUED ON W754522 SH4

NOTE 5

INTERVENT FROM SILO #1
W754522 SH2 (N-16)

12 INCH INTERVENT (SC-126)

INTERVENT FROM SIO #3
W754522 SH4 (N17)

12 INCH INTERVENT

PLANT AIR DISTRIBUTION
W754642 SH1 (Q-15)

PLA705-P4B-2"

2" X 1"

PA-V-1193-1 PA PA-V-1192-1 PA

AS FOUND

PLA723-P4B-1"

SILO #4 DUST COLLECTION
W754522 SH1 (L-38)

ATMOS.

PA-V-0053

BOC

NOTE 3, 22

DCOL-0001

BMH-V-1230-2

BMH-V-1230-4

BMH PDSH 1230

BMH-V-1230-1

BMH PDIT 1230 BMH PDI 1230

NOTE 20

BMH-V-1230-3

BMH LSHH 1239 BMH LIT 1229 LE 1229

NOTE 9

RADAR

4"

SILO #2 BMH-TK-0002

AIR PIPE MANIFOLD (NOTE 10)

NOTE 14

NOTE 8,12

FI 1243A PI 1243A PCV 1243A

FI 1243B PI 1243B PCV 1243B

FI 1243C PI 1243C PCV 1243C

1" X 3/4"

1/4"

NOTE 21

PI 1245XB PI 1245XA

BMH-FLEX -0001

BMH-SEP -0002

1 1/2" X 1"

SV 1239

V-0071

1 1/2"

INSTRUMENT AIR TO SILO #3
W754522 SH4 (V-2)

V-1243C-2

V-1243C-3

NOTE 8

V-1243C-1

V-1243C-4

INSTRUMENT AIR FROM SILO #1
W754522 SH2 (T-1)

IA BMH

IA-V-1234-1

BMH PCV 1234

SV 1234

HS 1234

SIDE

12"

NOTE 7

BMH HCV 1234

BMH ZS 1234A BMH ZS 1234B

AS FOUND

AIR SUPPLY FROM SILO #1
W754522 SH2(Y-16)

SILO #2 AIR SLIDE
W754524

AIR SUPPLY TO SILO #3
W754522 SH4

1 1/2"

UNITED STATES DEPARTMENT OF ENERGY

SAVANNAH RIVER SITE

THIS DRAWING HAS BEEN FURNISHED BY THE SAVANNAH RIVER SITE. THE INFORMATION AND KNOW HOW THEREON MAY NOT BE USED NOR THE DRAWING REPRODUCED WITHOUT WRITTEN PERMISSION OF THE PRIME CONTRACTOR. ALL REPRODUCTIONS IN WHOLE OR IN PART, INCLUDING VENDOR'S SHOP DRAWINGS, SHALL BEAR OR REFER TO THIS STAMP.

TITLE
(U) SAVANNAH RIVER PLANT-200Z AREA
DWPF-SALTSTONE
CEMENT AND FLY ASH STORAGE SILOS
PIPING AND INSTRUMENT DIAGRAM
PROCESS/INSTR MECH/CONT SYS

M M6 Z 00108

SRP DRAWING NO.	SHEET NO.	DRAWING REV.
W754522	3 OF 4	30

AS FOUND

Design Change Notice (DCN)
Continuation Page

DCP No.	M-DCP-Z-11003	Revision	1	Document No.	W754522	Revision	30
DCN No.	M-DCP-Z-11003-M-00001	Revision	1	Project/Task No.	N/A	Page	6 of 11

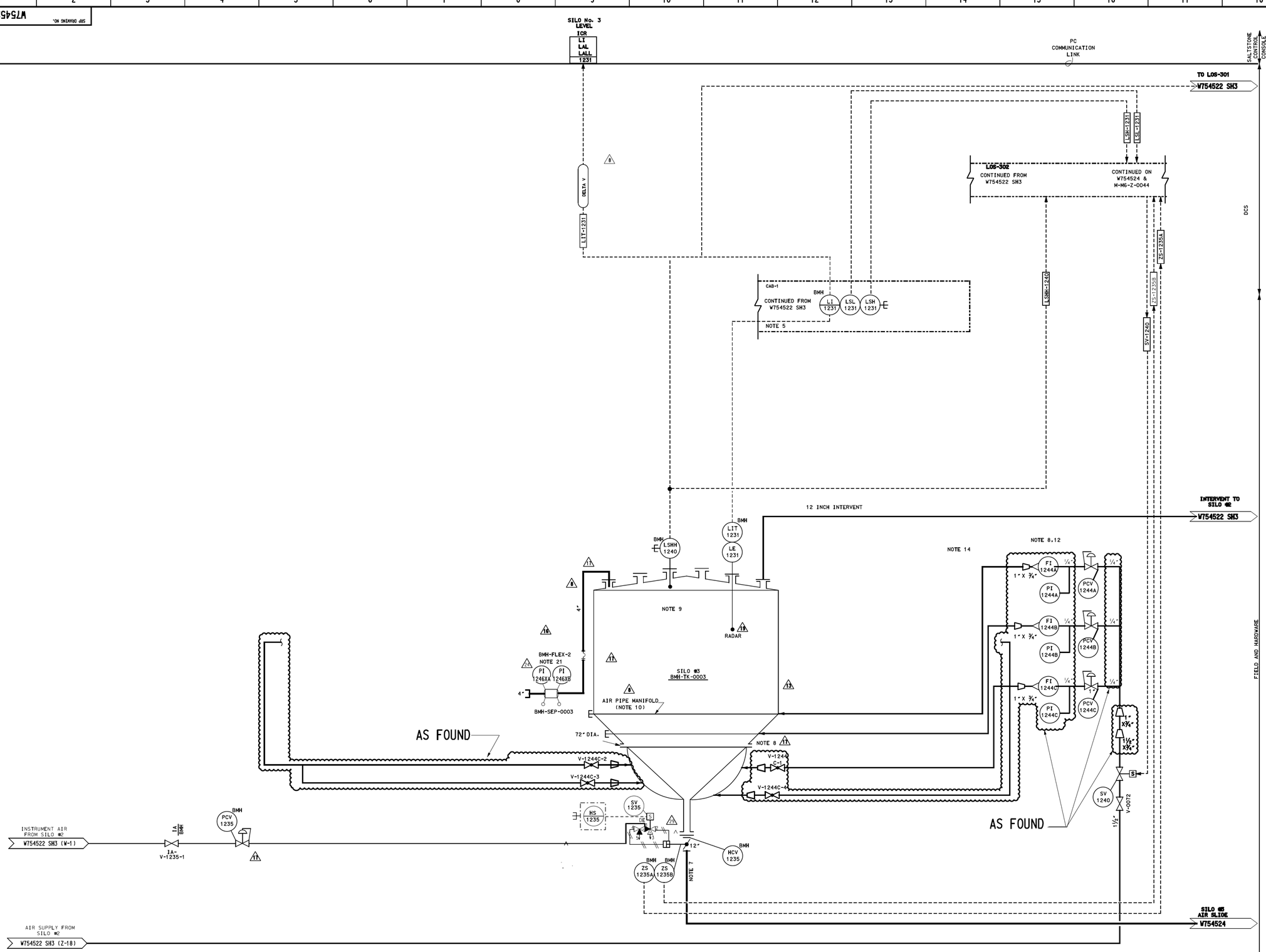

UNITED STATES DEPARTMENT OF ENERGY

SAVANNAH RIVER SITE

THIS DRAWING HAS BEEN FURNISHED BY THE SAVANNAH RIVER SITE. THE INFORMATION AND KNOW HOW THEREON MAY NOT BE USED NOR THE DRAWING REPRODUCED WITHOUT WRITTEN PERMISSION OF THE PRIME CONTRACTOR. ALL REPRODUCTIONS IN WHOLE OR IN PART, INCLUDING VENDOR'S SHOP DRAWINGS, SHALL BEAR OR REFER ON THIS STAMP.

TITLE

(U) SAVANNAH RIVER PLANT-200Z AREA
DWPF-SALTSTONE
CEMENT AND FLY ASH STORAGE SILOS
PIPING AND INSTRUMENT DIAGRAM
PROCESS/INSTR MECH/CONT SYS

M M6 Z 00108

SRP DRAWING NO.	SHEET NO.	DRAWING REV.
W754522	4 OF 4	30

Design Change Notice (DCN)
Continuation Page

AS FOUND

DCP No. M-DCP-Z-11003	Revision 1	Document No. W754522	Revision 30
DCN No. M-DCP-Z-11003-M-00001	Revision 1	Project/Task No. N/A	Page 7 of 11

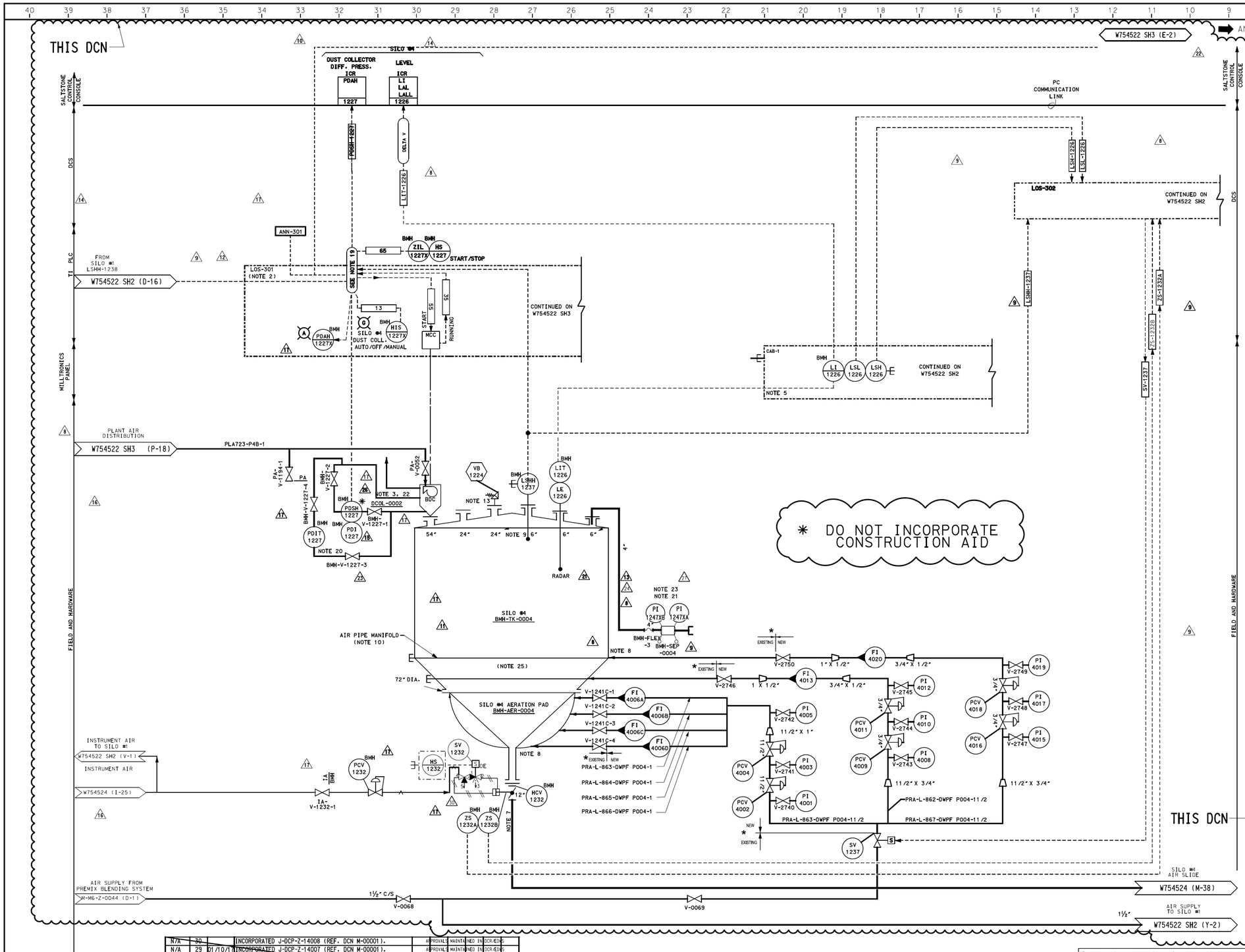

EQUIPMENT IDENTIFICATION

EQUIPMENT NUMBER	EQUIPMENT NAME	REFERENCE DRAWING	EQUIPMENT DESIGN PARAMETERS
Z-205000-BMH-TK-00001	SILO #1	MT-21218-2(1) BPF 218583	560 TON CAP. 22'DIA X 58'H C/S
Z-205000-BMH-TK-0002	SILO #2	BPF 218583	560 TON CAP. 22'DIA X 58'H C/S
Z-205000-BMH-DCOL-0001	SILOS #1, 2 & 3 VENT DUST COLLECTOR	MH-21144-44(1) BPF 218576	470 SQ.FT. CLOTH 1410 CFM 10 HP
Z-205000-BMH-TK-0003	SILO #3	BPF 218583	560 TON CAP. 22'DIA X 58'H C/S
Z-205000-BMH-TK-0004	SILO #4	MT-21218-2(1) BPF 218583	560 TON CAP. 22'DIA X 58'H C/S
Z-205000-BMH-DCOL-0002	SILO #4 VENT DUST COLLECTOR	MH-21144-45(1) BPF 218576	470 SQ.FT. CLOTH 1410 CFM 10 HP
Z-205000-UNLD-LOS-0301	LOCAL OPERATING STATION LOS-301	MH-21144-10(1) BPF 218576	W4'xH3'xD1'
Z-205000-BMH-CAB-1	SILO LEVEL REMOTE INDICATOR CABINET	AC47575A-001	W16" x H18" x D10"
Z-205000-BMH-SEP-0002	SILO #2 MAGNETIC SEPARATOR	R-R1-Z-00008 PO# 0000064001	CERAMIC MAGNET 4" DIAMETER 50 PSIG
Z-205000-BMH-SEP-0003	SILO #3 MAGNETIC SEPARATOR	R-R1-Z-00008 PO# 0000064001	RARE EARTH MAGNET 4" DIAMETER 50 PSIG
Z-205000-BMH-SEP-0004	SILO #4 MAGNETIC SEPARATOR	R-R1-Z-00008 PO# 0000064001	RARE EARTH MAGNET 4" DIAMETER 50 PSIG
Z-205000-BMH-AER-0001	SILO #1 AERATION PAD	MH-21442-86(1)	6" INLET X 12" OUTLET
Z-205000-BMH-AER-0002	SILO #2 AERATION PAD	MH-21442-86(1)	6" INLET X 12" OUTLET
Z-205000-BMH-AER-0003	SILO #3 AERATION PAD	MH-21442-86(1)	6" INLET X 12" OUTLET
Z-205000-BMH-AER-0004	SILO #4 AERATION PAD	MH-21442-86(1)	6" INLET X 12" OUTLET

NOTES THIS DCN

1. SILO DISCHARGE HOPPER SECTIONS ARE TYPE 304 STAINLESS STEEL.
2. VENDOR SUPPLIED WALL MOUNTED PANEL IS LOCATED IN THE UNLOADING OFFICE. PANEL IS PART OF MR MH-21144.
3. SPECIFIC PARTS FOR THE DUST COLLECTORS AND THE 6" PIPING ARE PROVIDED IN VENDOR'S MATERIAL REQUISITION PACKAGE MH-21144.
4. DELETED
5. LEVEL INDICATORS ARE IN WALL-MOUNTED CAB-1 LOCATED IN UNLOADING OFFICE. LEVEL SYSTEM SHALL BE FIELD PURCHASED PER J-JD-Z-00033.
6. DELETED
7. THESE LINES ARE FOR DRAWING CONTINUATION REFERENCE ONLY AND DO NOT REPRESENT PIPING.
8. SILO DISCHARGE AIR HOPPERS AND VALVES ARE PROVIDED IN VENDOR'S MATERIAL REQUISITION PACKAGE MH-21142.
9. LEVEL SWITCHES ARE VIBRATION TYPE LEVEL SWITCHES. SWITCHES ARE FIELD PURCHASED PER J-JD-Z-00035.
10. TWO 3/4" AIR PIPE MANIFOLDS AND INSIDE AIR SHELVES FOR EACH SILO ARE PROVIDED IN SUBCONTRACT 126.
11. DELETED.
12. DELETED. THIS DCN
13. VACUUM IS SET AT 2.25 INWC AND PRESSURE IS SET AT 1.5 OZ/SQ. IN.
14. DELETED.

NOTES CONTINUED ON SHEET 2

PROGRAMMABLE CONTROLLER

INPUT				OUTPUT	
1 - 5 V OR 4 - 20 mA	MILLIVOLT	PULSE	DIGITAL 120 VAC	1 - 5 V OR 4 - 20 mA	DIGITAL 120 VAC
4	0	0	2	0	0

THIS DCN

INSTRUMENT LOOP NUMBERS	NUMBERS ALLOTTED	LAST NUMBER USED	NUMBERS CANCELLED
	1226-1247	1247	13239
	1226X - 1247X	1247X	
SILO # 1	1000-1999	1009	NONE
SILO # 2	2000-2999	2009	NONE
SILO # 3	3000-3999	3009	NONE
SILO # 4	4000-4999	4009	NONE

BECHTEL NATIONAL INC.
SAN FRANCISCO

JOB NO. 13239

THIS DOCUMENT CONTAINS INFORMATION RELATING TO ACTIVITIES OF THE U.S. DEPARTMENT OF ENERGY. NOT TO BE REPRODUCED OR RELEASED WITHOUT PRIOR APPROVAL.

THIS DCN

M/F	BLDG.	PROJ.	DA	TYPE	W754522	LAST
		S1780	Z205	21/71	SHEET 1 OF 4	30 REV.

(U) SAVANNAH RIVER PLANT-200Z AREA
DEFENSE WASTE PROCESSING FACILITY - SALTSTONE
CEMENT AND FLY ASH STORAGE SILOS
PIPING AND INSTRUMENT DIAGRAM

PROCESS/INSTR MECH/CONT SYS

Bechtel is responsible for the original design contained on this drawing, however, changes incorporated on this drawing to reflect As-built conditions have not been verified by Bechtel National, Inc.

PROJ	NO.	REVISION	DFT	ENG	CHK	SPV	PE	DUP	DATE
S1780	6	ISSUED FOR POST AS-BUILT	ORIGINAL SIGNED						11OCT88
S1780	7	REVISED & REISSUED FOR PAB							
S1780	3	REISSUED FOR FINAL CONSTRUCTION	ORIGINAL SIGNED						03NOV86
		RELEASE (FC3)							
S1780	4	REVISED AND REISSUED FOR FINAL	ORIGINAL SIGNED						15JUN87
		CONSTRUCTION RELEASE (FCR)							
S1780	5	ISSUED FOR AS-BUILT	ORIGINAL SIGNED						26MAY88
		(INCORPORATES DCN 4-A)							

STANDARDS: 19 W754540; 20 M-ML-Z-00004; 14; 9

REFERENCE DRAWINGS: FD

THIS DRAWING HAS BEEN FURNISHED BY E.I.DU PONT DE NEMOURS & CO. THE INFORMATION AND KNOW-HOW THEREON MAY NOT BE USED NOR THE DRAWING REPRODUCED WITHOUT THE WRITTEN PERMISSION OF DU PONT. ALL REPRODUCTIONS IN WHOLE OR IN PART, INCLUDING VENDOR'S SHOP DRAWINGS, SHALL BEAR OR REFER TO THIS STAMP.

PROJECT	S1780
SCALE	NONE
DATE	
DRAWN	HKP 27DEC84
CHECKED	
APPROVED - I.C.R.	G.W.OAKES 28APR86
APPROVED FINAL	P.F. REINHARD 19JUN86

DRC-1

E.I.DU PONT DE NEMOURS & CO., INC.
WILMINGTON, DELAWARE
ENGINEERING DEPARTMENT
W 754522

PROJ.	REV. NO.	DATE	REVISION	PRP'D	LEAD ENG	CHK'D	APRV'D	APRV'D	APRV'D
N/A	30		INCORPORATED J-DCP-Z-14008 (REF. DCN M-00001).	APPROVALS MAINTAINED IN DCR/EDWS					
N/A	29	01/10/17	INCORPORATED J-DCP-Z-14007 (REF. DCN M-00001).	APPROVALS MAINTAINED IN DCR/EDWS					
N/A	28	10/20/16	INCORPORATED J-DCP-Z-14006 (REF. DCN M-00001) AND M-DCF-Z-00490.	APPROVALS MAINTAINED IN DCR/EDWS					
N/A	27	10/06/15	INCORPORATED M-DCF-Z-00475.	APPROVALS MAINTAINED IN DCR/EDWS					
N/A	26	09/01/15	INCORPORATED M-DCF-Z-00474.	APPROVALS MAINTAINED IN DCR/EDWS					
N/A	25	06/03/15	INCORPORATED J-DCP-Z-14005 (REF DCN M-00001).	APPROVALS MAINTAINED IN DCR/EDWS					
N/A	24	09/11/14	INCORPORATED M-DCF-Z-00436.	APPROVALS MAINTAINED IN DCR/EDWS					
N/A	23	03/07/11	INCORPORATED E-DCF-Z-00250.	APPROVALS MAINTAINED IN DCR/EDWS/MICROFILM					
N/A	22	05/11/10	INCORPORATED J-DCP-Z-07002 (REF DCN J004).	APPROVALS MAINTAINED IN DCR/EDWS/MICROFILM					
N/A	21	03/10/09	INCORPORATED J-DCF-Z-00369	APPROVALS MAINTAINED IN DCR/EDWS/MICROFILM					
N/A	20	1/23/08	ALT. ID CHANGED	APPROVALS MAINTAINED IN DCR/EDWS					
N/A	19	10/17/07	INCORPORATED J-DCF-Z-00310	APPROVALS MAINTAINED IN DCR/EDWS					
N/A	18	6/12/07	INCORPORATED J-DCF-Z-00286	APPROVALS MAINTAINED IN DCR/EDWS					
DWPF	17	7/12/06	INCORPORATED J-DCF-Z-00269, REVISED CLI's	APPROV. SIGNATURES IN AIM					
DWPF	16	10/17/05	INCORP'D M-DCP-Z-05006 (REF. DCN M-006) AND M-DCF-Z-00170	APPROV. SIGNATURES IN AIM					

PROJ.	REV. NO.	DATE	REVISION	PRP'D	LEAD ENG	CHK'D	APRV'D	APRV'D	APRV'D
S-1780	15	07/01/03	INCORP M-DCF-Z- 00155	SIGNATURES ON MICROFILM					
W899	14	03/26/03	ISSUE AS-BUILT	SIGNATURES ON MICROFILM					
N/A	13	09/26/02	INCORPORATED M-DCF-Z-00158 (PE&CD/CM)	SIGNATURES ON MICROFILM					
N/A	12	07/01/02	INCORPORATED M-DCF-Z-00127 (PE&CD/CM)	SIGNATURES ON MICROFILM					
N/A	11	03/19/02	INCORP. G-DCF-Z-00012, M-DCF-Z-00094 & M-DCF-Z-00112. ALSO INCORP. W754522-002 (NO DWG. CHANGE REQUIRED) (PE&CD/CM)	SIGNATURES ON MICROFILM					
S-1780	10	05/07/99	AS-BUILT. INCORP M-DCF-Z-00030 & M-DCF-Z-00049	SIGNATURES ON MICROFILM					
S-1780	9	4/20/95	INCORP J-DCF-Z-00013 & M-DCP-Z-93006-002	SIGNATURES ON MICROFILM					
S-1780	8	6/30/94	INCORP M-DCF-Z-00001	SIGNATURES ON MICROFILM					

M-M6-Z-00108 DRAWING NO.

UNITED STATES DEPARTMENT OF ENERGY
SAVANNAH RIVER SITE

M-M6-Z-00108 E & PD DRAWING NO.

UNITED STATES DEPARTMENT OF ENERGY
SAVANNAH RIVER SITE

Design Change Notice (DCN) Continuation Page

Revision	30
Page	8 of 11
Document No.	W754522
Project/Task No.	N/A
Revision	1
Revision	1
DCP No.	M-DCP-Z-11003
DCN No.	M-DCP-Z-11003-M-00001

AFTER

SRP DRAWING NO. W754522

THIS DCN

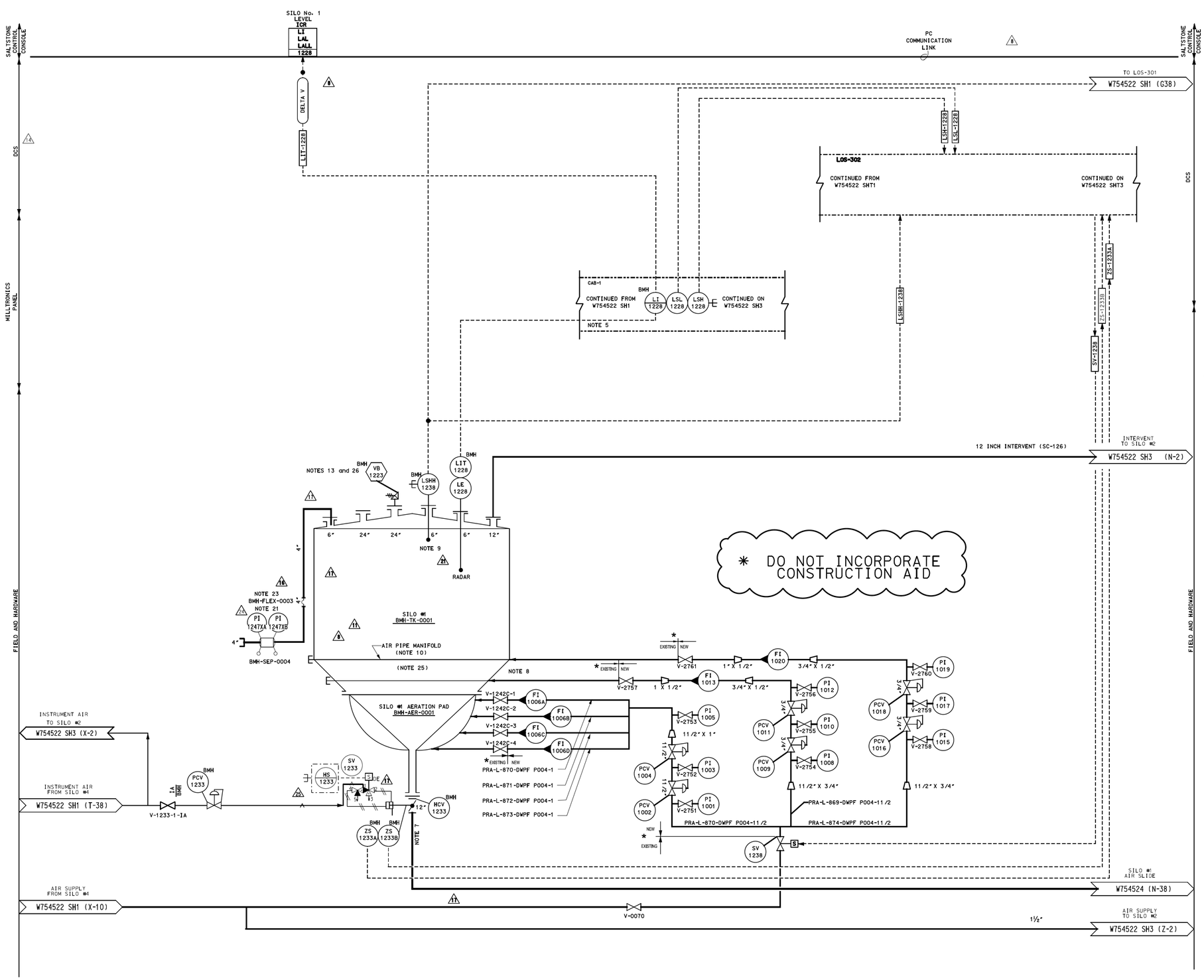

NOTES CONTINUED FROM SHEET 1

15. ALL COMPONENT NUMBERS PREFIXED BY Z-205000-PRA-, UNLESS OTHERWISE NOTED FOR BUILDING NUMBER OR SYSTEM.
16. DELETED
17. ALL PIPING NOT OTHERWISE SPECIFIED SHALL BE P-4, EXCEPT CONVEY PIPING WHICH SHALL BE SCH 80 WITH VICTAULIC COUPLINGS & WEARBACKS WHERE APPLICABLE.
18. DELETED
19. CONTACT PROCESS COMPUTER GROUP FOR PLC INFORMATION.
20. THE DISPLAY PANEL FOR PDIT-1227 AND PDIT-1230, THE WIRELESS RECEIVER, AND THE UPS ARE LOCATED IN 205-8Z.
21. REMOVABLE MAGNETIC SEPARATOR AND ENGINEERING APPROVED HOSE MAY BE USED WHEN TRANSFERRING MATERIALS FROM TRUCK TO SILO. WHEN NOT IN USE, THE PIPE, MAGNETIC SEPARATOR AND HOSE CONNECTIONS SHALL BE CAPPED TO PREVENT FOREIGN MATERIALS FROM ENTERING THE DRY MATERIAL SYSTEM. SEE M-CLC-Z-00122 FOR HOSE UNLISTED COMPONENT EVALUATION.
22. DUST COLLECTORS FAN BLOWERS MANUFACTURER IS NEW YORK BLOWER COMPANY. MODEL NUMBER NYB SIZE 174 GENERAL INDUSTRIAL SERIES 20. FAN ARRANGEMENT # 10 (BELT DRIVE), LS WHEEL, 10 H.P. OR ENGINEERING APPROVED EQUAL.
23. REMOVABLE MAGNETIC SEPARATOR AND ENGINEERING APPROVED HOSE BMH-SEP-0004 AND BMH-FLEX-3 CAN BE USED INTERCHANGEABLY BETWEEN SILO #1 AND SILO #4 PER SW24.5 SECTION 7.2.
24. DETAILED DRAWINGS FOR THE MAGNETIC SEPARATORS STELLITE PROTECTIVE SCREENS CAN BE FOUND IN R-R4-Z-00004.
25. TOP RING EQUIPPED WITH 4 NOZZLES AND MIDDLE RING EQUIPPED WITH 6 INJECTION NOZZLES.
26. SEE M-RVD-Z-00062 FOR VACUUM BREAKER.

UNITED STATES DEPARTMENT OF ENERGY

SAVANNAH RIVER SITE

THIS DRAWING HAS BEEN FURNISHED BY THE SAVANNAH RIVER SITE. THE INFORMATION AND KNOW HOW THEREON MAY NOT BE USED NOR THE DRAWING REPRODUCED WITHOUT WRITTEN PERMISSION OF THE PRIME CONTRACTOR. ALL REPRODUCTIONS IN WHOLE OR IN PART, INCLUDING VENDOR'S SHOP DRAWINGS, SHALL BEAR OR REFER TO THIS STAMP.

TITLE

(U) SAVANNAH RIVER PLANT-200Z AREA
DWPF-SALTSTONE
CEMENT AND FLY ASH STORAGE SILOS
PIPING AND INSTRUMENT DIAGRAM
PROCESS/INSTR MECH/CONT SYS

M	M6	Z	00108

SRP DRAWING NO.	SHEET NO.	DRAWING REV.
W754522	2 OF 4	30

Design Change Notice (DCN)
Continuation Page

NEW

DCP No. M-DCP-Z-11003	Revision 1	Document No. W754522	Revision 30
DCN No. M-DCP-Z-11003-M-00001	Revision 1	Project/Date N/A	Page 9 of 11

SRP DRAWING NO. W754522

THIS DCN

SILO No. 1, 2 & 3 DUST COLLECTOR DIFF. PRESS. ICR PDAH 1230

SILO No. 2 LEVEL ICR LI LAL LALL 1229

SALTSTONE CONTROL CONSOLE

PC COMMUNICATION LINK

DCS

ANN-301 W754522 SH1 (A-10)

SILO #3 LSHH-1240 W754522 SH4 (D-18)

TI PLC

MILLTRONICS PANEL

FIELD AND HARDWARE

PDSH-1230

LIT-1229

DELTA V

LSHH-1229 LSL-1229

LOS-302 CONTINUED FROM W754522 SH2 CONTINUED ON W754522 SH4

LSHH-1239

ZS-1234A

ZS-1234B

SV-1239

SEE NOTE 19

66 BMH 21L 1230X

LOS-301 (NOTE 2)

CONTINUED FROM W754522 SH1

12 BMH HIS 1230X BMH HS 1230 START/STOP

AUTO/OFF/MANUAL

START 56 34 RUNNING

MCC

BMH PDAH 1230X

SILOS #1, 2 & 3 DUST COLL.

BMH HS 1230 LOS301

BMH HIS 1230X LOS301

CAB-1 CONTINUED FROM W754522 SH2 BMH LI 1229 LSL 1229 LSH 1229 CONTINUED ON W754522 SH4

NOTE 5

INTERVENT FROM SILO #1 W754522 SH2 (N-16) 12 INCH INTERVENT (SC-126)

INTERVENT FROM SIO #3 W754522 SH4 (N17) 12 INCH INTERVENT

PLANT AIR DISTRIBUTION W754642 SH1 (Q-15) PLA705-P4B-2" 2" X 1"

PLA723-P4B-1"

SILO #4 DUST COLLECTION W754522 SH1 (L-38)

PA-V-1193-1 PA PA-V-1192-1 PA

BMH-V-1230-4 BMH-V-1230-2 ATMOS. PA-V-0053 BDC

BMH LSHH 1239 LIT 1229 LE 1229

BMH PDSH 1230 BMH-V-1230-1 NOTE 3, 22 DCOL-0001

BMH PDIT 1230 BMH PDI 1230

NOTE 20 BMH-V-1230-3

54" 12" 12" 24" 6" NOTE 9 6" 24" 6" 4"

RADAR 18

* DO NOT INCORPORATE CONSTRUCTION AID

NOTE 21 PI 1245XB PI 1245XA BMH-FLEX -0001 BMH-SEP -0002

SILO #2 BMH-TK-0002

AIR PIPE MANIFOLD (NOTE 10)

(NOTE 25) NOTE 8

* EXISTING NEW V-2772 1" X 1/2" FI 2020 3/4" X 1/2" V-2771 PI 2019

V-2768 1 X 1/2" FI 2013 3/4" X 1/2" V-2767 PI 2012 3/4" V-2770 PI 2017

V-1243C-1 FI 2006A V-1243C-2 FI 2006B V-1243C-3 FI 2006C V-1243C-4 FI 2006D

SILO #2 AERATION PAD BMH-AER-0002

V-2764 PI 2005 11/2" X 1" PCV 2011 3/4" V-2766 PI 2010 PCV 2018 3/4" V-2769 PI 2015

PCV 2004 11/2" V-2763 PI 2003 PCV 2009 3/4" V-2765 PI 2008 PCV 2016

PCV 2002 11/2" V-2762 PI 2001 11/2" X 3/4" 11/2" X 3/4"

* EXISTING NEW PRA-L-877-DWPF P004-1 PRA-L-878-DWPF P004-1 PRA-L-879-DWPF P004-1 PRA-L-880-DWPF P004-1

PRA-L-876-DWPF P004-11/2 PRA-L-877-DWPF P004-11/2 PRA-L-881-DWPF P004-11/2

INSTRUMENT AIR TO SILO #3 W754522 SH4(V-2)

INSTRUMENT AIR FROM SILO #1 W754522 SH2(T-1) IA BMH IA-V-1234-1 BMH PCV 1234

HS 1234 SV 1234 SIDE BMH HCV 1234 12" NOTE 7 BMH ZS 1234A BMH ZS 1234B

SV 1239

AIR SUPPLY FROM SILO #1 W754522 SH2(Y-16) V-0071 1½"

SILO #2 AIR SLIDE W754524 (M-10)

AIR SUPPLY TO SILO #3 W754522 SH4 (Z-4)

UNITED STATES DEPARTMENT OF ENERGY

SAVANNAH RIVER SITE

THIS DRAWING HAS BEEN FURNISHED BY THE SAVANNAH RIVER SITE. THE INFORMATION AND KNOW HOW THEREIN MAY NOT BE USED NOR THE DRAWING REPRODUCED WITHOUT WRITTEN PERMISSION OF THE PRIME CONTRACTOR. ALL REPRODUCTIONS IN WHOLE OR IN PART, INCLUDING VENDOR'S SRDP DRAWINGS, SHALL BEAR OR REFER ON THIS STAMP.

TITLE

(U) SAVANNAH RIVER PLANT-200Z AREA
DWPF-SALTSTONE
CEMENT AND FLY ASH STORAGE SILOS
PIPING AND INSTRUMENT DIAGRAM
PROCESS/INSTR MECH/CONT SYS

M M6 Z 00108

SRP DRAWING NO.	SHEET NO.	DRAWING REV.
W754522	3 OF 4	28

NEW

Design Change Notice (DCN)
Continuation Page

DCP No.	M-DCP-Z-11003	Revision	1	Document No.	W754522	Revision	30
DCN No.	M-DCP-Z-11003-N-00001	Revision	1	Project/Task No.	N/A	Page	10 of 11

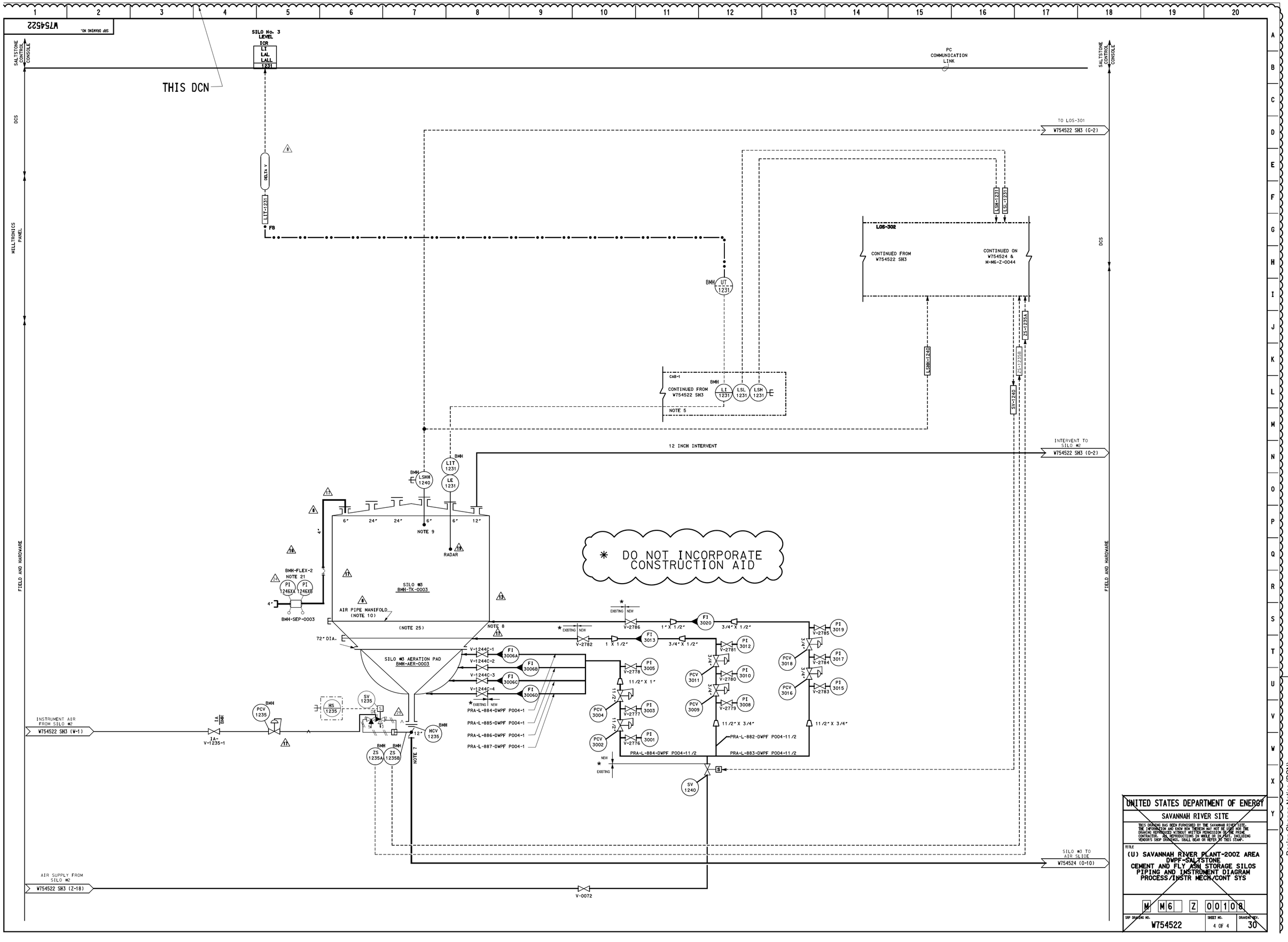
SRP DRAWING NO.
W754522
THIS DCN
SALTSTONE CONTROL CONSOLE
DCS
MILLTRONICS PANEL
FIELD AND HARDWARE
SILO No. 3 LEVEL
IQR
LI
LAL
LALL
1231
PC COMMUNICATION LINK
TO LOS-301
W754522 SH3 (G-2)
DELTA V
LIT-1231
FB
LSHH-1231
LSL-1231
LOS-302
CONTINUED FROM W754522 SH3
CONTINUED ON W754524 & M-M6-Z-0044
BMH
LT 1231
ZS-1235A
ZS-1235B
LSHH-1240
SV-1240
CAB-1
CONTINUED FROM W754522 SH3
LI 1231
LSL 1231
LSH 1231
NOTE 5
INTERVENT TO SILO #2
W754522 SH3 (O-2)
12 INCH INTERVENT
LIT 1231
LE 1231
LSHH 1240
6"
24"
24"
6"
6"
12"
NOTE 9
RADAR
BMH-FLEX-2
NOTE 21
PI 1246XA
PI 1246XB
4"
BMH-SEP-0003
SILO #3 BMH-TK-0003
AIR PIPE MANIFOLD (NOTE 10)
(NOTE 25)
NOTE 8
72" DIA.
SILO #3 AERATION PAD BMH-AER-0003
V-1244C-1
V-1244C-2
V-1244C-3
V-1244C-4
FI 3006A
FI 3006B
FI 3006C
FI 3006D
EXISTING
NEW
PRA-L-884-DWPF P004-1
PRA-L-885-DWPF P004-1
PRA-L-886-DWPF P004-1
PRA-L-887-DWPF P004-1
V-2786
V-2782
1 X 1/2"
FI 3013
FI 3020
1" X 1/2"
3/4" X 1/2"
V-2778
PI 3005
11/2" X 1"
V-2777
PI 3003
V-2776
PI 3001
PCV 3004
PCV 3002
V-2781
PI 3012
V-2780
PI 3010
V-2779
PI 3008
PCV 3011
PCV 3009
11/2" X 3/4"
PRA-L-882-DWPF P004-11/2
PRA-L-883-DWPF P004-11/2
PRA-L-884-DWPF P004-11/2
V-2785
PI 3019
V-2784
PI 3017
V-2783
PI 3015
PCV 3018
PCV 3016
3/4"
SV 1240
DO NOT INCORPORATE CONSTRUCTION AID
INSTRUMENT AIR FROM SILO #2
W754522 SH3 (W-1)
IA-V-1235-1
PCV 1235
HS 1235
SV 1235
ZS 1235A
ZS 1235B
HCV 1235
12"
NOTE 7
SILO #3 TO AIR SLIDE
W754524 (O-10)
AIR SUPPLY FROM SILO #2
W754522 SH3 (Z-18)
V-0072
UNITED STATES DEPARTMENT OF ENERGY
SAVANNAH RIVER SITE
THIS DRAWING HAS BEEN FURNISHED BY THE SAVANNAH RIVER SITE. THE INFORMATION AND KNOW HOW THEREON MAY NOT BE USED NOR THE DRAWING REPRODUCED WITHOUT WRITTEN PERMISSION OF THE PRIME CONTRACTOR. ALL REPRODUCTIONS IN WHOLE OR IN PART, INCLUDING VENDOR'S SHOP DRAWINGS, SHALL BEAR OR REFER TO THIS STAMP.
TITLE
(U) SAVANNAH RIVER PLANT-200Z AREA
DWPF-SALTSTONE
CEMENT AND FLY ASH STORAGE SILOS
PIPING AND INSTRUMENT DIAGRAM
PROCESS/INSTR MECH/CONT SYS
M M6 Z 00108
SRP DRAWING NO. W754522
SHEET NO. 4 OF 4
DRAWING REV. 30
Design Change Notice (DCN)
Continuation Page
NEW
DCP No. M-DCP-Z-11003
DCN No. M-DCP-Z-11003-M-00001
Revision 1
Revision 1
Document No. W754522
Project Title No. N/A
Revision 30
Page 11 of 11

Design Change Notice (DCN)

DCP Number	Revision	
M-DCP-Z-11003	1	
DCN No. M-DCP-Z-11003-M-00002	**Revision** 1	**Project/Task No** N/A

Design Change Notice (DCN)

Classification Reviewer: N/A

Date: 05/21/2019

Design Change Notice (DCN)

DCP Number	Revision
M-DCP-Z-11003	1

DCN No.	Revision	Project/Task No
M-DCP-Z-11003-M-00002	1	N/A

Document No. (Doc Rev)
W754524;16

Reason for Change (Be specific)
Replacement of the butterfly valves with Knife Gate Valves requires modifications to the control system.

Description of Change
Modify the controls for the new Knife Gate valves. Update silo P&ID annotation arrows.

Engineering Approvals

Originator	Date	Responsible Engineer Manager	Date
STASIE, GARY A.	05/20/2019	SCHILLING, CHRISTOPHER A.	05/21/2019

Verifier/Checker	Date	Discipline
MASSEY, DAVID C.	05/20/2019	M-MECHANICAL

Verification Method(s)
Design Check (GS/PS only)

ANALYZE FOR SAFETY, ECOLOGY, AND MINIMUM ESSENTIAL DESIGN

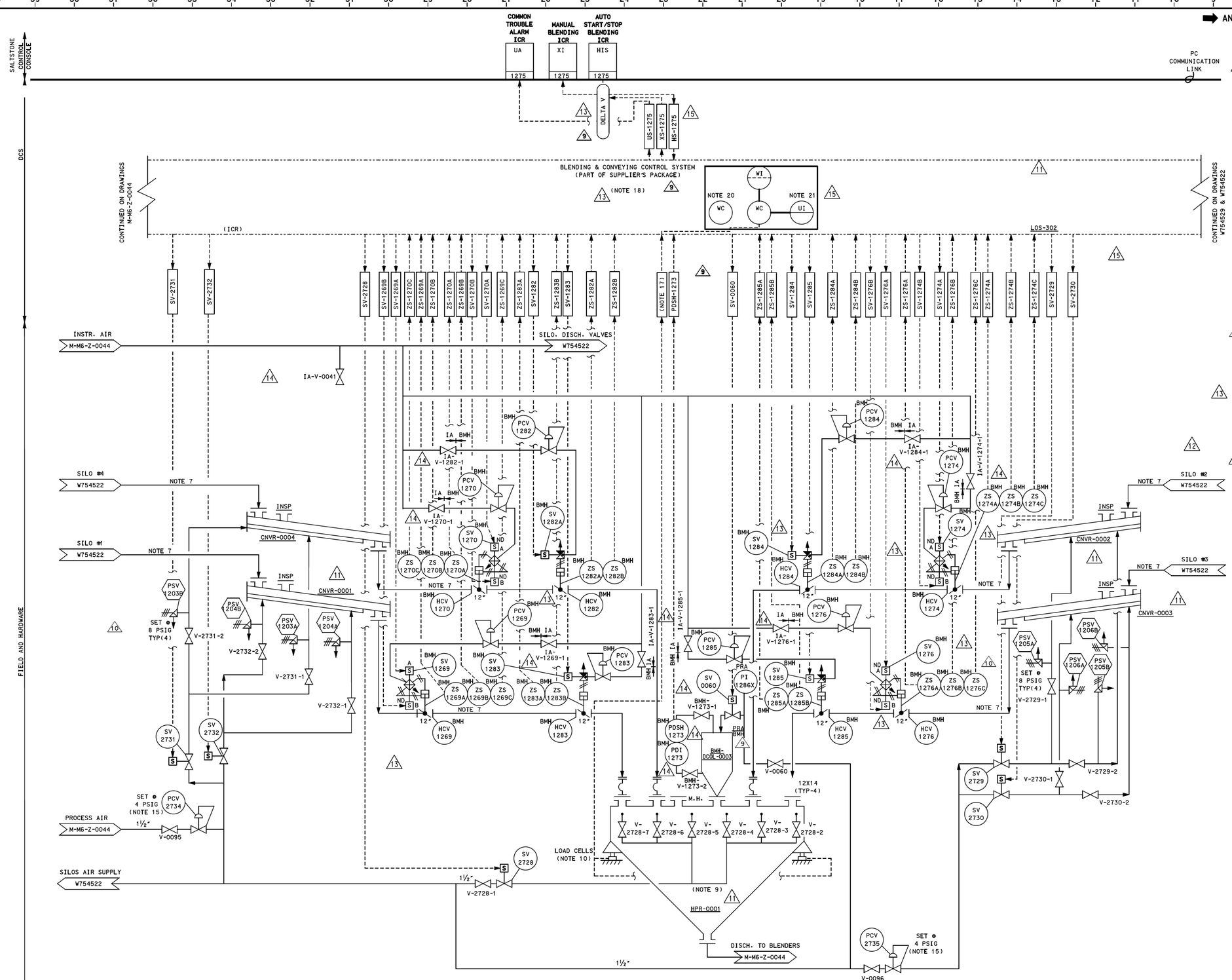

EQUIPMENT IDENTIFICATION

EQUIPMENT NUMBER	EQUIPMENT NAME	REFERENCE DRAWING	EQUIPMENT DESIGN PARAMETERS
Z-205000-BMH-HPR-0001	BATCH WEIGH HOPPER	MH-21142-48(1) BPF 218582	115 CU.FT.. C/S W/LOAD CELLS
Z-205000-BMH-DCOL-0003	WEIGH HOPPER DUST COLLECTOR	MH-21142-79(1) BPF 218582	95 SQ.FT. CLOTH AREA
Z-205000-BMH-CNVR-0001	SILO #1 AIR SLIDE	MH-21142-21(1) BPF 218582	12"W X 15'L
Z-205000-BMH-CNVR-0002	SILO #2 AIR SLIDE	BPF 218582	12"W X 15'L
Z-205000-BMH-CNVR-0003	SILO #3 AIR SLIDE	MH-21142-21(1) BPF 218582	12"W X 15'L
Z-205000-BMH-CNVR-0004	SILO #4 AIR SLIDE	MH-21142-21(1) BPF 218582	12"W X 15'L
Z-205000-BMH-LOS-0302	LOCAL OPERATING STATION LOS-302	MH-21142-18(1) BPF 218582	80"H X 72"W X 14"D

NOTES

1. DELETED.
2. DELETED.
3. DELETED.
4. ENTIRE CONTENTS OF THIS P&ID WITH THE EXCEPTION OF THE BUYERS DCS(DELTA V) IS PROVIDED IN VENDOR MATERIAL REQUISITION PACKAGE MH 21142 AND AC52406A.
5. DELETED.
6. DELETED.
7. THESE LINES SHOW FLOW PATHS ONLY AND DO NOT RESPRESENT PIPING.
8. DELETED.
9. SIX AERATION ASSEMBLIES ARE PROVIDED. EACH WITH SHUTOFF AND CHECK VALVES, FLEX HOSE AND AIR JET.
10. THREE LOAD CELL MOUNTS ARE PROVIDED. EACH WITH TWO LOAD CELL IN SERIES.
11. DELETED.
12. ALL PIPING LESS THAN 2" TO BE SUPPLIED AND ROUTED BY SC-122.
13. FOR DETAILED SYSTEM INFORMATION SEE V.P NOS AC52406 SH.040, 041& 042 AND ALSO MH21142-46(1) AND-47 (1).
14. DELETED.
15. PRESSURE REGULATORS PCV-2735 & 2736 TO BE PURCHASED AND INSTALLED BY WESTINGHOUSE OPERATIONS.
16. ALL COMPONENT NUMBERS PREFIXED BY Z-205000-PRA-, UNLESS OTHERWISE NOTED FOR BUILDING NUMBER OR SYSTEM.
17. FOR DETAILED WIRING DIAGRAM SEE V.P. NO AC52406A SH. 013.
18. VALVE POSITION INDICATING LIGHTS APPEAR ON LOS-302, AND ARE HARD WIRED INDIVIDUALLY FROM LIMIT SWITCH TO LOS-302. "A" SWITCH INDICATES OPEN POSITION, "B" SWITCH INDICATES CLOSED POSITION. APPLICABLE TO VALVES HCV-1269, 1270, 1274, 1276, 1282, 1283, 1284, & 1285.
19. ALL PIPING SHALL BE IN ACCORDANCE WITH P-4.
20. HI-550 HARDY WEIGHT CONTROLLERS WITH WAVESAVER DISPLAY/ KEYBOARD.
21. PANELVIEW 550 WITH KEYPAD AND TOUCHSCREEN; CONNECTED TO WEIGHT CONTROLLER BY DEVICE NET.
22. SCOTCH POLYETHYLENE COATED CLOTH TAPE 390, OR ENGINEERING APPROVED EQUAL. CAN BE USED TO PROVIDE A MOISTURE INTRUSION BARRIER ON THE FLEXIBLE CONNECTION IN THE BMH SYSTEM.

W 754524 LAST 16 REV.

PROGRAMMABLE CON*******

INPUT				OUTPUT	
1 - 5 V OR 4 - 20 mA	MILLIVOLT	PULSE	DIGITAL 120 VAC	1 - 5 V OR 4 - 20 mA	DIGITAL 120 VAC
0	0	0	3	0	1

	NUMBERS ALLOTTED	LAST NUMBER USED	NUMBERS CANCELLED
INSTRUMENT LOOP NUMBERS	2725-2739 1266-1285 1266X-1311X	2736 1285 1311X	1266,1280,1281

BECHTEL NATIONAL INC.
SAN FRANCISCO

JOB NO. 13239

THIS DOCUMENT CONTAINS INFORMATION RELATING TO ACTIVITIES OF THE U.S. DEPARTMENT OF ENERGY. NOT TO BE REPRODUCED OR RELEASED WITHOUT PRIOR APPROVAL.

M/F	BLDG.	PROJ.	DA	TYPE		
	--	S1780	Z205	21/71	W 754524	LAST 16 REV.

(U) SAVANNAH RIVER PLANT-200Z AREA
DEFENSE WASTE PROCESSING FACILITY - SALTSTONE PREMIX BLENDING AND CONVEYING SYSTEM
PIPING AND INSTRUMENT DIAGRAM
SHEET 1 OF 2

PROCESS/INSTR. MECH/CONST SYS

PROJ.	NO.	REVISION	DFT	ENG	CHK	SPV	PE	DUP	DATE
S1780	7	BSRI REV-REISSUED AS-BUILT (RAB)		ORIGINAL		SIGNED			28AUG92
		INCORP. AS-BUILT INFO PER							
		DCF 10669							
S1780	6	REVISED AND REISSUED FOR FINAL		ORIGINAL		SIGNED			20FEB87
S1780	4	CONSTRUCTION RELEASE (FCR)		ORIGINAL		SIGNED			26MAY88
S1780	3	ISSUED FOR AS-BUILT		ORIGINAL		SIGNED			11OCT88
S1780	2	ISSUED FOR POST AS-BUILT		ORIGINAL		SIGNED			3NOV89
		ISSUED FOR POST AS-BUILT							
		INCORP. DCN-W754524-5A THRU 5C							

STANDARDS	REFERENCE DRAWINGS
	W754540 PFD
9	M-M6-Z-0044 SHT. 2 OF 2
	13

THIS DRAWING HAS BEEN FURNISHED BY E.I.DU PONT DE NEMOURS & CO. THE INFORMATION AND KNOW-HOW THEREON MAY NOT BE USED NOR THE DRAWING REPRODUCED WITHOUT THE WRITTEN PERMISSION OF DU PONT. ALL REPRODUCTIONS IN WHOLE OR IN PART, INCLUDING VENDOR'S SHOP DRAWINGS, SHALL BEAR OR REFER TO THIS STAMP.

PROJECT	S1780
SCALE	NONE
DRAWN	T.VASILIW
CHECKED	
APPROVED-I.C.R.	G.W.OAKES
APPROVED FINAL	P.F. REINHARD

DATE: 27DEC84; 28APR86; 19JUN86

DRC-1

E.I.DU PONT DE NEMOURS & CO., INC.
WILMINGTON, DELAWARE
ENGINEERING DEPARTMENT

W754524

LAST CADD REV BY: R.A. KING DATE: 12/09/15

PROJ.	REV. NO.	DATE	REVISION	PRP'D	LEAD ENG	CHK'D	APRV'D	APRV'D	APRV'D
N/A	16		INCORPORATED M-DCF-Z-00480		APPROVALS MAINTAINED IN DCR/EDMS				
N/A	15	05/11/10	INCORPORATED J-DCF-Z-07002 (REF DCN J002).	APPROVALS MAINTAINED IN DCR/EDMS AND MICROFILM					
N/A	14	07/12/06	REVISED CLI's		APPROVAL SIGNATURES IN AIM				
N/A	13	11/10/05	INCORPORATED M-DCF-Z-00170		SIGNATURES ON MICROFILM				

M-M6-Z-0071 DRAWING NO. — UNITED STATES DEPARTMENT OF ENERGY — SAVANNAH RIVER SITE

PROJ.	REV. NO.	DATE	REVISION	PRP'D	LEAD ENG	CHK'D	APRV'D	APRV'D	APRV'D
N/A	12	07/01/02	INCORPORATED M-DCF-Z-00128 (PE&CD/CM)	BCW	N/A	KEH	TDL	N/A	N/A
S1780	11	07/23/01	INCORPORATED G-DCF-Z-00012, M-DCF-Z-00107 AND	BCW	N/A	PCM	TDL	N/A	N/A
			J-DCF-Z-94002 (J001) (PE&CD/CM)						
S1780	10	05/07/97	AS-BUILT. INCORP. M-DCP-Z-93006. DCN 001		SIGNATURES ON MICROFILM				
S1780	9	4/20/95	INCORP J-DCF-Z-00013 AND DCN M-001 (M-DCP-Z-93002/0)		SIGNATURES ON MICROFILM				
S1780	8	6/30/94	INCORP M-DCF-Z-00001		SIGNATURES ON MICROFILM				

M-M6-Z-0071 E & PD DRAWING NO. — UNITED STATES DEPARTMENT OF ENERGY — SAVANNAH RIVER SITE

Design Change Notice (DCN) Continuation Page

BEFORE

DCP No.	DCN No.	Document No.	Project Task No.	Revision	Revision	Revision	Page
W-DCP-Z-11003	W-DCP-Z-11003-M-00002	W754524	N/A	1	1	16	3 of 4

NFD-10-13 (12/82)

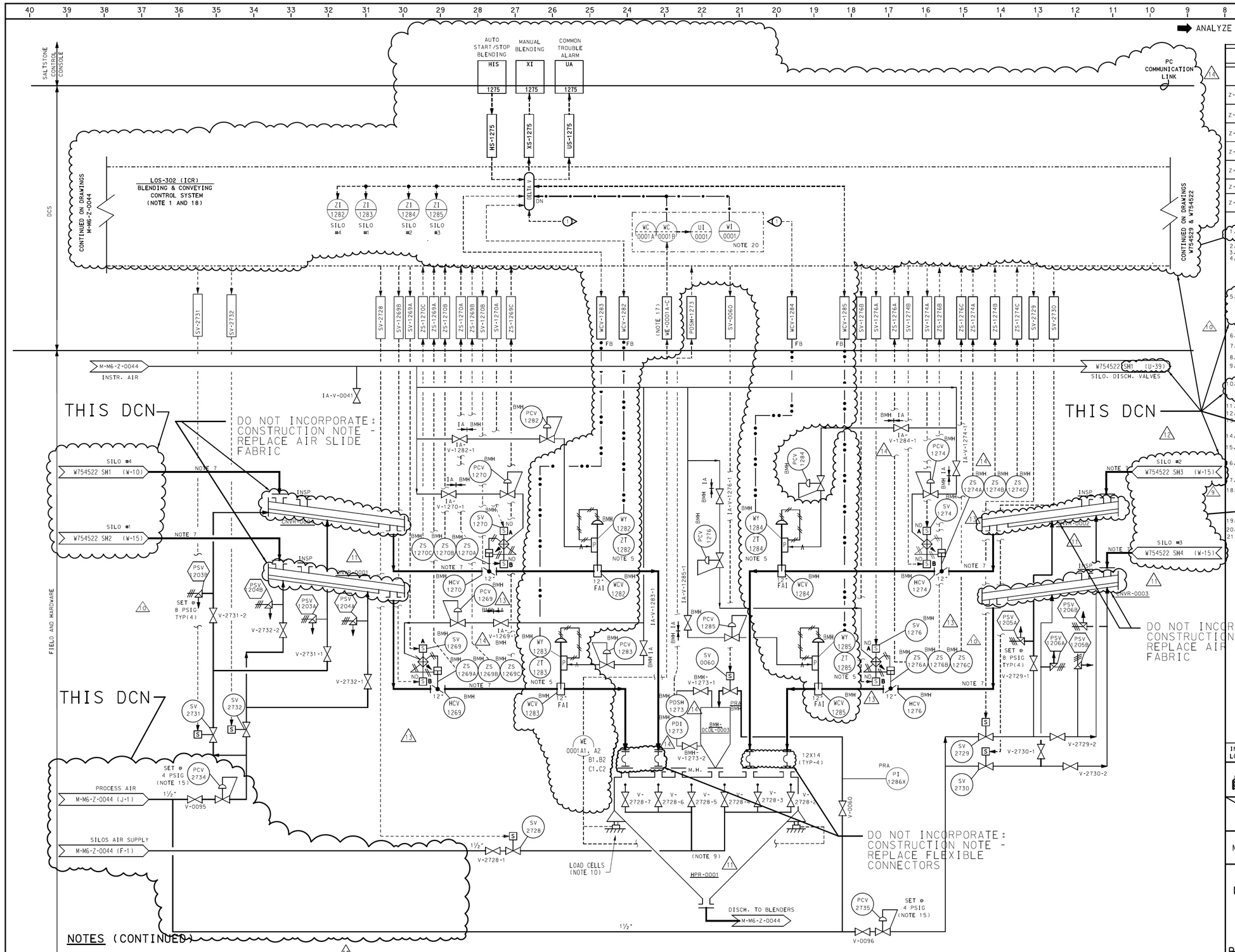

EQUIPMENT IDENTIFICATION

EQUIPMENT NUMBER	EQUIPMENT NAME	REFERENCE DRAWING	EQUIPMENT DESIGN PARAMETERS
Z-205000-BMH-HPR-0001	BATCH WEIGH HOPPER	MH-21142-48(1) BPF 218582	115 CU.FT.. C/S W/LOAD CELLS
Z-205000-BMH-DCOL-0003	WEIGH HOPPER DUST COLLECTOR	MH-21142-79(1) BPF 218582	95 SQ.FT. CLOTH AREA
Z-205000-BMH-CNVR-0001	SILO #1 AIR SLIDE	MH-21142-21(1) BPF 218582	12"W X 15'L
Z-205000-BMH-CNVR-0002	SILO #2 AIR SLIDE	BPF 218582	12"W X 15'L
Z-205000-BMH-CNVR-0003	SILO #3 AIR SLIDE	MH-21142-21(1) BPF 218582	12"W X 15'L
Z-205000-BMH-CNVR-0004	SILO #4 AIR SLIDE	MH-21142-21(1) BPF 218582	12"W X 15'L
Z-205000-BMH-LOS-0302	LOCAL OPERATING STATION LOS-302	MH-21142-18(1) BPF 218582	80"H X 72"W X 14"D

NOTES

1. LOS-302 INSTRUMENTATION AND CONTROL SYSTEM ARE PROVIDED IN VENDOR'S MATERIAL REQUISITION PACKAGE AC52406A
2. DELETED.
3. DELETED.
4. ENTIRE CONTENTS OF THIS P&ID WITH THE EXCEPTION OF THE BUYERS DCS(DELTA V) IS PROVIDED IN VENDOR MATERIAL REQUISITION PACKAGE MH 21142 AND AC52406A.
5. WCV'S ARE V-NOTCH KNIFE GATE VALVES WITH ONE PIECE RENEWABLE SEAT DESIGN WITH PNEUMATIC ACTUATOR. THE FOLLOWING COMPONENTS ARE PURCHASED WITH THE VALVE: FOUNDATION FIELD BUS OPERATOR. VALVE POSITION FEEDBACK (ZT-XXXX), AND FISHER DVC6005F PNEUMATIC POSITIONER (WY-XXXX).
6. DELETED.
7. THESE LINES SHOW FLOW PATHS ONLY AND DO NOT RESPRESENT PIPING.
8. DELETED.
9. SIX AERATION ASSEMBLIES ARE PROVIDED. EACH WITH SHUTOFF AND CHECK VALVES, FLEX HOSE AND AIR JET.
10. THREE LOAD CELL MOUNTS ARE PROVIDED. EACH WITH TWO LOAD CELL IN SERIES. FOR DETAILED WIRING DIAGRAMS SEE V.P. NO. AC52406A, SH. 013. SEE TAG NUMBERS WE-1275A1-A2, B1-B2, C1-C2.
11. DELETED.
12. ALL PIPING LESS THAN 2" TO BE SUPPLIED AND ROUTED BY SC-122.
13. FOR DETAILED SYSTEM INFORMATION SEE V.P NOS AC52406 SH.040, 041& 042 AND ALSO MH21142-46(1) AND-47 (1).
14. DELETED.
15. PRESSURE REGULATORS PCV-2734 & 2735 TO BE PURCHASED AND INSTALLED BY WESTINGHOUSE OPERATIONS.
16. ALL COMPONENT NUMBERS PREFIXED BY Z-205000-PRA-, UNLESS OTHERWISE NOTED FOR BUILDING NUMBER OR SYSTEM.
17. FOR DETAILED WIRING DIAGRAM SEE V.P. NO AC52406A SH. 013.
18. VALVE POSITION INDICATING LIGHTS APPEAR ON LOS-302, AND ARE HARD WIRED INDIVIDUALLY FROM LIMIT SWITCH TO LOS-302. "A" SWITCH INDICATES OPEN POSITION, "B" SWITCH INDICATES CLOSED POSITION. APPLICABLE TO VALVES HCV-1269, 1270, 1274, & 1276.
19. ALL PIPING SHALL BE IN ACCORDANCE WITH P-4.
20. HI-550 HARDY WEIGHT CONTROLLERS WITH WAVESAVER DISPLAY/ KEYBOARD.
21. PANELVIEW 550 WITH KEYPAD AND TOUCHSCREEN: CONNECTED TO WEIGHT CONTROLLER BY DEVICE NET.

NOTES (CONTINUED)

22. SCOTCH POLYETHYLENE COATED CLOTH TAPE 390, OR ENGINEERING APPROVED EQUAL. CAN BE USED TO PROVIDE A MOISTURE INTRUSION BARRIER ON THE FLEXIBLE CONNECTION IN THE BMH SYSTEM.

W 754524 — LAST REV. 16

PROGRAMMABLE CON*******

INPUT				OUTPUT	
1 - 5 V OR 4 - 20 mA	MILLIVOLT	PULSE	DIGITAL 120 VAC	1 - 5 V OR 4 - 20 mA	DIGITAL 120 VAC
0	0	0	3	0	1

	NUMBERS ALLOTTED	LAST NUMBER USED	NUMBERS CANCELLED
INSTRUMENT LOOP NUMBERS	2725-2739 1266-1285 1266X-1311X	2736 1285 1311X	1266,1280,1281

BECHTEL NATIONAL INC.
SAN FRANCISCO
JOB NO. 13239

THIS DOCUMENT CONTAINS INFORMATION RELATING TO ACTIVITIES OF THE U.S. DEPARTMENT OF ENERGY. NOT TO BE REPRODUCED OR RELEASED WITHOUT PRIOR APPROVAL.

M/F	BLDG.	PROJ.	DA	TYPE		LAST
	--	S1780	Z205	21/71	W 754524	16 REV.

(U) SAVANNAH RIVER PLANT-200Z AREA
DEFENSE WASTE PROCESSING FACILITY - SALTSTONE

PIPING AND INSTRUMENT DIAGRAM
SHEET 1 OF 2

PROCESS/INSTR. MECH/CONST SYS

PROJ	NO.	REVISION	DFT	ENG	CHK	SPV	PE	DUP	DATE
S1780	7	BSRI REV-REISSUED AS-BUILT (RAB)		ORIGINAL SIGNED					28AUG92
		INCORP. AS-BUILT INFO PER							
		DCF 10669							
S1780	3	REVISED AND REISSUED FOR FINAL		ORIGINAL SIGNED					20FEB87
S1780	4	CONSTRUCTION RELEASE (FCS)		ORIGINAL SIGNED					26MAY88
S1780	5	ISSUED FOR AS-BUILT		ORIGINAL SIGNED					110CT88
S1780	6	ISSUED FOR POST AS-BUILT		ORIGINAL SIGNED					3NOV89
		ISSUED FOR POST AS-BUILT							
		INCORP. DCN-W754524-5A THRU 5C							

STANDARDS

REFERENCE DRAWINGS: W754540 PFD; M-M6-Z-0044 SHT. 2 OF 2

THIS DRAWING HAS BEEN FURNISHED BY E.I. DU PONT DE NEMOURS & CO. THE INFORMATION AND KNOW-HOW THEREON MAY NOT BE USED NOR THE DRAWING REPRODUCED WITHOUT THE WRITTEN PERMISSION OF DU PONT. ALL REPRODUCTIONS IN WHOLE OR IN PART, INCLUDING VENDOR'S SHOP DRAWINGS, SHALL BEAR OR REFER TO THIS STAMP.

PROJECT	S1780	
SCALE	NONE	DATE
DRAWN	Y.VASILIW	27DEC84
CHECKED		
APPROVED - I.C.R.	G.W.OAKES	28APR86
APPROVED FINAL	P.F. REINHARD	19JUN86

DRC-1 DUPONT
E.I. DU PONT DE NEMOURS & CO., INC.
WILMINGTON, DELAWARE
ENGINEERING DEPARTMENT
W754524

LAST CADD REV BY: S.D.HEVEL DATE: 7/27/12

PROJ. NO.	REV. NO.	DATE	REVISION	APPROVAL MAINTAINED IN DCR/EDWS/MICROFILM	PRP'D	LEAD ENG	CHK'D	APRV'D	APRV'D	APRV'D
N/A	16		INCORPORATED M-DCF-Z-00480							
N/A	15	05/11/10	INCORPORATED J-DCP-Z-07002 (SEE DCN-002).	APPROVALS MAINTAINED IN DCR/EDWS/MICROFILM						
N/A	14	07/12/06	REVISED CLI's	APPROV SIGNATURES ON ATM						
N/A	13	11/10/05	INCORPORATED M-DCF-Z-00170	SIGNATURES ON MICROFILM						

PROJ. NO.	REV. NO.	DATE	REVISION	PRP'D	LEAD ENG	CHK'D	APRV'D	APRV'D	APRV'D
N/A	12	07/01/02	INCORPORATED M-DCF-Z-00128 (PE&CD/CM)	BCW	N/A	KEH	TDL	N/A	N/A
S1780	11	07/23/97	INCORPORATED G-DCF-Z-00012, M-DCF-Z-00107 AND J-DCP-Z-94002 (-001) (PE&CD/CM)	BCW	N/A	DCM	TDL	N/A	N/A
S1780	10	05/07/97	AS-BUILT. INCORP M-DCP-Z-93005, DCN 001		SIGNATURES ON MICROFILM				
S1780	9	4/20/95	INCORP J-DCF-Z-00013 AND DCN M-001 (M-DCP-Z-93002/0)		SIGNATURES ON MICROFILM				
S1780	8	6/30/94	INCORP M-DCF-Z-00001		SIGNATURES ON MICROFILM				

M-M6-Z-0071 — DRAWING NO.
UNITED STATES DEPARTMENT OF ENERGY
SAVANNAH RIVER SITE

M-M6-Z-0071 — E & PD DRAWING NO.
UNITED STATES DEPARTMENT OF ENERGY
SAVANNAH RIVER SITE

NFD-10-13 (12/82)

Design Change Notice (DCN) Continuation Page

AFTER

Revision	16	Page	4 of 4
Document No.	W754524		
Project/Task No.	N/A		
Revision	1		
Revision	1		
DCP No.	M-DCP-Z-11003	DCN No.	M-DCP-Z-11003-M-00002

Design Change Notice (DCN)

DCP Number	Revision	
M-DCP-Z-11003	1	
DCN No. M-DCP-Z-11003-M-00003	**Revision** 1	**Project/Task No** N/A

Design Change Notice (DCN)

Classification Reviewer: N/A

Date: 05/21/2019

Design Change Notice (DCN)

DCP Number	Revision	
M-DCP-Z-11003	1	
DCN No.	**Revision**	**Project/Task No**
M-DCP-Z-11003-M-00003	1	N/A

Document No. (Doc Rev)
W754642;36

Reason for Change (Be specific)
Correct flag coordinate references on supply to silo bin vents.

Description of Change
Update references on flag going to P&ID W754522.

Engineering Approvals

Originator	Date	Responsible Engineer Manager	Date
STASIE, GARY A.	05/20/2019	SCHILLING, CHRISTOPHER A.	05/21/2019

Verifier/Checker	Date	Discipline
MASSEY, DAVID C.	05/20/2019	M-MECHANICAL

Verification Method(s)
Design Check (GS/PS only)

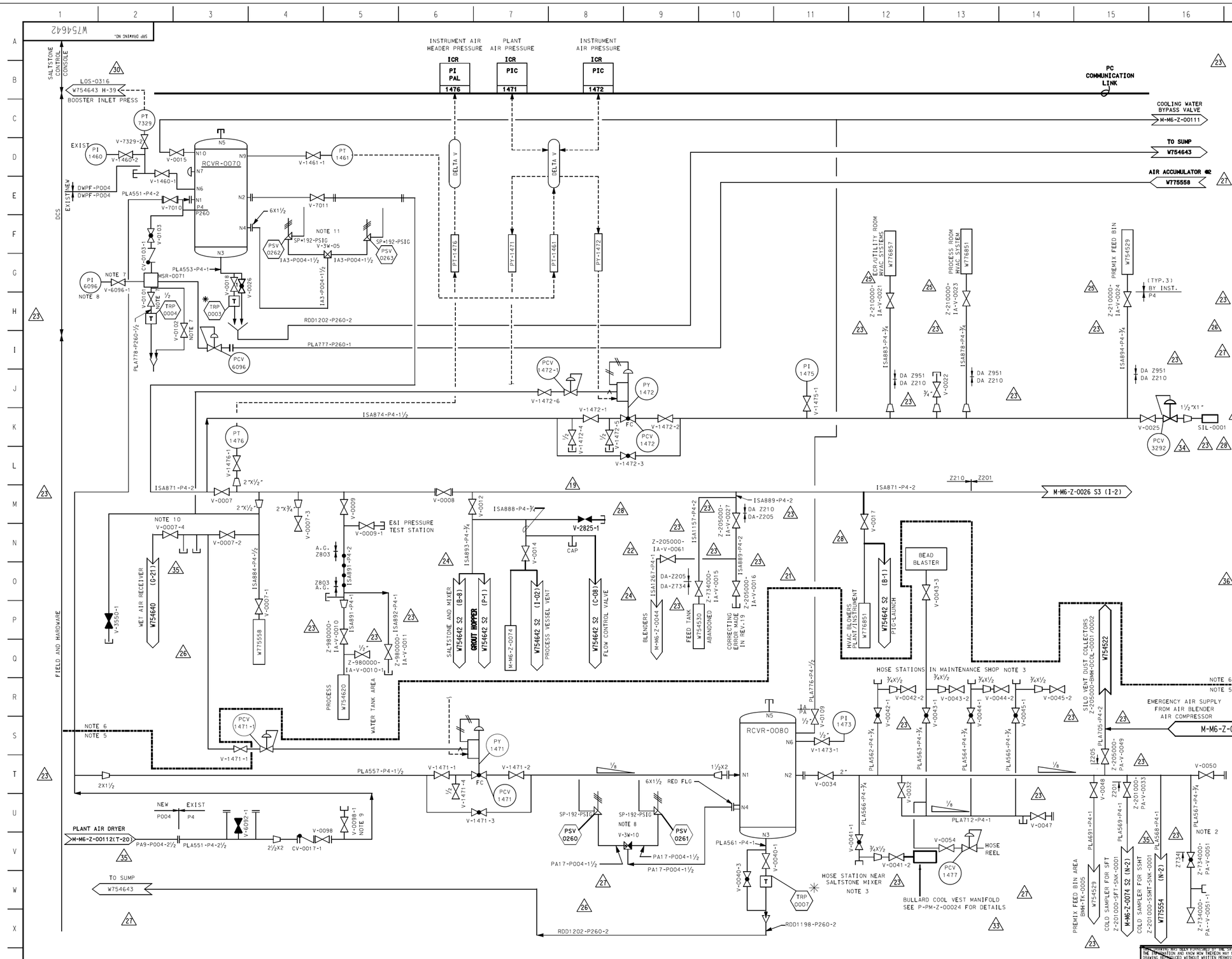

EQUIPMENT IDENTIFICATION

EQUIPMENT NUMBER	EQUIPMENT NAME	REFERENCE DRAWING	EQUIPMENT DESIGN PARAMETERS
Z-210000-PA-RCVR-0080	PLANT AIR RECEIVER	VP#MH20990-70 BPF#218364	2'6"±X6'H.C.S. 32 CU. FT.
Z-210000-PA-RCVR-0070	INSTRUMENT AIR RECEIVER	VP#MH20990-62 BPF#218364	2'6"±X6'H.C.S. 32 CU. FT.

NOTES

1. DELETED.
2. PROVIDE DRIP LEGS AT LOW POINTS OF PLANT AIR HEADER BRANCHES.
3. HOSE STATION AND HOSE RACK INSTALLTION WILL BE IN ACCORDANCE WITH DU PONT STANDARD G1M AND GAM. TAKE-OFF CONNECTION WILL BE IN ACCORDANCE WITH DU PONT STANDARD G3M.
4. HOSE CONNECTIONS SHALL BE IN ACCORDANCE WITH SPECIFICATION P25.
5. ALL COMPONENT NUMBERS WITHIN THIS BOUNDARY PREFIXED WITH Z-210000-PA-, UNLESS OTHERWISE NOTED FOR BUILDING NUMBER OR SYSTEM.
6. ALL COMPONENT NUMBERS WITHIN THIS BOUNDARY PREFIXED WITH Z-210000-IA-, UNLESS OTHERWISE NOTED FOR BUILDING NUMBER OR SYSTEM.
7. THREADED VALVE INSTALLED WITH ½" SCHEDULE 160 PIPE.
8. FABRICATE PA RECEIVER SAFETY RELIEF VALVE INLET AND DISCHARGE PIPING IN ACCORDANCE WITH M-RVD-Z-00092.
9. PORTABLE COMPRESSOR SHALL HAVE MAXIMUM PRESSURE OF 150 PSIG AT 185 CFM/4KW PER THE REQUIREMENTS OF M-RVD-N-00307.
10. INSTALL VALVE IN ACCORDANCE WITH DWPF-P004. EXAMINE AND TEST TIE-IN JOINT IN ACCORDANCE WITH WSRC-TM-95-1, STD. 15060, TABLE 5.4.2-1, OPTION NORMAL-3.
11. FABRICATE IA RECEIVER SAFETY RELIEF VALVE INLET AND DISCHARGE PIPING IN ACCORDANCE WITH M-RVD-Z-00093.
12. ALL COMPONENT NUMBERS SHOWN ON SHEETS 2 AND 3, ARE PREFIXED WITH Z-201000-IA-, UNLESS OTHERWISE NOTED FOR BUILDING NUMBER OR SYSTEM.
13. INSTRUMENT AIR SUPPLY TUBING IS FIELD RUN FROM THE ROOT VALVES SHOWN ON THIS DRAWING TO THE INSTRUMENT AIR USERS SHOWN ON THE REFERENCED PROCESS P&ID.
14. INSTRUMENT AIR SUPPLY TUBING THAT IS DENOTED AS SP202R SHALL PER T-ESR-S-00010-DWPF-SP202R AND SHALL BE INSTALLED PER MANUAL WSRC-TM-95-1 STANDARD 15980.
15. INSTRUMENT AIR DISTRIBUTION PIPING FOR THE SFT & CCBT AREAS WAS RELOCATED TO THIS P&ID FROM M-M6-Z-0074 AND M-M6-Z-0003 AS PART OF A RE-DRAFTING EFFORT FOR PROJ Y544.
16. INSTRUMENT AIR SUPPLY TUBING THAT IS DENOTED AS PS-204A SHALL PER PIPING SPECIFICATION PS-204A IN MANUAL WSRC-IM-95-58 GUIDE 15060 AND SHALL BE INSTALLED PER MANUAL WSRC-TM-95-1 STANDARD 15980.
17. PCV-8020 IS A FILTER AND REGULATOR, MCV-0007 IS A MIST LUBRICATOR, AND V-0186 IS AN ISOLATED VALVE PROVIDED BY VENDOR.

PROJ.	REV. NO.	DATE	REVISION	PRP'D	LEAD ENG	CHK'D	APRV'D	APRV'D	APRV'D
Y544	35	05/13/05	INCORPORATED M-DCP-Z-10002 (REF. DCN M-00006).	APPROVALS MAINTAINED IN DCR/EDWS					
N/A	36		INCORPORATED M-DCP-Z-12011 (REF. DCN M-00002) AND M-DCF-Z-00470.	APPROVALS MAINTAINED IN DCR/EDWS					

PROJ.	REV. NO.	DATE	REVISION	PRP'D	LEAD ENG	CHK'D	APRV'D	APRV'D	APRV'D
N/A	27	05/22/12	INCORPORATED M-DCF-Z-00353, M-DCF-Z-00357, M-DCF-Z-00364, AND	APPROVALS MAINTAINED IN DCR/EDWS					
			M-DCP-Z-08005 (REF. DCN M-000041.						
N/A	28	07/24/12	INCORPORATED M-DCP-Z-10011 (REF. DCN M-00007) AND	APPROVALS MAINTAINED IN DCR/EDWS					
			(REF. M-DCF-Z-00381).						
N/A	29	08/23/12	INCORPORATED M-DCF-Z-00392.	APPROVALS MAINTAINED IN DCR/EDWS					
N/A	30	10/08/12	INCORPORATED J-DCF-Z-00345.	APPROVALS MAINTAINED IN DCR/EDWS					
N/A	31	02/28/13	INCORPORATED M-DCF-Z-00409.	APPROVALS MAINTAINED IN DCR/EDWS					
N/A	32	06/18/13	INCORPORATED M-DCF-Z-00407.	APPROVALS MAINTAINED IN DCR/EDWS					
N/A	33	04/15/14	INCORPORATED M-DCF-Z-00421.	APPROVALS MAINTAINED IN DCR/EDWS					
N/A	34	03/10/15	INCORPORATED M-DCF-Z-00457.	APPROVALS MAINTAINED IN DCR/EDWS					

* MT-WO-2005-00002

PROJ.	REV. NO.	DATE	REVISION	PRP'D	LEAD ENG	CHK'D	APRV'D	APRV'D	APRV'D
-	0-18	7/03/03	FOR PREVIOUS REVISIONS, SEE MICROFILM	SIGNATURES IN ORIGINAL					
S1780	19	9/15/03	AS-BUILT TU-PMT-Z-00220,-00222 & -00226)	SIGNATURES IN ORIGINAL					
S1780	20	12/29/03	CORRECTING ERROR MADE IN REV.19	SIGNATURES IN ORIGINAL					
DWPF	21	23FEB05	INCORPORATED P-DCF-Z-00031	SIGNATURES IN ORIGINAL					
*	22	08/29/05	INCORPORATED M-DCP-Z-05004 (REF DCN M-0067)	APPROV. SIGNATURES IN AIM					
N/A	23	7/12/06	REVISED CLI's	APPROV. SIGNATURES IN AIM					
N/A	24	3/29/07	INCORPORATED M-DCF-Z-00243	APPROVALS MAINTAINED IN DCR/EDWS					
N/A	25	11/17/10	INCORPORATED M-DCF-Z-00320.	APPROVALS MAINTAINED IN DCR/EDWS/MICROFILM					
N/A	26	06/24/11	INCORPORATED M-DCP-Z-08005 (REF. DCN M-00011).	APPROVALS MAINTAINED IN DCR/EDWS/MICROFILM					
			(REF. M-DCF-Z-00319 AND M-DCF-Z-00321).						

W.S. ■ ( ) - REF FILES YES NO

LEVELS 1111111111222222222333333333444444444555555555666666 123456789012345678901234567890123456789012345678901234567890123

PSC* DRAWN BY (ORIG): PLOT DATE 06/10/13 TIME 1200

LAST CADD REV. BY: R.A. KING DATE: 10/12/15

Scale shown on this drawing is only applicable when plotted at 30"x42" (actual drawing size)

THIS DRAWING HAS BEEN FURNISHED BY THE SAVANNAH RIVER SITE. THE INFORMATION AND KNOW HOW THEREON MAY NOT BE USED NOR THE DRAWING REPRODUCED WITHOUT WRITTEN PERMISSION OF THE PRIME CONTRACTOR. ALL REPRODUCTIONS IN WHOLE OR IN PART, INCLUDING VENDOR'S SHOP DRAWINGS, SHALL BEAR OR REFER TO THIS STAMP.

REFERENCE DRAWINGS

W754610	FD

REFERENCE STANDARDS

UNITED STATES DEPARTMENT OF ENERGY

SAVANNAH RIVER SITE

BLDG. NO.	SITE CLEARANCE NO.	DESIGN AREA NO.	DESIGN GROUP
210Z	N/A	Z201	PD & CS

TITLE

C B U - WASTE SOLIDIFICATION PROJECTS SALTSTONE FACILITY

PLANT & INSTRUMENT AIR DISTRIBUTION PIPING AND INSTRUMENTATION DIAGRAM (U)

SCALE	SRP DRAWING NO.	SHEET NO.	LATEST REVISION
NONE	W754642	1 OF 3	36

BEFORE

Design Change Notice (DCN) Continuation Page

DCP No.	Revision	Document No.	Revision	Project/Task No.	Revision	Page 3 of 4
M-DCP-Z-11003	1	W754642	36			
DCN No. M-DCP-Z-11003-M-00003	1	N/A				

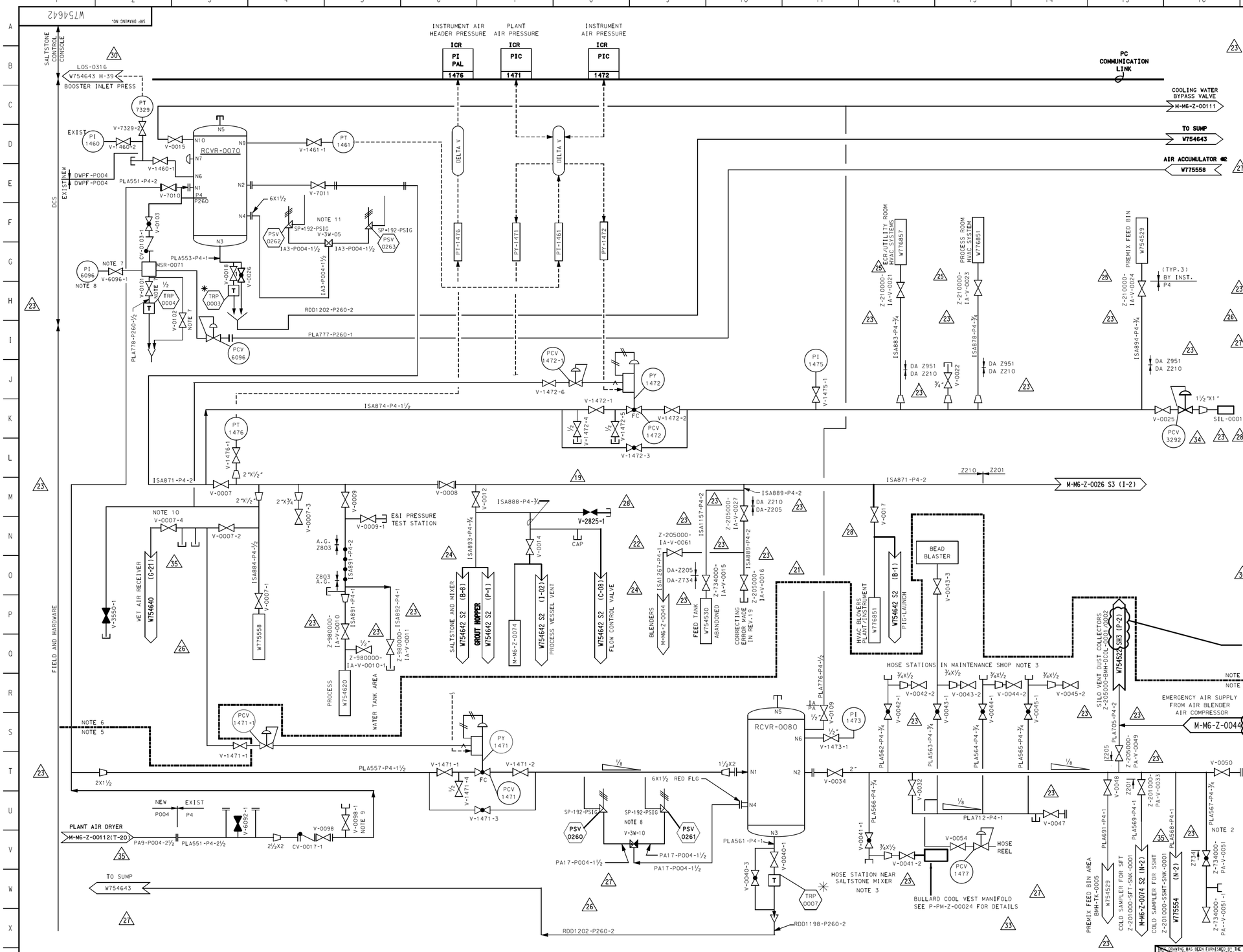

EQUIPMENT IDENTIFICATION

EQUIPMENT NUMBER	EQUIPMENT NAME	REFERENCE DRAWING	EQUIPMENT DESIGN PARAMETERS
Z-210000-PA-RCVR-0080	PLANT AIR RECEIVER	VP#MH20990-70 BPF#218364	2'6"±X6'H.C.S. 32 CU. FT.
Z-210000-PA-RCVR-0070	INSTRUMENT AIR RECEIVER	VP#MH20990-62 BPF#218364	2'6"±X6'H.C.S. 32 CU. FT.

NOTES

1. DELETED.
2. PROVIDE DRIP LEGS AT LOW POINTS OF PLANT AIR HEADER BRANCHES.
3. HOSE STATION AND HOSE RACK INSTALLTION WILL BE IN ACCORDANCE WITH DU PONT STANDARD G1M AND GAM. TAKE-OFF CONNECTION WILL BE IN ACCORDANCE WITH DU PONT STANDARD G3M.
4. HOSE CONNECTIONS SHALL BE IN ACCORDANCE WITH SPECIFICATION P25.
5. ALL COMPONENT NUMBERS WITHIN THIS BOUNDARY PREFIXED WITH Z-210000-PA-, UNLESS OTHERWISE NOTED FOR BUILDING NUMBER OR SYSTEM.
6. ALL COMPONENT NUMBERS WITHIN THIS BOUNDARY PREFIXED WITH Z-210000-IA-, UNLESS OTHERWISE NOTED FOR BUILDING NUMBER OR SYSTEM.
7. THREADED VALVE INSTALLED WITH ½" SCHEDULE 160 PIPE.
8. FABRICATE PA RECEIVER SAFETY RELIEF VALVE INLET AND DISCHARGE PIPING IN ACCORDANCE WITH M-RVD-Z-00092.
9. PORTABLE COMPRESSOR SHALL HAVE MAXIMUM PRESSURE OF 150 PSIG AT 185 CFM/4KW PER THE REQUIREMENTS OF M-RVD-N-00307.
10. INSTALL VALVE IN ACCORDANCE WITH DWPF-P004. EXAMINE AND TEST TIE-IN JOINT IN ACCORDANCE WITH WSRC-TM-95-1, STD. 15060, TABLE 5.4.2-1, OPTION NORMAL-3.
11. FABRICATE IA RECEIVER SAFETY RELIEF VALVE INLET AND DISCHARGE PIPING IN ACCORDANCE WITH M-RVD-Z-00093.
12. ALL COMPONENT NUMBERS SHOWN ON SHEETS 2 AND 3, ARE PREFIXED WITH Z-201000-IA-, UNLESS OTHERWISE NOTED FOR BUILDING NUMBER OR SYSTEM.
13. INSTRUMENT AIR SUPPLY TUBING IS FIELD RUN FROM THE ROOT VALVES SHOWN ON THIS DRAWING TO THE INSTRUMENT AIR USERS SHOWN ON THE REFERENCED PROCESS P&ID.
14. INSTRUMENT AIR SUPPLY TUBING THAT IS DENOTED AS SP202R SHALL PER T-ESR-S-00010-DWPF-SP202R AND SHALL BE INSTALLED PER MANUAL WSRC-TM-95-1 STANDARD 15980.
15. INSTRUMENT AIR DISTRIBUTION PIPING FOR THE SFT & CCBT AREAS WAS RELOCATED TO THIS P&ID FROM M-M6-Z-0074 AND M-M6-Z-0003 AS PART OF A RE-DRAFTING EFFORT FOR PROJ Y544.
16. INSTRUMENT AIR SUPPLY TUBING THAT IS DENOTED AS PS-204A SHALL PER PIPING SPECIFICATION PS-204A IN MANUAL WSRC-IM-95-58 GUIDE 15060 AND SHALL BE INSTALLED PER MANUAL WSRC-TM-95-1 STANDARD 15980.
17. PCV-8020 IS A FILTER AND REGULATOR. MCV-0001 IS A MIST LUBRICATOR. AND V-0186 IS AN ISOLATED VALVE PROVIDED BY VENDOR.

M M6 Z 0026 — SHEET 36 — REVISION

PROJ.	REV. NO.	DATE	REVISION	PRP'D	LEAD ENG	CHK'D	APRV'D	APRV'D	APRV'D
Y544	35	05/13/11	INCORPORATED M-DCP-Z-10002 (REF. DCN M-00006).	APPROVALS MAINTAINED IN DCR/EDWS					
N/A	36		INCORPORATED M-DCP-Z-12011 (REF. DCN M-00002) AND M-DCF-Z-00470.	APPROVALS MAINTAINED IN DCR/EDWS					

PROJ.	REV. NO.	DATE	REVISION	PRP'D	LEAD ENG	CHK'D	APRV'D	APRV'D	APRV'D
N/A	27	05/22/12	INCORPORATED M-DCF-Z-00353, M-DCF-Z-00357, M-DCF-Z-00364, AND	APPROVALS MAINTAINED IN DCR/EDWS					
			M-DCP-Z-08005 (REF. DCN M-000041.						
N/A	28	07/24/12	INCORPORATED M-DCP-Z-10011 (REF. DCN M-00007) AND	APPROVALS MAINTAINED IN DCR/EDWS					
			(REF. M-DCF-Z-00381).						
N/A	29	08/23/12	INCORPORATED M-DCF-Z-00392.	APPROVALS MAINTAINED IN DCR/EDWS					
N/A	30	10/08/12	INCORPORATED J-DCF-Z-00495.	APPROVALS MAINTAINED IN DCR/EDWS					
N/A	31	02/28/13	INCORPORATED M-DCF-Z-00409.	APPROVALS MAINTAINED IN DCR/EDWS					
N/A	32	06/18/13	INCORPORATED M-DCF-Z-00407.	APPROVALS MAINTAINED IN DCR/EDWS					
N/A	33	04/15/14	INCORPORATED M-DCF-Z-00421.	APPROVALS MAINTAINED IN DCR/EDWS					
N/A	34	03/10/15	INCORPORATED M-DCF-Z-00457.	APPROVALS MAINTAINED IN DCR/EDWS					

* MT-WO-2005-00002

PROJ.	REV. NO.	DATE	REVISION	PRP'D	LEAD ENG	CHK'D	APRV'D	APRV'D	APRV'D
	0-18	7/03/03	FOR PREVIOUS REVISIONS, SEE MICROFILM		SIGNATURES IN ORIGINAL				
			AS-BUILT TU-PMT-Z-00220,-00222 & -00226)		SIGNATURES IN ORIGINAL				
S1780	20	12/29/03	CORRECTING ERROR MADE IN REV.19		SIGNATURES IN ORIGINAL				
DWPF	21	23FEB05	INCORPORATED P-DCF-Z-00031		SIGNATURES IN ORIGINAL				
*	22	08/29/05	INCORPORATED M-DCP-Z-05004 (REF DCN M-0067)		APPROV. SIGNATURES IN AIM				
N/A	23	7/12/06	REVISED CLI's		APPROV. SIGNATURES IN AIM				
N/A	24	3/29/07	INCORPORATED M-DCF-Z-00243	APPROVALS MAINTAINED IN DCR/EDWS					
N/A	25	11/17/10	INCORPORATED M-DCF-Z-00320.	APPROVALS MAINTAINED IN DCR/EDWS/MICROFILM					
N/A	26	06/24/11	INCORPORATED M-DCP-Z-08005 (REF. DCN M-00011).	APPROVALS MAINTAINED IN DCR/EDWS/MICROFILM					
			(REF. M-DCF-Z-00319 AND M-DCF-Z-00321).						

W.S. ■ ( ) - REF FILES YES NO

LEVELS 1111111111222222222333333333444444444555555555666666 123456789012345678901234567890123456789012345678901234567890123

PSC* DRAWN BY (ORIG): PLOT DATE 06/10/13 TIME 1200

LAST CADD REV. BY: R.A. KING DATE: 10/12/15

Scale shown on this drawing is only applicable when plotted at 30"x42" (actual drawing size)

THIS DRAWING HAS BEEN FURNISHED BY THE SAVANNAH RIVER SITE. THE INFORMATION AND KNOW HOW THEREON MAY NOT BE USED NOR THE DRAWING REPRODUCED WITHOUT WRITTEN PERMISSION OF THE PRIME CONTRACTOR. ALL REPRODUCTIONS IN WHOLE OR IN PART, INCLUDING VENDOR'S SHOP DRAWINGS, SHALL BEAR OR REFER TO THIS STAMP.

REFERENCE DRAWINGS: W754610 FD

REFERENCE STANDARDS

UNITED STATES DEPARTMENT OF ENERGY

SAVANNAH RIVER SITE

BLDG. NO. 210Z | SITE CLEARANCE NO. N/A | DESIGN AREA NO. Z201 | DESIGN GROUP PD & CS

TITLE

C B U - WASTE SOLIDIFICATION PROJECTS SALTSTONE FACILITY

PLANT & INSTRUMENT AIR DISTRIBUTION PIPING AND INSTRUMENTATION DIAGRAM (U)

SCALE NONE | SRP DRAWING NO. W754642 | SHEET NO. 1 OF 3 | LATEST REVISION 36

AFTER

Design Change Notice (DCN) Continuation Page

DCP No.	Revision	Document No.	Revision	Project/Task No.	Revision	Page 4 of 4
M-DCP-Z-11003	1	W754642	36			
DCN No. M-DCP-Z-11003-M-00003	1	N/A				

Design Change Notice (DCN)

DCP Number	Revision	
M-DCP-Z-11003	1	
DCN No.	**Revision**	**Project/Task No**
M-DCP-Z-11003-M-00004	1	N/A

Design Change Notice (DCN)

Classification Reviewer: N/A

Date: 05/21/2019

Design Change Notice (DCN)

DCP Number	Revision
M-DCP-Z-11003	1

DCN No.	Revision	Project/Task No
M-DCP-Z-11003-M-00004	1	N/A

Document No. (Doc Rev)
M-M6-Z-0044;16

Reason for Change (Be specific)
Flexible connectors are worn and may be allowing moisture to enter the process.

Description of Change
Replace flexible connectors to prevent moisture from entering the process. Revise P&ID annotation arrows.

Engineering Approvals

Originator	Date	Responsible Engineer Manager	Date
STASIE, GARY A.	05/20/2019	SCHILLING, CHRISTOPHER A.	05/21/2019

Verifier/Checker	Date	Discipline
MASSEY, DAVID C.	05/20/2019	M-MECHANICAL

Verification Method(s)
Design Check (GS/PS only)

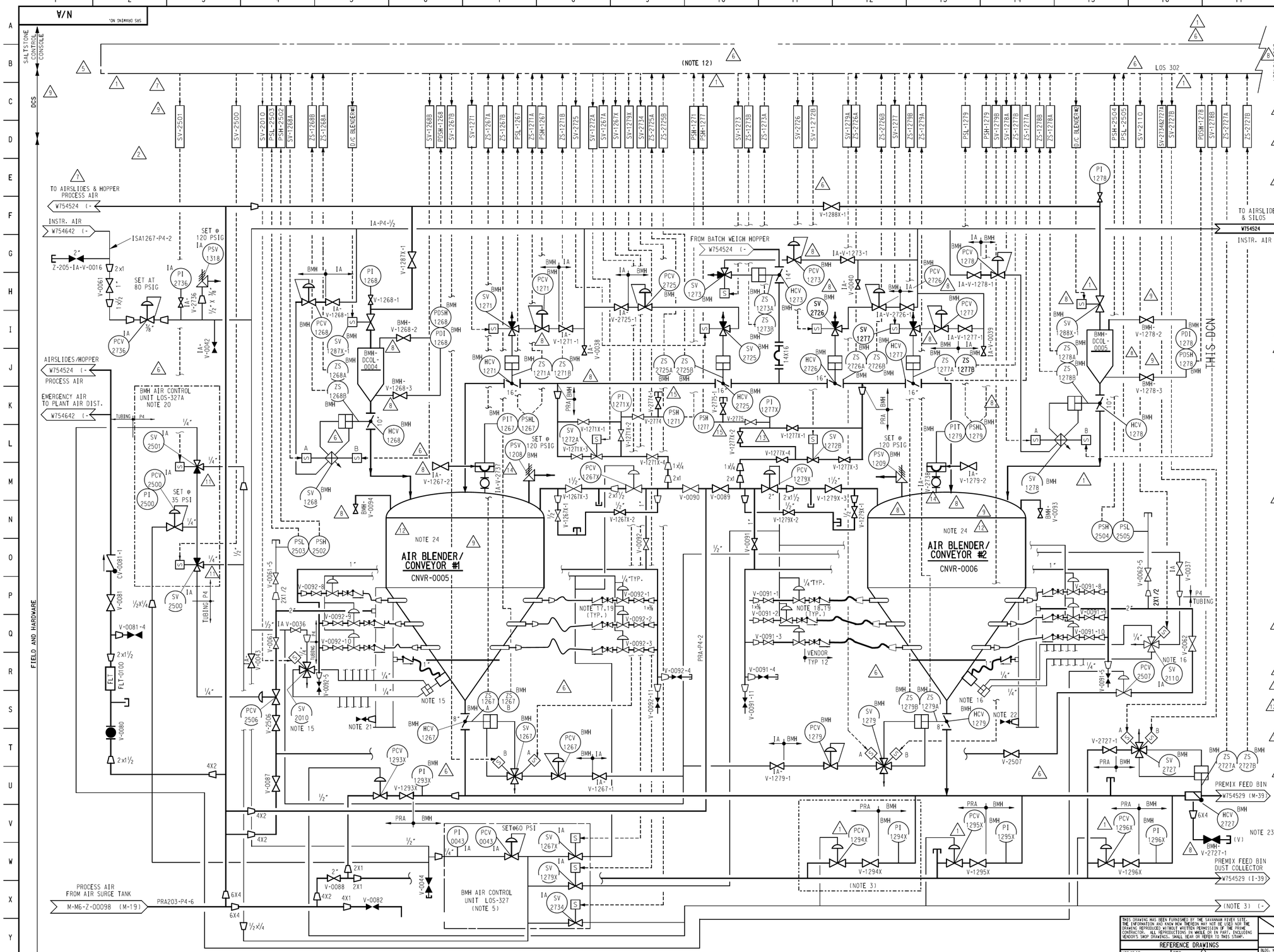

NOTES

EQUIPMENT IDENTIFICATION

EQUIPMENT NUMBER	EQUIPMENT NAME	REFERENCE DRAWING	EQUIPMENT DESIGN PARAMETERS
Z-205000-BMH-CNVR-0005	AIR BLENDER/ CONVEYOR #1	MH-21142-52(1) BPF 218582	115 CU. FT.C/S 60TPH AVE. CAP.
Z-205000-BMH-CNVR-0006	AIR BLENDER/ CONVEYOR #2	MH-21142-52(1) BPF 218582	115 CU. FT.C/S 60TPH AVE. CAP.
Z-205000-BMH-DCOL-0004/ 0005	AIR BLENDER #1, #2 DUST COLLECTOR	MH-21142-80(1) BPF 218582	265 SQ. FT. CLOTH AREA
Z-205000-BMH-LOS-0327A	LOCAL OPER. STATION LOS-327A	FIELD PURCHASE	20"x20"x8'
8			
Z-205000-BMH-LOS-0327	LOCAL OPER. STATION LOS-327	BPF 218582	24"H X 24"W
Z-205000-BMH-FLT-0100	CUNO FILTER	FIELD PURCHASE	2.125 PSIG 250° F.

NOTES

1. CAPACITY GIVEN IS THE AVERAGE COMBINED FOR BOTH BLENDERS.
2. DELETED
3. AIR INJECTION INTO PNEUMATIC CONVEYING LINE. PRESS GUAGE AND VALVES TYPICAL OF EACH OF 19 INJECTION POINTS (15 NOT SHOWN). ADDITIONAL INJECTION POINTS CONSIST OF PILOT AIR REGULATING VALVE, MANUAL VALVE AND PRESSURE INDICATOR AS SHOWN FOR "LOOPS" 1293X - 1296X. THEY ARE NUMBERED SEQUENTIALLY FROM BLENDERS TO PREMIX FEED BIN, AS "LOOPS" 1293X THRU 1311X.
4. ENTIRE CONTENTS OF THIS P&ID WITH THE EXCEPTION OF THE BUYER'S DCS IS PROVIDED IN VENDOR MATERIAL REQUISITION PACKAGE MH-21142 & AC52406A.
5. AIR CONTROL UNIT LOS-327 SUPPLIES 60 PSI INSTRUMET AIR TO PILOT REGULATORS ON EACH AIR BLENDER AND TO 19 PIPELINE AIR INJECTOR POINTS.
6. DELETED
7. ALL PIPING LESS THAN 2" TO BE SUPPLIED AND ROUTED BY SC-122.
8. FOR DETAILED SYSTEM INFORMATION, REFER TO V.P. NUMBERS MH-21142-19(1,-2,-3), -46(1), -47(1).
9. DELETED.
10. PRESSURE REGULATOR PCV-2736 TO BE PURCHASED AND INSTALLED BY WESTINGHOUSE OPERATIONS.
11. ALL COMPONENTS PREFIXED BY Z-205000-PRA-, UNLESS OTHERWISE NOTED FOR BUILDING NUMBER OR SYSTEM.
12. VALVE POSITION INDICATING LIGHTS APPEAR ON LOS-302, AND ARE HARD WIRED INDIVIDUALLY FROM LIMIT SWITCH TO LOS-302. "A" SWITCH INDICATES OPEN POSITION, AND "B" SWITCH INDICATES CLOSED POSITION. APPLICABLE TO VALVES HCV-1267, 1268, 1271, 1273, 1277, 1278, 1279, 2725 & 2726.
13. ALL PIPING, NOT OTHERWISE SPECIFIED, SHALL BE IN ACCORDANCE WITH CODE P-4, EXCEPT CONVEY PIPING WHICH SHALL BE SCH. 80. WITH VICTAULIC COUPLINGS AND WEARBACKS WHERE APPROPRIATE.
14. DELETED.
15. SIX BLENDER #1 AIR INJECTION VALVE ASSEMBLIES, HCV-2506-1 THRU HCV-2506-6 ARE CONTROLLED BY ONE SOLENOID VALVE SV-2010. EACH BLENDER VALVE AIR SUPPLY LINE HAS AN IN-LINE CHECK VALVE CV-0036A THROUGH CV-0036F
16. SIX BLENDER #2 AIR INJECTION VALVE ASSEMBLIES, HCV-2507-1 THRU HCV-2507-6 ARE CONTROLLED BY ONE SOLENOID VALVE SV-2110. EACH BLENDER VALVE AIR SUPPLY LINE HAS AN IN-LINE CHECK VALVE CV-0037A THROUGH CV-0037F.
17. BLENDER #1 AERATION AIR IS SUPPLIED BY SIX PRESSURE REGULATORS PCV-2510-1,2,3,8,9 & 10. THE REGULATORS HAVE NEEDLE VALVES V-2510-1,2,3,8,9 & 10 WITH INTEGRAL CHECK VALVES CV-2510-1,2,3,8,9 & 10.
18. BLENDER #2 AERATION AIR IS SUPPLIED BY SIX PRESSURE REGULATORS PCV-2520-1,2,3,8,9 & 10. THE REGULATORS HAVE NEEDLE VALVES V-2520-1,2,3,8,9 & 10 WITH INTEGRAL CHECK VALVES CV-2520-1,2,3,8,9 & 10.
19. EQUIPMENT TAG SEQUENCE NUMBERS TO CORRESPOND TO THE ISOLATION VALVE UPSTREAM (FOR EXAMPLE PCV-2510-1 TO CORRESPOND TO V-0092-1).
20. AIR CONTROL UNIT LOS-327A SUPPLIES INSTRUMENT AIR AT 35 PSI FOR BLENDING (SOLENOID ENERGIZED) OR 60 PSI FOR TRANSPORTING (SOLENOID DE-ENERGIZED) TO PILOT OPERATED REGULATORS PCV-2506 & PCV-2507.
21. BLENDER #1 SUPPORT COLUMNS HAVE DRAIN VALVES V-0061-1 THROUGH V-0061-4.
22. BLENDER #2 SUPPORT COLUMNS HAVE DRAIN VALVES V-0062-1 THROUGH V-0062-4.
23. HCV-2727 IS LEFT IN THE "OPERATING" POSITION AND WILL ONLY DIRECT FLOW TO THE PREMIX FEED BIN DUST COLLECTOR. DISPOSITIIONED "USE AS-IS" PER 2010-NCR-05-0024.
24. SEE M-PAR-Z-00010 FOR DETAILS ON WELD OVERLAY REPAIR ON BLENDER # 1 AND BLENDER # 2 LOCATED UNDER VESSEL NAMEPLATE.
25. SCOTCH POLYETHYLENE COATED CLOTH TAPE 390, OR ENGINEERING APPROVED EQUAL, CAN BE USED TO PROVIDE A MOISTURE INTRUSION BARRIER ON THE FLEXIBLE CONNECTIONS IN THE BMH SYSTEM.

	INPUT			OUTPUT
	1 - 5 V OR 4 - 20 mA	MILLIVOLT	PULSE	DIGITAL 120 VAC	4 - 5 V OR 4 - 20 mA	DIGITAL 120 VAC
	0	0	3	0

M M6 Z 00044 16 (REVISION)

	NUMBERS ALLOTTED	LAST NUMBER USED	NUMBERS CANCELLED
INSTRUMENT LOOP NUMBERS	2725-2739 2010-2520 1266-1285 1266X-1311X	2736 2520 1285 1311X	1266,1280,1281

PROJ.	REV. NO.	DATE	REVISION	PRP'D	LEAD ENG	CHK'D	APRV'D	APRV'D	APRV'D
N/A	16		INCORPORATED M-DCF-Z-00484.	APPROVALS MAINTAINED IN DCR/EDMS					
DWPF	6	02/22/06	INCORP. P-DCF-Z-00031		SIGNATURES ON MICROFILM				
DWPF	7	10/01/05	INCORP. M-DCP-Z-05006 (REF. DCN M-001)		APPROV. SIGNATURES IN AIM				
N/A	8	07/12/06	REVISED CLI's		APPROV. SIGNATURES IN AIM				
N/A	9	05/11/10	INCORPORATED J-DCF-Z-00394 AND J-DCP-Z-07002 (REF. DCN J005).		APPROVALS MAINTAINED IN DCR/EDMS/MICROFILM				
N/A	10	05/13/10	INCORPORATED J-DCF-Z-00406.		APPROVALS MAINTAINED IN DCR/EDMS/MICROFILM				
N/A	11	05/18/10	INCORPORATED J-DCF-Z-00403.		APPROVALS MAINTAINED IN DCR/EDMS/MICROFILM				
N/A	12	02/02/11	INCORPORATED M-DCF-Z-00317.		APPROVALS MAINTAINED IN DCR/EDMS/MICROFILM				
N/A	13	02/08/11	INCORPORATED M-DCF-Z-00329.		APPROVALS MAINTAINED IN DCR/EDMS/MICROFILM				
N/A	14	03/05/13	INCORPORATED J-DCF-Z-00489.		APPROVALS MAINTAINED IN DCR/EDMS				
N/A	15	06/10/13	INCORPORATED M-DCF-Z-00416.		APPROVALS MAINTAINED IN DCR/EDMS				

PROJ.	REV. NO.	DATE	REVISION	PRP'D	LEAD ENG	CHK'D	APRV'D	APRV'D	APRV'D
S1780	0	08/30/94	INCORPORATED M-DCF-Z-00001 INFORMATION SPLIT FROM W754524		SIGNATURES ON MICROFILM				
S1780	1	04/20/95	INCORPORATED J-DCF-Z-00013, J-DCP-Z-94002-001 AND M-DCP-Z-93002		SIGNATURES ON MICROFILM				
S1780	2	07/23/01	INC. G-DCF-Z-00012, J-DCF-Z-00017, M-DCF-Z-00014, M-DCF-Z-00042, M-DCF-Z-00058, M-DCF-Z-00068, M-DCF-Z-00102, M-DCF-Z-00107 AND M-DCP-Z-94006 (M-001) PE&CD/CM)		SIGNATURES ON MICROFILM				
N/A	3	09/09/02	INCORPORATED M-DCF-Z-00152 (PE&CD/CM)		SIGNATURES ON MICROFILM				
N/A	4	09/26/02	INCORPORATED J-DCF-Z-00185 (PE&CD/CM)		SIGNATURES ON MICROFILM				
N/A	5	03/26/03	ISSUE AS-BUILT		SIGNATURES ON MICROFILM				

W.S. = I I . REF FILES YES NO

LEVELS 1111111111222222222233333333334444444444555555555566666 1234567890123456789012345678901234567890123456789012345678901234567890123

PSC= PLOT DATE 06/10/13 TIME 1200

DRAWN BY (ORIG): K. SIMRANY LAST CADD REV. BY: R.A. KING DATE: 06/15/16

THIS DRAWING HAS BEEN FURNISHED BY THE SAVANNAH RIVER SITE. THE INFORMATION AND KNOW HOW THEREON MAY NOT BE USED NOR THE DRAWING REPRODUCED WITHOUT WRITTEN PERMISSION OF THE PRIME CONTRACTOR. ALL REPRODUCTIONS IN WHOLE OR IN PART, INCLUDING VENDOR'S SHOP DRAWINGS, SHALL BEAR OR REFER TO THIS STAMP.

REFERENCE DRAWINGS

W754540	PFD
W754524	SHEET 1 OF 2
M-M6-Z-00098	PROCESS AIR P&ID

REFERENCE STANDARDS

UNITED STATES DEPARTMENT OF ENERGY

SAVANNAH RIVER SITE

BLDG. NO.	SITE CLEARANCE NO.	DESIGN AREA NO.	DESIGN GROUP
2052	N/A	Z205	MECHANICAL

TITLE

(U) PREMIX BLENDING AND CONVEYING SYSTEM

PIPING AND INSTRUMENT DRAWING

SHEET 2 OF 2

SCALE	SRS DRAWING NO.	SHEET NO.	LATEST REVISION
NONE	N/A	1 OF 1	16

Design Change Notice (DCN) Continuation Page

DCP No.	Revision	Document No.	Revision	Page
M-DCP-Z-11003	1	M-M6-Z-0044	16	3 of 4
DCN No.	Revision	Project/Task No.		
M-DCP-Z-11003-M-00004	1	N/A		

BEFORE

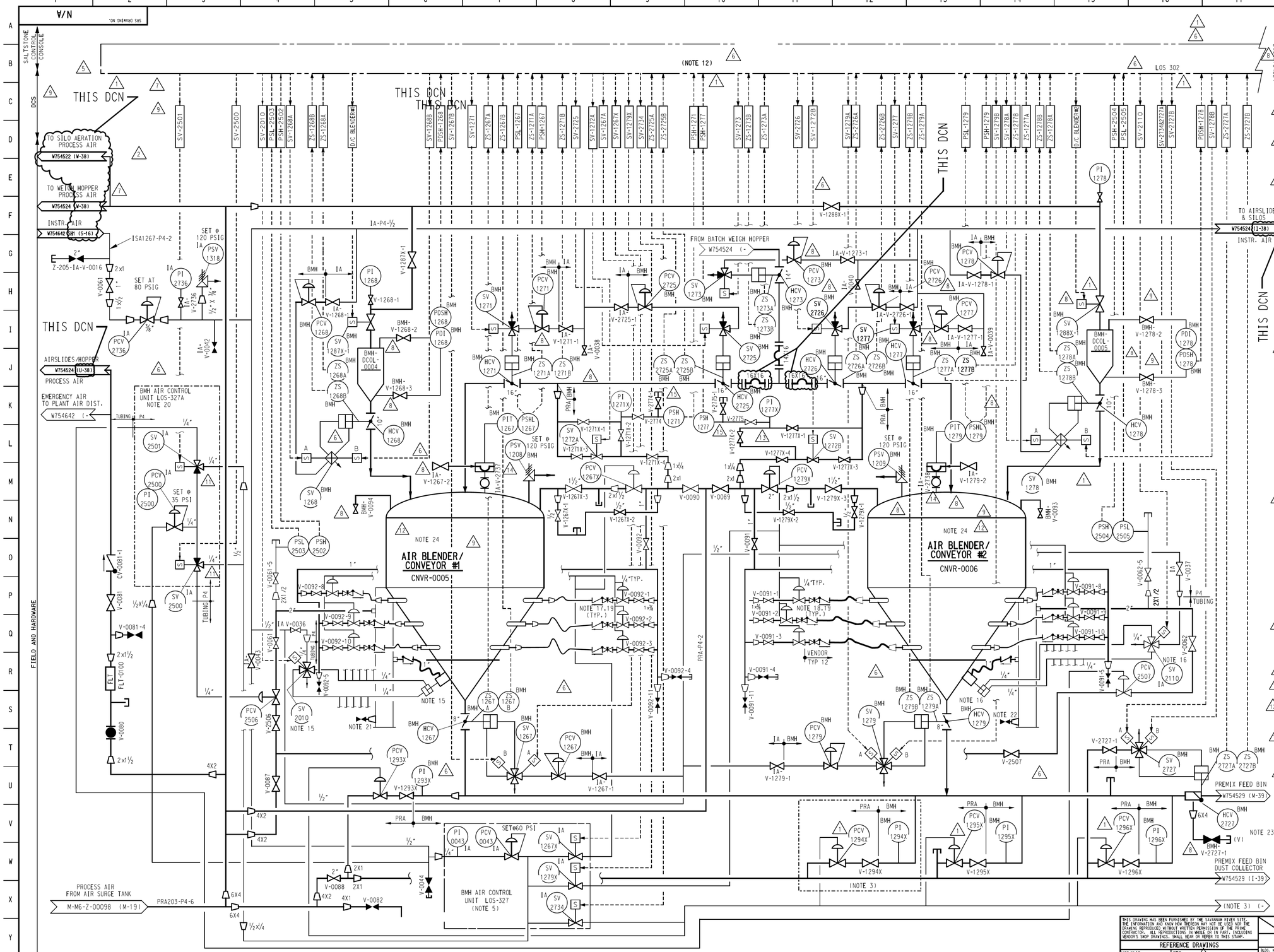

NOTES

EQUIPMENT IDENTIFICATION

EQUIPMENT NUMBER	EQUIPMENT NAME	REFERENCE DRAWING	EQUIPMENT DESIGN PARAMETERS
Z-205000-BMH-CNVR-0005	AIR BLENDER/ CONVEYOR #1	MH-21142-52(1) BPF 218582	115 CU. FT.C/S 60TPH AVE. CAP.
Z-205000-BMH-CNVR-0006	AIR BLENDER/ CONVEYOR #2	MH-21142-52(1) BPF 218582	115 CU. FT.C/S 60TPH AVE. CAP.
Z-205000-BMH-DCOL-0004/ 0005	AIR BLENDER #1, #2 DUST COLLECTOR	MH-21142-80(1) BPF 218582	265 SQ. FT. CLOTH AREA
Z-205000-BMH-LOS-0327A	LOCAL OPER. STATION LOS-327A	FIELD PURCHASE	20"x20"x8'
8			
Z-205000-BMH-LOS-0327	LOCAL OPER. STATION LOS-327	BPF 218582	24"H X 24"W
Z-205000-BMH-FLT-0100	CUNO FILTER	FIELD PURCHASE	2.125 PSIG 250° F.

NOTES

1. CAPACITY GIVEN IS THE AVERAGE COMBINED FOR BOTH BLENDERS.
2. DELETED
3. AIR INJECTION INTO PNEUMATIC CONVEYING LINE. PRESS GUAGE AND VALVES TYPICAL OF EACH OF 19 INJECTION POINTS (15 NOT SHOWN). ADDITIONAL INJECTION POINTS CONSIST OF PILOT AIR REGULATING VALVE, MANUAL VALVE AND PRESSURE INDICATOR AS SHOWN FOR "LOOPS" 1293X - 1296X. THEY ARE NUMBERED SEQUENTIALLY FROM BLENDERS TO PREMIX FEED BIN, AS "LOOPS" 1293X THRU 1311X.
4. ENTIRE CONTENTS OF THIS P&ID WITH THE EXCEPTION OF THE BUYER'S DCS IS PROVIDED IN VENDOR MATERIAL REQUISITION PACKAGE MH-21142 & AC52406A.
5. AIR CONTROL UNIT LOS-327 SUPPLIES 60 PSI INSTRUMET AIR TO PILOT REGULATORS ON EACH AIR BLENDER AND TO 19 PIPELINE AIR INJECTOR POINTS.
6. DELETED
7. ALL PIPING LESS THAN 2" TO BE SUPPLIED AND ROUTED BY SC-122.
8. FOR DETAILED SYSTEM INFORMATION, REFER TO V.P. NUMBERS MH-21142-19(1,-2,-3), -46(1), -47(1).
9. DELETED.
10. PRESSURE REGULATOR PCV-2736 TO BE PURCHASED AND INSTALLED BY WESTINGHOUSE OPERATIONS.
11. ALL COMPONENTS PREFIXED BY Z-205000-PRA-, UNLESS OTHERWISE NOTED FOR BUILDING NUMBER OR SYSTEM.
12. VALVE POSITION INDICATING LIGHTS APPEAR ON LOS-302, AND ARE HARD WIRED INDIVIDUALLY FROM LIMIT SWITCH TO LOS-302. "A" SWITCH INDICATES OPEN POSITION, AND "B" SWITCH INDICATES CLOSED POSITION. APPLICABLE TO VALVES HCV-1267, 1268, 1271, 1273, 1277, 1278, 1279, 2725 & 2726.
13. ALL PIPING, NOT OTHERWISE SPECIFIED, SHALL BE IN ACCORDANCE WITH CODE P-4, EXCEPT CONVEY PIPING WHICH SHALL BE SCH. 80, WITH VICTAULIC COUPLINGS AND WEARBACKS WHERE APPROPRIATE.
14. DELETED.
15. SIX BLENDER #1 AIR INJECTION VALVE ASSEMBLIES, HCV-2506-1 THRU HCV-2506-6 ARE CONTROLLED BY ONE SOLENOID VALVE SV-2010. EACH BLENDER VALVE AIR SUPPLY LINE HAS AN IN-LINE CHECK VALVE CV-0036A THROUGH CV-0036F
16. SIX BLENDER #2 AIR INJECTION VALVE ASSEMBLIES, HCV-2507-1 THRU HCV-2507-6 ARE CONTROLLED BY ONE SOLENOID VALVE SV-2110. EACH BLENDER VALVE AIR SUPPLY LINE HAS AN IN-LINE CHECK VALVE CV-0037A THROUGH CV-0037F.
17. BLENDER #1 AERATION AIR IS SUPPLIED BY SIX PRESSURE REGULATORS PCV-2510-1,2,3,8,9 & 10. THE REGULATORS HAVE NEEDLE VALVES V-2510-1,2,3,8,9 & 10 WITH INTEGRAL CHECK VALVES CV-2510-1,2,3,8,9 & 10.
18. BLENDER #2 AERATION AIR IS SUPPLIED BY SIX PRESSURE REGULATORS PCV-2520-1,2,3,8,9 & 10. THE REGULATORS HAVE NEEDLE VALVES V-2520-1,2,3,8,9 & 10 WITH INTEGRAL CHECK VALVES CV-2520-1,2,3,8,9 & 10.
19. EQUIPMENT TAG SEQUENCE NUMBERS TO CORRESPOND TO THE ISOLATION VALVE UPSTREAM (FOR EXAMPLE PCV-2510-1 TO CORRESPOND TO V-0092-1).
20. AIR CONTROL UNIT LOS-327A SUPPLIES INSTRUMENT AIR AT 35 PSI FOR BLENDING (SOLENOID ENERGIZED) OR 60 PSI FOR TRANSPORTING (SOLENOID DE-ENERGIZED) TO PILOT OPERATED REGULATORS PCV-2506 & PCV-2507.
21. BLENDER #1 SUPPORT COLUMNS HAVE DRAIN VALVES V-0061-1 THROUGH V-0061-4.
22. BLENDER #2 SUPPORT COLUMNS HAVE DRAIN VALVES V-0062-1 THROUGH V-0062-4.
23. HCV-2727 IS LEFT IN THE "OPERATING" POSITION AND WILL ONLY DIRECT FLOW TO THE PREMIX FEED BIN DUST COLLECTOR. DISPOSITIIONED "USE AS-IS" PER 2010-NCR-05-0024.
24. SEE M-PAR-Z-00010 FOR DETAILS ON WELD OVERLAY REPAIR ON BLENDER # 1 AND BLENDER # 2 LOCATED UNDER VESSEL NAMEPLATE.
25. SCOTCH POLYETHYLENE COATED CLOTH TAPE 390. OR ENGINEERING APPROVED EQUAL. CAN BE USED TO PROVIDE A MOISTURE INTRUSION BARRIER ON THE FLEXIBLE CONNECTIONS IN THE BMH SYSTEM.

INPUT			OUTPUT
1 - 5 V OR 4 - 20 mA	MILIVOLT	PULSE	DIGITAL 120 VAC	4 - 5 V OR 4 - 20 mA	DIGITAL 120 VAC
0	0	3	0

M M6 Z 00044 16 (LATEST REVISION)

INSTRUMENT LOOP NUMBERS	NUMBERS ALLOTTED	LAST NUMBER USED	NUMBERS CANCELLED
	2725-2739	2736	
	2010-2520	2520	
	1266-1285	1285	1266,1280,1281
	1266X-1311X	1311X	

PROJ.	REV. NO.	DATE	REVISION	PRP'D	LEAD ENG	CHK'D	APRV'D	APRV'D	APRV'D
N/A	16		INCORPORATED M-DCF-Z-00484.	APPROVALS MAINTAINED IN DCR/EDMS					
	DWFF	6	02/23/00 INCORP. P-DCF-Z-00031		SIGNATURES ON MICROFILM				
	DWFF	7	10/01/05 INCORP. M-DCP-Z-05006 (REF. DCN M-001)		APPROV. SIGNATURES IN AIM				
	N/A	8	07/12/06 REVISED CLI's		APPROV. SIGNATURES IN AIM				
	N/A	9	05/11/10 INCORPORATED J-DCF-Z-00394 AND J-DCP-Z-07002 (REF. DCN J005).		APPROVALS MAINTAINED IN DCR/EDMS/MICROFILM				
	N/A	10	05/13/10 INCORPORATED J-DCF-Z-00406.		APPROVALS MAINTAINED IN DCR/EDMS/MICROFILM				
	N/A	11	05/18/10 INCORPORATED J-DCF-Z-00403.		APPROVALS MAINTAINED IN DCR/EDMS/MICROFILM				
	N/A	12	02/02/11 INCORPORATED M-DCF-Z-00317.		APPROVALS MAINTAINED IN DCR/EDMS/MICROFILM				
	N/A	13	02/08/11 INCORPORATED M-DCF-Z-00329.		APPROVALS MAINTAINED IN DCR/EDMS/MICROFILM				
	N/A	14	03/05/13 INCORPORATED J-DCF-Z-00489.		APPROVALS MAINTAINED IN DCR/EDMS				
	N/A	15	06/10/13 INCORPORATED M-DCF-Z-00416.		APPROVALS MAINTAINED IN DCR/EDMS				

PROJ.	REV. NO.	DATE	REVISION	PRP'D	LEAD ENG	CHK'D	APRV'D	APRV'D	APRV'D
S1780	0	08/JUL/94	INCORPORATED M-DCF-Z-00001 INFORMATION SPLIT FROM W754524		SIGNATURES ON MICROFILM				
S1780	1	04/20/95	INCORPORATED J-DCF-Z-00013, J-DCP-Z-94002-001 AND M-DCP-Z-93002		SIGNATURES ON MICROFILM				
S1780	2	07/23/01	INC. G-DCF-Z-00012, J-DCF-Z-00017, M-DCF-Z-00034, M-DCF-Z-00042, M-DCF-Z-00058, M-DCF-Z-00068, M-DCF-Z-00102, M-DCF-Z-00107 AND M-DCP-Z-94006 (M-001) PE&CD/CM)		SIGNATURES ON MICROFILM				
N/A	3	09/09/02	INCORPORATED M-DCF-Z-00152 (PE&CD/CM)		SIGNATURES ON MICROFILM				
N/A	4	09/26/02	INCORPORATED J-DCF-Z-00185 (PE&CD/CM)		SIGNATURES ON MICROFILM				
N/A	5	03/26/03	ISSUE AS-BUILT		SIGNATURES ON MICROFILM				

THIS DRAWING HAS BEEN FURNISHED BY THE SAVANNAH RIVER SITE. THE INFORMATION AND KNOW HOW THEREON MAY NOT BE USED NOR THE DRAWING REPRODUCED WITHOUT WRITTEN PERMISSION OF THE PRIME CONTRACTOR. ALL REPRODUCTIONS IN WHOLE OR IN PART, INCLUDING VENDOR'S SHOP DRAWINGS, SHALL BEAR OR REFER TO THIS STAMP.

REFERENCE DRAWINGS

W754540	PFD
W754524	SHEET 1 OF 2
M-M6-Z-00098	PROCESS AIR P&ID

REFERENCE STANDARDS

UNITED STATES DEPARTMENT OF ENERGY
SAVANNAH RIVER SITE

BLDG. NO.	SITE CLEARANCE NO.	DESIGN AREA NO.	DESIGN GROUP
205Z	N/A	Z205	MECHANICAL

TITLE
(U) PREMIX BLENDING AND CONVEYING SYSTEM
PIPING AND INSTRUMENT DRAWING
SHEET 2 OF 2

SCALE	SRS DRAWING NO.	SHEET NO.	LATEST REVISION
NONE	N/A	1 OF 1	16

W.S. = I I . REF FILES YES NO
LEVELS 1111111111222222222233333333334444444444555555555566666 1234567890123456789012345678901234567890123456789012345678901234567890123
PSC= DRAWN BY (ORIG): K. SIMRANY LAST CADD REV. BY: R.A. KING
PLOT DATE 06/10/13 TIME 1200 DATE: 06/15/16

AFTER

Design Change Notice (DCN)
Continuation Page

DCP No.	DCN No.	Revision	Document No.	Revision	Project/Task No.	Page
M-DCP-Z-11003	M-DCP-Z-11003-M-00004	1	M-M6-Z-0044	16	N/A	4 of 4

SRP DRAWING NO.
N/A

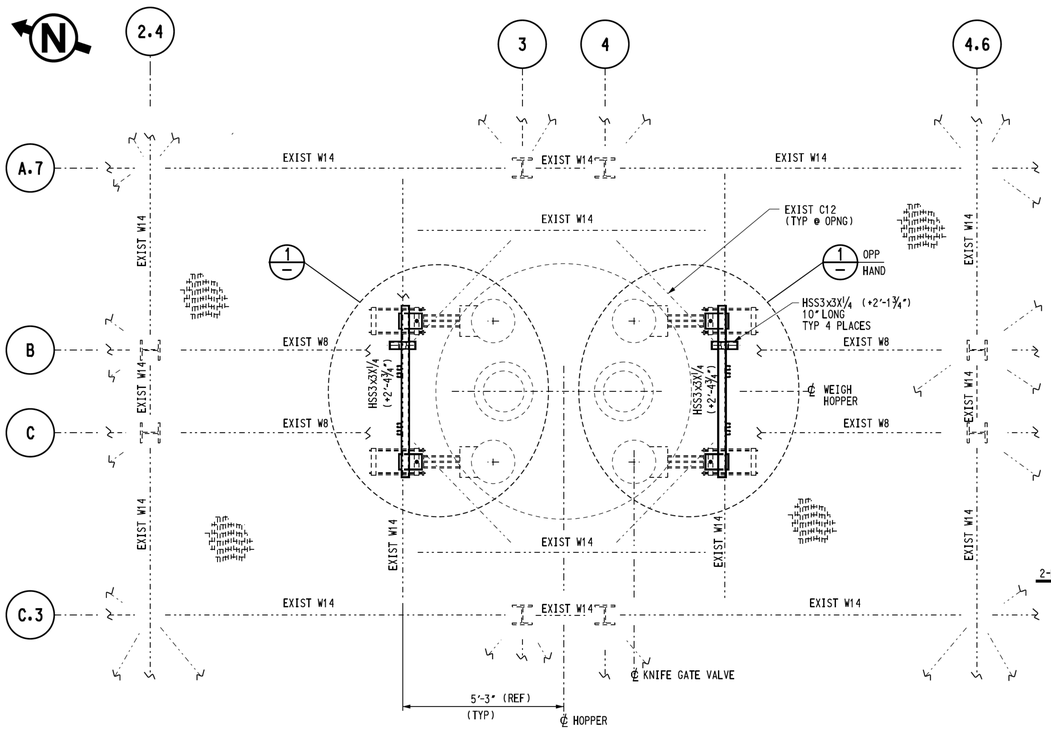

KNIFE GATE SUPPORT LOCATION PLAN VIEW AT TOS EL 319'-4 3/4" (UNO)

SCALE: 1/2"=1'-0"

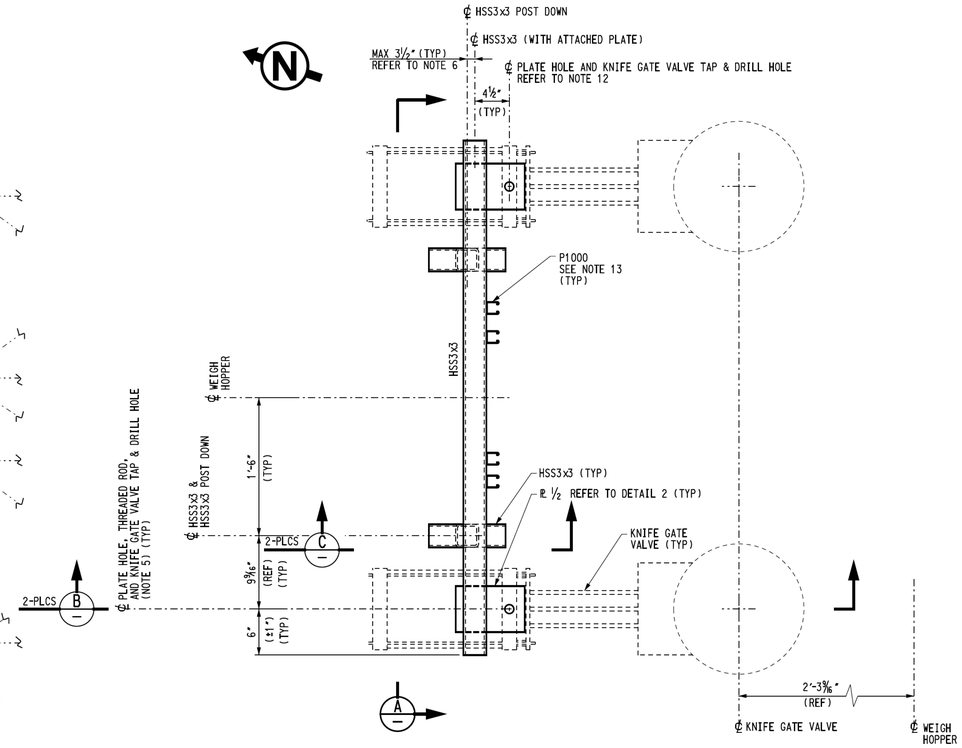

DETAIL 1

EXIST W14 NOT SHOWN FOR CLARITY

SCALE 1 1/2"=1'-0"

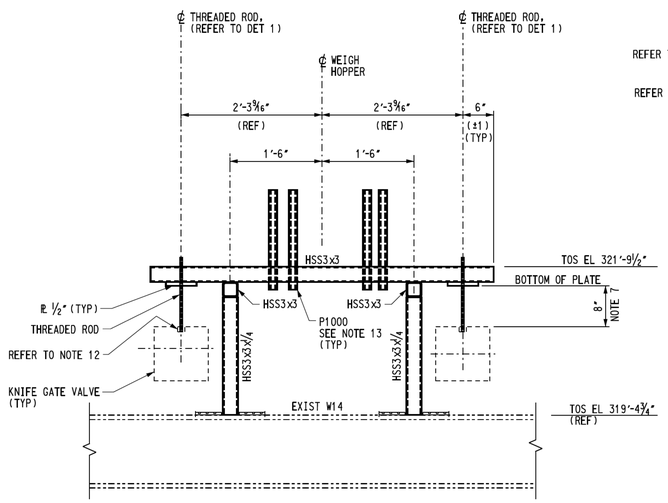

SECTION A

SCALE: 1"=1'-0"

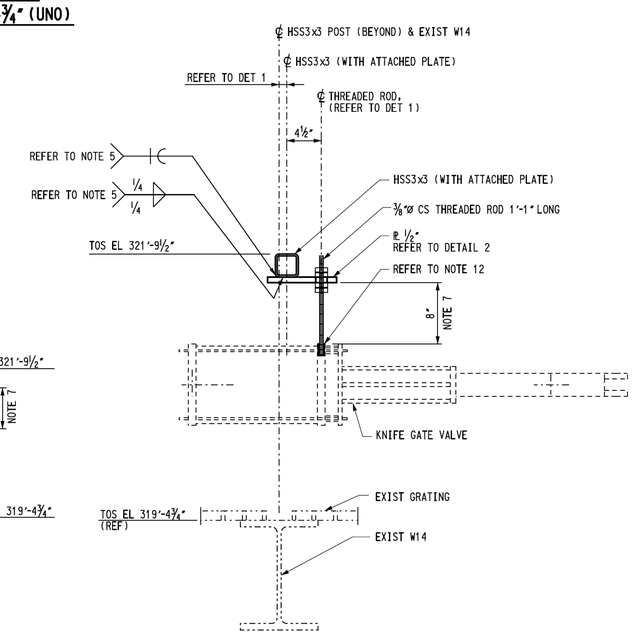

SECTION B

SCALE: 1 1/2"=1'-0"

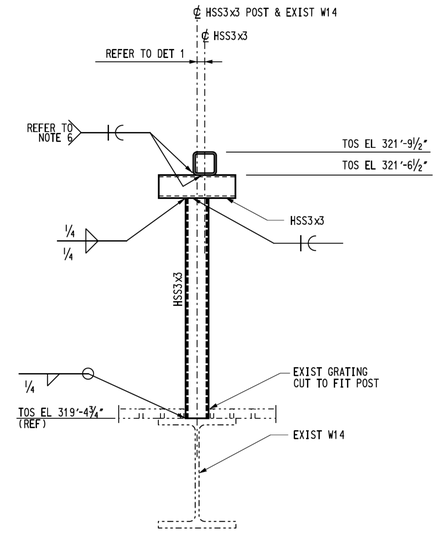

SECTION C

SCALE: 1 1/2"=1'-0"

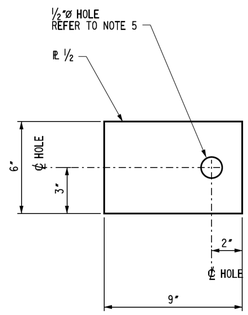

PLAN DETAIL 2

SCALE: 3"=1'-0"

NOTES

1. FOR EQUIPMENT AND INSTRUMENTS LOCATIONS SEE DRAWINGS W779821 & W779822.
2. TOLERANCE FOR BENT PLATE ELEVATION IS ±3".
   USE U-BOLT TO ATTACH PIPE ABOVE AND BELOW THE EACH FLOW INSTRUMENT, U-BOLTS TO MATCH PIPING SIZE AND SHALL BE GALVANIZED ANVIL FIG #137 OR EQUAL WITH NO GAP.
3. FUNCTIONAL CLASSIFICATION IS "PS".
4. FOR SUPPORT CALCULATIONS SEE C-CLC-Z-00082.
5. BEFORE ATTACHING PLATE TO THE HSS3x3, LOCATE ℄ PLATE HOLE TO MATCH KNIFE GATE VALVE TAP & DRILL HOLE IN EAST-WEST (EW) DIRECTION.
6. FIELD LOCATE HSS3x3 (WITH ATTACHED PLATE) SO THE ℄ OF THE PLATE HOLE MATCH KNIFE GATE VALVE TAP & DRILL HOLE IN NORTH SOUTH (NS) DIRECTION.
7. AFTER ALIGNING ℄ OF PLATE HOLE WITH KNIFE GATE VALVE TAP & DRILL HOLE IN BOTH DIRECTIONS NS AND EW, SECURE THE THREADED ROD WITH DOUBLE NUT ON TOP AND BOTTOM OF THE PLATE.
   COORDINATE SUPPORT INSTALLATION WITH KNIFE GATE VALVE MANUFACTURER'S INSTRUCTIONS.
8. ALL STEEL MEMBERS AND PLATES ARE GALVANIZED CARBON STEEL (CS). THREADED ROD/NUTS ARE CARBON STEEL (CS), USE INSULATED WASHERS BETWEEN THREADED ROD NUTS AND GALVANIZED PLATES.
9. FOR GENERAL NOTES SEE C-C1-G-00461
10. CAP PL1/8x2 3/4x0'x2 3/4" AT END OF HSS. SEAL 1/8" WELD ALL AROUND (TYP).
11. ALL FIELD LOCATED EQUIPMENT, FIELD ROUTED COMMODITIES, AND ASSOCIATED SUPPORTS SHALL MAINTAIN LIFE SAFETY/EGRESS AND MAINTENANCE/OPERABILITY AREAS AND CORRIDORS IN ACCORDANCE WITH NFPA 101-09. SPECIFICALLY, THE MINIMUM HORIZONTAL DIMENSION OF ANY WALKWAY, LANDING, OR PLATFORM OF 22" AND THE MINIMUM HEADROOM 6'-8" FROM TABLE 40.2.5.2.1 FOR INDUSTRIAL EQUIPMENT ACCESS SHALL BE MAINTAINED. THE INSTALLATION OF ALL SYSTEMS, STRUCTURES, AND COMPONENTS (SSC) SHALL MEET OSHA 29CFR1910; SSC's SHALL NOT BE ATTACHED TO HANDRAILS AND TOE PLATES.
12. TAP AND DRILL NEW HOLE PER MANUFACTURES INSTRUCTIONS. MUST HAVE MIN 3/4" THREAD ENGAGEMENT AND MAX 2" HOLE DEPTH FOR THE 3/8"Ø ROD.
13. ADD PAIR OF UNISTRUTS AT EACH LOCATION AS NEEDED TO SUPPORT ELECTRICAL/INSTRUMENT BOXES, USE UNISTRUT P1000 MAX 1'-6" LONG. ATTACH UNISTRUTS TO EITHER SIDE OF HSS3X3 BEAM USING MIN 3/16" WELD.

INTERIM DRAWING

C CP Z 00029 — LATEST REVISION B

THIS DRAWING HAS BEEN FURNISHED BY THE SAVANNAH RIVER SITE. THE INFORMATION AND KNOW HOW CONTAINED THEREON MAY NOT BE USED NOR THE DRAWING REPRODUCED WITHOUT WRITTEN PERMISSION OF THE PRIME CONTRACTOR. ALL REPRODUCTIONS IN WHOLE OR IN PART, INCLUDING VENDOR'S SHOP DRAWINGS SHALL BEAR OR REFER TO THIS STAMP.

REFERENCE DRAWINGS

W779821	PIPING ARRANGEMENT PLAN
W779822	SECTION PIPING LAYOUT
W780605	PLATFORM FRAMING PLANS
W775926	GENERAL ARRANGEMENT EQUIPMENT

REFERENCE STANDARDS

UNITED STATES DEPARTMENT OF ENERGY

SAVANNAH RIVER SITE

BLDG. NO.	SITE CLEARANCE NO.	DESIGN AREA NO.	DESIGN GROUP
205Z	N/A	Z205	SRR/DS

TITLE

SALTSTONE

SILO AND PREMIX BLENDING EQUIPMENT SUPPORT STRUCTURE ACTUATOR SUPPORT FRAMING PLAN SECTION AND DETAILS

SCALE	SRP DRAWING NO.	SHEET NO.	LATEST REVISION
AS NOTED	N/A	1 OF 2	B

The scale shown on this drawing is only applicable when plotted at 30" x 42" (actual drawing size)

PROJ.	Rev. No.	REVISION	INITIAL AND DATE: PRP'D	LEAD ENG	CHK'D/VERIF'D	APRV'D	APRV'D	APRV'D
N/A	A	INTERIM DRAWING FROM M-DCP-Z-11003 REV 0						
N/A	B	INTERIM DRAWING FROM M-DCP-Z-11003 REV 1						

APPROVALS MAINTAINED IN DCR/EDWS

SRP DRAWING NO. N/A

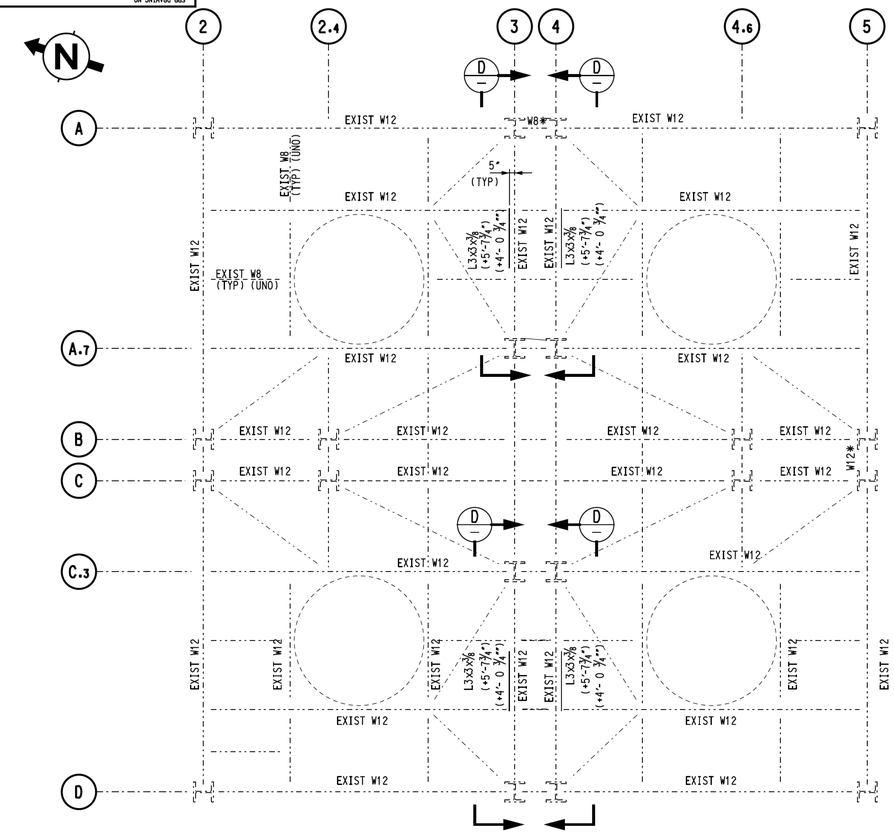

I & C PANEL SUPPORT LOCATION PLAN AT TOS EL 335'-0 1/4"

SCALE: 1/4"=1'-0"

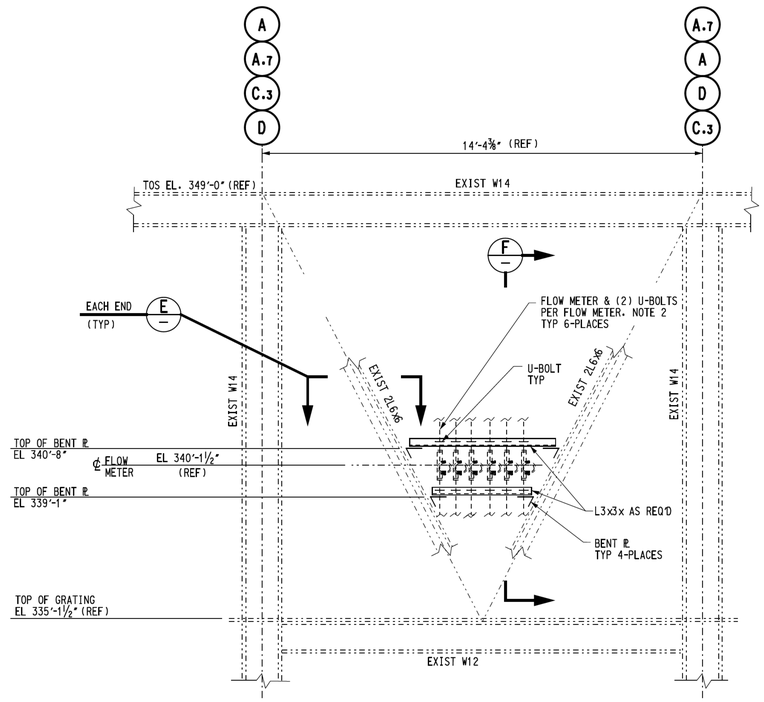

SECTION D

SCALE: 1/2" = 1'-0"

SEE PLAN FOR LOCATIONS (4 EACH)

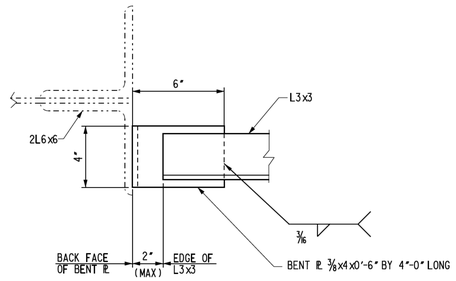

SECTION E

SCALE: 3"=1'-0"

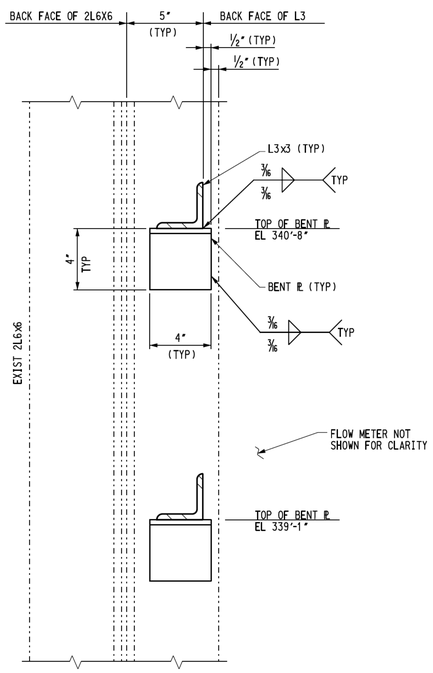

SECTION F

SCALE: 3"=1'-0"

INTERIM DRAWING

UNITED STATES DEPARTMENT OF ENERGY

SAVANNAH RIVER SITE

THIS DRAWING HAS BEEN FURNISHED BY THE SAVANNAH RIVER SITE. THE INFORMATION AND KNOW HOW THEREON MAY NOT BE USED NOR THE DRAWING REPRODUCED WITHOUT WRITTEN PERMISSION OF THE PRIME CONTRACTOR. ALL REPRODUCTIONS IN WHOLE OR IN PART, INCLUDING VENDOR'S SHOP DRAWINGS, SHALL BEAR OR REFER TO THIS STAMP.

TITLE

SALTSTONE
SILO AND PREMIX BLENDING
EQUIPMENT SUPPORT STRUCTURE
ACTUATOR SUPPORT FRAMING PLAN
SECTIONS AND DETAILS

C CP Z 00029

SRP DRAWING NO.	SHEET NO.	DRAWING REV.
N/A	2 OF 2	B

W.S. # [ ] . REF FILES YES NO

LEVELS 1111111111222222222333333333444444444555555555666666 1234567890123456789012345678901234567890123456789012345678901 23

PSC= PLOT DATE

DRAWN BY (ORIG): TIME

LAST CADD REV. BY: R.A.M. DATE: 8-7-2012

Scale shown on this drawing is only applicable when plotted at 30"x42" (actual drawing size)