DOCUMENT REVIEW/APPROVAL

Document: G-SD-Z-00005 **Revision:** 5

Document Type: SYD

Title: SYSTEM DESIGN DESCRIPTION FOR SALTSTONE HVAC

Description: Incorporated 3 DCPs and 3 DCFs plant HVAC
Updated equipment numbers to current CLI numbers

Amendments:

Originator: DAVIS, IRA ALEXANDER **Date:** 7/30/2013

REVIEW

Contributing Reviewers	Org	Date
1. N/A		7/30/2013
2. N/A		7/30/2013
3. N/A		7/30/2013
4. N/A		7/30/2013
5. N/A		7/30/2013
6. N/A		7/30/2013
7. N/A		7/30/2013
8. N/A		7/30/2013
9. N/A		7/30/2013
10. N/A		7/30/2013

APPROVAL

Approvers	Org	Date
1. N/A		9/5/2013
2. N/A		9/5/2013
3. N/A		9/5/2013
4. N/A		9/5/2013
5. N/A		9/5/2013
6. N/A		9/5/2013
7. N/A		9/5/2013
8. N/A		9/5/2013
9. N/A		9/5/2013
10. N/A		9/5/2013

VERIFIER/CHECKER

Verifier/Checker: VAUGHT, DORAN KEITH **Date:** 9/4/2013

DESIGN AUTHORITY

Design Authority: RILEY, PATRICK J **USQS Required:** YES

Date: 9/5/2013 **TRP Number:** USQ-SS-2013-00282

CLASSIFICATION

UNCLASSIFIED - Does Not Contain Unclassified Controlled Nuclear Information

DC/RO: N/A

Date: 9/5/2013

Guidance / Exemption:

When separated from the referenced document, this coversheet is : UNCLASSIFIED

G-SD-Z-00005

Revision 5

SYSTEM DESCRIPTION DOCUMENT

For

SALTSTONE HVAC

CLOSURE BUSINESS UNIT – WASTE SOLIDIFICATION PROJECTS
SALTSTONE FACILITY

Original Document (SS-12) by
Bechtel National, Inc.

5	7/9/13	Incorporated: G-DCF-Z-00014 J-DCF-Z-00259 J-DCF-Z-00312 M-DCP-Z-06003-M002 M-DCP-Z-11005-J-00004 Updated CLI numbers	IAD			
4	9/26/05	Incorporated B-DCF-00002, J-DCF-Z-00229, and J-DCF-Z-00232 and Review/Revised for Re-start	AWC	TFB	ML	PRZ
3	9/8/03	Incorporated G-DCF-Z-00012 and LCS Modifications	TDL	AGH	DCS	
2	6/5/01	Reviewed/Revised for Re-start, incorporated G-DCF-Z-00009 & X-DCF-Z-00001	TDL	JAW	AWW	
1	4/12/95	Reviewed/Revised by WSRC for Issue	TDL	HJK	RS/ JFO	SFP
0	6/16/93	Transmitted to WSRC				
Revision	Date	Description	Orig	Rvwr	Mgr	

TABLE OF CONTENTS

Section	Title	Page
	SUMMARY	1
1.0	FUNCTIONS AND DESIGN REQUIREMENTS	2
	1.1 Process and Safety Functions	2
	1.2 Design Requirements	2
	1.3 Design Basis Rationale	5
2.0	DESIGN DESCRIPTION	6
	2.1 Detailed System Description	6
	2.2 System Parameters and Performance Characteristics	8
	2.3 System Arrangement	10
	2.4 Component Design Descriptions	10
	2.5 Codes and Standards	13
	2.6 Instrumentation and Control	15
	2.7 System Interfaces	25
3.0	OPERATION	28
	3.1 Initial Configuration	28
	3.2 Startup	28
	3.3 Normal Operation	28
	3.4 Shutdown	30
	3.5 Infrequent Operation	32
4.0	SETPOINTS, SYSTEM LIMITATIONS, AND PRECAUTIONS	33
	4.1 Setpoints	33
	4.2 System Limitations and Precautions	43
5.0	SYSTEM UPSETS AND RECOVERY SEQUENCES	44
	5.1 Operations Building	44
	5.2 Process Building	45
	5.3 Fire Water Pump House	45
	5.4 Electrical Substation	46
6.0	MAINTENANCE	47
	6.1 Preventive Maintenance, Inspection, and Surveillance	47
	6.2 Corrective Maintenance	47
7.0	APPENDICES	49
	7.1 References	49
	7.2 Parameters List	50
	7.3 Drawings and Specifications	51

ILLUSTRATIONS

Figure	Title	Page
1	Operations Building (704-Z) HVAC System	48

TABLES

Table		
2.2-1	Operations Building (704-Z) Parameters	8
2.2-2	Process Building (210-Z) Parameters	9
2.4-1	Operations Building (704-Z) Component Design Descriptions	10
2.4-2	Process Building (210-Z) Component Design Descriptions	12
2.4-3	Fire Pump House (910-Z) Component Design Descriptions	13
2.4-4	Electrical Substation (951-Z) Component Design Descriptions	13
2.7-1	Saltstone HVAC Primary Interfaces – Operations Building (704-Z)	25
2.7-2	Saltstone HVAC Secondary Interfaces – Operations Building (704-Z)	25
2.7-3	Saltstone HVAC Primary Interfaces – Process Building (210-Z)	26
2.7-4	Saltstone HVAC Secondary Interfaces – Process Building (210-Z)	26
2.7-5	Saltstone HVAC Primary Interfaces – Fire Water Pump House (901-Z)	27
2.7-6	Saltstone HVAC Secondary Interfaces – Fire Water Pump House (901-Z)	27
2.7-7	Saltstone HVAC Primary Interfaces – Electrical Substation (951-Z)	27
2.7-8	Saltstone HVAC Secondary Interfaces – Electrical Substation (951-Z)	27

SUMMARY

The Saltstone Facility in Z-Area processes and disposes of radioactive salt solution from the H-Area tank farm. The salt solution consists of low-level mixed waste primarily from the Effluent Treatment Project, Low Curie Salt, Actinide Removal Project and future Salt Waste Processing Facility and Modular Caustic-Side Solvent Extraction Processing Unit. The Z-Area Saltstone Facility immobilizes the radioactive solution into a concrete-like product (saltstone) suitable for safe disposal in an aboveground vault.

This SDD covers the HVAC systems for the Operations Building (704-Z), Process Building (210-Z), Fire Pump House (901-Z), and Electrical Substation (951-Z). Its scope is limited to air handling units (AHU), air conditioning units, fans, associated duct work, dampers, HEPA filter housings, major wall louvers, exhaust stacks, makeup water interface, and controls and instrumentation.

1.0 FUNCTIONS AND DESIGN REQUIREMENTS

The Saltstone HVAC systems maintain comfortable temperatures in areas where people work, provide heating and ventilation for equipment areas, and maintain negative pressure in the regulated areas with respect to the clean areas and the atmosphere.

1.1 PROCESS AND SAFETY FUNCTIONS

The HVAC systems are broken down by building.

The Operations Building (704-Z) HVAC system maintains comfortable temperatures for personnel and protects them from exposure to contaminated air from the lab hoods by maintaining the airflow pattern from the corridor to the lab and then into the hoods.

The Process Building (210-Z) HVAC system maintains comfortable temperatures for personnel, heats and ventilates equipment areas to prevent freezing and overheating, keeps the pressure in the process area negative with respect to the atmosphere.

The Fire Water Pump House (901-Z) and Electrical Substation (951-Z) HVAC systems provide heating and ventilation to prevent equipment from freezing or overheating.

The exhaust air from regulated areas is passed through HEPA filters and monitored prior to discharge.

1.2 DESIGN REQUIREMENTS

1.2.1 Operational Requirements

- To ensure personnel comfort, the HVAC systems shall maintain a temperature range of 72°F (winter) to 80°F (summer).
- For equipment freezing and overheating protection, the HVAC systems shall maintain a temperature range of 50°F (winter) to 104°F (summer).
- In the Operations Building (704-Z), the HVAC system shall maintain the airflow direction from the corridor to the lab and then to the hoods. The face velocity at the hood opening shall be a minimum of 125 linear feet per minute. The pressure of

the regulated area shall be lower than the surroundings (BDR, Part 12, Item 100).

- In Process Building (210-Z) regulated areas, the HVAC system shall change the air eight times per hour and maintain the area at a pressure lower than that of the outside area (BDR, Part 12, Item 200).
- The HVAC systems shall filter all exhaust air from the regulated areas with HEPA filters prior to discharge to the atmosphere. Intake air shall be filtered with 50-65 percent efficiency filters (BDR, Part 12, Item 200).

1.2.2 Structural Requirements

The Operating and Process Buildings HVAC systems equipment are located on the roof of the respective buildings. The HVAC systems shall withstand a 110 mile per hour (mph) wind and meet Seismic Zone 2 requirements, as described in the 1979 edition of the Uniform Building Code (UBC). The static horizontal seismic force (F_p) applied at the center of gravity in the direction under consideration shall be as per Sec. 2312(g) of the UBC, where:

$$F_p = 0.17\ W_p$$

W_p = Dead load, or dead load plus effective live load, as applicable

1.2.3 System Configuration and Essential Features

There are no unique or special configurations or layout features required of the Saltstone HVAC systems.

1.2.4 Maintenance Requirements

- Access to the equipment and maintenance spaces shall be provided to facilitate equipment maintenance.
- The HEPA filter housings shall have provisions for in-place dioctyl phthalate (DOP) testing.
- The HEPA filter housings shall be designed so that filter banks can be isolated individually for testing and filter changeout without shutting down the exhaust system.

1.2.5 Surveillance and In-Service Inspection Requirements

- The exhaust system from the Operations Building (704-Z) lab hoods shall be monitored to ensure proper airflow rates.

- The pressure drop across supply and exhaust system filters shall be monitored regularly to determine when filters need replacement.

1.2.6 Instrumentation and Control Requirements

- Local control stations (LCSs) shall be provided for normal operations.
- Continuous filter differential pressure measurement and indication, hood exhaust airflow measurement, and regulated area pressure measurement shall be provided.
- Regulated area pressure control shall be automatic.
- The operator shall be able to start, stop, and adjust process control points and other operations required for safe, efficient process control.
- The operator shall have control from local control panels in the event of failure of the automatic mode.
- Electrical and electronic sensing and transmission shall be used whenever possible.
- Sensors, electronic components, and similar devices shall be located where they can be readily maintained.

1.2.7 System Interfacing Requirements

- G-SD-Z-00002, Saltstone Structure and Vault, supports HVAC equipment.
- G-SD-Z-00003, Saltstone Process, processes and discharges vessel air through HEPA filters into the process area HVAC exhaust stack.
- G-SD-Z-00007, Saltstone Product Lab, provides hoods that are vented to the regulated exhaust system.
- G-SD-Z-00004, Saltstone Electrical, provides normal and standby power to operate the HVAC equipment, and normal, standby, and UPS power for the control of HVAC equipment.
- G-SD-Z-00006, Saltstone Support, provides makeup process water to the HVAC chillers, vacuum system discharges to HVAC ducts, and makeup water to the humidification steam generator.
- G-SD-Z-00008, Saltstone Fire Protection, isolates Saltstone HVAC ducts in the event of Halon discharge and disables HVAC operation, as required.

1.2.8 Quality Assurance Requirements

Quality assurance requirements for SRS activities are outlined in DOE Order SR-5700.6B. The Savannah River Quality Assurance Plan, DPW 82-111-2, and the DWPF Project Quality Assurance Plan serve as the basis for quality assurance activities for the DWPF. A QA assessment program was performed for the Saltstone facilities. All systems and components were determined to be non-Q.

1.2.9 Code and Standard Requirements

The codes and standards of the following organizations are required for the Saltstone HVAC systems and equipment.

ASHRAE American Society of Heating, Refrigerating and Air-Conditioning Engineers

DOE Department of Energy Design Guide

ERDA Energy Research and Development Administration

OSHA Occupational Safety and Health Association

UBC Uniform Building Code

1.2.10 Reliability Assurance

To achieve desired system reliability, redundant equipment shall be provided for regulated area exhaust systems and standby power for regulated area exhaust fans.

1.3 DESIGN BASIS RATIONALE

This section is not applicable to this SDD. The Saltstone HVAC systems have been identified as non-Q.

2.0 DESIGN DESCRIPTION

The Saltstone HVAC systems maintain comfortable temperatures in working areas and negative pressures in regulated areas relative to atmosphere, filter exhaust air from regulated areas with HEPA filters, and heat and ventilate equipment rooms.

2.1 DETAILED SYSTEM DESCRIPTION

The Saltstone HVAC systems serve the Operations Building (704-Z), Process Building (210-Z), Fire Water Pump House (901-Z), and Electrical Substation (951-Z).

2.1.1 Operations Building (704-Z)

The Operations Building (704-Z) HVAC system is controlled from local operating stations inside the building. Building heating is by electric heating coils in the AHU or in the duct work. Cooling is by chilled-water coils inside the AHU. The HVAC system is divided into the regulated area HVAC system and the clean area HVAC system.

The regulated area HVAC system is a once-through system that supplies 100 percent outside air by an AHU, and exhausts through a HEPA filter housing and an exhaust fan (one operating, one standby), as shown in Drawing W776832. This system is used primarily for comfort control and contamination control. System alarms are annunciated in the 704-Z Electrical Control Room (ECR). The HEPA filter housing has three tiers and is sized adequately to operate with two tiers when one tier is isolated for filter changeout or testing. The HEPA filter housing is attached to a filter service gallery to contain contamination spills during filter changeout.

The clean area HVAC system includes three AHUs, two return/exhaust fans, and one toilet and kitchen exhaust fan, as shown in Drawing W776830.

A chiller supplies chilled water to the cooling coils in the AHUs, as shown in Drawing W776831. Major items or equipment include an air-cooled chiller, a centrifugal pump, an expansion tank, and an air separator.

2.1.2 Process Building (210-Z)

The Process Building (210-Z) is serviced by four separate HVAC systems which are controlled from local operating stations next to

the HVAC equipment and/or in the Central Control Room (CCR). This system also has alarms which are monitored and recorded in the CCR.

2.1.2.1 Process Area HVAC System

The process area HVAC system serves the regulated area of the Process Building (210-Z), as shown in Diagram W776850. The system includes an air supply unit with 50-65 percent efficiency filters, an electric heater, two supply fans, two HEPA filter housings, and two exhaust fans. One supply fan, one HEPA filter housing, and one exhaust fan are on standby; the standby fans will start on loss of flow from the operating fans. The system changes room air eight times per hour to ensure that potential contamination releases are removed by the HEPA filters, and provides ventilation and heating to the area. The HEPA filter housings are attached to a filter service gallery to contain contamination spills during filter changeout.

2.1.2.2 Maintenance Shop HVAC System

The maintenance shop HVAC system serves the maintenance shop, the office, the tool crib, and the storage area, as shown in Drawing W776852. The system includes a packaged air conditioning unit with economizer and electric heater, and a return/exhaust fan, and is primarily used for comfort control. An exhaust fan is also provided to remove welding fumes.

2.1.2.3 CCR/E&I Shop/Offices HVAC System

The CCR/E&I Shop/offices HVAC system serves the CCR, Electrical and Instrument (E&I) Shop, offices, and storage room, as shown in Drawings W776854 and W776855. The system includes a packaged air conditioning unit with economizer and electric heater, and electronic steam generator for humidity control (abandoned in place), and is primarily used for comfort control. The CCR also has a backup split packaged air conditioner.

2.1.2.4 ECR/Utilities Room HVAC System

The ECR/utilities room HVAC system serves the utilities facility, the ECR, and the battery room, as shown in Drawings W776857 and W776858. The system includes a two-speed AHU with moderate-efficiency filter and electric heater, and a return/exhaust fan. To conserve energy, the AHU runs at low speed in the winter (heating mode). The system provides heating and ventilation to the area and is used primarily for climate control. A wall exhauster is furnished for the battery room to prevent hydrogen buildup.

2.1.3 Fire Water Pump House (901-Z)

The Fire Water Pump House (901-Z) HVAC system includes four roof exhausters and four electric heaters, as shown in Diagram W776915. The heaters energize in sequence at low and low-low temperatures to protect equipment from freezing. The roof exhausters energize in sequence at high and high-high temperatures to protect equipment from overheating. The electric fire pump room is equipped with two back-draft dampers and the diesel fire pump room with one.

2.1.4 Electrical Substation (951-Z)

The Electrical Substation (951-Z) HVAC system includes a two-speed AHU with electric heater. The unit is controlled from a local operating station, as shown in Drawing W776870. In the winter, the AHU runs at lower speed with the heater energized to prevent freezing. In the summer, it runs at higher speed to prevent electrical equipment from overheating. To conserve energy, the AHU runs at low speed during the winter (heating mode).

2.2 SYSTEM PARAMETERS AND PERFORMANCE CHARACTERISTICS

2.2.1 Operations Building (704-Z)

The Operations Building (704-Z) HVAC system is designed to the parameters shown in Table 2.2-1.

Table 2.2-1. Operations Building (704-Z) Parameters

Area	Temperature	Pressure (atm = 0")	Airflow
Regulated	72°F minimum (winter) 80°F maximum (summer) 55% RH[a] maximum	- 0.1 in. w.g.	Once-through
Clean	72°F minimum (winter) 80°F maximum (summer)	+ 0.1 in. w.g.	Recirculated [b]
Chilled water	55°F water inlet 45°F water outlet		

(a) Relative humidity.
(b) The air from the toilets, locker, and shower rooms are once-through without recirculating.

2.2.2 Process Building (210-Z)

The Process Building (210-Z) HVAC system is designed to the parameters shown in Table 2.2-2.

Table 2.2-2. Process Building (210-Z) Parameters

Area	Temperature/RH	Pressure (atm = 0")	Airflow
Process	50°F minimum (winter) 104°F maximum (summer)	- 0.1 in. w.g.	Once-through
Maintenance	72°F minimum (winter) 80°F maximum (summer)	Slight positive [(a)]	Recirculated
CCR/E&I Shop	72°F minimum (winter) 80°F maximum (summer) 55% RH	Slight positive [(a)]	Recirculated
ECR/Utility	50°F minimum (winter) 104°F maximum (summer)	Slight positive [(a)]	Recirculated

(a) Supply air quantity is higher than return/exhaust air quantity.

2.2.3 Fire Water Pump House (901-Z)

The Fire Water Pump House (901-Z) HVAC system is designed to maintain a minimum winter temperature of 50°F and a maximum summer temperature of 104°F. When the roof exhausters run in the summer, the area will be under slight negative pressure.

2.2.4 Electrical Substation (951-Z)

The Electrical Substation (951-Z) HVAC system is designed to maintain a minimum winter temperature of 50°F and a maximum summer temperature of 104°F. When the AHU operates, the area will be under positive pressure.

2.3 SYSTEM ARRANGEMENT

All AHUs are on the roof of the building they serve, with the exception of the Electrical Substation (951-Z) AHU, which is located on grade. All HEPA filter housings and associated exhaust fans are on grade. The HEPA filter housings are equipped with a filter change gallery to contain any contamination spill during filter changeout. See Drawings W775961 through W775964 for the Process Building (210-Z) HVAC system arrangement, Drawing W775980 for the Electrical Substation (951-Z) HVAC system arrangement, and Drawing W776835 for the Operations Building (704-Z) HVAC system arrangement.

2.4 COMPONENT DESIGN DESCRIPTIONS

2.4.1 Operations Building (704-Z)

Table 2.4-1. Operations Building (704-Z) Component Design Descriptions

System	CLI (prefix Z-704000)	Equip. Name	Description
Regulated Area	HVAC-AHU-0001	AHU	Galvanized steel housing with: 4,200 cfm centrifugal fan 7.5 hp motor 282,000 Btu/hr chilled water coil Moderate-efficiency filters 40 kW Electric Heating coil Motorized fan inlet vanes Inlet louver
	HV-FLT-0004	HEPA filter housing	304L SS housing with: 6 HEPA filters (including test section) 12 prefilters (2 installed in series) 3 inlet bubble-tight isolation dampers 3 outlet bubble-tight isolation dampers Filter change gallery

Table 2.4-1. Operations Building (704-Z) Component Design Descriptions (Cont'd)

System	CLI (prefix Z-704000)	Equip. Name	Description
	HV-FAN-0005 & 0006	Exhaust fans	Centrifugal type, 4,400 cfm, 15 hp motor with motorized inlet vanes
Clean Area	HVAC-AHU-0011	AHU locker area	Galvanized steel housing with: 2,520 cfm centrifugal fan 5 hp motor 148,800 Btu/hr chilled water coil 40 kW electric heating coil Inlet louver Moderate-efficiency filter Motorized fan inlet vanes
	HVAC-FAN-0012	Return/exhaust fan lunch room area	Centrifugal type, 2,690 cfm, 5 hp motor, manual inlet vanes.
	HVAC-AHU-0013	AHU lunch room area	Galvanized steel housing with: 3,720 cfm centrifugal fan 7.5 hp motor 183,800 Btu/hr chilled water coil 30 kW electric heating coil Moderate-efficiency filter Motorized fan inlet vanes
	HVAC-AHU-0014	AHU office area	Galvanized steel housing with: 4,620 cfm centrifugal fan 7.5 hp motor 130,700 Btu/hr chilled water coil 20 kW electric heating coil Moderate-efficiency filter Motorized fan inlet vanes
	HVAC-FAN-0015	Return/exhaust fan office area	Centrifugal type, 3,670 cfm, 5 hp motor, manual inlet vanes
	HVAC-FAN-0016	Exhaust fan locker area	Centrifugal type, 4,300 cfm, 5 hp motor, manual inlet vanes
	CHW-CHU-0001	Water chiller	Air-cooled type, 80-ton capacity
	CHW-P-0001	Chilled-water pump	Centrifugal type, 180 gpm capacity, 10 hp motor
	CHW-TK-0009	Expansion tank	Steel construction, 15-gallon capacity
	CHW-SEP-0010	Air separator	Steel construction, 180 gpm capacity

See Section 7.3.3 for equipment drawing references.

2.4.2 Process Building (210-Z)

Table 2.4-2. Process Building (210-Z) Component Design Descriptions

System	CLI (prefix Z-210000)	Equip. Name	Description
Process Area	HVAC-AHU-0001	Air supply unit	Galvanized steel housing with: 6,400 cfm capacity, 65 kW electric heating coil, Moderate efficiency filters, Inlet louver
	HVAC-BLO-0001 & 0002	Supply fans	Centrifugal type, 6,400 cfm @ 2.5 in. w.g. sp, 5 hp motor
	HV-FLT-0004 & 0005	HEPA filter housings	304L SS housing with: 6 HEPA filters (include test section) 12 prefilters (2 installed in series) 1 inlet bubble-tight isolation damper 1 outlet bubble-tight isolation damper 1 common filter change gallery
Maintenance Area	HVAC-ACU-0008	Packaged AC unit	10-ton capacity, air-cooled type with: 4,600 cfm centrifugal fan, 3 hp motor 33 kW electric heater, 3.9 kW Compressor, 10 hp Economizer, Low-efficiency filter
	HVAC-FAN-0013	Return/exhaust fan	Centrifugal type, 4,000 cfm @ 0.75 in. w.g. sp, 1.5 hp motor
	HVAC-FAN-0009	Welding exhaust fan	Centrifugal type, 550 cfm @ 5 in. w.g. sp, 1.5 hp motor.
CCR/E&I Shop	HVAC-ACU-0010	Packaged ac unit	12.5-ton capacity, air-cooled type with: 4,600 cfm centrifugal fan @ 1.25 in. w.g. sp, 3 hp motor, 30 kW electric heater 2 compressors @ 6.5 hp ea. Economizer, Low efficiency filter
	HVAC-SG-0011	Steam generator	23 lb/hr capacity. (Abandoned in place)
	HVAC-COND-0020	Condenser	3-ton capacity.
	HVAC-EVP-0025	Evaporator unit	Self-contained type, 3-ton cooling capacity, 6.5 kW electric heating, 1,250/965 cfm fan, low-efficiency filter
ECR/Utility Area	HVAC-AHU-0012	AHU	Galvanized steel housing with: 15,000/7,500 cfm centrifugal fan 15 hp motor, 5 kW electric heating coil Moderate efficiency filter, Manual fan inlet vanes
	HVAC-FAN-0015	Return/exhaust fan	Centrifugal type, 2-speed, 14,300/7,150 cfm @ 1 in. w.g. sp, 7.5 hp motor.
	HVAC-EXHR-0014	Battery room exhauster	Wall-mounted, 200 cfm @ 0.1 in. w.g. sp, 1/30 hp motor

See Section 7.3.3 for equipment drawing references.

2.4.3 Fire Water Pump House (901-Z)

Table 2.4-3. Fire Water Pump House (901-Z) Component Design Descriptions

System	CLI (prefix Z-901000)	Equip. Name	Description
	HVAC-EXH-0055 & 0056	Roof exhausters	2,800 cfm @ 0.125" w.g. sp, 0.5 hp motor
	HVAC-EXHR-0057 & 0058	Roof exhausters	510 cfm @ 0.125" w.g. sp, 0.125 hp motor
	HVAC-HTR-0059 & 0060	Unit heaters	Electric type, 5 kW capacity
	HVAC-HTR-0061 & 0062	Unit heaters	Electric type, 3 kW capacity

See Section 7.3.3 for equipment drawing references.

2.4.4 Electrical Substation (951-Z)

Table 2.4-4. Electrical Substation (951-Z) Component Design Descriptions

System	CLI (prefix Z-951000)	Equip. Name	Description
	HVAC-AHU-0001	AHU	Galvanized steel housing with: Centrifugal fan, 2-speed 23,800/11,900 cfm capacity 20 kW electric heating coil Moderate-efficiency filters Outside air/return air dampers

See Section 7.3.3 for equipment drawing references.

2.5 CODES AND STANDARDS

The following codes and standards were used in the design of Saltstone HVAC systems:

AMCA American Air Movement and Control Association
99, “Standard Handbook”
201, “Fans and Systems”
210, “Laboratory Methods for Testing Fans for Ratings”

ARI American Refrigeration Institute
590, “Reciprocating Water Chiller Packages”

ASHRAE American Society of Heating, Refrigerating and Air-Conditioning Engineers
15, “Safety Code for Mechanical Refrigeration”
62, “Ventilation for Acceptable Indoor Air Quality”

DOE Department of Energy
6430.1A, “General Design Criteria”

ERDA Energy Research and Development Administration
76-21, “Nuclear Air Cleaning Handbook”

OSHA	Occupational Safety and Health Association Part 1910, “General Industry Safety and Health Regulations”
SMACNA	Sheet Metal and Air Conditioning Contractors National Association 11/75, “High Pressure Duct Construction Standards” 12/76, “Low Pressure Duct Construction Standards”
UBC	Uniform Building Code

2.6 INSTRUMENTATION AND CONTROL

2.6.1 Operations Building (704-Z)

Figure 1 shows the Operations Building (704-Z) HVAC system.

2.6.1.1 Regulated Area HVAC System

The regulated area HVAC system is shown in P&ID W776832.

This system is controlled from local control station LCS-704-1 in the ECR. The operator energizes supply and exhaust fans from HIS-1952X and HIS-1951X/1953X, respectively. The exhaust fan must be running before a supply fan can be started. Either exhaust fan may be started as the primary exhaust fan with the other exhaust fan placed in the standby mode using its associated control switch. If low flow is detected in the operating exhaust fan, the standby exhaust fan starts automatically. The regulated area corridor will be maintained at a negative pressure with reference to atmosphere and more negative with reference to the clean area. Pressure differential indicators PDI-1955X and PDI-1956X are mounted on LCS-704-1, providing pressure sensing of the atmosphere vs regulated area corridor and clean area vs regulated area corridor, respectively. On loss of differential pressure, the exhaust airflow is increased. If loss of differential pressure persists, the supply airflow is decreased until the design differential pressure is achieved.

Wall-mounted thermostat TIC-1972X located in the men's change room controls duct-mounted heater Z704-500-003-00 to maintain the room temperature. Wall-mounted thermostat TIC-1974X located in the corridor controls duct-mounted heater Z704-500-002-00 and the chilled water coil to maintain the zone temperature. Wall-mounted humidity controller MIC-1973X overcools the air to remove moisture when the room humidity is above the setpoint, and TIC-1974X reheats the supply air to raise the room temperature to within the desired range.

Filter differential pressure at Z-704-HVAC-AHU-0001 is locally monitored by pressure indicator/switch PDI/PDSH-1950X. When the pressure differential reaches a high setpoint, PDSH-1950X energizes local indicating light PDOH-1950X and sends alert signal PDOH-1959XB to LCS-704-1. An alarm is also sent to the CCR (UA1954XB).

Differential pressure across the low-efficiency prefilters is monitored by pressure indicator/switches PDI/PDSH-1957X,

PDI/PDSH-1959X, and PDI/PDSH-1961X at LOS-105, located near the HEPA filter housing. Differential pressure across the HEPA filters is monitored by pressure indicator/switches PDI/PDSH/PDSL-1958X, PDI/PDSH/PDSL-1960X, and PDI/PDSH/PDSL-1962X at LOS-105. When the pre-filter pressure differential reaches a high setpoint, the appropriate PDSH energizes local indicating light PDOH and sends alert signal PDOH to LCS-704-1 and to the CCR. When the HEPA differential pressure reaches a high setpoint, the appropriate PDSH energizes local indicating light PDOH and sends an alert signal (PDOH) to LCS-704-1 and to the CCR. If a HEPA filter rupture causes a low differential pressure, the appropriate PDSL energizes local alarm light PDAL and also sends an alarm signal (PDAL) to LCS-704-1 and to the CCR.

Airflow monitoring stations FI/FSL-1970X and FI/FSL-1971X located in the Health Protection (HP) Room and lab hood exhaust ducts**,** respectively, provide local flow indication and local and remote low flow alarms. The LCS in the HP Room displays alarm signals from hood exhaust duct low flow (FAL-1970XB and FAL-1971XB) and area low differential pressure (PDAL-1955XB and PDAL-1956XB).

2.6.1.2 Clean Area HVAC System

The clean area HVAC system is shown in P&ID W776830.

Supply and return/exhaust fans in this area are operated from LCSs located in the men's shower and locker room, conference room, and office area. Zone supply and exhaust fans are started or stopped using control switches HIS-1945X, HIS-1946X, and HIS-1947X at the associated LCS. Temperature controllers TIC-1925X, TIC-1918X, and TIC-1928X control heater and chilled water coils to maintain room temperatures. Duct-mounted air monitoring stations FIC-1940X, FIC-1941X, and FIC-1942X modulate associated AHU fan inlet vanes to maintain set airflow rates. Return/exhaust fan airflow rate is indicated at the associated air monitoring station FI-1944X, FI-1946X, or FI-1948X.

2.6.1.3 Chilled Water System

The chilled water system is shown in P&ID W776831.

This system is controlled from an LCS supplied by the system supplier and located next to the air-cooled water chiller. The chiller and the pump are started or stopped using control switches

HIS-1912X and HIS-1911X, respectively, following supplier instructions. The LCS also indicates system temperature high and low alarms. Common trouble alarm UA-1938X is indicated on the LCS. Temperature control valves (TCVs) 1935X, 1928X, 1925X, and 1918X modulate the chilled water flow to associated AHU cooling coils as required by associated room/zone temperature controllers.

The expansion tank water level is indicated by local sight level gage LG-1900X, mounted on the tank. A low level switch, LSL-1900X, is also provided and sends alarm LAL-1900X to the LCS if the water level drops below a low level setpoint. Chilled water line pressure and temperature are indicated locally by line-mounted pressure and temperature indicators, as indicated in P&ID W776831.

2.6.2 Process Building (210-Z)

2.6.2.1 Process Area HVAC System

The process area HVAC system is shown in P&IDs W776850 and W776851 and CLDs W768550 and W768551.

This system is controlled from local operating station LOS-101. The SPCS console monitors and receives alarm signals, but does not control the operation. Only one supply fan and one exhaust fan operate at any one time. When one fan fails, the standby fan will start automatically.

Supply fan Z-210-HVAC-BLO-0001 may be started, stopped, or placed in standby with HIS-1604. A supply fan may not be started unless an exhaust fan is already running. Starting supply fan Z-210-HVAC-BLO-0001 also opens discharge damper HCD-1606 and energizes SV-1604 to start vanes modulating. Duct-mounted flow station FX-1604 monitors the airflow rate, which is transmitted by FIT-1604 to LOS-101. If the airflow rate drops below the low setpoint, FSL-1604 will trigger alarm FAL-1604A at LOS-101 and alarm FAL-1604B at the SPCS console. This also automatically stops the running fan and starts the standby fan. Process area pressure is monitored relative to atmospheric pressure using differential pressure transmitter PT-1608, which is installed with static pressure probes PE-1608 and PE-1608A on its two sensing legs to ensure accurate pressure measurement. Pressure is transmitted to LOS-101 and controlled by PIC-1608 by modulating fan inlet vanes to reduce the airflow rate if the area pressure differential rises higher than a set value relative to atmosphere.

Suction damper position switch ZS-1602A inputs to LOS-101, where indicating light ZIL-1602A will go on if the suction damper is fully opened prior to starting the fan. Alarm ZA-1602A is also provided in the SPCS to alert the operator if the suction damper is not fully open. Other information provided at the SPCS console includes No Supply Fan in Standby alarm (HSA-1604B).

Supply fan Z-210-HVAC-BLO-0002 is controlled in the same manner as described above, with associated dampers, controls, and instrumentation as indicated in Drawing W776850.

Process area temperature is detected by resistance temperature detector (RTD) TE-1612, which inputs to LOS-101 where temperature controller TIC-1612 energizes the heater in air supply unit Z-210-HVAC-AHU-0001 to raise the room temperature to a minimum value. TSL-1612 triggers low-temperature alarm TAL-1612A at LOS-101 and sends alarm signal TAL-1612B to the SPCS console if the temperature is below the minimum setpoint. Local temperature switch TSH-1612X and flow detector FE/FSL-1612X monitor heater operation. If a problem is detected, common trouble switch US-1612 sends a signal to LOS-101, where heater common trouble alarm UA-1612A is actuated.

AHU filter differential pressure is monitored locally by indicator/switch PDI/PDSH-1601 in LOS-102. When the pressure differential reaches a high set value, PDSH-1601 energizes local indicating light PDOH-1601A and sends alert signal PDOH-1601B to the SPCS console.

Exhaust fan Z-210-HV-FAN-0006 may be started, stopped, or placed in standby with HIS-1618 at LOS-103. An exhaust fan cannot be started if the other exhaust fan is already running. Starting exhaust fan Z-210-HV-FAN-0006 also opens discharge damper HCD-1620 and energizes SV-1618A to start inlet vanes modulating. Duct-mounted flow station FX-1618 monitors the airflow rate, which is transmitted by FT-1618 to LOS-103, where FIC-1618 modulates fan inlet vanes as necessary to maintain a set airflow rate. If the airflow rate drops below the low setpoint, FSL-1618 alarms at the LOS-103 (FAL-1618A) and at the SPCS console (FAL-1618B). This also automatically stops the running fan and starts the standby fan. Other information provided at the SPCS console includes exhaust fan general motor failure alarm (UA-1618A), No Exhaust Fan in Standby alarm (HSA-1618B), and exhaust fan status (running or standby).

Exhaust fan Z-210-HV-FAN-0007 is controlled in the same manner as described above, with associated dampers, controls, and instrumentation, as indicated in Drawing W776851.

Exhaust fan flow is monitored by dual-insertion-type thermal flow meters FE-1626A and FE-1626B located in the duct upstream of the exhaust stack. This measurement is part of the HP monitoring system discussed in SDD G-SD-Z-00006. The averaged flow from these detectors (FI-1626) is indicated at the SPCS console in the CCR.

HEPA filter unit Z-210-HV-FLT-0004 differential pressure is monitored locally at LOS-105 across the prefilters by indicator/switch PDI/PDSH-1616A and across the HEPA filters by PDI/PDSH/PDSL-1616B. When the pre-filter pressure differential reaches a high set value, PDSH-1616A energizes local indicating light PDOH-1616A and sends an alert signal (PDOH-1616C) to the SPCS console. When the HEPA filter differential pressure reaches a high set value, PDSH-1616B energizes local indicating light PDOH-1616B and sends alert signal PDOH-1616D to the SPCS console. Upon sensing a low differential pressure (such as a HEPA filter rupture), PDSL-1616B energizes local alarm light PDAL-1616B and also sends alarm signal PDAL-1616D to the SPCS console. This alarm is activated only if an exhaust fan low flow condition does not also exist.

HEPA filter unit Z-210-HV-FLT-0005 is monitored in the same manner as described above, with associated controls and instrumentation, as indicated in Drawing W776851.

2.6.2.2 Maintenance Area HVAC System

The maintenance area HVAC system is shown in P&ID W776852.

This system is controlled by a local wall-mounted controller supplied with the HVAC equipment. Temperature controllers TIC-1636 and input to the package air conditioning unit's controller, UC-1631, which controls compressor Z-210-HVAC-CMP-0008 and heater Z-210-HVAC-HTR-0008 to maintain the room temperature. Control switches HSA-1636A and HSA-1636B located on TIC-1636, provide for running the fan only and for placing the system in the heat, automatic, cool, or off mode. Return/exhaust fan Z-210-HVAC-FAN-0013 runs when the air conditioning unit runs. The fan has a local safety disconnect switch, Z-210000-HVAC-DISC-FAN-0013. When the outside air

is cool enough, economizer TC-1645X opens the outside air damper, TCD-1646X, to supply cool air without running the compressor. Flow is monitored daily using duct-mounted airflow station FX-1632 and local flow indicator/switch FI/FSL-1632 mounted in LOS-200. LOS-106, located next to the air conditioning unit, contains filter differential pressure indicator/switch PDI/PDSH-1638. When the filter differential pressure reaches a high set value, switch PDSH-1638 activates local indicating light PDOH-1638 on the LOS. Package air conditioning unit Z-210-HVAC-ACU-0008 is supplied with its own temperature, pressure, and flow instrumentation, which monitors the operation of the unit's fan, heater, and compressor and input to unit controller UC-1631, along with input from the room controller TIC-1636.

When welding is being performed in the shop, the operator can energize exhaust fan Z-210-HVAC-FAN-0009 by using HS-1637 to remove welding fumes.

2.6.2.3 CCR/E&I Shop HVAC System

The CCR/E&I Shop HVAC system is shown in P&ID W776854 and W776855.

This system is controlled by a wall-mounted controller supplied with the HVAC equipment and located in the CCR. Temperature controller TIC-1679 and input to the package air conditioning unit's controller, UC-1661, which controls compressor Z-210-HVAC-CMP-0010 and heater Z-210-HVAC-HTR-0010 to maintain the room temperature. Control switches HSA-1679A and HSA-1679B, located on TIC-1679, provide for running the fan only and for placing the system in the heat, automatic, cool, or off mode. When the outside air is cool enough, economizer TC-1815X opens outside air damper TCD-1816X to supply cool air without running the compressor.

2.6.2.4 ECR/Utility Area HVAC System

The ECR/utility area HVAC system is shown in P&IDs W776857 and W776858 and CLDs W768553 and W768556.

AHU Z-210-HVAC-AHU-0012 and return/exhaust fan Z-210-HVAC-FAN-0015 are controlled from LCS-109, located in the ECR. Room temperature is monitored locally by RTD TE-

1713, which inputs to temperature controller TIC-1707, located at LOS-109. TIC-1707 energizes the AHU electric heater to maintain room temperature above a selected setpoint. The heater will not operate unless the supply fan is running.

The supply fan may be run at half speed or full speed, as selected by hand switch HIS-1698A. The fan is started or stopped using hand switch HIS-1698B.

Return/exhaust fan Z-210-HVAC-FAN-0015 may be started or stopped using hand switch HIS-1706, but will start only if the supply fan is running. The return/exhaust fan will run at half speed or full speed as selected for the supply fan.

Outside air intake damper HCD-1696 is set to pass 825 cubic feet per minute (cfm) of outside air in the closed position. Duct-mounted temperature detector/switch TE/TSL-1696 monitors the temperature of outside air entering the system. If the temperature is above the low set value for TSL-1696 and the supply fan is running, the system is automatically put into the exhaust mode. In this mode, SV-1704 is energized to open exhaust damper HCD-1704, SV-1705 is energized to close return damper HCD-1705, and SV-1796 is energized to open suction damper HCD-1696. If the outside air temperature falls below the setpoint for TSL-1696, the system goes into the return mode, where all solenoid valves (SVs) are de-energized, exhaust and suction dampers HCD-1704 and HCD-1696 are closed, and return damper HCD-1705 is open.

Supply airflow is monitored using duct-mounted flow station FX-1698. Flow indicator/switch FI/FSL-1698 shows local flow at LOS-202. FSL-1698 sends a low signal to LOS-109. If the supply fan is running, low flow alarm FAL-1698A is actuated at LOS-109..

Return/exhaust flow is monitored using duct-mounted flow station FX-1703. Flow indicator FI-1703 shows local flow at LOS-203.

Differential pressure across the AHU filter is monitored locally by indicator/switch PDI/PDSH-1697, located at LOS-111. If differential pressure across the filter exceeds a high set value, PDSH-1697 actuates local alert PDOH-1697A at LOS-111 and remote alert PDOH-1697B at the SPCS console in the CCR.

The AHU heater is supplied with its own flow and temperature monitoring. Any problem actuates common trouble switch OS-1700, which triggers heater common trouble alarm UA-1700A at LOS-109.

Battery room wall exhauster Z-210-HVAC-EXHR-0014 runs constantly, as indicated by a red light located outside the battery room near the door.

2.6.3 Fire Water Pump House (901-Z)

The Fire Water Pump House (901-Z) is shown in P&ID W776915 and CLD W768609.

The diesel pump room and the electric pump room are each monitored by four separate temperature controllers that sequentially turn heaters or exhausters on or off to maintain the rooms within the set temperature limits.

In the electric pump room, temperature controller TC-5122 starts roof exhauster Z-901-HVAC-EXHR-0055 at a high set temperature. If the room temperature continues to rise and reaches a high-high temperature, TC-5124 starts second roof exhauster Z-901-HVAC-EXHR-0056. The exhausters are de-energized by the controllers if the room temperature drops below the setpoints.

When the room temperature drops to a low value, TC-5123X starts unit heater Z-901-HVAC-HTR-0060. If the room temperature continues to drop to a low-low value, TC-5121X starts unit heater Z-901-HVAC-HTR-0059. The controllers de-energize the unit heaters when the room temperature rises above the setpoints.

Temperature switch TSL-5120 monitors the electric pump room temperature and actuates alarm TAL-5120 at the Saltstone process control system (SPCS) console in the CCR if the room temperature falls below a low set value.

Controls and instrumentation for the heaters in the diesel pump room are the same as described above. Controls for the exhausters are the same as above except that the exhausters are both started automatically after a set time delay when the diesel pump is running. See Drawing W776915 for associated tag numbers.

The electric pump room is equipped with two back-draft dampers and the diesel pump room is equipped with one back-draft damper.

2.6.4 Electrical Substation (951-Z)

The Electrical Substation (951-Z) is shown in P&ID W776870 and CLD W768557.

Electrical Substation (951-Z) AHU Z-951-HVAC-AHU-0001 is controlled from local operating station LOS-113. Room temperature is monitored by RTD element TE-1736, which inputs to temperature controller TIC-1736 on LOS-113. TIC-1736 is a configurable analog controller that also performs the discrete switch functions of TSH-1736, TSL-1736, and TSHL-1736. The AHU supply fan can be started (full speed only) or stopped using control switch HIS-1735 on LOS-113. With HIS-1735 in AUTO, the AHU supply fan runs at half speed unless the room temperature exceeds a high set value for TSH-1736, in which case TSH-1736 starts the AHU fan at high speed. In the ventilation mode (temperature above the setpoint for TSL-1736), temperature control damper TCD-1736 is automatically positioned with the outside air damper open and the return air damper closed. In this mode, two back-draft dampers, Z951-500-002-00 and Z951-500-003-00, open to provide relief of the supply air.

With HIS-1735 in AUTO, if the room temperature falls below a low set value, TSL-1736 automatically starts the AHU electric heater and switches the position of TCD-1736 to close the outside air damper and open the return air damper. The back-draft dampers then close to prevent the entry of outside air. In this mode, the AHU fan is directed to run at half speed. TIC-1736 controls the operation of the heater. Room temperature high-low is alarmed through TSHL-1736, which actuates local alarm TAHL-1736 on LOS-113 and inputs to common alarm UA-1734 at the SPCS. The AHU heater is supplied with its own temperature and flow monitoring. If a problem is detected by the system logic, common trouble alarm UA-1734 is actuated on LOS-113 and sent to system common alarm UA-1734 at the SPCS console.

Differential pressure across the AHU filter is monitored locally by PDI/PDSH-1733 on LOS-112 (located outside at the AHU). If the differential pressure across the filter exceeds a high set value, PDSH-1733 actuates local alert PDOH-1733 at LOS-112 and inputs to common alarm UA-1734 at the SPCS console.

Duct airflow is monitored using duct-mounted airflow station FX-1735. Local flow indicator/switch FI/FSL-1735 provides a local readout at LOS-204 (located outside at the AHU), actuates

low flow alarm FAL-1735 at LOS-113, and inputs to common alarm UA-1734 at the SPCS console.

The electrical sub-station building is equipped with two back-draft dampers.

2.7 SYSTEM INTERFACES

2.7.1 Operations Building (704-Z)

Table 2.7-1. Saltstone HVAC Primary Interfaces – Operations Building (704-Z)

Interfacing System	Interfacing Location	Requirements
G-SD-Z-00002 Saltstone Structures and Vaults	Building roof	Provide support for HVAC equipment
G-SD-Z-00004 Saltstone Electrical Power	MCC B126 MCC B124 and B123 Y164	Provide normal power to all HVAC equipment Provide normal and standby power to regulated area exhaust fans Provide standby power to HVAC control
G-SD-Z-00006 Saltstone Support	On the roof of the Operations Building (704-Z) near expansion tank	Provide makeup water to HVAC chillers
	Instrumentation	Provide instrumentation for controls

Table 2.7-2. Saltstone HVAC Secondary Interfaces – Operations Building (704-Z)

Interfacing System	Interfacing Location	Requirements
G-SD-Z-00002 Saltstone Structures and Vaults	Operations Building (704-Z) interior	Provide desired indoor conditions for the Operations Building (704-Z)
G-SD-Z-00007 Saltstone Product Laboratory	Operations Building (704-Z), Health Protection (HP) Counting Room product test laboratory	Provide exhaust for lab hoods

Table 2.7-3. Saltstone HVAC Primary Interfaces – Process Building (210-Z)

Interfacing System	Interfacing Location	Requirements
G-SD-Z-00006 Saltstone Support	Instrumentation	Provide instrumentation for controls
G-SD-Z-00004 Saltstone Electrical Power	MCC B124 and B123 Y168 and Y146	Provide normal and standby power for all HVAC equipment Provide standby and UPS power for all HVAC control
G-SD-Z-00008 Saltstone Fire Protection	CCR area	Shut down the CCR area HVAC system if the Halon system is energized

Table 2.7-4. Saltstone HVAC Secondary Interfaces – Process Building (210-Z)

Interfacing System	Interfacing Location	Requirements
G-SD-Z-00002 Saltstone Structure and Vaults	Process Building (210-Z)	Provide the desired indoor conditions
G-SD-Z-00003 Saltstone Process	Process area exhaust stack	Provide discharge path for the process vent
G-SD-Z-00006 Saltstone Support	Process area exhaust stack Various locations	Provide monitoring points for radiation

Table 2.7-5. Saltstone HVAC Primary Interfaces – Fire Water Pump House (901-Z)

Interfacing System	Interfacing Location	Requirements
G-SD-Z-00004 Saltstone Electrical Power	MCC B127 and Y300	Provide normal power to all roof exhausters and unit heaters

Table 2.7-6. Saltstone HVAC Secondary Interfaces – Fire Water Pump House (901-Z)

Interfacing System	Interfacing Location	Requirements
G-SD-Z-00002 Saltstone Structures and Vaults	Fire Water Pump House (901-Z)	Provide the desired indoor conditions

Table 2.7-7. Saltstone HVAC Primary Interfaces – Substation Building (951-Z)

Interfacing System	Interfacing Location	Requirements
G-SD-Z-00004 Saltstone Electrical Power	MCC B122 and L141	Provide normal power to the AHU, its heater, and return/exhaust fan

Table 2.7-8. Saltstone HVAC Secondary Interfaces – Substation Building (951-Z)

Interfacing System	Interfacing Location	Requirements
G-SD-Z-00002 Saltstone Structures and Vaults	Substation Building (951-Z)	Provide the desired indoor conditions

3.0 OPERATION

3.1 INITIAL CONFIGURATION

Initial configurations are indicated in the following SOPs and System Alignment Checklists (SACs) referenced in them:

- SOP 704-Z-4285, 704-Z Regulated HVAC Operation
- SOP 704-Z-4273, Operations Building (704-Z), Chilled Water System Operation
- SOP 210-Z-4280, Process Building (210-Z) HVAC Systems
- SOP 951-Z-4396, Electrical Substation Building, 951-Z, Startup/Shutdown HVAC Operation

3.2 STARTUP

See the procedures listed in Section 3.1 for startup operations.

3.3 NORMAL OPERATION

3.3.1 OPERATIONS BUILDING (704-Z)

3.3.1.1 Regulated Area HVAC System

The HVAC system is normally running and is operated from LOS-704-1, located in the ECR, as shown in Drawing W776832. The LOS consists of fan start/stop/standby controls, area differential pressure controllers and alarms, air filter differential pressure alerts and alarms, and interlocks. One exhaust fan is normally running; the other is placed in the standby mode. The supply fan is normally running. Area cooling and heating are automatically controlled by wall-mounted thermostats located in the corridor and the men's change room.

3.3.1.2 Clean Area HVAC System

Supply and return/exhaust fans in this area are manually started or placed in the automatic mode when needed. This is done using wall-mounted switches integral to thermostatic controllers located in the building, as shown in Drawing W776830. Zone thermostats automatically control the cooling and heating coils in the AHUs to maintain proper room conditions.

3.3.1.3 Chilled Water System

The chiller is normally running and is automatically controlled from its equipment-mounted LOS, as shown in Drawing W776831. The LOS consists of pump and chiller start/stop controls and alarm lights.

At the cooling coils of various air handlers, temperature control valves (TCVs) are automatically adjusted by the room thermostats to maintain set control temperature.

3.3.2 Process Building (210-Z)

3.3.2.1 Process Area HVAC System

The process area HVAC supply system normally runs continuously and is controlled from local operating station (LOS) 101, as shown in Drawings W776850 and W768550. LOS-101 consists of fan start/stop/standby switches, an area pressure indicator and controller, damper position indication, area temperature indicator/ controller, alarms and interlocks. One supply fan is normally running; the other is in standby. Automatic pressure controls modulate supply fan vanes to maintain set differential pressure. Automatic temperature control maintains the process area at the set temperature by cycling the air supply unit heater on and off.

The process area HVAC exhaust system normally runs continuously and is controlled from local operating station LOS-103, as shown in Drawings W776851 and W768551. The LOS consists of fan start/stop/standby switches, an airflow indicator/controller, damper position indication, essential alarm lights and interlocks. One exhaust fan No.1 is normally running; the other is in standby. Automatic flow control modulates the exhaust fan vanes to maintain a set exhaust flow rate.

3.3.2.2 Maintenance Area HVAC System

This system is controlled by a wall-mounted thermostat located in the maintenance shop, as shown in Drawing W776852. The system is normally operated in the automatic mode where heating, cooling and fan operation are all automatically adjusted to maintain set temperature in the maintenance area.

A local start/stop switch is placed near the welding hood for operator to energize or stop welding exhaust fan when appropriate.

3.3.2.3 CCR/E&I Shop HVAC System

This system is controlled by a wall-mounted thermostat located in the CCR as shown in Drawing W776855. The system is normally operated in the automatic mode where heating, cooling and fan operation are all automatically adjusted to maintain set temperature in the CCR/E&I shop area.

3.3.2.4 ECR/Utilities Room HVAC System

The HVAC system is controlled from local operating station LOS-109, which receives a signal from a wall-mounted thermostat located in the ECR, as shown in Drawings W776857 and W776858. The system is normally operated in the automatic mode where heating, cooling and fan operation are all automatically adjusted to maintain set temperature in the ECR/utilities room area.

The battery room exhaust fan is operated continuously, as indicated by a red light on the wall outside the room.

3.3.3 Fire Water Pump House (901-Z)

The Fire Water Pump House (901-Z) roof exhausters and heaters are controlled by individual wall-mounted RTD type temperature controllers (TCs) and start/stop switches, as shown in Drawing W776915. Normal operation is automatic with the temperature controllers set to maintain the fire pump house between the minimum and high temperature setpoints.

3.3.4 Electrical Substation (951-Z)

The AHU is controlled from LOS-113 located in the ECR, as shown in Drawing W776870. The LOS consists of fan start/auto/stop switch, area temperature switches and controller, and alarm lights. Normal operation is automatic with the AHU in the AUTO mode. In this mode, the temperature controller adjusts fan speed, damper position, and heater operation to maintain the Substation Building (951-Z) at the set temperature.

3.4 SHUTDOWN

3.4.1 Operations Building (704-Z)

3.4.1.1 Regulated Area

An operator may shut down the AHU and exhaust fans by means of a toggle switch on LOS-704. To prevent area pressurization, the AHU is de-energized before the exhaust fan.

In the automatic mode, the AHU fan will shut off automatically if the area’s negative pressure cannot be maintained even after the exhaust fan flow rate is increased.

3.4.1.2 Clean Area

An operator may shut down the AHUs and return/exhaust fans by switching hand switches at thermostatic controllers at the associated LOS to the off position.

In the automatic mode, exhaust fan Z-704000-HVAC-FAN-0016 shuts off automatically and same time as the regulated area AHU if regulated area negative pressure cannot be maintained even after the regulated area exhaust fan flow rate is increased. When the exhaust fan is shut down, AHU Z-704000-HVAC-AHU-0011 also shuts down.

3.4.1.3 Chilled Water System

An operator may shut down the chiller by ON/OFF control switch. The chiller is equipped with thermistors to provide the unit with automatic protection from (a) loss of refrigerant charge (b) reverse rotation (c) low chilled fluid temperature (d) thermal overload (e) high pressure (f) electrical overload and (g) loss of phase.

3.4.2 Process Building (210-Z)

3.4.2.1 Process Area

An operator may shut down the supply and exhaust fans by pushing stop buttons. To prevent area pressurization, the supply fan shall be de-energized before the exhaust fan. On low airflow in either the supply or exhaust system, the operating supply or exhaust fan is automatically de-energized and the standby supply or exhaust fan is started. The area pressure controller shuts down the supply fan if the area's negative pressure is not being maintained even after reducing the supply fan airflow.

3.4.2.2 Maintenance Area

An operator may shut down the air conditioning unit by pushing off buttons. The AHU also shuts down automatically on high or low compressor pressure, high bearing temperature, etc.

3.4.2.3 CCR/E&I Shop Area

An operator may shut down the air conditioning unit by pushing off buttons. The air conditioning unit also shuts down automatically on high or low compressor pressure, high bearing temperature, etc.

3.4.2.4 ECR/Utilities Room

An operator may shut down the AHU and battery room exhauster by pushing off buttons.

3.4.3 Fire Water Pump House (901-Z)

An operator may shut down the roof exhausters by pushing off buttons. The exhausters and heaters turn off automatically when the room temperature is within the setpoints.

3.4.4 Substation Building (951-Z)

An operator may shut down the AHU by pushing a stop button. The AHU turns off automatically when the room temperature is within the setpoints.

3.5 INFREQUENT OPERATIONS

The Process Building (210-Z) HVAC systems can be operated in the manual mode during maintenance or balancing and testing.

4.0 SETPOINTS, SYSTEM LIMITATIONS, AND PRECAUTIONS

4.1 SETPOINTS

The HVAC system and instrument setpoints are listed below.

4.1.1 Operations Building (704-Z)

Tag (Prefix Z-704000)	Description	Function
HV-FSL-1970X	Hood exhaust airflow low	Duct is blocked or exhaust fan problem
HV-FSL-1971X	Hood exhaust airflow low	Duct is blocked or exhaust fan problem
CHW-LSL-1900X	Expansion tank water level low	Alert operator to fill tank
HVAC-MIC-1973X	Corridor relative humidity indicator/controller	Overcool area temperature to remove moisture by opening TCV-1935X
HVAC-PDSH-1950X	Air handling unit filter differential pressure high	Filter dirty and needs replacement
HV-PDSH-1957X	Pre-filter differential pressure high	Filter dirty and needs replacement
HV-PDSH-1958X	HEPA filter differential pressure high	Filter dirty and needs replacement
HV-PDSH-1959X	Pre-filter differential pressure high	Filter dirty and needs replacement
HV-PDSH-1960X	HEPA filter differential pressure high	Filter dirty and needs replacement
HV-PDSH-1961X	Pre-filter differential pressure high	Filter dirty and needs replacement
HV-PDSH-1962X	HEPA filter differential pressure high	Filter dirty and needs replacement
HVAC-PDSL-1955X	Area pressure differential pressure low	Air lock doors opened, supply airflow high, exhaust airflow low, or exhaust filter pluggage.

Tag (Prefix Z-704000)	Description	Function
HVAC-PDSL-1956X	Area pressure differential pressure low	Air lock doors opened, supply airflow high, exhaust airflow low, or exhaust filter pluggage.
HV-PDSL-1958X	HEPA filter differential pressure low	Filter may be ruptured
HV-PDSL-1960X	HEPA filter differential pressure low	Filter may be ruptured
HV-PDSL-1962X	HEPA filter differential pressure low	Filter may be ruptured
HVAC-TIC-1918X	Corridor temperature indicator/AHU heater/AHU cooling coil controller	Modulate AHU heater and cooling coil valve TCV-1918X to maintain desired area temperature range
HVAC-TIC-1925X	Men's shower and locker room temperature indicator/AHU heater/ AHU cooling coil controller	Modulate AHU heater and cooling coil valve TCV-1925X to maintain desired area temperature range
CHW-PSH-1938XA	Chiller Freon pressure high (circuit 1)	Problem with chiller
HVAC-TIC-1928X	Conference room temperature indicator/AHU heater/AHU cooling coil controller	Modulate AHU heater and cooling coil valve TCV-1928X to maintain desired area temperature range
CHW-PSH-1938XB	Chiller Freon pressure high (circuit 2)	Problem with chiller
*TIC-1972X	Men's change room temperature indicator/duct heater controller	Control duct heater to maintain minimum desired area temperature
CHW-PSH-1939XA	Chiller oil pressure high (circuit 1)	Problem with chiller

Tag (Prefix Z-704000)	Description	Function
HVAC-TIC-1974X	Corridor temperature indicator/duct heater/AHU cooling coil controller	Modulate AHU cooling coil valve TCV-1935X and duct heater to maintain desired area temperature range
CHW-PSH-1939XB	Chiller oil pressure high (circuit 2)	Problem with chiller
CHW-TSH-1980X	Chilled-water temperature high	Problem with chiller
CHW-PSL-1915X	Evaporator pressure low	Problem with chiller
CHW-TSL-1981X	Chilled-water temperature low	Problem with chiller
CHW-PSL-1938XA	Chiller Freon pressure low (circuit 1)	Problem with chiller
CHW-PSL-1938XB	Chiller Freon pressure low (circuit 2)	Problem with chiller
CHW-PSL-1939XA	Chiller oil pressure low (circuit 2)	Problem with chiller
CHW-PSL-1939XB	Chiller oil pressure low (circuit 2)	Problem with chiller
TIC-1914X	Chilled water temperature indicator/controller	Control chiller compressor to maintain desired chilled water temperature
CHW-TIC-1918X	Corridor temperature indicator/AHU heater/AHU cooling coil controller	Modulate AHU heater and cooling coil valve TCV-1918X to maintain desired area temperature range
HVAC-TIC-1925X	Men’s shower and locker room temperature indicator/AHU heater/ AHU cooling coil controller	Modulate AHU heater and cooling coil valve TCV-1925X to maintain desired area temperature range

Tag (Prefix Z-704000)	Description	Function
HVAC-TIC-1928X	Conference room temperature indicator/AHU heater/AHU cooling coil controller	Modulate AHU heater and cooling coil valve TCV-1928X to maintain desired area temperature range
*TIC-1972X	Men's change room temperature indicator/duct heater controller	Control duct heater to maintain minimum desired area temperature
*TSH-1914X	Chilled-water temperature high	Problem with chiller
*TSL-1914X	Chilled-water temperature low	Problem with chiller

4.1.2 Process Building (210-Z)

Tag (Prefix Z210)	Description	Function
HV-FIC-1618	Exhaust fan #1 flow indicator/controller	Modulate fan inlet vanes (FCD-1618) to achieve desired airflow
HV-FIC-1624	Exhaust fan #2 flow indicator/controller	Modulate fan inlet vanes (FCD-1624) to achieve desired airflow
HVAC-FSL-1604	Supply fan #1 airflow low	Fan malfunction
HVAC-FSL-1608	Supply fan #2 airflow low	Fan malfunction
HVAC-FSL-1612X	Airflow low	Prevent heater from energizing when there is no airflow to prevent heater overheat
HV-FSL-1618	Exhaust fan #1 airflow low	Fan malfunction
HV-FSL-1624	Exhaust fan #2 airflow low	Fan malfunction
HVAC-FSL-1632	Airflow low	Air conditioning unit fan malfunctioned
HVAC-FSL-1644X	Airflow low	Prevent heater from energizing when there is no air flow
HVAC-FSL-1662	Airflow low	Air conditioning unit fan malfunctioning
HVAC-FSL-1698	ECR/Utility facility AHU airflow low	AHU fan malfunction
HVAC-FSL-1700X	ECR/Utility facility AHU heater airflow low	Prevent heater from energizing when there is no flow
HVAC-FSL-1814X	Airflow low	Heater de-energized to prevent heater overheat

Tag (Prefix Z210)	Description	Function
HVAC-LSH-1823X	CCR/E&I shop steam generator water level high	Shut off supply water
HVAC-PDSH-1601	Filter differential pressure high	Filter dirty and needs replacement
HV-PDSH-1616A	Pre-filter differential pressure high	Filter dirty and needs replacement
HV-PDSH-1616B	HEPA filter differential pressure high	Filter dirty and needs replacement
HV-PDSH-1622A	Pre-filter differential pressure high	Filter dirty and needs replacement
HV-PDSH-1622B	HEPA filter differential pressure high	Filter dirty and needs replacement
HVAC-PDSH-1664	Filter differential pressure high	Filter dirty and needs replacement
HVAC-PDSH-1697	AHU filter pressure differential high	Filter dirty, need replacement
HV-PDSL-1616B	HEPA filter differential pressure low	Filter may be ruptured
HV-PDSL-1622B	HEPA filter differential pressure low	Filter may be ruptured
HVAC-PIC-1604	Supply fan #1 flow indicator/controller	Modulate fan inlet vanes (FCD-1604) to achieve desired room pressure

Tag (Prefix Z210)	Description	Function
HVAC-PIC-1608	Supply fan #2 flow indicator/controller	Modulate fan inlet vanes (FCD-1608) to achieve desired room pressure
HVAC-PSH-1812X A & B	Compressor pressure high	Problem with compressor
HVAC-PSL-1811X A&B	Compressor pressure low	Problem with compressor
HVAC-TC-1645X	Maintenance shop economizer controller	Open outside air damper when outside air enthalpy is lower than inside
HVAC-TC-1815X	CCR air handling unit economizer controller	Open outside air damper when outside air enthalpy is lower than inside
HVAC-TIC-1612	Process area indicator/controller	Control AHU heater to maintain minimum area temperature
HVAC-TIC-1636	Maintenance shop temperature indicator/controller	Control AHU heater/compressor to maintain room temperature above within desired range
HVAC-TIC-1679	CCR area temperature indicator/controller	Control air handling unit cooling and heating coil
HVAC-TSH-1612X	Heater temperature high	Heater may be malfunctioning

Tag (Prefix Z210)	Description	Function
HVAC-TSH-1669	Room temperature high	Alert operator that room temperature exceeds desired condition
HVAC-TSH-1700X	ECR/Utility facility AHU heater temperature high	AHU heater malfunction
HVAC-TSL-1612 HVAC-TSHH-1643X	Process area temperature lowHeater temperature high high	Area temperature drops below desired level Heater may be malfunctioning
*TSL-1640X HVAC-TSHH-1813X	Compressor temperature high Heater temperature high-high	Compressor problem Heater may be malfunctioning
HVAC-UC-1631 HVAC-TSL-1612	Maintenance shop AHU master controller Process area temperature low	Control heating/cooling operation of the AHUArea temperature drops below desired level
HVAC-UC-1661 *TSL-1640X	CCR air handling unit master controller Compressor temperature high	Control heating/cooling operation of the AHUCompressor problem
HVAC-UC-1631	Maintenance shop AHU master controller	Control heating/cooling operation of the AHU
HVAC-UC-1661	CCR air handling unit master controller	Control heating/cooling operation of the AHU

4.1.3 Fire Water Pump House (901-Z)

Tag (Prefix Z901)	Description	Function
*SC-5122X	Roof exhauster Z901-100-055-00 speed controller	Operator to set at high or low speed as desired
HVAC-SC-5124X	Roof exhauster Z901-100-056-00 speed controller	Operator to set at high or low speed as desired
HVAC-SC-5126X	Roof exhauster Z901-100-057-00 speed controller	Operator to set at high or low speed as desired
HVAC-SC-5128X	Roof exhauster Z901-100-058-00 speed controller	Operator to set at high or low speed as desired
HVAC-TC-5121X	Room heater controller	Energize heater Z901-100-059-00
HVAC-TC-5122	Roof exhauster controller	Energize roof exhauster Z901-100-055-00
HVAC-TC-5123X	Room heater controller	Energize heater Z901-100-060-00
HVAC-TC-5124	Roof exhauster controller	Energize roof exhauster Z901-100-056-00
HVAC-TC-5125X	Room heater controller	Energize heater Z901-100-061-00
HVAC-TC-5126	Roof exhauster controller	Energize roof exhauster Z901-100-057-00
HVAC-TC-5127X	Room heater controller	Energize heater Z901-100-062-00
HVAC-TC-5128	Roof exhauster controller	Energize roof exhauster Z901-100-058-00
HVAC-TSL-5120	Room temperature low	Alert operator that room temperature is reaching low limit
HVAC-TSL-5129	Room temperature low	Alert operator that room temperature is reaching low limit

4.1.4 Substation Building (951-Z)

Tag (Prefix Z951)	Description	Function
HVAC-FSL-1734X	Air handling unit low flow	Prevent heater from energizing
HVAC-FSL-1735	Fan airflow low	Air handling unit fan malfunction
HVAC-PDSH-1733	Air handling unit filter differential pressure high	Filter dirty and needs replacement
HVAC-TIC-1736	Room temperature indicating/controller	Control room temperature
HVAC-TSH-1734X	Air handling unit heater temperature high	Heater malfunctioned
HVAC-TSH-1736	Room temperature high	Run fan at high speed
HVAC-TSHL-1736	Room temperature high-low	Alert operator that room temperature is outside of desired range.
HVAC-TSL-1736	Room temperature low	Run fan at low speed

*Not found in SmartPlant

See Saltstone Instrument Index for additional instrument information. Instrument type and ranges are listed on the Instrument Index.

4.2 SYSTEM LIMITATIONS AND PRECAUTIONS

The procedure for changing setpoints is described in the appropriate SOP. Alarms and interlocks are described in Section 3.3.

In the regulated areas of the Operations Building (704-Z) and the Process Building (210-Z), opening both doors of the air locks may upset the desired pressure differentials. If this occurs, the operator needs to check all doors to ensure that they are closed. Since door seals may deteriorate with age, the operator needs to check them periodically.

During HEPA filter changeout, the operator needs to ensure that the bubble-tight isolation dampers are properly closed to completely isolate the filter banks from the system. After new HEPA filters have been installed, DOP testing is required.

5.0 SYSTEM UPSETS AND RECOVERY SEQUENCES

5.1 OPERATIONS BUILDING (704-Z)

5.1.1 Exhaust Fan Failure

A failure of the on-line exhaust fan in the regulated area may result in pressurization of this area. Potentially contaminated air might migrate to the clean area. If this exhaust fan fails, the standby exhaust fan starts to maintain the desired area differential pressure.

Both of these exhaust fans are connected to standby power and continue to operate during loss of normal power. If the area loses its differential pressure, alarms PDAL-1955XA and 1956XA appear at LCS-704-1, and PDAL-1955XB and 1956XA appear in the health protection office.

The switchover from operating to standby fan is done automatically. If loss of area differential pressure persists, the operator needs to inspect the whole system to determine the cause. The checkout procedures are identified in SOP 704-Z-4285.

5.1.2 HEPA Filter Rupture or Pluggage

HEPA filters in the regulated exhaust system remove potentially contaminated particulates from the air prior to discharge to atmosphere. HEPA filters may rupture because of moisture and high pressure differential. Dirty filters will reduce the exhaust airflow rate and upset the air balance of the supply and exhaust system.

Differential pressure alarms are installed across each HEPA filter bank as noted earlier.

When a high or low differential pressure alarm occurs, the operator needs to close the dampers across the filter bank with the problem to replace the filters. After filter replacement, a DOP test is required to ensure proper filter installation.

5.1.3 Water Chiller Failure

Chiller failure will result in uncomfortable conditions for workers in the affected area and could render temperature-sensitive instrumentation nonfunctional. If the chiller fails, a chiller common alarm is sent to LCS-10.

The operator needs to inspect the chiller problem and repair as required.

5.2 PROCESS BUILDING (210-Z)

5.2.1 Exhaust Fan Failure

The failure modes in the process area exhaust fans are identical to the Operations Building (704-Z) regulated area and therefore are not described here.

5.2.2 HEPA Filter Rupture or Pluggage

The failure modes in the process area HEPA filters are identical to the Operations Building (704-Z) regulated area and therefore are not described here. However, the process area exhaust system has two HEPA filter housings, one of which is normally isolated from the system by the dampers.

5.2.3 CCR/E&I Shop Air Handling Unit Failure

The AHU for this area provides comfort conditioning for personnel and temperature control for delicate SPCS console. AHU failure may result in shutdown of the SPCS console and disrupt the Saltstone process.

A backup air conditioning unit is furnished for the CCR to ensure proper environmental conditions in the event of AHU mechanical failure. A common trouble alarm for the AHU is sent to the SPCS console.

The operator starts the backup air conditioning unit manually. The failed AHU needs to be checked and repaired as required.

5.3 Fire water Pump House (901-Z)

5.3.1 Roof Exhauster Failure

Roof exhauster failure may cause the room to overheat. This may affect electrical equipment and instrumentation.

The room high temperature alarm is indicated on the SPCS console. If one exhauster fails, the operator should check to see if the other exhauster is running; if it is not, it should be started.

During exhauster repair, opening the doors or providing a portable fan to ventilate the room may be necessary.

5.3.2 Heater Failure

Heater failure may result in freezing. Pipes might break, and equipment may become inoperable.

The room low temperature alarm is indicated in the SPCS console. With a failed heater, the operator should check that the other heater is on; if it is not, it should be energized.

During heater repair, a portable heater may be necessary.

5.4 Electrical Substation (951-Z)

5.4.1 Air Handling Unit Fan Failure

An AHU fan failure may cause the room to overheat. This may affect the electrical equipment and instrumentation.

The room high temperature alarm is indicated in the LOS-113 and the common trouble alarm in the SPCS console.

During fan repair, it may become necessary to open the doors, or supply a portable fan to ventilate the room.

5.4.2 Heater Failure

The heater in the AHU failure may result in low room temperature, which may affect the electrical equipment and instrumentation.

The room low temperature alarm is indicated in LOS-113 and the common trouble alarm in the SPCS console.

During heater repair, it may be necessary to supply a portable heater.

6.0 MAINTENANCE

6.1 PREVENTIVE MAINTENANCE, INSPECTION, AND SURVEILLANCE

Preventive maintenance, inspection, and surveillance are covered in the Performance Monitoring Program. Equipment operation and maintenance manuals are available and are referenced in Section 7.1.

For system with backup equipment, alternating equipment operation is recommended.

6.2 CORRECTIVE MAINTENANCE

Most equipment in HVAC systems can be repaired and maintained in place. Adequate space is provided around the equipment. With the exception of the water chiller, most equipment can be repaired by maintenance personnel. A supplier representative for the chiller may be required.

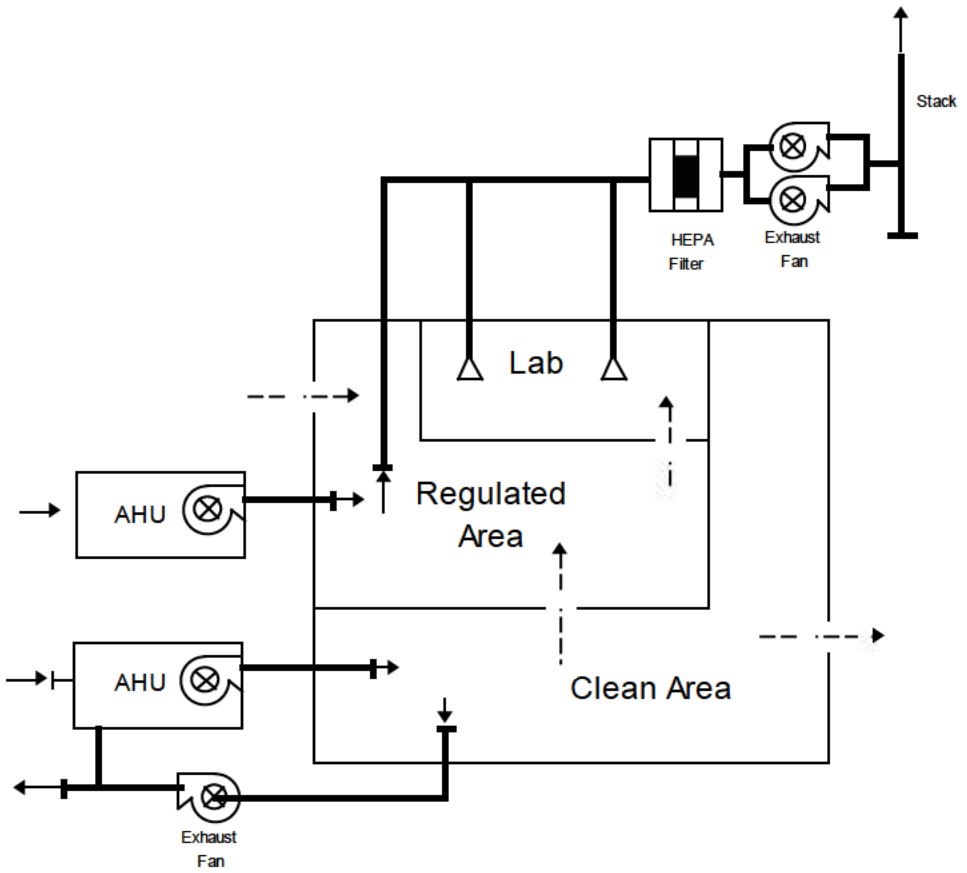

Figure 1 Operations Building (704-Z) HVAC System

Note: Clean Area HVAC System shown is typical representation of four units.

7.0 APPENDICES

7.1 REFERENCES

7.1.1 HVAC Calculations

Calculation No.	Title
704L01	Regulated Area HVAC Load & Equipment
704L02	Clean Area HVAC System
704L03	Regulated Area AHU Fan Rating
704L04	Regulated Area Exhaust Fan Rating
704L05	Clean Area Locker Room AHU Fan Rating
704L06	Clean Area Office AHU Rating
704L07	Clean Area Lunch Room AHU Fan Rating
704L08	Clean Area Locker Area Exhaust Fan Rating
704L09	Clean Area Lunch/Conference Room Return Fan Rating
704L10	Clean Area Office Return Fan Rating
901L11	Z-Area Pump House HVAC System
Z210L01	Process Area HVAC Load and Equipment
Z210L06	Weld Hood Exhaust Fan SP Rating
Z210L07	Process Area Supply Pressure Loss
Z210L08	Process Area Exhaust Pressure Loss
Z210L09	Maintenance Shop Supply Pressure Loss
Z210L10	Maintenance Shop Exhaust Pressure Loss
Z210L11	CCR/E&I Shop/Offices Supply Pressure Loss
Z210L12	ECR/Utilities Room Supply Pressure Loss
Z210L13	ECR/Utilities Room Return Pressure Loss

7.1.2 Z-Area HVAC Startup and Operating Procedures

SOP 210-Z-4280	Process Building (210-Z) HVAC Systems (U)
SOP 704-Z-4273	Operations Building (704-Z) Chilled Water System Operation (U)
SOP 704-Z-4285	704-Z Regulated HVAC Operation (U)
SOP 951-Z-4396	Electrical Substation Building, 951-Z, Startup/Shutdown HVAC System (U)
SOP 210-Z-4281	Opening and Closing Service Doors to the Process Room (U)

7.2 PARAMETERS LIST

HVAC system parameters are listed in Section 2.2.

7.3 DRAWINGS AND SPECIFICATIONS

7.3.1 HVAC Piping and Instrument Diagrams

P&ID/FD No.	Title
W776800	Process Building 210-Z – Process Area HVAC System FD
W776801	Process Building 210-Z – Maintenance Shop HVAC System FD
W776802	Process Building 210-Z – CCR/E&I Shop/Offices HVAC System FD
W776803	Process Building 210-Z – ECR/Utilities Facility HVAC System FD
W776810	Electrical Substation 951-Z – HVAC System FD
W776830	Operations Building 704-Z – Clean Area HVAC System Diagram
W776831	Operations Building 704-Z – Chilled Water System Diagram
W776832	Operations Building 704-Z – Regulated Area HVAC System Diagram
W776850	Process Building 210-Z – Process Area HVAC Supply System P&ID
W776851	Process Building 210-Z – Process Area HVAC Exhaust System P&ID
W776852	Process Building 210-Z – Maintenance Shop HVAC System P&ID
W776854	Process Building 210-Z – CCR/E&I Shop/Offices HVAC System P&ID
W776855	Process Building 210-Z – CCR/E&I Shop/Offices Duct Distribution System P&ID
W776856	Process Building 210-Z – CCR/E&I Shop/Offices Humidification System P&ID
W776857	Process Building 210-Z – ECR/Utilities Room HVAC System P&ID
W776858	Process Building 210-Z – ECR/Utilities Room Duct Distribution System P&ID
W776870	Electrical Substation 951-Z HVAC System P&ID
W776915	Fire Pump House 901-Z HVAC System P&ID

7.3.2 HVAC General Arrangement/Equipment Location Drawings

Drawing No.	Title
W775961	Saltstone Process Building 210-Z Floor Plan Duct Layout West Side
W775962	Saltstone Process Building 210-Z Floor Plan Duct Layout East Side
W775963	Saltstone Process Building 210-Z Roof Plan Duct Layout
W775964	Saltstone Process Building 210-Z Roof Plan Duct Layout
W775965	Saltstone Process Building 210-Z Section A Duct Layout
W775966	Saltstone Process Building 210-Z Section B Duct Layout
W775967	Saltstone Process Building 210-Z Section C Duct Layout
W775968	Saltstone Process Building 210-Z Section D Duct Layout
W775980	Substation Building 951-Z Plan and Section Duct Layout
W776835	Saltstone Operations Building 704-Z Floor Plan

7.3.3 HVAC Electrical Schematic Diagrams

Drawing No.	Title
W774049	Substation Building Schematic Diagram
W774050	Saltstone Process Area 210-Z Schematic Diagram & PNL Schedule Welding Hood Exhaust Fan, Battery Room Exhaust Fan & PNL Y121
W774061	Saltstone Process Building 210-Z Schematic Diagram CCR/E&I Shop HVAC
W774062	Saltstone Process Building 210-Z Schematic Diagram ECR/Utilities Room HVAC
W774063	Saltstone Process Building 210-Z Schematic Diagram Return/Exhaust Fans
AA24634-1 sht 163	704-Z HVAC Controls

7.3.4 HVAC Control and Ladder Logic Diagrams

Drawing No.	Title
W768550	CLD – Process Building 210-Z, Process Area HVAC Supply Fans and Filters
W768551	CLD – Process Building 210-Z, Process Area HVAC Exhaust Fans and Filters
W768553	CLD – Process Building 210-Z, ECR/Utilities Room HVAC Exhaust Fan and Filter
W768556	CLD – Process Building 210-Z, ECR/Utilities Room HVAC Supply Fan and Filter
W768557	CLD – Electrical Substation 951-Z HVAC & Diesel Generator
W768609	CLD - Fire Pump House 901-Z H&V

7.3.5 HVAC Specifications

Specification No.	Title
M-0072	Air Handling Units
M-0073	Air Supply Units
M-0077	Fire Dampers
M-0078	Automatic Dampers
M-0080	Package Air Conditioning Units
M-0081	Centrifugal Fans
M-0090	HEPA Filter Housings
M-0155	Air Flow Measuring Stations
M-0244	Leak Testing Requirement for Installed HVAC Ductwork Systems
M-0450	Electronic Steam Generator
M-0451	HVAC Ducts & Accessories for Unloading Office, Process Building 210-Z, Low Point Drain Tank, Electrical Substation 951-Z

7.3.6 HVAC Equipment Drawings

Equipment No.	Equipment Name	Outline Drawing	O&M Manual
Z-210-HVAC-AHU-0001	Process Area AHU	MB20004-041	MB20004-055 & 056
Z-210-HVAC-BLO-0001	Process Area Supply Air Blower	MB20006-226	
Z-210-HVAC-BLO-0002	Process Area Supply Air Blower	MB20006-226	
Z-210-HV-FLT-0004	Process Area HEPA Filter Housing	MB20012-037	MB20012-013
Z-210-HV-FLT-0005	Process Area HEPA Filter Housing	MB20012-037	MB20012-013
Z-210-HV-FAN-0006	Process Area Exhaust Blower	MB20006-228	
Z-210-HV-FAN-0007	Process Area Exhaust Blower	MB20006-228	
Z-210-HVAC-ACU-0008	Maintenance Shop Packaged AC Unit	SRRA015215	
Z-210-HVAC-FAN-0009	Welding Hood Exh. Fan	MB20006-280	
Z-210-HVAC-ACU-0010	ICR/E&I Shop/ Office AC Unit	SRRA015215	
Z-210-HVAC-SG-0011	Electronic Steam Generator	SA24633-101	SA24633-179
Z-210-HVAC-AHU-0012	ECR/Utilities Room AHU	MB20003-017	
Z-210-HVAC-FAN-0013	Maintenance Shop Return/Exhaust Fan	MB20006-229	
Z-210-HVAC-EXHR-0014	Battery Room Wall Exhauster	Not available	
Z-210-HVAC-FAN-0015	ECR/Utilities Room Return/Exhaust Fan	MB20006-230	
Z-704-HVAC-AHU-0001	Regulated Area AHU	AA24634-67	AA24634-153
Z-704-HV-FLT-0004	Regulated Area HEPA Filter Housing	MB20012-044	MB20012-013
Z-704-HV-FAN-0005	Regulated Area Exhaust Fan	AA24634-149	AA24634-150

Equipment No.	Equipment Name	Outline Drawing	O&M Manual
Z-704-HV-FAN-0005	Regulated Area Exhaust Fan	AA24634-149	AA24634-150
Z-704-HV-FAN-0006	Regulated Area Exhaust Fan	AA24634-149	AA24634-150
Z-704-CHW-CHU-0001	Water Chiller	Later	Later
Z-704-CHW-P-0001	Chilled Water Pump	AA24634-95	AA24634-152
Z-704-CHW-TK-0009	Expansion Tank	AA24634-95	Not required
Z-704-CHW-SEP-0010	Chilled Water Air Separator	AA24634-95	Not required
Z-704-HVAC-AHU-0011	Locker Area AHU	AA24634-67	AA24634-153
Z-704-HVAC-FAN-0012	Lunch/Conference Room Return/Exhaust Fan	AA24634-95	AA24634-150
Z-704-HVAC-AHU-0013	Lunch/Conference Room AHU	AA24634-67	AA24634-153
Z-704-HVAC-AHU-0014	Office Area AHU	AA24634-67	AA24634-153
Z-704-HVAC-FAN-0015	Office Area Return Fan	AA24634-95	AA24634-150
Z-704-HVAC-FAN-0016	Locker Area Exhaust Fan	AA24634-95	AA24634-150
Z-951-HVAC-AHU-0001	Electrical Substation AHU	MB20003-016	