Savannah River Remediation

WSRC-TR-2002-00403
Rev. 28

Tank Farm Transfer Control Program, Pump Tank Transfer Jet Control Program, and Waste Tank Chemical Cleaning Program

Program Description Document

PREPARED BY:

N. Rao Pasala 7/1/19

N. Rao Pasala, Process Safety and Regulatory Engineer / Signature — Date

VERIFIED BY:

Azikiwe Hooker 7/1/2019

Azikiwe Hooker, Process Safety and Regulatory Engineer / Signature (Verification by Document Review) — Date

Technical Review Number: 11Q, 1.05, CX-1

APPROVED BY:

Christine Ridgeway 7/3/19

Chrisitine M. Ridgeway, Process Safety and Regulatory Engineering Manager / Signature — Date

Helen Boyd 7/9/19

Helen Boyd, Program Review Committee Chairperson / Signature — Date

for 7-3-19

John Occhipinti, Tank Farm Facility Engineering Manager / Signature — Date

7-3-19

Doug Bumgardner, Tank Farm & ETP Operations Facility Manager / Signature — Date

Summary of Revisions

02/03	Revision 0	Original Issue.
03/03	Revision 1	See Revision 16 for Revision Summary
06/03	Revision 2	See Revision 16 for Revision Summary
11/03	Revision 3	See Revision 16 for Revision Summary
01/04	Revision 4	See Revision 16 for Revision Summary
09/04	Revision 5	See Revision 16 for Revision Summary
12/04	Revision 6	See Revision 16 for Revision Summary
08/05	Revision 7	See Revision 16 for Revision Summary
10/06	Revision 8	See Revision 16 for Revision Summary
2/07	Revision 9	See Revision 16 for Revision Summary
12/07	Revision 10	See Revision 16 for Revision Summary
1/08	Revision 11	See Revision 16 for Revision Summary
5/08	Revision 12	See Revision 16 for Revision Summary
7/08	Revision 13	See Revision 16 for Revision Summary
9/08	Revision 14	See Revision 16 for Revision Summary
10/09	Revision 15	See Revision 16 for Revision Summary
7/10	Revision 16	See Revision 16 for Revision Summary

7/10 Revision 17: 2010 DSA annual update changes and other Clarifications:

- Section 3.7: Modified over-pressure evaluation attribute and implementation item 1 to match with DSA annual update and HLW-CRF-10007.
- Section 3.8: Revised to add the statement of not requiring flushing pipe branches off of the transfer path to match with DSA annual update.
- Section 3.13: Revised to add the statement of not requiring flushing pipe branches off of the transfer path to match with DSA annual update.
- Section 3.17: Revised to add the statement of not requiring flushing pipe branches off of the transfer path to match with DSA annual update.
- Revised Reference 15.
- Added Reference 28.

1/12 Revision 18: Authorization Agreement (AA) changes:

- Revised Section 4.3 to align with AA document (reference 9) rev 3.
- Deleted reference 27.

7/12 Revision 19: 2012 Annual DSA Update & Type I/II Waste Tanks undergoing Chemical Cleaning Process DSA and TSR changes:

- Revised Section 3.26 to align with DSA Annual Update of Section 3.4.2.9.3.
- Revised Document Title to add Waste Tank Chemical Cleaning Program.
- Revised Sections 3.1, 3.15, 3.20, and 3.28 to align with Type I/II Waste Tanks undergoing Chemical Cleaning Process DSA and TSR changes.
- Added Smart Plant Foundation (SPF) on page 17.
- Added references 29, 30 and 31.

6/14 Revision 20 General Format change per S4-ENG.36 procedure

- Added TSR 5.8.2.21 to all attributes pertaining to Transfer Control Program.
- Revised Section 4.3 to delete the option of single sound isolation valve with justification for inactive locations.
- Revised Section 5.3 to confirm to latest AA revision

11/14 Revision 21 Revised for 2014 DSA Annual Update:

- Section 4.4 is deleted to match with DSA annual update
- Section 4.20, implementation item 3 has been deleted to align with current DSA. Type IV Tank waste hydrogen generation rate requirement is deleted in Rev. 9 of the DSA
- Section 4.26, revised to add LDB Drain Cell cover requirements for Transfers in and out of Tanks 49 and 51.
- Section 4.28, annual update deleted Tanks 5 & 6 from Waste Tank Chemical Cleaning since those two Tanks are grouted.

11/15 Revision 22 Revised for 2015 DSA Annual Update:

- Section 4.1, revised to add 2 Sigma uncertainty for IDP calculations using sample results, deleted H-Area Type IV tanks from LOW REM TRANSFERS list and added to the criteria, deleted information related to MECHANICAL CLEANING MODE, in implementation section of 4.1, deleted item 3 since no FTF pump tanks are receiving outside facilities waste.
- Section 4.2, added 2 Sigma uncertainty to IDP calculations.
- Section 4.3, corrected a typo from 3.28 to 4.28.
- Section 4.13, added 2 Sigma uncertainty to flushing IDP and clarified Corrosion Control flushing requirement.
- Section 4.14, deleted the statement related to CONTENGENCY TRANSFERS in the attribute, added explanation of not needing to stop the transfer equipment for certain activities into waste tanks.
- Section 4.21, revise “during” to “prior to”

- Sections 4.22 and 4.23, revised to add 2 Sigma uncertainty for IDP calculations using sample results
- References Section, updated references 11, 15 and added reference 32.

4/16 Revision 23 Revised for Trapped Gas PISA, DSA Changes.

- Revised Section 4.6 to add "prior to transfer initiation"
- Revised Section 4.7 to change Overpressure evaluation to Transfer Pump Speed Evaluation and added the new criteria
- Revised Section 4.9 to add "prior to transfer initiation"
- Revised Section 4.14 to add a clarification that Dissolution Skid do not have a continuous make up capability
- Revised Section 4.23 to clarify the implementing item

9/16 Revision 24 Revised for 2016 DSA Annual Update:

- Revised Section 4.3 to clarify the "Drip-Wise" leak definition

12/17 Revision 25 Revised for 2017 DSA Annual Update and STAR items:

- Section 4.3, deleted additional requirement for VBs leak check for HIGH REM WASTE TRANSFERS, revised non-waste transfer definition criteria, deleted implementation item # 2, revised implementation item # 3. (Annual Update)
- Deleted reference to / mention of 242-16F evaporator throughout the document. (Annual Update)
- Sections 4.26 & 4.27, deleted 15/16 VB requirements. (Annual Update)
- Section 4.28, deleted the individual tank numbers and revise to say Type I & II waste tanks except Tank 1. (STAR 2017-CTS-002812, Action Item # 4)

6/18 Revision 26 Revised for 2018 DSA Addendum (Operation of the 242-25H Evaporator with Leak Sites):

- Updated the following sections: 2.0, 4.20, 4.22, & 4.30.

10/18 Revision 27 Revised for 2018 Tank Closure Cesium Removal (TCCR) Unit Implementation and Star Item 2016-CTS-006619 (Action #4)

- Updated the following sections: 1.0, 2.0, 4.1, 4.2, 4.7, 4.14, 4.16, & 4.22.

6/19 Revision 28 Revised for SWPF Interface DSA Changes:

- Updated Sections to add TSR or DSA requirement numbers
- Revised Section 4.1 to change Bounding Supernate IDP to 9.7E07 rem/gal
- Revised Section 4.3 to add isolation of SWPF to Tank 50 material from HDB-7 and HDB-8
- Added Section 4.4 for Submersible Blender Pump Operation Program
- Revised Section 4.13 to add pre-transfer flush for HIGH REM TRANSFERs
- Revised Section 4.14 to remove equipment to stop siphons not requiring for transfers in and out of Tank 50
- Revised Section 4.21 to add EMD STP operations to ARM locations

Table of Contents

Page

1.0 PURPOSE 1
2.0 SCOPE 2
3.0 BACKGROUND 3
4.0 PROGRAM DESCRIPTION 3
Inputs, key attributes, evaluations, criteria and outputs are listed in the following sub-sections for each requirement. *3*
4.1 Transfer Type (TSR 5.8.2.21) (SAC) *3*
4.2 F-Area Tank Farm SLUDGE SLURRY TRANSFERS (TSR 5.8.2.21) (SAC) *11*
4.3 Transfer Path (TSR 5.8.2.21) (SAC) *13*
4.4 submersible Blender Pump (SBP) Operation (TSR 5.8.2.58) (SAC) *20*
4.5 Independent Verification of Correct TRANSFER PATH Alignment (TSR 5.8.2.21) (SAC as noted) 22
4.6 Siphon Evaluation (TSR 5.8.2.21) *25*
4.7 Transfer Pump Speed Evaluation (TSR 5.8.2.21) *27*
4.8 Core Pipe Pluggage due to Salt Solids Formation (TSR 5.8.2.21) (SAC) *31*
4.9 Water Hammer Evaluation (TSR 5.8.2.21) *33*
4.10 Tank Riser Leak Detection (TSR 5.8.2.21) (SAC) *34*
4.11 Transfer Isolation Valve Evaluation (TSR 5.8.2.21) (SAC) *35*
4.12 Second Isolation Device (TSR 5.8.2.21) *37*
4.13 Flushing the Core Pipe after WASTE TRANSFERS (TSR 5.8.2.21) (SAC) *38*
4.14 Isolation Device to Stop the Transfer (TSR 5.8.2.21) (SAC) *41*
4.15 Transfer Monitoring (TSR 5.8.2.21) (SAC as noted) *44*
4.16 Waste Tank Space Availability (TSR 5.8.2.21) *49*
4.17 ESP Sludge Slurry Transfers (TSR 5.8.2.21) (SAC) *50*
4.18 Pump Tank Space for Canyon Transfers (DSA Section 3.4.2.18.1) *52*
4.19 Pump Tank Transfer Jet Control (TSR 5.8.2.36) (SAC) *53*
4.20 Hydrogen Generation Rate Control (TSR 5.8.2.31) (SAC) *55*
4.21 ARM Location Program (TSR 5.8.2.41) *56*
4.22 Inhalation Dose Potential Control (TSR 5.8.2.51) (SAC) *57*
4.23 Waste Acceptance Criteria Program (TSR 5.8.2.15) (SAC) *60*
4.24 Transfers from Waste Tank Annuli (TSR 5.8.2.23) (SAC) *61*
4.25 Pump Tank Backup Ventilation System Systems Program (TSR 5.8.2.37) (SAC) *62*
4.26 DSA Section 3.4.2.9.3 ..... *63*
4.27 242-16H Evaporator Chemical Cleaning (TSR 5.8.2.52) (SAC) *65*
4.28 WASTE TANK CHEMICAL CLEANING PROGRAM (TSR 5.8.2.53) (SAC as noted) *66*
4.29 H-Area Transfer Facility Transient Fire Loading (TSR 5.8.2.21) (SAC) *76*
4.30 EVAPORATOR FEED QUALIFICATION PROGRAM (TSR 5.8.2.25) (SAC) *77*
5.0 OTHER COMMITMENTS RELATED TO WASTE TRANSFERS 78
5.1 FFA Commitments (Reference 19) *78*
5.2 Wastewater Permit Commitments *78*
5.3 Authorization Agreement Commitments (Reference 9) *79*
5.4 Best Management Practices *80*
5.5 DOE Manual 435.1-1 Commitments (Reference 24) *81*
6.0 REFERENCES 82
ATTACHMENT-1, LEAK DETECTION LOCATIONS 85

List of Acronyms and Abbreviations

AA	Authorization Agreement
AC	Administrative Control
AFD	Adjustable Frequency Drive
AIM	Asset and Information Management
ARM	Area Radiation Monitor
ASME	American Society of Mechanical Engineers
BMP	Best Management Practice
BTU	British Thermal Unit
Ci	Curie
CLI	Component Location Identification
COP	Clean Out Port
CST	Concentration, Storage, and Transfer
CSTF	Concentration, Storage, and Transfer Facilities
CTS	Contingency Transfer System
DATR	Design Authority Technical Review
DB	Diversion Box
DCS	Distributed Control System
DHEC	Department of Health and Environmental Control
DOE	Department of Energy
dpm	disintegrations per minute
DSA	Documented Safety Analysis
DWPF	Defense Waste Processing Facility
EG	Evaluation Guideline
EMD	Curtis-Wright Electro-Mechanical Division
ERD	HLW Emergency Response Data and Waste Tank Data (N-ESR-G-00001)
ESP	Extended Sludge Processing
ETAF	Electronic Transfer Approval Form
ETP	Effluent Treatment Project
FDB	F-Area Diversion Box
FFA	Federal Facilities Agreement
FPP	F-Area Pump Pit
FPT	F-Area Pump Tank
ft^3	cubic foot
FTF	F-Area Tank Farm
gal	gallon
GDL	Gravity Drain Line
gpm	gallons per minute
HDB	H-Area Diversion Box
HEPA	High-Efficiency Particulate Air
HLLCP	High Liquid-Level Conductivity Probe
HPFP	High Point Flush Pit
HPP	H-Area Pump Pit
HPT	H-Area Pump Tank

hr	hour
HTF	H-Area Tank Farm
IAL	Inter Area Line
IDP	inhalation dose potential
ITP	In-Tank Precipitation
IV	Independent Verification
kg	kilogram
L	liter
LCO	Limiting Condition for Operation
LDB	Leak Detection Box
LPS	Leak Probe Sleeve
MEL	Master Equipment List
ml	milliliter
MLDB	Modified Leak Detection Box
NCR	Non-Conformance Report
OA	Oxalic Acid
OOS	Out of Service
ORPS	Occurrence Reporting and Processing System
PAAA	Price Anderson Amendments Act
PDD	Program Description Document
PP	Pump Pit
rem	roentgen equivalent man
SAC	Specific Administrative Control
SC	Safety Class
SPF	Smart Plant Foundation
SS	Safety Significant
SBP	Submersible Blender Pump
SMP	Submersible Mixer Pump
ST	Source Term
STP	Submersible Transfer Pump
TCCR	Tank Closure Cesium Removal
TSR	Technical Safety Requirements
VB	Valve Box
VFD	Variable Frequency Drive
VSD	Variable Speed Drive
WAC	Waste Acceptance Criteria
WCP	Waste Compliance Plan
WCS	Waste Characterization System
wt%	weight percent

1.0 PURPOSE

The purpose of this PDD is to provide background information and describe the attributes of the Concentration, Storage, and Transfer Facilities (CSTF) Transfer Control Program and Pump Tank Transfer Jet Control Program in sufficient detail such that these programs can be implemented. Also, it will document implementation details of other commitments delineated in DSA/TSR Administrative Control Programs, Federal Facilities Agreement (FFA), Wastewater Permits, Price Anderson Amendments Act (PAAA), Authorization Agreement (AA), DOE Manual 435.1-1, and Best Management Practices (BMPs) related to WASTE TRANSFERS.

Commitments taken from the DSA/TSR that are delineated in this PDD involve transfer related aspects only. Other non-transfer related commitments that may be contained within a portion of a TSR AC Program referenced within this PDD are not contained herein. An example of this is Section 4.21 for the ARM Location Program. This section only discusses commitments related to above-ground transfers and does not discuss non-transfer related requirements (e.g. SMP related requirements).

The output documents generated by this PDD shall ensure independent verification or validation of results and conclusions. Output documents include, but are not limited to, calculations, evaluations, procedures, and technical reports.

Calculations issued as output documents shall be confirmed Type 1 calculations in accordance with the requirements of the E7 Manual, Procedure 2.31. Technical Reports issued as output documents shall comply with the requirements of E7 Manual, Procedure 3.60. Assumptions and recommendations from these reports shall be addressed in either the Design Authority Technical Review (DATR), waste transfer approval procedures, or other evaluations performed against the proposed WASTE TRANSFER.

The functional classification of a calculation issued as an output document in support of implementation items contained in this PDD shall be in accordance with the level of control as dictated in DSA Chapter 3 (either SS or SC).

Engineering evaluations issued as output documents shall be confirmed Type 2 calculations in accordance with the requirements of the E7 Manual, Procedure 2.31. These engineering evaluations may also be issued to the Document Control Center as drawings for retrievability in accordance with E7 Manual, Procedure 2.30.

Samples required in this document shall follow the methodology described in Reference 11.

Given the limited applicability of the Transfer Control Program attributes to CONTINGENCY TRANSFERS and TCCR TRANSFERS, those attributes which are required by the DSA/TSR will be directly noted in each attribute section. Where CONTINGENCY TRANSFER and TCCR TRANSFER is not specifically noted, it shall be understood that the attribute does not apply.

1.1 PDD Owner Qualifications:

The qualifications for PDD ownership are established in S-4 Manual Procedure Eng-36.

1.2 PDD Owner Responsibilities:

The PDD Owner Responsibilities are established in S-4 Manual Procedure Eng-36.

2.0 SCOPE

The scope of this Program Description Document (PDD) is to provide guidance to engineering and operational personnel for implementing transfer related controls contained in the Documented Safety Analysis (DSA) programs and Technical Safety Requirements (TSR) Administrative Controls (ACs) in transfer procedures, transfer evaluations and approval (ETAF) procedures. This document is not a Safety Basis document.

Revision 27 of this PDD supports changes associated with the TCCR Unit System Implementation and Star Item 2016-CTS-006619 (Action #4) .

3.0 BACKGROUND

3.1 Safety Function

The safety function of CSTF Transfer Control Program is to protect bounding conditions or serve as a first level of control within the accident analyses. Several transfer related requirements from other TSR Admin. Control programs are also included in this PDD.

4.0 PROGRAM DESCRIPTION

INPUTS, KEY ATTRIBUTES, EVALUATIONS, CRITERIA AND OUTPUTS ARE LISTED IN THE FOLLOWING SUB-SECTIONS FOR EACH REQUIREMENT.

4.1 TRANSFER TYPE (TSR 5.8.2.21) (SAC)

ATTRIBUTE REQUIREMENT: 5.8.2.21.a

Prior to TRANSFER INITIATION a determination of the type of transfer shall be performed. This evaluation will distinguish between HIGH-REM WASTE TRANSFERS, LOW-REM WASTE TRANSFERS, CHEMICAL CLEANING TRANSFERS, ESP SLUDGE SLURRY transfers, and SLUDGE SLURRY TRANSFERS for all planned transfers.

DSA Chapter 3 "Hazard and Accident Analyses" used several waste streams to signify the material at risk on a per unit volume basis. For inhalation dose potential requirements, an analytical uncertainty of 2 Sigma shall be included when sample results are used. Some exceptions are described in DSA Section 5.3 and these exceptions are identified in this document as needed. For inhalation dose potential limit verifications, if a specific uncertainty is not included with the sample results (for use of the 2 Sigma application), then a generic conservative analytical uncertainty may be used as described in Reference 32. Reference 32 allows the use of 27% uncertainty for Sludge Slurry IDP calculations and 100% uncertainty for Supernate IDP calculations if no sample results uncertainty is available. When comparing to the IDP limits, the conservative uncertainty values can be used to lower the limit instead of calculating the IDP with uncertainty.

IDP uncertainty can be calculated based on isotopic concentration measurement uncertainty only since uncertainties associated with physical property data (e.g. mass, density) are very small in comparison to isotopic concentration uncertainties and can be ignored without significant impact on the overall uncertainty (reference 32). Also, analytical uncertainty would not be applicable for concentrations reported at Minimum Detectable Levels (MDL), as there is at least a 95% confidence that the result is below this value.

HIGH-REM WASTE TRANSFERS have an inhalation dose potential (including 2 Sigma uncertainty) of greater than 2.0E+08 rem/gal. IDP calculations for HIGH/ LOW REM transfer types will be performed outside the WCS. Therefore, uncertainty will be included in the calculations and WCS limits will not be changed.

CHEMICAL CLEANING TRANSFERS are WASTE TRANSFERS containing Oxalic Acid (OA) with IDP less than or equal to 9.8E+07 rem/gal and will be categorized separately from HIGH-REM and LOW-REM WASTE TRANSFERS. Values used within this program represent broad chemistry regimes related to applicability of test data to DSA assumptions. These values do not represent thresholds over which a specific limit is crossed. Thus, these values do not need to include analytical uncertainty.

LOW-REM WASTE TRANSFERS have an inhalation dose potential of less than or equal to 2.0E+08 rem/gal. If limits are met by programs (or their defining aspects) and do not require sample results, then analytical uncertainty is not applicable. The following may be categorized as LOW-REM WASTE TRANSFERS:

- Transfers out of H-Area waste tanks that implement TSR Administrative Control 5.8.2.19 (Sludge Carryover Minimization Program) No uncertainty required.
- Transfers of evaporator bottoms. No uncertainty required.
- F-Area transfers (restricted to less than or equal to 16.7 wt% sludge solids or have an inhalation does potential that meets the LOW-REM WASTE TRANSFER criteria [as determined by engineering evaluation]). No uncertainty required.

SLUDGE SLURRY TRANSFERS out of Waste Tanks 33 and 34 when the suction of the transfer device (pump or jet) is below the sludge layer shall be verified by sampling to have an inhalation dose potential (including 2 Sigma uncertainty) of less than or equal to 2.0E+08 rem/gal prior to the transfer. IDP calculations for HIGH/ LOW REM transfer types will be performed outside the WCS. Therefore, uncertainty will be included in the calculations and WCS limits will not be changed.

- Transfers out of waste tanks (including Tanks 33 and 34) that do not comply with Administrative Control 5.8.2.19 but the suction of the transfer device (pump or jet) is at or above the sludge layer. No uncertainty required.

Transfers from other facilities which have been shown to be less than or equal to 2.0E+08 rem/gal (including 2 Sigma uncertainty) by their Waste Compliance Plan (WCP). IDP calculations for HIGH/ LOW REM transfer types will be performed outside the WCS. Therefore, uncertainty will be included in the calculations and WCS limits will not be changed.

CSTF initiated transfers that have been verified by sampling to have an inhalation dose potential (including 2 Sigma uncertainty) of less than or equal to 2.0E+08 rem/gal. IDP calculations for HIGH/ LOW REM transfer types will be performed outside the WCS. Therefore, uncertainty will be included in the calculations and WCS limits will not be changed.

ESP SLUDGE SLURRY is a type of WASTE TRANSFER material distinguished by its radiolytic hydrogen generation rate. The radiolytic hydrogen generation rate of ESP SLUDGE SLURRY is greater than 1.5E-5 ft^3/gal-hr and less than or equal to 5.0E-5 ft^3/gal-hr. Waste that is being transferred with a radiolytic hydrogen generation rate greater than1.5E-5 ft^3/gal-hr must be classified as ESP SLUDG ESLURRY. Classification of material as ESP SLUDGE SLURRY is independent of the inhalation dose potential of the material and is independent of the waste tank containing the material being classified as an ESP SLUDGE SLURRY WASTE TANK. No uncertainty required.

A SLUDGE SLURRY TRANSFER is a WASTE TRANSFER that does not comply with the Sludge Carryover Minimization Program (Administrative Control 5.8.2.19). No uncertainty required.

Accident Analyses are performed for various types of transfers and controls are established based on the type of WASTE TRANSFER. Therefore, it is important to determine the type of WASTE TRANSFER prior to implementing the applicable controls.

Definitions of TCCR TRANSFERS and CONTINGENCY TRANSFERS given below for completeness; however, this attribute is not applicable to these transfers.

A TCCR TRANSFER is a transfer of waste to/from the TCCR Unit or transfer of waste originating from the primary side of Tank 10. TCCR TRANSFERS are considered WASTE TRANSFERS but are categorized separately from “HIGH-REM” or “LOW-REM” waste transfers. TCCR TRANSFERS have an inhalation dose potential of less than or equal to 1.4E+06 rem/gal (Tank 10 TCCR Feed Stream) or less than or equal to 2.1E+06 rem/gal (Tank 10 TCCR Sludge Slurry Stream).

CONTINGENCY TRANSFERS are transfers with an IDP less than Bounding Supernate (See DSA Section 3.4.2.12.3); therefore, waste transfer requirements for HIGH-REM WASTE TRANSFERS and sludge-slurry waste do not apply to CONTINGENCY TRANSFERS. Transfers with inhalation dose potential greater than 9.7E+07 rem/gal (Bounding Supernate) cannot be performed as CONTINGENCY TRANSFERS. Excluding waste tanks in ACIDIC CHEMICAL CLEANING MODE, Bounding Supernate is assumed to leak into the annulus (see DSA Section 3.4.2.12) and Contingency Transfers are assumed to be less than or equal to 9.7+07 rem/gal. Therefore, no samples are required for these waste tanks and analytical uncertainty does not apply.

CONTINGENCY TRANSFERS initiated from the annulus of a tank in ACIDIC AND NON-ACIDIC CHEMICAL CLEANING MODES, are permitted provided it has been shown that the inhalation dose potential (IDP) of the chemical cleaning slurry which has leaked to the annulus is less than or equal to 9.7E+07 rem/gal (including 2 Sigma uncertainty). If limits are met by programs (or their defining aspects) and do not require sample results, then analytical uncertainty is not applicable. In addition, the Transfer Control Program and Waste Tank Chemical Cleaning Program Requirements (5.8.2.21.g.

and 5.8.2.53) for these CHEMICAL CLEANING TRANSFERS do not apply based on the following.

- Flushing is not required due to self-draining design feature.
- The TRANSFER PATH associated with the CONTINGENCY TRANSFER is a dedicated path (hose-in-hose) from the annulus back to the primary tank bypassing the facility transferring network (e.g., valve boxes, diversion boxes, pump tanks).
- Because the transfer involves a PROCESS AREA (i.e., tank and annulus) in ACIDIC CHEMICAL CLEANING MODE which has been analyzed by the DSA to contain acidic waste, neutralization of the acidic waste is not required in the annulus prior to transfer or in the primary tank upon receipt.

IMPLEMENTATION:

Reference 7 documented that all F-Area Tanks (supernate and sludge slurry with 16.7 wt% sludge solids concentration) with the exception of Tank 34 have inhalation dose potentials less than 2.0E+08 rem/gal. For Tank 34 the required sludge concentration to reach 2.0E+08 rem/gal is 10 wt. % due to Am-241 process in F-Canyon between 1984 and 1989. There was some uncertainty that Am-241 may have been sent to Tank 33 during that time. Therefore, SLUDGE SLURRY TRANSFERS out of Tanks 33 and 34 are required to be verified less than 2.0E+08 rem/gal by sampling. All transfers out of F-Area Tanks are classified as LOW-REM WASTE TRANSFERS along with SLUDGE SLURRY TRANSFER verification requirements in Section 3.2.

CHEMICAL CLEANING TRANSFERS are limited to transfers originated from Type I/II Waste Tanks and are categorized separately from HIGH-REM and LOW-REM WASTE TRANSFERS. Except for CONTINGENCY TRANSFERS from the annulus of a Chemical Cleaning waste tank, CHEMICAL CLEANING TRANSFERS, by definition, have an IDP ≤ 9.8E+07 rem/gal. This value is defined in the DSA by a bounding analysis and requires no verification. Chemical Cleaning Mode entry requirement of ≤ 10,000 gallons of sludge protects the assumption of this bounding analysis.

DSA Section 3.4.2.12.3 assumption states that excluding Type I/II waste tanks undergoing chemical cleaning, only Bounding Supernate (IDP ≤ 9.7E+07 rem/gal) leaks from the tank into the annulus through the wall cracks. Bounding Sludge Slurry or ESP Sludge Slurry does not leak from the tank into the annulus. Therefore, IDP verification is not required for CONTINGENCY TRANSFERS except for Type I/II Waste Tanks undergoing chemical cleaning.

In NON-ACIDIC CHEMICAL CLEANING MODE, only WASTE TRANSFERS are permitted out of the treatment Waste Tank.

All H-Area Tank supernate transfers that comply with the Sludge Carryover Minimization Program can be categorized as LOW-REM WASTE TRANSFERS. SLUDGE SLURRY

TRANSFERS out of H-Area waste tanks and F-Area tanks 33 and 34 that do not meet the Sludge Carryover Minimization Program (e.g., minimum separation distance) but the suction of the transfer device (pump or jet) is at or above the sludge layer can be categorized as LOW-REM WASTE TRANSFERS. SLUDGE SLURRY TRANSFERS for these tanks with the transfer device (pump or jet) below the sludge layer shall be verified by sampling, ensuring that the inhalation dose potential (including 2 Sigma uncertainty) is less than or equal to 2.0E+08 rem/gal to be categorized as LOW-REM WASTE TRANSFERS. Sampling is required after each batch of slurrying of the settled sludge. Sampling methodology described in Reference 11 shall be followed. The inhalation dose potential can be evaluated using one of the following sample analysis options:

1. Gross α sample analysis result less than 0.2247 Ci/L. This value was derived in Reference 25 based on the bounding β value (from Bounding Sludge Slurry) and bounding γ value (from Bounding Supernate),

2. Sample wt% sludge solids + Sample analysis for the isotopes listed in the DSA input

3. Sample wt% sludge solids + Bounding Sludge Slurry inhalation dose potential

If the Waste Characterization System (WCS) reflects a sampled sludge slurry isotopic analysis results for these tanks, then WCS information is acceptable to use for categorizing as LOW-REM WASTE TRANSFERS.

In general, pump tanks are used as intermediate waste transfer facilities for transfers within the Tank Farms, between F and H Tank Farms and receipt from outside facilities. Influents to the pump tanks from outside facilities will be controlled through Waste Acceptance Criteria (WAC) and Waste Compliance Plan (WCP). If a pump tank receives a HIGH-REM WASTE TRANSFER waste stream, transfers out of or through the pump tank shall be considered as a HIGH-REM WASTE TRANSFER until the pump tank is pumped down to the heel. During transfers through a pump tank, the inhalation dose potential of the waste stream leaving the pump tank is assumed to be the same as the inhalation dose potential of the material entering the pump tank (i.e., a LOW-REM WASTE TRANSFER to a pump tank would be considered a LOW-REM WASTE TRANSFER after leaving the pump tank). Refer to DSA Section 3.4.1.5.2 for details.

If actions are taken to mobilize the solids heel in a pump tank (installation of a new pump tank agitator or other pump tank equipment does not necessarily result in mechanical agitation of the solids in the heel), the initial transfer through the pump tank shall be considered a HIGH-REM WASTE TRANSFER after leaving the pump tank regardless of the inhalation dose potential of the waste stream entering the pump tank, due to the presence of newly mobilized solids (unless the waste stream is confirmed not to be a HIGH-REM WASTE TRANSFER via sampling).

Current facility configuration assumptions of F-Area Tank Farm preclude a HIGH-REM WASTE TRANSFER from being initiated within F-Area Tank Farm. Facility modifications that could challenge these configuration assumptions (e.g., installing a new agitator in FPT-3) are required to be evaluated by the USQ process per Manual 11Q, Procedure 1.05, which would ensure that a HIGH-REM WASTE TRANSFER in F-Area Tank Farm does not occur without

proper safety basis changes and DOE approval. Normally sumps collect the groundwater and rainwater in-leakage. Typically, these sumps will be emptied into a pump tank or a waste tank and the transfer will be considered as a WASTE TRANSFER (LOW-REM or HIGH-REM WASTE TRANSFER) unless the contents can be classified as a non-waste transfer as explained below.

Transfers from secondary containment sumps are considered to be WASTE TRANSFERS unless the sump contents can be demonstrated to meet the following non-waste transfer criteria described in DSA Section 3.4.1.5.1:

- Transfer stream has a sufficiently low (orders of magnitude) inhalation dose potential (≤ 2.5E+05 rem/gal) such that hazards (e.g., spills, explosions) posed by the stream could not challenge the EGs.

- Hazards (e.g., spills, explosions) posed by the transfer stream will not release an amount of material that could challenge the chemical EGs, as defined in Reference 33. The amount of material released is determined from the use of the five-factor ST approach (see DSA Section 3.4.1.1)

Reference 34 evaluated chemical consequence associated with waste streams which are sufficiently low IDP <2.5E+05 rem/gal (non-waste transfers). It concluded that the worst case scenario yields a ST (<8.9 gallons) that does not challenge the Onsite chemical EGs as defined in Reference 33. Therefore, it bounds all other non-waste transfers and no additional evaluation for chemical consequences is needed as long as it meets Reference 34 requirements.

Reference 16 evaluated HPP-4 sump sample results of total alpha = 4.83E+03 dpm/ml and total beta/gamma = 8.69E+05 dpm/ml and material at risk of 15,000 gallons for non-waste transfer criteria and concluded that consequences for this material would be approximately 5 orders of magnitude less than the consequences reported in the DSA. Therefore, any sample results less than total alpha = 4.83E+03 dpm/ml, total beta/gamma = 8.69E+05 dpm/ml and material volume less than 15,000 gallons can be considered as a non-waste transfer. Since these determinations are based on orders of magnitude, analytical uncertainty does not apply.

If the inhalation dose potential for the proposed transfer exceeds the above evaluated sample results, further evaluation of the sample can be performed to determine if the transfer can be classified as a non-waste transfer. The sample analysis can be compared to the applicable worst-case accident scenario described in the CSTF DSA for the inhalation dose potential, material at risk, and unmitigated onsite consequences for the transfer. To qualify the transfer as a non-waste transfer, the consequence analysis for the proposed transfer can be based on current realistic (less conservative) inputs/variables as compared to the inputs used in the accident analysis documented in the CSTF DSA. For example, the analysis can consider both the limited material at risk due to the smaller volume (limited by the size of the sump), and curie content of the transfer (typically slightly contaminated groundwater and rainwater). If the projected consequences are significantly less than the DSA consequences, the transfer is not considered a WASTE TRANSFER. If no samples are analyzed, or the sample analysis consequences when evaluated against the worst-case accident scenario documented in the DSA are not significantly

lower than the DSA consequences, the contents shall be transferred either as a LOW-REM WASTE TRANSFER or HIGH-REM WASTE TRANSFER as explained below.

Sump transfers where the affected sump is considered a LEAK DETECTION LOCATION for a HIGH-REM WASTE TRANSFER shall be considered a HIGH-REM WASTE TRANSFER under the following conditions:

1. Sump transfer is required while the HIGH-REM WASTE TRANSFER procedure is open, regardless of actual sump level.

2. Sump transfer is required after the HIGH-REM WASTE TRANSFER procedure is closed and the affected sump level exceeded the TSR LCO level limit (e.g., LCO 3.7.1, 3.7.2) while the HIGH-REM WASTE TRANSFER procedure was open.

Once the HIGH-REM WASTE TRANSFER procedure is closed, if the sump contents are sampled and verified to have an inhalation dose potential of less or equal to 2.0E+08 rem/gal, the sump transfer can be considered as a LOW-REM WASTE TRANSFER. Additionally, if the affected sump level has been reduced below the TSR LCO level limit (with the HIGH-REM WASTE TRANSFER procedure closed), the subsequent sump transfer can be considered as a LOW-REM WASTE TRANSFER.

All other sump transfers, other than previously described, can be considered a LOW-REM WASTE TRANSFER.

The inhalation dose potential for Evaporator Bottoms in all three evaporators is always lower than the 2.0E+08 rem/gal waste stream limit (LOW-REM WASTE TRANSFER). Based on this, Evaporator transfer operations will be always considered as LOW-REM WASTE TRANSFERS and no verification is required.

Per DSA Section 3.4.2.17, consequences from the release of evaporator overheads tanks contents are judged to be negligible and no controls are required. Therefore, overheads are not considered as WASTE TRANSFERS.

<u>Implementation Items</u>:

1. Prior to TRANSFER INITIATION, determine the transfer type (HIGH-REM, LOW-REM, CHEMICAL CLEANING, ESP SLUDGE SLURRY, or SLUDGE SLURRY) for waste tank to waste tank transfers using WCS, sample results (as required), transfer device suction location and Sludge Carryover Minimization Program requirements. Document the results in the transfer procedure during the procedure development and waste transfer evaluation and approval procedure prior to the transfer. For inhalation dose potential requirements an analytical uncertainty of 2 Sigma shall be included when sample results are used.

2. Verify the transfer type documented in the waste tank to waste tank transfer procedure is valid using the waste transfer evaluation and approval procedure prior to the transfer.

3. Deleted

4. Verify that the waste stream from outside facilities is approved per the ERD (Reference 20) prior to the transfer.

5. Normally the inhalation dose potential from outside facilities into HTF pump tanks is less than or equal to 2.0E+08 rem/gal (LOW-REM WASTE TRANSFER) through the WAC/WCP. If the inhalation dose potential is greater than 2.0E+08 rem/gal (HIGH-REM WASTE TRANSFER) for H-Area pump tanks (i.e., the pump tank was in the TRANSFER PATH of a HIGH-REM WASTE TRANSFER), transfer out of or through these pump tanks shall be considered as a HIGH-REM WASTE TRANSFER until it is pumped down to the heel. LOW-REM WASTE TRANSFER procedures from these pump tanks shall verify that no HIGH-REM WASTE TRANSFER waste stream has been received into the pump tank that would cause the transfer from the pump tank to be considered as a HIGH-REM WASTE TRANSFER.

6. Transfers from sumps that are considered as LEAK DETECTION LOCATIONS for HIGH-REM WASTE TRANSFERS (based on the previously discussed criteria) shall be designated as HIGH-REM WASTE TRANSFERS. Transfers from sumps that are considered LEAK DETECTION LOCATIONS in support of maximum missing waste shall be designated as a LOW-REM WASTE TRANSFER or a non-waste transfer based on the previously discussed criteria.

7. SLUDGE SLURRY TRANSFERS initiated in H-Area waste tanks and F-Area tanks 33 and 34 where the suction of the transfer device (pump or jet) is below the sludge layer, must be verified by sampling to categorize the transfer as a LOW-REM WASTE TRANSFER. The inhalation dose potential (including 2 Sigma uncertainty) can be evaluated using one of the sampling analysis methods described in the implementation section and it shall be less than or equal to 2.0E+08 rem/gal to categorize them as LOW-REM WASTE TRANSFERS.

8. Prior to the transfer, verify the applicable crane booms are controlled per Reference 13.

9. The first transfer immediately after actions are taken to mobilize the solids heel in a pump tank shall be considered a HIGH-REM WASTE TRANSFER after leaving the pump tank regardless of the inhalation dose potential of the waste stream entering the pump tank unless the waste stream is confirmed not to be HIGH-REM WASTE TRANSFER via sampling.

10. Prior to use of CTS for a chemical cleaning slurry, IDP shall be verified by sampling or engineering evaluation to be less than or equal to 9.7E+07 rem/gal. For inhalation dose potential requirements an analytical uncertainty of 2 Sigma shall be included when sample results are used.

4.2 F-AREA TANK FARM SLUDGE SLURRY TRANSFERS (TSR 5.8.2.21) (SAC)

ATTRIBUTE REQUIREMENT: 5.8.2.21.a,b

F-Area Tank Farm SLUDGE SLURRY TRANSFERS shall be less than or equal to 16.7 wt% sludge solids or have an inhalation dose potential that meets the LOW-REM WASTE TRANSFER criteria [as determined by engineering evaluation]. SLUDGE SLURRY TRANSFERS out of Tanks 33 and 34 when the suction of the transfer device (pump or jet) is below the sludge layer shall be verified by sampling to meet the LOW-REM WASTE TRANSFER criteria.

IMPLEMENTATION:

When SLUDGE SLURRY TRANSFERS are planned for all F-Area Tank Farm Tanks except Tanks 33 and 34, sludge slurry wt% solids shall be verified to be less than or equal to 16.7 wt% or verify that it meets the LOW-REM WASTE TRANSFER dose potential criteria by engineering evaluation. The verification can be based on either sample results after the slurrying prior to the transfer or calculations using the information in WCS. For SLUDGE SLURRY TRANSFERS, out of Tanks 33 and 34, when the suction of the transfer device (pump or jet) is below the sludge layer, the inhalation dose potential shall be verified to be less than or equal to 2.0E+08 rem/gal, by sampling. The inhalation dose potential of 2.0E+08 rem/gal was calculated for 10 wt% slurry of Tank 34 material when the large quantity of Am-241 from the Rocky Flats Scrub Alloy campaigns was included (Reference 7). The large quantity of Am-241 contributed about 90% of the sludge slurry dose for the Tank 34 material. The Am-241 from Rocky Flats materials were derived based on accountability records, which have great accuracy and are not subject to much error. In addition, about 95% of the Rocky Flats scrub alloy material was attributed to Tank 34 which has a smaller sludge mass than Tank 33. Therefore, a reasonable limit to apply to Tank 34 during slurrying operations would be 8 wt% sludge solids in order to ensure 2.0E+08 rem/gal is not exceeded. Since the amount of sludge in Tank 33 is more than twice the amount of sludge in Tank 34, a sludge slurry with 16 wt% sludge solids from Tank 33 would provide significant margin to prevent exceeding 2.0E+08 rem/gal even if all the Am-241 from the Rocky Flats scrub alloy material were received into Tank 33 instead of Tank 34. The sample shall be performed after initial slurrying of the sludge inventory to be transferred. The results will be documented in an engineering evaluation.

IDP uncertainty can be calculated based on isotopic concentration measurement uncertainty only since uncertainties associated with physical property data (e.g. mass, density) are very small in comparison to isotopic concentration uncertainties and can be ignored without significant impact on the overall uncertainty (reference 32). Also analytical uncertainty would not be applicable for concentrations reported at Minimum Detectable Levels (MDL), as there is at least a 95% confidence that the result is below this value.

Implementation Items:

1. Verify that F-Area Tank Farm SLUDGE SLURRY TRANSFERS out of all Tanks except 33 and 34 are less than or equal to 16.7 wt% sludge solids or an engineering evaluation has been performed to determine the inhalation dose potential that meets the LOW-REM WASTE TRANSFER criteria prior to the transfer.

2. When the suction of the transfer device (pump or jet) is below the sludge layer, verify that SLUDGE SLURRY TRANSFERS out of Tanks 33 and 34 have inhalation dose potential (including 2 Sigma uncertainty) less than or equal to 2.0E+08 rem/gal by limiting sludge slurry solids wt% less than or equal to 16 and 8 wt% by sample respectively or by radiological sample analysis prior to the transfer.

4.3 TRANSFER PATH (TSR 5.8.2.21) (SAC)

ATTRIBUTE REQUIREMENT: 5.8.2.21.a,q,r

Prior to TRANSFER INITIATION, a determination of the TRANSFER PATH shall be performed. Implementing procedures shall address identification of sound isolation points as part of TRANSFER PATH determination. This evaluation shall identify the necessary PROCESS AREA(S) and LEAK DETECTION LOCATIONS needed to support the transfer. This evaluation will also ensure the transfer line segments associated with the TRANSFER PATH and piping downstream of the isolation point (excluding segments designated as Out-of-Service) has acceptable integrity prior to initiating the transfer. For CHEMICAL CLEANING TRANSFERS, the evaluation shall also include requirements provided as part of Section 4.28.

Prior to TRANSFER INITIATION through HDB-7, isolation (single leak-tested valve, double valve isolation, blank, or jumper removal) shall be established in HDB-7 to preclude waste from entering the Tank 50 Valve Box except during intended transfers from HDB-7 through the Tank 50 Valve Box.

Prior to TRANSFER INITIATION from Tank 50, isolation (single leak-tested valve, double valve isolation, or blank) shall be established in the Tank 50 Valve Box to preclude Tank 50 material from entering HDB-7 and HDB-8 [via the Effluent Treatment Project (ETP) DB].

Prior to TRANSFER INTIATION from Salt Waste Processing Facility (SWPF) To Tank 50, isolation (single leak-tested valve, double valve isolation or blank) shall be established in the Tank 50 Valve Box to preclude SWPF material from entering HDB-7 and HDB-8 (via ETP DB).

> TRANSFER PATHS are established for the planned movement of waste through the transfer system (excluding the venting and draining of transfer lines associated with a LOW-REM WASTE TRANSFER where there is no potential to siphon waste). The TRANSFER PATH is defined as a combination of the transfer lines whose primary containment constitutes a continuous liquid transfer flow path. The TRANSFER PATH begins at the plane where the transfer line exits primary containment (e.g., the waste tank / pump tank / evaporator pot wall) or at the jet for sump transfers. The TRANSFER PATH ends at the plane where the transfer line enters primary containment (e.g., the waste tank / pump tank / evaporator pot wall).
>
> Waste tank primary containment includes tank risers sufficiently open to the waste tank such that they do not have the potential for pluggage and overflow. The TRANSFER PATH includes all piping branches up to the first sound isolation point (e.g., closed valve, blank, dummy Hanford connector, evaporator clean out port [COP] blanks). Transfer lines that are not Out-of-Service are assumed to maintain their primary containment function up to an acceptable waste location (e.g., waste tank, pump tank). As an example, a diversion box downstream of the first sound isolation point of the TRANSFER PATH is not considered a LEAK DETECTION LOCATION for the TRANSFER PATH.

It is recognized that jumpers and connectors within secondary containments (e.g., valve boxes, diversion boxes, and tank risers) may experience minor leakage. As discussed in DSA Chapter 4, transfer line jumpers and connectors along a TRANSFER PATH are permitted to have "drip-wise" leakage. "Drip-wise" leakage shall not be a continuous flow of material or spray. "Drip-wise" leakage shall not exceed the initial (i.e., residual) waste volumes presented in DSA Chapter 3 within a 30-day period. "Drip-wise" leak can be determined as follows:

1. Determine the allowable leak volume using the residual waste volume of the LEAK DETECTION LOCATION in consideration from DSA Chapter 3, Table 3.4-1.

2. Calculate the maximum allowable leak rate by dividing the allowable leak volume (gallons) by the allowed 30 day duration. Assume a conversion factor of 20 drops per mL and express the allowable leak rate in units of drops per minute.

3. If the actual leak rate is less than the maximum allowable leak rate calculated in item 2, it can be considered "Drip-wise" leakage.

In certain LEAK DETECTION LOCATIONS, it is physically possible for a low flow-rate leak to drain out of the LEAK DETECTION LOCATION without accumulating sufficient depth of liquid to cause actuation of a credited leak detection device. In these cases, the potential downstream location for accumulation of the leaked waste will have the same leak detection requirements as the first LEAK DETECTION LOCATION.

An example of the above is FDB-3. This DB has a drain in the bottom of its sump, which directs waste to FDB-2. The drain in FDB-3 does not have a weir or similar device to ensure the accumulation of some minimal depth of liquid within FDB-3 before the liquid can drain to FDB-2. Thus, transfers through FDB-3 which require leak detection would require FDB-2 to be a LEAK DETECTION LOCATION.

Leak detection from a secondary containment is not considered and is not required per the DSA since it is a tertiary protection. As an example, leak detection box (MLDB-4) between FDB-3 and FDB-2 drain line is not required.

A further explanation for LEAK DETECTION LOCATIONS and the Safety Basis requirements placed on the locations is provided in Attachment-1, LEAK DETECTION LOCATIONS.

IMPLEMENTATION:

The TRANSFER PATH includes all piping branches up to the first sound isolation point (e.g., closed valve, blank, dummy Hanford connector, evaporator COP blanks). Blanks shall be qualified per ASME B31.3.

A primary containment waste location (waste tank, pump tank, evaporator pot) or another sound isolation point (e.g., closed valve, blank, dummy Hanford connector, evaporator COP blanks) downstream of the first sound isolation point shall also be identified. If the first sound isolation point is a blank, leak-tested valve or dummy Hanford connector, another sound isolation point or primary containment waste location is not required.

Only manually operated valves can be used for TRANSFER PATH determination since back-fit analysis (G-BFA-G-00034) was performed for manual valves only. However, if any pneumatic valves are seismically qualified for operability, it is acceptable to use them for TRANSFER PATH determination.

"Drip-wise" leak detection can be difficult if it is raining during the transfer due to rainwater intrusion. The Shift Manager and Shift Technical Engineer shall evaluate the conditions at the time (rate of increase in the secondary containment, transfer duration, etc.) and determine appropriate actions such as transfer shutdown, camera inspection, etc. The DSA did not credit structural integrity of evaporator system Jumpers in Evaporator Cells. Therefore, the drip-wise leakage limit is not applicable to evaporator operations.

DSA Section 3.4.1.5.2 lists inactive locations in which addition of waste into or WASTE TRANSFERS through are prohibited (transfers out are permitted). WASTE TRANSFERS into these locations and WASTE TRANSFERS through lines for which the locations are LEAK DETECTION LOCATIONS are prohibited (WASTE TRANSFERS out of these locations are permitted). These inactive locations shall be isolated from WASTE TRANSFERS by a single leak-tested valve, sound double valve isolation, or a blank.

Further TRANSFER PATH determination is not needed for the following evaporator transfer operations:

- Evaporator feed from the feed tank to the evaporator pot for 16H evaporator.
- Evaporator lift from the evaporator pot to the concentrate/vent tanks for 16H evaporator.
- Evaporator cell sump to the evaporator feed tank for 16H evaporator.

The TRANSFER PATH for 16H evaporator feed goes directly from the feed tank to the evaporator pot. The 16H Evaporator lift TRANSFER PATH goes directly from the evaporator pot to the concentrate/vent tanks through the associated Gravity Drain Line (GDL). Steam and air supply to alternate lift is blanked off when it is not in use. The 16H Evaporator cell sump jet TRANSFER PATH goes directly from the cell to the evaporator feed tank. For these TRANSFER PATHS all transfers are LOW-REM WASTE TRANSFERS (no LCO required LEAK DETECTION LOCATIONS), no other piping branches and no other primary

containment acceptable waste locations are in the path. Therefore, no further TRANSFER PATH determination is needed for these transfers.

For the TRANSFER PATHS discussed above for the 25H evaporator, all transfers are LOW-REM WASTE TRANSFERS (no LCO required LEAK DETECTION LOCATIONS). However, other piping branches and primary containments acting as acceptable waste locations are in the path. Therefore, independent verification of correct TRANSFER PATH alignment is required for the 25H evaporator associated transfers.

Following maintenance activities on a TRANSFER PATH component (valve, jumper, etc.) it may be necessary to transfer waste through the TRANSFER PATH instead of completing a leak test with water. It is acceptable to use waste to perform the leak test for declaring the TRANSFER PATH component OPERABLE if operational controls are implemented to minimize the risk of the TRANSFER PATH component inoperability leading to an accident. This is accomplished by having a camera inspection of the locations being leak checked during the transfer. If a greater than 'drip-wise' leak is spotted, the transfer shall be immediately stopped. Since this is part of declaring the TRANSFER PATH component OPERABLE, it is not required to be reported in ORPS. These actions are in compliance with LCO 3.0.5 for returning inoperable equipment to service. Once the component has successfully passed the leak check, the TRANSFER PATH component may be considered OPERABLE.

The WASTE TRANSFER definition per TSR Section 1.2 is as follows.

> "The planned movement of liquid waste along a TRANSFER PATH. This includes movement of waste caused by pumping, jetting, siphoning, or transfer jet/pump flushing activities (via jet entrainment or siphoning). If a transfer of water is known to have a waste siphon potential, the transfer shall be considered a WASTE TRANSFER. A transfer that originated as a non-waste transfer (at the time of TRANSFER PATH determination) does not have to be revised to a WASTE TRANSFER as a result of picking up contamination along the transfer route. If a transfer of non-waste is known to have a waste siphon potential, the transfer shall be considered a WASTE TRANSFER.
>
> Transfers from secondary containment sumps are considered to be WASTE TRANSFERS unless the sump contents have a sufficiently low inhalation dose potential that any release could not challenge the Evaluation Guidelines.
>
> Activities such as removal of contaminated rainwater in-leakage from inactive locations (stated in Administrative Control 5.8.2.43) are not considered to be WASTE TRANSFERS.
>
> Liquid transfers do not have to be considered WASTE TRANSFERS if the transfer stream can be demonstrated to meet the non-waste transfer criteria described in DSA Section 3.4.1.5.1.
>
> Examples of transfer streams that have been shown to not be WASTE TRANSFERS include a) transfers from the CST Facility (CSTF) to the Saltstone Facility, b) transfers from the ETP to CSTF, c) transfers of CSTF Evaporator Overheads to the ETP, and

d) transfers into Tank 50 which have inhalation dose potentials less than or equal to 2.09E+05 rem/gal. Transfers from CSTF to the Saltstone Facility shall comply with the Waste Acceptance Criteria and with Administrative Control 5.8.2.47.

Venting and draining of transfer lines associated with a LOW-REM WASTE TRANSFER where there is no potential to siphon waste are not considered a WASTE TRANSFER. However, venting and draining of transfer lines associated with a HIGH-REM WASTE TRANSFER is considered a WASTE TRANSFER.

In addition to the WASTE TRANSFER TSR definition, the following guidance is provided by the TSR for sump transfers. Transfers out of sumps associated with the TRANSFER PATH of a HIGH-REM WASTE TRANSFER shall be assumed to be HIGH-REM WASTE TRANSFERS (unless the liquid is shown to have inhalation dose potential less than 2.0E+08 rem/gal). Transfers out of these sumps at other times shall be assumed to be LOW-REM WASTE TRANSFERS, unless the sump contents have a sufficiently low inhalation dose potential that any release could not challenge the Evaluation Guidelines.

Simultaneous transfers with sound single valve isolation between them are permitted. This practice is acceptable since transfer events will be independently monitored by the material balance for each transfer.

For CONTINGENCY TRANSFERS, the flexible hose-in-hose is not required to be seismically qualified though it is not expected to leak in a Seismic Event. The risk of allowing waste to leak from a waste tank and remain in the annulus is judged more significant than the risk of failure of the Contingency Transfer System hose-in-hose transfer line during a Seismic Event (See DSA Section 3.4.2.18.1 SCENARIO DEVELOPMENT - *Transfers Lines*).

<u>Implementation Items</u>:

1. Prior to TRANSFER INITIATION, determine the TRANSFER PATH based on all piping branches up to the first sound isolation point (e.g., closed valve, blank, dummy Hanford connector, evaporator COP blanks). Also identify the primary waste containment waste location (e.g., waste tank, pump tank) or another sound isolation point downstream of the first sound isolation valve. If the first sound isolation point is a blank, leak-tested valve, or dummy Hanford connector, another sound isolation point or primary containment waste location is not required.

2. Deleted.

3. All PROCESS AREAS and LEAK DETECTION LOCATIONS needed to support the transfer shall be identified. All identified leak locations shall comply with the requirements of transfer related LCOs 3.7.1, 3.7.2, 3.7.3, 3.7.4, 3.7.5, 3.7.7, 3.7.10, 3.7.11, 3.7.12, 3.7.14 and/or 3.8.6.

4. The transfer procedure shall include the line/segment/CLI numbers associated with the TRANSFER PATH and piping downstream of the first sound isolation point up to the second sound isolation point or PROCESS AREA. If the first sound isolation point is a blank, leak-tested valve, or dummy Hanford connector, line/segment/CLI numbers associated with piping downstream of the first sound isolation point are not required.

5. Verify the structural integrity (seismic qualification) of the transfer lines along the TRANSFER PATH and piping downstream of the first sound isolation point up to the second sound isolation point or PROCESS AREA using the CST Master Equipment List (MEL) or Asset and Information Management (AIM) database or Smart Plant Foundation (SPF) during the transfer procedure development. If the first sound isolation point is a blank, leak-tested valve, or dummy Hanford connector, verification of structural integrity of piping downstream of the first sound isolation point is not required.

6. Identify any excavations along the TRANSFER PATH and piping downstream of the first isolation point up to the primary waste containment location (e.g., waste tank, pump tank) or another sound isolation point prior to transfer. Verify that the transfer lines in the excavation are evaluated for structural integrity and document the transfer lines are seismically qualified. If the first sound isolation point is a blank, leak-tested valve, or dummy Hanford connector, the identification of excavations downstream of the first sound isolation point is not required.

7. The transfer procedure shall verify that the line/segment/CLI numbers associated with the TRANSFER PATH and piping downstream of the first sound isolation point up to the second sound isolation point or PROCESS AREA are tested as prescribed by the Structural Integrity Program (TSR AC 5.8.2.12) prior to initiating the transfer. If the first sound isolation point is a blank, leak-tested valve, or dummy Hanford connector, verification of line/segment/CLI numbers associated with piping downstream of the first sound isolation point is not required.

8. When FDB-4 is on the TRANSFER PATH and requires leak detection instrumentation, FPP-2 shall be identified as a LEAK DETECTION LOCATION since FDB-4 drains to FPP-2 prior to being detected in FDB-4.

9. When FDB-3 is identified as a LEAK DETECTION LOCATION, FDB-2 and FPP-1 shall be also identified as LEAK DETECTION LOCATIONS since FDB-3 could drain to FDB-2 and FPP-1 prior to being detected in FDB-3.

10. When FDB-2 is identified as a LEAK DETECTION LOCATION, FPP-1 shall be also identified as LEAK DETECTION LOCATION since FDB-2 could drain to FPP-1 prior to being detected in FDB-2.

11. When HDB-2 is identified as a LEAK DETECTION LOCATION, HPP-3 shall be also identified as a LEAK DETECTION LOCATION since HDB-2 could drain to HPP-3 prior to being detected in HDB-2.

12. When a transfer line is designated as Out-of-Service, ensure that it is isolated from a waste TRANSFER PATH by a single leak-tested valve, sound double valve isolation, or a blank.

13. Inactive locations as specified in TSR Administrative Control 5.8.2.43.a shall be isolated from WASTE TRANSFERS by a single leak-tested valve, sound double valve isolation, or a blank.

14. When Tank 49 Valve Box is identified as a LEAK DETECTION LOCATION, the LDB Drain Cell shall be identified as a LEAK DETECTION LOCATION since Tank 49 Valve Box could drain to the LDB Drain Cell prior to being detected in Tank 49 Valve Box.

15. Prior to TRANSFER INITIATION through HDB-7, isolation shall be established in HDB-7 (single leak-tested valve, double valve isolation, blank or jumper removal) to preclude waste from entering the Tank 50 Valve Box except during intended transfers from HDB-7 to the Tank 50 Valve Box.

16. Prior to TRANSFER INITIATION from Tank 50, isolation shall be established in the Tank 50 Valve Box (single leak-tested valve, double valve isolation or blank) to preclude Tank 50 material from entering the HDB-7 and HDB-8 (via ETP Diversion Box).

17. Prior to TRANSFER INITIATION from SWPF to Tank 50, isolation shall be established in the Tank 50 Valve Box (single leak-tested valve, double valve isolation or blank) to preclude SWPF material from entering the HDB-7 and HDB-8 (via ETP Diversion Box).

4.4 SUBMERSIBLE BLENDER PUMP (SBP) OPERATION (TSR 5.8.2.58) (SAC)

ATTRIBUTE REQUIREMENTS: 5.8.2.58.a,b

The suction of the SBP shall be a minimum of 152 inches from the sludge layer during SBP operation.

The speed of the SBP shall be less than or equal to 860 rpm during SBP operation.

Additional controls shall be implemented as necessary to minimize the amount of sludge solids in suspension during SBP operation based on evaluation of the following phenomena:

- Tank agitation
- Effects of receiving WASTE TRANSFERS

IMPLEMENTATION:

The SBP Operation Program ensures the entrained waste has less than or equal to 1 wt% sludge solids and protects assumed initial conditions during SBP operation.

Sludge levels can be determined by measurement, visual inspection, or by engineering evaluation. Engineering shall identify the selected methodology.

When selected, engineering evaluation for sludge level determination shall address the following attributes, as applicable:

- Process knowledge (e.g., transfer history, operational conditions)
- Historical sludge level determination
- Waste tank sample results
- Uniformity of the solids level

In order to keep the entrained sludge solids less than or equal to 1 wt%, no WASTE TRANSFERS will be received during the SBP operation.

The speed of the SBP shall be less than or equal to 860 rpm during SBP operation. VFD speed check shall be performed prior to SBP operation. This check requires second person verification.

Implementation Items:

1. Prior to SBP operation, verify that SBP suction is greater than 152” above the sludge layer.
2. Prior to SBP operation, verify that no WASTE TRANSFERS are being received.

3. Verify that SBP is not operating prior to receiving WASTE TRANSFERS into a waste tank with SBP.

4. Prior to SBP operation, verify VFD maximum speed setting is less than or equal to 860 rpm.

5. Prior to SBP operation, a second person verification of VFD maximum speed setting of 860 rpm is required.

4.5 INDEPENDENT VERIFICATION OF CORRECT TRANSFER PATH ALIGNMENT (TSR 5.8.2.21) (SAC AS NOTED)

ATTRIBUTE REQUIREMENTS: 5.8.2.21.f,m

Prior to TRANSFER INITIATION, independent verification of correct TRANSFER PATH alignment shall be completed. After initiating the transfer, use of correct motive force shall be independently verified. This attribute is applicable to CONTINGENCY TRANSFERS also.

Prior to jetted TRANSFER INITIATION, independent verification of jet discharge path valves being open shall be completed (for jets with a 3-way valve, valve position will be in the discharge or receipt position, as applicable). Verification of jet discharge path being open is a SAC.

> DSA Section 3.4.1.5 states general CSTF inputs & assumptions and Section 3.4.1.5.6 lists the general controls required to protect general assumptions upon which the accident analyses calculations are based on. Independent verification of correct TRANSFER PATH alignment is one of the general controls listed in DSA Section 3.4.1.5.6 and needs to be protected.
>
> Verification of the jet discharge path being open prevents certain accidents associated with jetted transfers (e.g., aerosolization events). The jet discharge path can be closed during water flushing of the jet.

IMPLEMENTATION:

This administrative control is applicable to all WASTE TRANSFERS.

TRANSFER PATH alignment verification can be performed by verifying valves are in the open position between the transferring location and receiving location. Sound isolation valves in the closed position in the TRANSFER PATH can be verified by reviewing system alignment checklists since system alignment checklists are independently verified. Independent verification can be performed by a second person (separated by time and distance), camera verification or peer verification.

Independent verification of correct motive force can be performed by a second person (separated by time and distance) or peer verification. Methods of independent verification can be prime-mover switch position, prime-mover "run" indicator light, level changes in transfer and/or receiving location, etc. Independent verification of motive force shall be performed for all WASTE TRANSFERS, including the flushing of transfer jets from the Gang Valve (due to the potential to move waste out of the PROCESS AREA boundary) except in the case where the WASTE TRANSFER is due to a siphon potential (flush water pumps during flushing, leak checking, etc.).

Some transfers (sump transfers, evaporator cell sump operations, evaporator gang valve operations for flushing GDLs & Vent lines and pot siphon, flushing pump tank jets) are short in duration and may not last long enough to be able to perform independent verification by a second person (separated by time and distance). Therefore, these transfers motive force independent verification can be performed by the same person by verifying another parameter of the transfer such as level decrease from the sump or level increase in the receiving location, etc. If the verification cannot be performed promptly, the sump transfer shall be stopped.

For TRANSFER PATHS that require no valving (dedicated line [e.g., Evaporator Recycle Transfers]), the TRANSFER PATH is defined during the technical review process and is integral to the procedure content (flow path, siphon evaluation, etc.) Design prints are used to define the TRANSFER PATH, including jet orientation. The SR/QR of the technical review accomplishes the IV for the design feature(s) (e.g., jet orientation, jumper installation) of the TRANSFER PATH, meeting the requirements of TSR AC 5.8.2.21.f as it applies to TRANSFER PATH alignment. Changes to plant design follow the E7 Manual and would recognize procedure impacts during the technical review for the planned modification. A step in the transfer procedure for these dedicated line(s) (and associated IV) is NOT required to meet this control.

Independent verification of correct TRANSFER PATH alignment is not needed for the following evaporator transfer operations:

- Evaporator feed from the feed tank to the evaporator pot for 16H evaporator.
- Evaporator lift from the evaporator pot to the concentrate/vent tanks for 16H evaporator.
- Evaporator cell sump to the evaporator feed tank for 16H evaporator.

The TRANSFER PATH for 16H evaporator feed goes directly from the feed tank to the evaporator pot. The 16H Evaporator lift TRANSFER PATH goes directly from the evaporator pot to the concentrate/vent tanks through the associated Gravity Drain Line (GDL). Steam and air supply to alternate lift is blanked off when it is not in use. The 16H Evaporator cell sump jet TRANSFER PATH goes directly from the cell to the evaporator feed tank. For these TRANSFER PATHS all transfers are LOW-REM WASTE TRANSFERS (no LCO required LEAK DETECTION LOCATIONS), no other piping branches and no other primary containment acceptable waste locations are in the path. Therefore, independent verification of correct TRANSFER PATH alignment is not needed for these transfers.

For the TRANSFER PATHS discussed above for the 25H evaporator, all transfers are LOW-REM WASTE TRANSFERS (no LCO required LEAK DETECTION LOCATIONS). However, other piping branches and primary containments acting as acceptable waste locations are in the path. Therefore, independent verification of correct TRANSFER PATH alignment is required for the 25H evaporator associated transfers.

Performing the independent verification of correct motive force within 30 minutes will ensure that the transfer error will be detected prior to reaching 15,000 gallons maximum missing waste.

Implementation Items:

1. Transfer procedures shall include IV of correct TRANSFER PATH alignment (e.g., valves in the open position between the transferring location and receiving location, sound isolation points in the TRANSFER PATH) prior to initiation of the transfer. This item is not required for 16H evaporator transfer operations.

2. Transfer procedures shall include IV of starting of the correct motive force within 30 minutes of the TRANSFER INITIATION.

3. For short duration transfers (sump transfers, evaporator cell sump operations, evaporator gang valve operations for flushing GDLs & Vent lines and pot siphon, flushing pump tank jets), correct motive force verification can be performed by the same person by verifying another parameter such as sump level decrease, etc. If the verification cannot be performed promptly, the sump transfer shall be stopped.

4. Flushes of a transfer jet from the Gang Valve shall include verification of the correct motive force within 30 minutes of the TRANSFER INITIATION.

5. Prior to jetted TRANSFER INITIATION, independent verification of jet discharge path valves being open shall be completed. For jets with a 3-way valve, valve position will be in the discharge or receipt position, as applicable.

4.6 SIPHON EVALUATION (TSR 5.8.2.21)

ATTRIBUTE REQUIREMENT: 5.8.2.21.e

Prior to transfer initiation, a siphon evaluation shall be performed prior to any WASTE TRANSFER. The evaluation shall identify the potential for siphons and identify methods/ equipment needed to stop siphons.

The transfer system in both H and F Tank Farms consists of transfer lines that interconnect waste tanks, pump tanks, diversion boxes, pump pits, and valve boxes. Due to changes in elevations (flow from higher level to a lower level) along a given transfer route, there is a potential for a siphon to occur after the prime mover is stopped (Reference 8). This can occur due to submerged inlet down-comers which have no vent opening above the liquid level or due to a submerged transfer jet or transfer pump which has either no siphon break or has a siphon break that may be plugged. Siphons may also occur to or from a leaking or left open single valve isolating tanks depending on the specific physical elevation and piping configuration.

When a siphon occurs, the Control Room Operator typically has no direct/automatic method to immediately stop the liquid movement. Generally, field work (e.g., closing a diversion box valve or loosening the jet connector) is required to stop or break the siphon. The time necessary to recognize a siphon is occurring, determine the appropriate method(s) to stop or break the siphon, obtain any necessary tools, and perform the necessary field work could result in waste being released above-ground. Therefore, it is necessary to include instructions for stopping and breaking the siphon in a procedure and to stage any required equipment.

Siphon evaluations are not required for CONTINGENCY TRANSFERS because the only flow path for CONTINGENCY TRANSFERS is directly between the waste tank annulus and the waste tank vapor space.

Siphon evaluations are not required for TCCR TRANSFERS.

IMPLEMENTATION:

All transfer routes with the exception of sump transfers and transfers out of the evaporators, with a siphon potential shall have a valve in the siphon path available to stop the siphon liquid flow or a procedural contingency to break the siphon is required if a valve is not available. In addition to the valve that can stop the siphon, the capability to vent the siphon flow path at an elevation higher than the level in the tank being siphoned from (e.g., passive siphon break located at least 2 inches higher than the tank High Liquid Level Conductivity Probe (HLLCP) setpoint, vent path to a vented location, ability to break the jet connector heads at both nozzles) is required to break the siphon. The methods to 1) stop, and/or 2) break, any potential siphon shall be identified in the siphon evaluation and specified in the transfer procedure. Any required equipment (e.g., valve T-handle, connector head wrench) shall be staged prior to the transfer and available during the transfer. Sump transfers and leak checks of jumper nozzle connections typically do not have valves to stop the siphon. Since sump transfers are small in volume, the sump transfer

procedures can preclude siphon potential by other methods such as controlling the receiving tank levels when a valve is not available. Transfers out of the evaporators are not initiators to a waste tank overflow accident and therefore do not require Safety Significant devices to stop the transfers and siphons. If a passive siphon break and a closed valve exist in the unintended path, it can be considered to have no siphon potential from that tank since it requires double failure of both the siphon break and the closed isolation valve to initiate the siphon. If a passive siphon break along with a closed isolation valve is used to eliminate the siphon potential, the siphon break location shall be at least 2 inches higher than the tank HLLCP setpoint. Two inches above the HLLCP setpoint will account for the setpoint uncertainties. Pneumatic valves can only be identified to stop the siphon if they are seismically qualified for operability. Stopping an unintended siphon shall be completed as soon as practical based on plant conditions through the use of the appropriate transfer procedure. Once the siphon has been stopped the need for a rapid response is no longer required, thus the breaking of the siphon is not time dependent.

Implementation Items:

1. Perform and document the siphon evaluation for intended transfer.

2. Provide instructions in the transfer procedures to stop or break the siphon and to stage the equipment needed to stop the siphon as required.

3. If a passive siphon break along with a closed valve is used to eliminate the siphon potential from a tank, or is credited to vent and break a potential siphon from a tank, verify that the passive siphon break is located at least 2 inches above the HLLCP setpoint.

4.7 TRANSFER PUMP SPEED EVALUATION (TSR 5.8.2.21)

ATTRIBUTE REQUIREMENT: 5.8.2.21.e

Prior to transfer initiation, a transfer pump speed evaluation shall be performed. The evaluation shall identify the potential for over-pressurization of the Transfer Path (exceeding system design pressure) or exceedance of Transfer Path flow rate limitations and identify methods/equipment needed to prevent the identified potential.

A Variable Frequency Drive (VFD) speed setting (or operating speed for single Speed pump) check shall be performed prior to any liquid transfer using a transfer Pump. The check shall ensure that the maximum speed setting /operating speed is less than or equal to the value allowed to protect the most limiting of the following:

- Ensure system design pressure (or pressure permitted by an approved engineering evaluation) is not exceeded (excluding TCCR TRANSFERS as defined in DSA section 3.4.1.5.1).

- Ensure flow rate is less than or equal to 360 gallons per minute (gpm) at the first above-ground leak location (the point of lowest system resistance that results in leakage outside the tank, assuming a guillotine break of the piping), less than or equal to 220 gpm for TCCR TRANSFERS.

- Ensure flow rate is less than or equal to 250 gpm for the intended Transfer Path (assuming intact path) (excluding TCCR TRANSFERS as defined in DSA section 3.4.1.5.1).

This attribute is also applicable to CONTINGENCY TRANSFERS and TCCR TRANSFERS.

Some of the transfer pumps are equipped with Variable Speed/Variable Frequency Drives (VSD/VFD) or Adjustable Frequency Drive (AFD). These drives could produce transfer line pressures higher than the design pressure of the transfer system piping, if the pump speed exceeds the maximum setting and the transfer line is blocked. Therefore, transfer pump speed evaluation of the TRANSFER PATH shall be performed prior to any liquid transfer involving pumps. The evaluation shall determine the maximum pump speed setting (or operating speed for single speed pump) to ensure the design pressure for the transfer piping system (or pressure permitted by an approved engineering evaluation) is not exceeded. It shall also be acceptable to perform a one-time engineering evaluation/calculation which determines that over-pressurization and exceeding the maximum flow rates is not possible for a pump/pump drive combination.

Also transfer pump speed shall be set to limit the system flow rate (assuming intact path) to 250 gpm for waste tank transfer pumps to meet the DSA Section 3.4.1.5.2 requirement of 15,000 gallons maximum missing waste and detection/response time of 60 minutes.

For transfer pump flow rates, 360 gpm represents the highest allowable flow rate in an above-ground (or excavated) transfer line. The maximum speed for transfer pumps, calculated at the first above-ground leak location (the point of lowest system resistance that results in leakage outside the tank, assuming a guillotine break of the piping) prevents exceeding this flow rate. For pumps with Variable Frequency Drives (VFDs), the maximum transfer pump speed relies on limiting the speed on the VFD and verifying the speed setting is correct and functional prior to initiating the transfer. Single speed pumps that have no VFD, must meet the 360 gpm criteria at the pump operating speed. The transfer pump speed setting check is performed per this PDD. The 360 gpm is calculated based on the transfer pump location, such that the elevation difference from the pump to the break location is considered. The 360 gpm flow rate is protected at the first above-ground break location.

Transfer jet flow rate is highly dependent on plant conditions, including jet submergence, specific gravity of material being transferred, and steam supply pressure. In general, transfer jets have a flow rate less than transfer pumps, and significantly below transfer path flow rate limitations. The normal steam supply pressure to transfer jets is such that the transfer system design pressure will not be exceeded. Therefore, no evaluation is required for flow rate limitations or over-pressurization potential of the transfer path for jetted transfers.

Reference 28 evaluated Inhibited Water (IW) and Flush Water (FW) system pumps that can exceed transfer system design pressure. Based on this evaluation, operation of these pumps is acceptable and will not cause over-pressurization of the transfer system (pressures are within code allowable).If the required VFD speed setting (or operating speed for single speed pump) could cause the transfer system design pressure to be exceeded, an engineering evaluation shall be completed and provided to DOE.

For TCCR TRANSFERS, a VFD speed setting check shall be performed prior to liquid transfers using the transfer pump. The check shall ensure that the maximum speed setting is less than or equal to the value allowed to ensure the flow rate is less than or equal to 220 gpm at the first above-ground leak location (the point of lowest system resistance that results in leakage outside the tank, assuming a guillotine break of the piping).

The flow rate limit is not required for pump tanks due to limited volume of the pump tanks and incoming flow rates.

IMPLEMENTATION:

The following methodology shall be used for transfer system over-pressurization evaluation and maximum pump speed setting:

1. Determine ASME Code design pressure (or pressure permitted by an approved engineering evaluation) of the piping system.

2. Calculate maximum design pressure head in ft. based on the piping code pressure and pumped fluid and static head in ft. (elevation).

3. Calculate maximum pump speed (rpm) that develops pump shut-off head equal to the allowable design pressure head (ft) in item 2 using pump curves.

4. Calculate the transfer pump speed to limit the maximum system flow rate (assuming intact path) to 250 gpm for all waste tank transfer pumps.

5. Calculate the pump speed to limit the maximum flow rate to 360 gpm (220 gpm for TCCR TRANSFERS) at the first above ground (or excavated) leak location (the point of lowest system resistance that results in leakage outside the tank, assuming a guillotine break of the piping) for waste tank transfer pumps.

6. For pump tank transfer pumps, set the VFD/VSD/AFD maximum speed lower than or equal to the calculated maximum pump speed in item 3.

7. For waste tank transfer pumps, set the VFD/VSD/AFD maximum speed setting lower than or equal to the pump speeds calculated in items 3, 4, and 5 whichever is smaller.

8. Verify that the VFD/VSD/AFD maximum speed setting is lower than or equal to the maximum pump speed in items 6 or 7 prior to the transfer.

9. Verify the VFD/VSD/AFD maximum speed setting by attempting to ramp up beyond the maximum speed (challenge test) prior to the transfer.

10. If the transfer pump speed evaluation concludes that over-pressurization and maximum flow rate (as applicable) will not occur at any setting, then verification of VFD/VSD/AFD maximum speed setting is not required.

11. If the required VFD speed setting (or operating speed for single speed pump) could cause the transfer system design pressure to be exceeded, an engineering evaluation shall be performed and provided to DOE.

12. Reference 37 evaluated the potential for over-pressurization of F-Tank Farm waste transfer lines during H-Tank Farm to F-Tank Farm waste transfers. Based on this evaluation the following requirements shall be implemented during the H-Tank Farm to F-Tank Farm waste transfers to not exceed the F-Area Transfer lines ASME B31.3 over-pressure allowance:

    a. HPT-7 transfer pump VFD maximum speed is limited to 2470 rpm during H-Tank Farm to F-Tank Farm Inter-area waste transfers to not exceed ASME B31.3, 133% over-pressure allowance during dead head conditions.

    b. Waste Transfer System Design Authority to track and monitor total hours of F-Tank Farm waste transfer lines exceeding design pressure via System Health Report to ensure compliance with ASME B31.3 section 302.2.4

c. H-Tank Farm to F-Tank Farm Inter-area waste transfer procedures shall include a step that if the transfer was shut down due to a pump dead-head condition, then notify the Waste Transfer System Design Authority Engineer for evaluation of potential system over-pressurization.

Implementation Items:

1. A transfer pump speed setting evaluation shall be performed for all intended liquid transfers using transfer pumps to ensure transfer system design pressure and applicable maximum flow rates are not exceeded. If the required VFD speed setting could cause the transfer system design pressure to be exceeded, an engineering evaluation shall be performed and provided to DOE.

2. If applicable, verify that the VFD/VSD/AFD maximum speed setting is lower than or equal to the over-pressurization or maximum flow rate (waste tanks) speed prior to the transfer (i.e., verification of VFD/VSD/AFD program maximum speed parameters).

3. If applicable, verify the VFD/VSD/AFD maximum speed setting by attempting to ramp up beyond the maximum speed (challenge test) prior to the transfer.

4. HPT-7 transfer pump VFD maximum speed is limited to 2470 rpm during H-Tank Farm to F-Tank Farm Inter-area waste transfers to not exceed ASME B31.3, 133% over-pressure allowance during dead head conditions.

5. Waste Transfer System Design Authority to track and monitor total hours of F-Tank Farm waste transfer lines exceeding design pressure via System Health Report to ensure compliance with ASME B31.3 section 302.2.4

6. H-Tank Farm to F-Tank Farm Inter-area waste transfer procedures shall include a step that if the transfer was shut down due to a pump dead-head condition, then notify the Waste Transfer System Design Authority Engineer for evaluation of potential system over-pressurization.

4.8 CORE PIPE PLUGGAGE DUE TO SALT SOLIDS FORMATION (TSR 5.8.2.21) (SAC)

ATTRIBUTE REQUIREMENT: 5.8.2.21.n

Prior to jetted TRANSFER INITIATION from waste tanks or pump tanks where the possibility of core pipe pluggage due to salt precipitation exists, a sufficient flush (or drain) to prevent pluggage of the core pipe shall have been completed. Flushing is not required for subsequent jetted TRANSFER INITIATION if the suspension time is within the requirements of the engineering evaluation (evaluation shall include the amount of time the transfer may be suspended before flushing is required).

> DSA Sections 3.4.2.10 and 3.4.2.13 credit this control to prevent aerosolization and waste tank/pump tank overheating events during jetted WASTE TRANSFERS. An evaluation of core pipe pluggage due to salt solids formation is required if the jet transfer out of a salt waste tank is performed. The evaluation shall include the maximum amount of elapsed time that the transfer may be suspended before flushing is required if pluggage is a possibility.

IMPLEMENTATION:

Salt-out evaluations will be performed for all waste tank and pump tank jet transfers to assess the possibility of core pipe pluggage due to salt solids formation if the transfer is shutdown. The evaluation will be performed per the methodology outlined in Reference 17. The salt-out evaluation will be based on the conditions of the supernate in the sending tank (chemical composition and temperature). The solubility of major salt species in the sending tank supernate will be used to assess the potential for salt-out. If the potential for salt-out exists, heat transfer rates between the transfer line and its surroundings will be utilized in order to determine how long the transfer can be shutdown before flushing must be initiated.

This requirement is not applicable to sump jet transfers.

During the performance of a transfer line flush associated with a transfer with a salt-out potential, assurance that the flush water is being routed to the appropriate TRANSFER PATH shall be achieved through positive confirmation of a level change in the receipt vessel consistent with the derived flush volume. For situations where the required volume of the flush is such that the measuring device may not indicate an adequate change in level (e.g., small volume flush to a waste tank), the following items shall be performed to ensure flush completion:

- Initial flush water valve position verification can be performed using the respective flush water system's alignment checklist. Subsequent flush water valve positioning is controlled in accordance with the corresponding procedure. Flush water valve(s) in the defined TRANSFER PATH shall be independently verified.

- Confirm the level change in the sending vessel is consistent with the derived flush volume.

Piping branches off of the Transfer Path which did not have direct transfer flow through them (e.g., piping dead legs) are not required to have direct flush flow through them during flushing requirements. See Section 5.5.4.2.21 of the DSA for justification.

Implementation Items:

1. Perform a salt-out evaluation for jet transfers out of a waste tank or a pump tank to determine the potential for salt precipitation and core pipe pluggage potential.

2. If the evaluation determines that a pluggage potential exists for a jet transfer out of a waste tank or pump tank, ensure that the transfer procedure includes the requirements identified by the evaluation.

3. Implement the requirements identified by the evaluation by performing either item a OR items b.1 and b.2:

   a. During the performance of a transfer line flush associated with a salt-out potential transfer, assurance that the flush water is being routed to the appropriate TRANSFER PATH shall be achieved through positive confirmation of a level/volume increase in the receipt vessel consistent with the derived flush volume.

   OR

   b.1. During the performance of a transfer line flush associated with a salt-out potential transfer, assurance that the flush water is being routed to the appropriate TRANSFER PATH shall be achieved through positive confirmation of a level/volume decrease in the sending vessel consistent with the derived flush volume.

   AND

   b.2 Initial flush water valve position verification can be performed using the respective flush water system's alignment checklist. Subsequent flush water valve positioning is controlled in accordance with the corresponding procedure. Flush water valve(s) in the defined TRANSFER PATH shall be independently verified.

4.9 WATER HAMMER EVALUATION (TSR 5.8.2.21)

ATTRIBUTE REQUIREMENT: 5.8.2.21.e

Prior to transfer initiation, a water hammer evaluation shall be performed. This evaluation shall identify the potential for water hammer and identify methods/equipment needed to prevent water hammer. This attribute is applicable to CONTINGENCY TRANSFERS.

> Waste handling in the CSTF requires multiple transfers of liquid solutions or slurries containing radioactive waste. Waste is transferred between various PROCESS AREAS through transfer facilities (e.g., DBs, VB, HPFP, Pump Tanks). During transfers, water hammer may occur and could damage the transfer line core piping. Core piping integrity is credited for various accident analyses. A water hammer evaluation shall be performed for all WASTE TRANSFERS. It shall also be acceptable to perform a one-time engineering evaluation/calculation which determines the potential for water hammer and identifies methods and/or equipment needed to prevent its occurrence.

IMPLEMENTATION:

The methodology outlined in report M-ESR-S-00015 (Reference 21) or alternate engineering evaluation shall be used to determine the water hammer potential and any recommendations such as draining the transfer lines, high point venting and transfer pump start/restart criteria to prevent water hammer.

Implementation Items:

1. Perform and document the water hammer evaluation for the intended transfer consistent with the methodology in M-ESR-S-00015 (Reference 21) or alternate engineering evaluation.

2. Implement any actions such as draining the transfer lines, high point venting and transfer pump start/restart criteria identified in the water hammer evaluation to prevent the water hammer in the transfer procedures.

4.10 TANK RISER LEAK DETECTION (TSR 5.8.2.21) (SAC)

ATTRIBUTE REQUIREMENT: DSA Section 5.5.4.2.21.2.2

An evaluation for tank riser leak detection shall be performed for the associated TRANSFER PATH for HIGH-REM WASTE TRANSFERS. This evaluation shall be based on the availability/adequacy of the tank riser drain (i.e., drain/riser design is such that the riser will not overflow even in the event of a complete line break). The identified LEAK DETECTION LOCATIONS shall comply with the requirements of LCO 3.7.10.

> A loss of primary containment or incorrect transfer of waste could result in a transfer error event. The secondary containment identified in the Hazards Analysis as potential transfer error locations include waste tank annuli, DBs, VB, drain VB, PPs, catch tanks, the HPFP, LDB Drain Cell, waste tank transfer pump/jet risers, transfer line jackets, transfer line encasements, LDBs, MLDBs, and LPSs. Some waste tank transfer pump/jet risers are open at the bottom or have large drains, which excludes them from being potential transfer error locations. For these locations, a leak can be shown to not build up and plug the drain holes.

IMPLEMENTATION:

For HIGH-REM WASTE TRANSFERS, the waste tank transfer pump/jet risers that do not have adequate drain capacity shall be considered as LEAK DETECTION LOCATIONS and the leak detection equipment requirements of LCO 3.7.10 shall be followed. An evaluation of the drain adequacy shall be performed and documented. The evaluation shall ensure that the riser design will not allow the overflow even in the event of a complete line break in order to exclude it from being considered a LEAK DETECTION LOCATION. The methodology for the evaluation shall be that the calculated drainage flow rate be greater than the maximum pump/jet flow rate in the riser (examples: M-CLC-H-02172 for Tank 24 north riser, M-CLC-F-00688 for Tank 7 riser 4 and M-CLC-F-00790 for Tank 18 northeast riser).

Implementation Items:

1. When a tank jet/pump riser is in the TRANSFER PATH for a HIGH-REM WASTE TRANSFER, an evaluation shall be performed to determine whether it needs to be considered as a LEAK DETECTION LOCATION. If the riser shall be included as a LEAK DETECTION LOCATION for the HIGH-REM WASTE TRANSFER, it shall comply with the requirements of LCO 3.7.10.

2. If the evaluation in item 1 determines that the jet/pump riser is a LEAK DETECTION LOCATION for the HIGH-REM WASTE TRANSFER, the transfer procedure shall include the tank riser conductivity probe in accordance with LCO 3.7.10.

4.11 TRANSFER ISOLATION VALVE EVALUATION (TSR 5.8.2.21) (SAC)

ATTRIBUTE REQUIREMENT: DSA Section 5.5.4.2.21.2.11

Prior to each HIGH-REM WASTE TRANSFER, an evaluation of the associated transfer isolation valves shall be performed to ensure that the ability to stop transfers is maintained. If the isolation valve for a transfer has a Teflon seat, the evaluation shall include what, if any, additional measures need to be taken.

> Waste handling in the CSTF requires multiple transfers of liquid solutions or slurries containing radioactive waste. Waste is transferred between various PROCESS AREAS through transfer facilities (e.g., DBs, VBs, HPFP, Pump Tanks). Each transfer may go through several valves in various PROCESS AREAS to get to the intended location. There could be multiple ways to isolate the transfer from events such as siphon, transfer error, overflow, etc. For a HIGH-REM WASTE TRANSFER, an evaluation of the selected isolation valve shall be performed to ensure that it will isolate the transfer as required. Some of the valves in Tank Farms have Teflon components such as valve seats. Teflon does not have a high radiation resistance and is thus subject to degradation in the presence of a sustained high radiation field. The Teflon in these valves can swell and crack to a degree that could prevent the valve from being manipulated to a closed position. If the selected valve has a Teflon seat, an evaluation shall be performed. This evaluation shall consider the material being transferred in terms of dose potential to the Teflon parts and the expected duration of the transfer. These two considerations would establish the expected integrated dose to the Teflon parts which could then be compared to the damage threshold exposure dose level for Teflon. If this threshold were challenged, then perform the following to bring the integrated dose below the threshold level:
>
> 1. Limit integrated dose by limiting the transfer volume or reduce the dose potential, OR
>
> 2. Pick a new transfer route, OR
>
> 3. Pick a different valve, OR
>
> 4. Replace the Teflon parts or the valve.

IMPLEMENTATION:

Transfer isolation valves are located in various transfer facilities (e.g., DBs, VBs, HPFP, Pump Pits). These valves shall be listed in the CST MEL database. The database shall identify which valves are equipped with Teflon seats. If a Teflon seat valve is required for a HIGH-REM WASTE TRANSFER as an isolation valve, an evaluation will be performed and any compensatory measures required will be implemented.

Implementation Items:

1. For HIGH-REM WASTE TRANSFERS, identify the isolation valves to stop the flow to mitigate transfer events such as overflow or siphon.

2. If the required isolation valves for the HIGH-REM WASTE TRANSFER have Teflon seats, perform an evaluation for its acceptability and/or identify any compensatory/corrective measures.

3. Implement the compensatory/corrective measures identified in item 2.

4.12 SECOND ISOLATION DEVICE (TSR 5.8.2.21)

ATTRIBUTE REQUIREMENT: 5.8.2.21.i & DSA Section 5.5.4.2.21.2.12

Prior to TRANSFER INITIATION of a HIGH-REM WASTE TRANSFER, procedures shall identify two physically separated functional transfer isolation devices, each capable of stopping the transfer. The transfer isolation devices shall be sufficiently separated (by distance) such that the availability of one isolation device is maintained.

> Section 4.14 of this PDD requires an isolation device to stop the prime mover for all transfers. For HIGH-REM WASTE TRANSFERS, a second isolation device is required. These two isolation devices shall be separated by distance to prevent inaccessibility during and after a seismic event.

IMPLEMENTATION:

In H-Area Tank Farm, there are multiple devices to stop the motive force of a transfer. Electrical power to the pump motors can be secured from various locations.

The second isolation device shall be reasonably located away from the first isolation device to maintain accessibility of at least one of the devices as needed during and after a seismic event. The intent of a reasonable distance between the two isolation devices is to ensure the transfer can be shut down when one of the devices could not be reached due to seismic event.

Implementation Items:

1. For a HIGH-REM WASTE TRANSFER, identify a second isolation device such as any power supply isolation for the transfer pump motor to stop the motive force. This second isolation device should be reasonably located away from the first isolation device.

2. Provide instructions in the HIGH-REM WASTE TRANSFER procedures to use the second isolation device to stop the motive force if the first isolation device fails to stop the motive force.

4.13 FLUSHING THE CORE PIPE AFTER WASTE TRANSFERS (TSR 5.8.2.21) (SAC)

ATTRIBUTE REQUIREMENT: 5.8.2.21.g,t

Within 30 days of completing a WASTE TRANSFER, a sufficient flush of the core pipe shall be performed such that the inhalation dose potential of the residual waste in the core pipe is less than or equal to 3.5E+07 rem/gal.

Prior to TRANSFER INITIATION of a HIGH-REM WASTE TRANSFER, a single line volume flush (with water) of the transfer line core pipe shall be performed. The pre-transfer flush shall be performed within 30 days of actual TRANSFER INITIATION.

If an evaluation indicates that the inhalation dose potential of the residual waste in the core pipe is less than or equal to 3.5E+07 rem/gal (including 2 Sigma uncertainty), flushing is not required. If flushing is required, the necessary flush volume and duration shall be determined. Flushing is not required if the time between transfers is less than 30 days (the 30-day completion time for the flush shall be based on completion of the last transfer).

IMPLEMENTATION:

Flushing of transfer lines is required within 30 days after a WASTE TRANSFER with an inhalation dose potential (including 2 Sigma uncertainty) greater than 3.5E+07 rem/gal. When comparing to the IDP limits, the conservative uncertainty values from Reference 32 can be used to lower the limit instead of calculating the IDP with uncertainty. IDP for flushing will be calculated in WCS and checked against the limit. Uncertainty of 100% from Reference 32 for supernate will be applied to the limit. Therefore, in WCS flushing of transfer lines will be required if IDP is greater than 1.75E+07 rem/gal.

If the WASTE TRANSFER is a batch transfer, a single flush after the last batch transfer is sufficient. The batch transfers shall not be separated by more than two weeks for the hydrogen buildup. However, if sludge-slurry settling / salt out criteria times are less than the batch duration, the lower time limit shall be used for flushing requirements. For SLUDGE SLURRY TRANSFERS, based on the recommendations of reports WSRC-RP-93-900-TL (Reference 22) and WSRC-RP-93-800 (Reference 23), three line volumes at a normal flush water system flow rate should dilute the sludge slurry by 99%. Report WSRC-RP-93-800 (Reference 23) concludes that sludge-slurry will not plug the line if the settling time is less than a week. For non-SLUDGE SLURRY TRANSFERS, one line volume at a normal flush water system flow rate should bring the core pipe residual waste IDP to less than 3.5E+07 rem/gal (including 2 Sigma uncertainty).

This requirement is not applicable to the transfer lines owned by other facilities.

During the performance of a transfer line flush associated with WASTE TRANSFER, and pre-transfer flush for HIGH-REM WASTE TRANSFER, assurance that the flush water is being routed to the appropriate TRANSFER PATH shall be achieved through positive confirmation of a level change in the receipt vessel consistent with the derived flush volume. For situations where the required volume of the flush is such that the measuring device may not indicate an

adequate change in level (e.g., small volume flush to a waste tank), the following items shall be performed to ensure flush completion:

- Initial flush water valve position verification can be performed using the respective flush water system's alignment checklist. Subsequent flush water valve positioning is controlled in accordance with the corresponding procedure. Flush water valve(s) in the defined TRANSFER PATH shall be independently verified.

- Confirm the level change in the sending vessel is consistent with the derived flush volume.

Piping branches off of the Transfer Path which did not have direct transfer flow through them (e.g., piping dead legs) are not required to have direct flush flow through them during flushing requirements. See Section 5.5.4.2.21 of the DSA for justification.

Implementation Items:

1. SLUDGE SLURRY TRANSFER procedures shall require the transfer lines be flushed within 30 days of transfer completion with a minimum of three line volumes. If the SLUDGE SLURRY TRANSFER inhalation dose potential is less than or equal to 1.75E+07 rem/gal, flushing is not required.

2. Non-SLUDGE SLURRY TRANSFER procedures shall require the transfer lines be flushed within 30 days of transfer completion with one line volume. If the Non-SLUDGE SLURRY TRANSFER IDP is less than or equal to 1.75E+07 rem/gal, flushing is not required.

3. Prior to TRANSFER INITIATION of a HIGH-REM WASTE TRANSFER, a single line volume flush (with water) of the transfer line core pipe shall be performed. The pre-transfer flush shall be performed within 30 days of actual TRANSFER INITIATION

4. See Reference 12 (Corrosion Control PDD), Section 5.1.2, for additional Microbiologically Induced Corrosion (MIC) flushing requirements.

5. Implement the requirements identified by the evaluation by performing either item a OR items b.1 and b.2:

   a. During the performance of a transfer line flush associated with a WASTE TRANSFER and pre-transfer flush for HIGH-REM WASTE TRANSFER, assurance that the flush water is being routed to the appropriate TRANSFER PATH shall be achieved through positive confirmation of a level/volume increase in the receipt vessel consistent with the derived flush volume.

   OR

   b.1. During the performance of a transfer line flush associated with a WASTE TRANSFER and pre-transfer flush for HIGH-REM WASTE TRANSFER, assurance that the flush water is being routed to the appropriate TRANSFER

PATH shall be achieved through positive confirmation of a level/volume decrease in the sending vessel consistent with the derived flush volume.

AND

b.2. Initial flush water valve position verification can be performed using the respective flush water system's alignment checklist. Subsequent flush water valve positioning is controlled in accordance with the corresponding procedure. Flush water valve(s) in the defined TRANSFER PATH shall be independently verified.

4.14 ISOLATION DEVICE TO STOP THE TRANSFER (TSR 5.8.2.21) (SAC)

ATTRIBUTE REQUIREMENT: 5.8.2.21.h & DSA Section 5.5.4.2.21.2.11

Prior to TRANSFER INITIATION, procedures shall identify (including staging requirements) the functional equipment needed to stop transfers and siphons.

> Most transfers are terminated from a control room panel or Distributed Control System (DCS). For a steam gang valve transfer, the motive force is secured when the valves in the field move from the "steam" or "jet" position into the "air" position. After the pipes routing from the gang valve to the jet are air blown, the valves move to the "vent" position. This valve manipulation secures the steam from the jet eductor. In addition to securing the transfer from the control room panel using the gang valve controls, there are numerous manual valves located in the field which may be used as alternate means for securing steam to a transfer jet.
>
> For a transfer using a pump, the transfer is stopped when the electrical power to the pump motor is secured from the panel board or DCS. Electrical power to the pump motor can be secured from alternate locations if needed.
>
> For an air-driven jet/pump transfer, the motive force is secured when the air supply valves are closed. Other non-credited methods of securing the air supply exist if needed.
>
> For transfers that utilize a dedicated power source, the motive force is secured when the power source is secured (e.g., unplugging the power supply cord to an air compressor that supplies air to an air driven pump). If there is a reservoir between the compressor and the transfer pump, an evaluation shall be performed to ensure that the transfer will be stopped in a reasonable time. In this case, no specific equipment needs to be credited or identified.
>
> For jets using water as motive force, the transfer can be secured when the flush water supply valves are closed.

Equipment needed to stop transfers is applicable to CONTINGENCY TRANSFERS and TCCR TRANSFERS.

IMPLEMENTATION:

The waste tank transfer jet gang valves have manual isolation valves in the steam supply and air supply systems located upstream of the gang valves and manual isolation valves located in the jet line downstream of the gang valves. Depending on the gang valve isolation valve configuration, either the upstream or downstream isolation valve(s) is used to isolate steam, and air to the transfer jet. Selection of the isolation valves is based on operator accessibility and operation during accident and post seismic event conditions.

The transfer pumps and Evaporator feed pumps have various electrical components that can be used to manually interrupt electrical power to the motor. Dependent on the pump involved,

either the electrical supply breaker to the motor or the motor disconnect device is used as the device to interrupt electrical power to the pump motor.

Transfers out of the evaporators are not initiators to a waste tank overflow accident and therefore do not require Safety Significant devices to stop the transfers and siphons.

If a transfer jet gang valve discharge isolation valve is identified to stop the transfer, it will stop all motive forces (steam, air and water). If a steam isolation valve is identified to stop the transfer, it is possible to have air lift of the waste if air leaks through and proper elevations exist. For this condition, both steam and air isolation valves (including bypass valves if present) shall be identified to stop the transfer.

The manual cycling of the credited valves shall consist of fully closing the valve and then fully opening it (or vice versa if the valve is normally closed). This exercise of the valve ensures that the valve is not frozen and therefore able to be closed if required.

For Contingency Transfer System transfers and TCCR TRANSFERS, equipment to stop a siphon is not required. Additionally, equipment to stop transfers is not required for transfers into waste tanks for the following:

- Batch transfers less than 15,000 gallons (i.e., sending vessel is less than 15,000 gallons and does not have continuous makeup capability). The liquid source system shall be considered to have continuous makeup capability if the system has an automatic fill provision that is not electrically or mechanically isolated. The electrical or mechanical isolation shall contain two independent means of isolation (e.g., two isolation valves; one isolation valve and open disconnect for liquid source transfer pump). Liquid additions to the waste tank from the Dissolution Water Skid do not have continuous makeup capability as described in DSA Section 3.4.1.5.2.

- Siphons/lifts/pump-outs of the contents of an evaporator pot (if the evaporator feed pump is secured)

Stopping an unintended siphon shall be completed as soon as practical based on plant conditions through the use of the appropriate transfer procedure (typically accomplished by closing appropriate waste transfer valves). Once the siphon has been stopped, the need for a rapid response is no longer required and breaking the siphon is not time dependent. Therefore, the equipment called out in the siphon evaluation for breaking the siphon does not have to be stored near the affected TRANSFER PATH.

Transfer line isolation valves that are credited equipment used to stop transfers/siphons shall be specified in the procedure. Functionality of the valve(s) is proven by opening the valve(s) when initially establishing the TRANSFER PATH. This provides assurance that the valve(s) is capable of being manipulated and, in the event of a transfer error/siphon, will provide a credited method to stop the flow of waste. The transfer procedure will also require a check to ensure no facility conditions (e.g., NCRs, OOS list, temporary modifications, lock outs) will prevent the valve from performing its intended function.

Implementation Items:

1. Prior to TRANSFER INITIATION identify the isolation valve credited to stop steam, and air flow to transfer jets in the transfer procedure and verify that it is in service prior to transfer. If the steam isolation valve is identified as a credited valve, an air isolation valve must also be identified.

2. Prior to TRANSFER INITIATION identify the electrical isolation device credited to stop transfer pumps in the transfer procedure and verify that it is in service prior to transfer.

3. Prior to TRANSFER INITIATION identify the isolation valve credited to stop air flow to air-driven transfer jets/pumps in the transfer procedure and verify that it is in service prior to transfer.

4. Transfer procedures shall ensure that the credited valves identified in implementation items 1 and 3 are manually cycled prior to TRANSFER INITIATION.

5. Transfer procedures shall ensure operability of a valve credited with stopping a transfer or siphon during the initial TRANSFER PATH line up where the valve is opened to establish the TRANSFER PATH. If the valve is normally open as required by the System Alignment Check list, the valve must be closed and then re-opened.

6. Prior to TRANSFER INITIATION the transfer procedure shall verify the valve credited with stopping a transfer or siphon is available to be used (e.g., no OOS tags, lock outs, NCRs, temporary modifications).

4.15 TRANSFER MONITORING (TSR 5.8.2.21) (SAC AS NOTED)

ATTRIBUTE REQUIREMENT: 5.8.2.21.c,o,p

Monitoring and material balance requirements for WASTE TRANSFERS to detect transfer events shall be determined. The frequency and method (e.g., level/leak monitoring) of monitoring and material balances for a transfer and the required monitoring locations (including consideration of those past the first isolation point) shall be determined on an individual basis.

ACTUAL MISSING WASTE shall be less than or equal to 5,000 gallons. If ACTUAL MISSING WASTE is greater than 5,000 gallons, then the affected WASTE TRANSFERS shall be terminated immediately. This attribute is a SAC. This attribute is applicable to CONTINGENCY TRANSFERS.

Material balance discrepancies shall be less than or equal to 15,000 gallons. If material balance discrepancies are greater than 15,000 gallons, then the affected WASTE TRANSFERS shall be terminated immediately. This attribute is a SAC.

WASTE TRANSFERS shall be monitored periodically for indications of transfer events (i.e., transfer error, siphoning, and leakage). Monitoring shall extend beyond the TRANSFER PATH to locations (e.g., pump tanks and waste tanks) determined by evaluation. The evaluation to determine the monitoring locations beyond the TRANSFER PATH shall consider the isolation method used to define the TRANSFER PATH (e.g., non-leak tested valve versus leak-tested valve, double valve isolated, or blanked). The frequency and method (e.g., level/leak monitoring) of transfer monitoring and material balances for a transfer shall be determined on an individual basis and shall be commensurate with the transfer rate and transfer type (batch versus continuous).

WASTE TRANSFERS with the potential to transfer material in amounts greater than 15,000 gallons require material balances. In general, increased monitoring frequency is appropriate during the initial stages of the transfer, with a lesser frequency required once a transfer has been established. Material balances are not required for Contingency Transfer System transfers, or WASTE TRANSFERS involved with feed to and receipt from an evaporator. Contingency Transfer System transfers are transfers of waste from the annulus of a leaking waste tank back to the primary side of the same waste tank using the Contingency Transfer System. Material balances are required for evaporator recycle transfers.

> During WASTE TRANSFERS, leaks and spills can be detected by numerous instruments in the facilities. Available instruments include reel tapes, radar level detectors, Area Radiation Monitors (ARMs), Continuous Air Monitors, dip tubes, and conductivity probes (not all of these features may be present to detect waste in each location). These instruments shall be included in the transfer procedure as applicable. Other methods can be used to monitor for indications of transfer events. These methods include insertion of a video camera in the waste tank, using a reel tape to monitor tank level, parking a reel tape above the waste surface, etc. The different circumstances of each individual transfer shall be evaluated to determine which method is most effective.

In addition to level/leak monitoring above, material balances shall be performed as another means of detecting transfer events. The material balance cumulative difference may be reset to zero during the transfer or following a shutdown if the documented engineering evaluation is completed.

IMPLEMENTATION:

Waste transfers shall be monitored periodically for indication of transfer events often enough such that a leak of 15,000 gallons would be detected. A material balance shall be performed for all WASTE TRANSFERS with a potential volume of greater than 15,000 gallons (including siphon potential) with the exception of CONTINGENCY TRANSFERS or WASTE TRANSFERS involved with feed to and lifting from an evaporator. Material balance tolerances shall be prescribed in the transfer procedures. Small volume transfers from pump tanks to waste tanks should have a reasonably small material balance tolerance. Large volume transfers from a waste tank through numerous pump tanks and finally to another waste tank would most likely have a relatively large material balance tolerance. For this reason, each transfer or grouping of transfers shall prescribe an acceptable material balance tolerance in the transfer procedure. The Shift Manager, Shift Supervisor, and/or Shift Technical Engineer shall use this tolerance for determining if a transfer is being routed successfully.

A material balance discrepancy should be compared with other process data as well as the trend of the previous discrepancies during the same transfer, and consider the system flow rate and material balance frequency, to ensure the transfer is shut down before the DSA maximum missing waste volume is exceeded. Re-zeroing of material balances may be completed prior to reaching the applicable transfer procedure shut down criteria and shall include a documented technical basis. The primary means of re-zeroing shall be accomplished by verifying no indications of a waste leak in the transfer monitoring leak detection equipment (for LOW-REM WASTE TRANSFERS) or the LCO related LEAK DETECTION LOCATION (for HIGH-REM WASTE TRANSFERS. Resetting the cumulative material balance difference, during the transfer or following a shutdown, must be evaluated and approved with a documented engineering evaluation. This evaluation can be in the form of a position paper, engineering numbered memo or included as part of the transfer procedure. Approval for resetting to zero must be obtained from the Facility Manager or his designee. The evaluation should consider items such as validity of transfer data, functionality of instruments being used (reel tapes, radar level detectors, bubblers, etc.), calculation errors, transfer line hold ups, jet dilution estimates, evaporator operational parameter changes (feed rate, lift rate), salt mounds, salt on cooling coils, material balance of concurrent transfer that is single valve isolated, conical sections of Type III/IIIA Tanks (>299”), unexplainable level changes in other PROCESS AREAS, etc. If the evaluation cannot support re-zeroing of the material balance discrepancy, the transfer shall be shutdown. The material balance discrepancy shutdown criteria approved for the transfer procedure remains in effect and will continue to protect maximum missing waste assumptions of the DSA.

The frequency of the material balance is dependent on transfer rate (jet transfer vs. pump transfer) and type of transfer (batch vs. continuous). For jet transfers the average transfer rate is less than 100 gpm and pump tank transfer rate is 125 gpm. Most of the transfers are limited by either jet or pump tank transfer rates. Based on these transfer rates, a material balance shall

be performed every 2 hours. Material balance frequency for a waste tank to waste tank pump transfer without a pump tank shall be determined on a case by case basis. Also, the frequency of the material balances should be more often during the initial stages of the transfer when transfer events are more likely to occur and less frequently after the transfer is established. This increased frequency shall be accounted for when multiple prime movers are utilized for a WASTE TRANSFER and their start times are not the same. This is to ensure that all TRANSFER PATH segments are equivalently monitored when waste is first introduced. For short duration transfers (e.g., less than 1 hour) the material balance can be performed at the completion of the transfer. Different material balance frequencies for a specific transfer can be prescribed with an engineering justification.

For Inter Area Line (IAL) transfers, the first material balance can be performed after a level increase in the receipt tank (it may take longer than 1 hour due to number of pump tanks and transfer lines involved). Since IAL transfers normally start with water to verify the transfer route, it is acceptable to perform the first material balance 2 hours after start of the transfer.

16H evaporator transfer operations TRANSFER PATHS are dedicated to specific locations without going through any pump tanks, diversion boxes, valve boxes or drain valve boxes. TRANSFER PATH for evaporator feed goes directly from feed tank to the evaporator pot. Evaporator lift TRANSFER PATH goes directly from evaporator pot to concentrate/vent tanks through the associated GDL. Steam and air supply to alternate lift is blanked off when it is not in use. Evaporator cell sump jet TRANSFER PATH goes directly from cell to evaporator feed tank. Therefore, transfer events are minimized for these evaporator transfer operations and material balances are not required for these TRANSFER PATHS. However, during evaporator operations, feed and concentrate tank levels are monitored periodically for level changes. The COPs for 16H are not required to be monitored if the associated blanks are installed. The COP and associated leak detection are required to be monitored unless they have been removed from the TRANSFER PATH per the requirements of Section 4.3.

Material balance need not be performed during the temporary shutdown of the transfer provided that one is performed after the prime mover is stopped.

Waste tank levels using reel tapes/radar level detectors may not be accurate if slurry pumps/mixers are in operation. Means of obtaining an accurate material balance may include stopping the slurry pumps/mixers to get the reel tape/radar readings or establishing another method of obtaining material balance with slurry pumps/mixers in operation.

If the transfer involves two waste tanks receiving and transferring simultaneously from one tank to another (e.g., Tank 6 transfer to Tank 7 and back to Tank 6), material balance can be attained by comparing the change in levels in each of the tanks.

When securing the transfer, the expected drain back volume (in gallons or inches of tank level) shall be specified in the transfer procedure to aid in determining transfer events such as siphoning, line pluggage, equipment malfunctioning (closed/partially closed valve), etc. This drain back requirement is not applicable to the waste transfers to or from the evaporator pot due to the limited volume.

ACTUAL MISSING WASTE is WASTE TRANSFER material which is outside the primary containment boundaries of the planned TRANSFER PATH and is confirmed by instrumentation or visual inspection. ACTUAL MISSING WASTE does not apply to non-waste material which is outside the primary containment boundaries of the planned TRANSFER PATH during activities which are classified as a WASTE TRANSFER due solely to siphon potential. For this exclusion, it shall be confirmed that no material was siphoned from a waste tank or pump tank.

ACTUAL MISSING WASTE will be determined by performance of engineering evaluation if indications or installed instrumentation are not available to determine the amount of missing waste. This evaluation will determine the source of the waste and will be confirmed through the use of alternate instrumentation, observations, or calculations.

Determinations for ACTUAL MISSING WASTE will be part of the evaluations for resetting the cumulative material balance difference, during the transfer as described above. If the material balance can be re-zeroed, the transfer can continue until other shutdown criteria are met.

Once it has been determined that ACTUAL MISSING WASTE has been detected the transfer shall be shut down immediately. Flushing, venting and draining activities will only be allowed if it can be demonstrated that these activities cannot contribute additional ACTUAL MISSING WASTE.

Implementation Items:

1. Record TRANSFER PATH tank levels (waste tanks and pump tanks) every 30 minutes for the first 2 hours of the transfer and every 2 hours thereafter in the transfer procedure. Record the final levels at the end of the transfer. This is not applicable to evaporator transfer operations.

2. Record sump levels and single valve isolated path tank levels (waste tanks and pump tanks) every 30 minutes for the first 2 hours and every 12 hours thereafter in the transfer procedure. Record final levels at the end of the transfer.

3. Perform a material balance for WASTE TRANSFERS with a potential volume of > 15,000 gallons every hour for the first 2 hours of the transfer and every 2 hours thereafter. Also perform a final material balance at the shutdown of the transfer. The material balance frequency may be varied for unusual transfers (e.g., interstitial liquid removal, IAL transfers) depending on transfer rate and type of transfer etc.

4. For a short duration transfer (e.g., less than 1 hour), the material balance can be performed at the completion of the transfer.

5. If ACTUAL MISSING WASTE is detected, then the affected transfer shall be terminated immediately.

6. When securing a transfer (not to include normal evaporator operation transfers), the expected drain back volume (in gallons or inches of tank level) shall be specified in the transfer procedure. During the transfer shutdown, levels shall be monitored for the expected drain back and if the expected drain back is not received, the Shift Manager or his designee shall be notified for appropriate actions.

7. Transfer procedures shall verify that equipment used for transfer monitoring is functional prior to the transfer.

8. Material balance cumulative difference can be reset to zero at any time during the transfer or following a shutdown if a documented engineering evaluation is completed and approved by the Facility Manager or his designee. If the material balance discrepancy reaches 5000 gallons, an engineering evaluation shall be performed to attempt to re-zero the material balance.

9. During evaporator operations, feed and concentrate tank levels shall be monitored periodically (round sheets) for level changes.

10. If material balance discrepancies are greater than 10,000 gallons, then the affected WASTE TRANSFERS shall be terminated immediately.

4.16 WASTE TANK SPACE AVAILABILITY (TSR 5.8.2.21)

ATTRIBUTE REQUIREMENT: 5.8.2.21.j

Prior to TRANSFER INITIATION of a WASTE TRANSFER, verification of available waste tank space shall be performed.

This attribute is also applicable to TCCR TRANSFERS.

IMPLEMENTATION:

Waste tank liquid level is required to be less than or equal to tank specific fill limits specified in the ERD (Reference 20). Therefore, by verifying the receiving waste tank expected maximum final level is lower than HLLCP setpoint prior to the transfer will ensure that the tank specific fill limit is not exceeded. For WASTE TRANSFERS, this requirement is required by the DSA as a control to prevent a waste tank over flow. Due to the nature of evaporator operations (continuous operation), verification is not required for transfers to or from the evaporator pot.

Implementation Items:

1. Verify that the receiving waste tank expected maximum final level is lower than the HLLCP setpoint from the ERD (Reference 20) prior to the transfer and document in the waste transfer evaluation and approval procedure (not applicable to transfers to or from the evaporator pot).

2. Verify that the transfer procedure directs shutdown of the transfer prior to reaching the approved volume identified in the waste transfer evaluation and approval procedure (not applicable to transfers to or from the evaporator pot).

   OR

   For simultaneous transfers between two tanks, verify that the transfer procedure directs shutdown of the transfer prior to reaching the expected final level of either tank as identified in the waste transfer evaluation and approval procedure (not applicable to transfers to or from the evaporator pot or evaporator recycle transfers).

4.17 ESP SLUDGE SLURRY TRANSFERS (TSR 5.8.2.21) (SAC)

ATTRIBUTE REQUIREMENT: 5.8.2.21.k,l, DSA Section 5.5.4.2.21.2.14,15 & DSA Section 5.5.4.2.43.2

ESP SLUDGE SLURRY shall only be transferred along the leak-checked paths shown in DSA Chapter 3, Figure 3.7-1. Within 30 days of completing ESP SLUDGE SLURRY transfers, a three line volume flush of the core pipe shall be performed. Flushing is not required if the time between transfers is less than 30 days (the 30-day completion time for the flush shall be based on completion of the last transfer). Steam jet transfers into an ESP SLUDGE SLURRY WASTE TANK are prohibited.

IMPLEMENTATION:

The only waste tanks permitted to be classified as an ESP SLUDGE SLURRY WASTE TANK are Tanks 40 and 51; all other waste tanks are prohibited from being classified as an ESP SLUDGE SLURRY WASTE TANK. ESP SLUDGE SLURRY may only be transferred along the leak-checked TRANSFER PATHS identified in DSA Chapter 3, Figure 3.7-1. None of the PROCESS AREAS associated with the TRANSFER PATH shown in figure 3.7-1 may be allowed back on the TRANSFER PATH until the flush discussed below is completed.

ESP SLUDGE SLURRY is defined as WASTE TRANSFER material that has a hydrogen generation rate greater than 1.5E-5 ft^3/gal-hr and less than or equal to 5.0E-5 ft^3/gal-hr. Classification of material as ESP SLUDGE SLURRY is independent of the inhalation dose potential of the material and is independent of the waste tank containing the material being classified as an ESP SLUDGE SLURRY WASTE TANK.

For ESP SLUDGE SLURRY transfers from Tank 51 to Tank 40, a three line volume flush of core pipe shall be performed to protect the assumed hydrogen generation rate for this TRANSFER PATH. The safety function of the three line volume flush after ESP SLUDGE SLURRY transfers is to reduce the hydrogen generation rate of material in the PROCESS AREAS affected by the ESP SLUDGE SLURRY transfer. The flush will ensure that the final hydrogen generation rate in the affected PROCESS AREAS is less than or equal to the bounding radiolytic hydrogen generation rate assumed for that location.

During the performance of a transfer line flush associated with ESP SLUDGE SLURRY transfer, assurance that the flush water is being routed to the appropriate TRANSFER PATH shall be achieved through positive confirmation of a level change in the receipt vessel consistent with the derived flush volume. For situations where the required volume of the flush is such that the measuring device may not indicate an adequate change in level (e.g., small volume flush to a waste tank), the following items shall be performed to ensure flush completion:

- Initial flush water valve position verification can be performed using the respective flush water system's alignment checklist. Subsequent flush water valve positioning is controlled in accordance with the corresponding procedure. Flush water valve(s) in the defined TRANSFER PATH shall be independently verified.

- Confirm the level change in the sending vessel is consistent with the derived flush volume.

Piping branches off of the Transfer Path which did not have direct transfer flow through them (e.g., piping dead legs) are not required to have direct flush flow through them during flushing requirements. See Section 5.5.4.2.21 of the DSA for justification.

Implementation Items:

1. ESP SLUDGE SLURRY shall only be transferred along the leak-checked paths shown in DSA Chapter 3, Figure 3.7-1.

2. Within 30 days of completing ESP SLUDGE SLURRY transfers, a three line volume flush of the core pipe shall be performed. Flushing is not required if the time between transfers is less than 30 days (the 30-day completion time for the flush shall be based on completion of the last transfer).

3. Implement the requirements identified by the evaluation by performing either item a or items b.1 and b.2 below:

   a. During the performance of a transfer line flush associated with an ESP SLUDGE SLURRY transfer, assurance that the flush water is being routed to the appropriate TRANSFER PATH shall be achieved through positive confirmation of a level/volume increase in the receipt vessel consistent with the derived flush volume.

   OR

   b.1. During the performance of a transfer line flush associated with an ESP SLUDGE SLURRY transfer, assurance that the flush water is being routed to the appropriate TRANSFER PATH shall be achieved through positive confirmation of a level/volume decrease in the sending vessel consistent with the derived flush volume.

   AND

   b.2. Initial flush water valve position verification can be performed using the respective flush water system's alignment checklist. Subsequent flush water valve positioning is controlled in accordance with the corresponding procedure. Flush water valve(s) in the defined TRANSFER PATH shall be independently verified.

4.18 PUMP TANK SPACE FOR CANYON TRANSFERS (DSA SECTION 3.4.2.18.1)

ATTRIBUTE REQUIREMENT: DSA Section 3.4.2.18.1.8

The receipt pump tank for an in-progress Canyon transfer can receive the entire transfer volume without overflowing the pump tank.

> DSA Section 3.4.2.18.1 Seismic Event for the transfer error scenario assumed that the receipt pump tank from the Canyon transfer could receive the entire transfer volume without overflowing the pump tank. This assumption shall be protected.

IMPLEMENTATION:

Normally Canyon transfers are received as a batch transfers into pump tanks. Prior to accepting the transfer from the Canyon, the operator shall verify that the transfer volume will be less than pump tank available volume. However, if the Canyon transfer is a continuous transfer and if the transfer pump stops or fails to start during the transfer, the operator shall notify the Canyon operator to stop the transfer. Based on the Canyon header operating level and the Canyon transfers being gravity drained (open channel flow), the drain back volume from the Canyon transfer lines will be less than the volume needed to overflow the pump tank if the Canyon transfer is stopped immediately after the pump failure.

Implementation Items:

1. If the Canyon transfer is a batch transfer, verify that the amount of waste to be received will not overflow the pump tank prior to the transfer.

2. If the Canyon transfer is a continuous transfer and if the pump tank pump stops or fails to start during the transfer, shutdown the transfer from the Canyon immediately.

4.19 PUMP TANK TRANSFER JET CONTROL (TSR 5.8.2.36) (SAC)

ATTRIBUTE REQUIREMENT: 5.8.2.36 & DSA Section 5.5.4.2.36.2

Controls shall be established to ensure that steam/air is manually isolated from pump tank transfer jets when not transferring. Proper valve line-up of the jet transfer discharge path will be performed via the Transfer Control Program.

> The amount of airborne material at any location containing liquid waste is related to the conditions of the waste (e.g., waste temperature, surface area, ventilation flow, and available vapor volume). In addition, anticipated normal operations and process upsets could disturb liquid waste and cause an increase in the airborne component of wastes in the CSTF. Some waste disturbances (e.g., normal waste transfers) can cause minor waste splashing but do not result in a significant increase in airborne material and are not considered accidents, as documented in the Hazard Analysis. Other intended and unintended waste disturbances (e.g., agitation, sparging, stripping) could result in a more significant airborne material release due to increased splashing or spraying.
>
> Various equipment used to transfer and agitate the waste uses high-pressure steam and/or air sources. It is possible as a result of equipment malfunction or a break in a steam or air line that high-pressure steam or air will impinge on the liquid waste and generate aerosols. Most of the aerosolization events involve liquid jet impingement, steam jet impingement or air jet impingement. Pump tank aerosolization events due to transfer jet impingement are prevented by isolating the pump tank transfer jet when not in use and jet discharge path valve position independent verification when the jet is in use.

IMPLEMENTATION:

This administrative control is credited as a Safety Class control to prevent pump tank aerosolization event. In the Tank Farms, FPT-2, FPT-3, HPT-2, HPT-3, HPT-4, HPT-5, HPT-6, HPT-8, HPT-9 and HPT-10 are equipped with steam jets. A manual valve between the steam/air supply and the transfer jet for each pump tank will be identified as the isolation valve to prevent steam/air entering the pump tank when not using the jet for transfer. The isolation valve will be closed upon completion of the transfer. Also, whenever these identified valves have been manipulated for other reasons (e.g., maintenance, surveillance), an alternate valve(s) shall be closed prior to the manipulation of the identified valve. Jet discharge path valve position verification prior to the transfer will be performed per Section 4.5 of this PDD.

Implementation Items:

1. Ensure that the pump tank transfer jet gang valve discharge isolation valve is closed after the transfer completion.

2. Ensure that the pump tank transfer jet gang valve discharge isolation valve is independently verified in the closed position.

3. Ensure alternate valve(s) is closed and Independently Verified prior to manipulation of the pump tank transfer jet gang valve discharge isolation valve for other activities which require manipulation of the valve. The alternate valve(s) shall isolate both steam and air supplies to the jet.

4.20 HYDROGEN GENERATION RATE CONTROL (TSR 5.8.2.31) (SAC)

ATTRIBUTE REQUIREMENT: 5.8.2.31 & DSA Section 3.4.1.5.5

Controls shall be established to ensure that the hydrogen generation rates for waste in the facility are within the bounding values used in the safety analysis for the applicable locations.

> DSA Section 3.4.1.5.5 listed the hydrogen generation rates used in the various accident events and residual calculations. The controls shall ensure that transferring materials are within these hydrogen generation rates to protect the assumptions.

IMPLEMENTATION:

Transferring waste from tank to tank, adding a large quantity of water to a waste tank, and removing supernate from a waste tank could change the hydrogen generation rate. An evaluation shall be performed prior to these activities to ensure that the hydrogen generation rates are within the assumed values. Evaporator bottoms hydrogen generation requirements are addressed in Evaporator Feed Qualification Program Description Document (Reference 10). *Note the bounding hydrogen generation rate for the 242-25H evaporator was updated per Reference 35.* Hydrogen generation rates shall be obtained from WCS.

Implementation Items:

1. Verify that sludge slurry material radiolytic hydrogen generation rate is less than or equal to 1.5E-5 ft^3/gal-hr prior to the transfer and document in the waste transfer evaluation and approval procedure.

2. Verify that supernate material hydrogen generation rate is less than or equal to 9.6E-6 ft^3/gal-hr prior to the transfer and document in the waste transfer evaluation and approval procedure.

3. Deleted.

4. Verify that the hydrogen generation rate of the material transferring through Type I and Type II Tanks annuli is less than or equal to 5.6E-6 ft^3/gal-hr prior to the transfer and document in the waste transfer evaluation and approval procedure.

5. Deleted.

6. Verify that ESP SLUDGE SLURRY material hydrogen generation rate is less than or equal to 5.0E-5 ft^3/gal-hr prior to the transfer and document in the waste transfer evaluation and approval procedure.

4.21 ARM LOCATION PROGRAM (TSR 5.8.2.41)

ATTRIBUTE REQUIREMENT: 5.8.2.41

Programmatic controls shall be implemented prior to HIGH-REM WASTE TRANSFERS and EMD STP operation to ensure the placement of ARMs for above-ground waste transfer lines (including excavated transfer lines) for radiological release detection purposes. The program shall also determine the alarm requirements (e.g., control room alarm or local alarm and operator/control room two-way communication) for each ARM. The ARMs shall comply with LCO 3.7.9 during HIGH-REM WASTE TRANSFERS through above-ground waste transfer lines and LCO 3.8.11 during EMD STP operations.

> DSA Section 3.4.2.9 accident analysis credits ARMs for all above-ground leak locations (including excavation locations) during HIGH-REM WASTE TRANSFERS and EMD STP operation. The detection capability of the ARM devices is sensitive to the radionuclide distribution. Therefore, an evaluation shall be performed prior to HIGH-REM WASTE TRANSFERS and EMD STP operation to determine the proper placement of the ARMs to ensure that they can perform their intended safety function. The program shall consider appropriate transfer specific parameters (e.g., Cs-137 concentration, shielding obstructions between leak locations and monitoring locations) when determining ARM placement. The program shall also determine the alarm requirements (control room alarm or local alarm and operator/control room two-way communication) for each ARM. The ARMs shall comply with LCO 3.7.9 and 3.8.11. LCO 3.7.9 is applicable to above-ground transfer lines in the TRANSFER PATH during HIGH-REM WASTE TRANSFERS. Above-ground transfer lines include those transfer lines designed to be permanently above-ground, and transfer lines that are temporarily exposed due to excavations. LCO 3.8.11 is applicable to EMD STP operations.

IMPLEMENTATION:

An evaluation shall be performed prior to HIGH-REM WASTE TRANSFERS to identify the ARM locations for above-ground transfer lines and exposed transfer lines in excavations. The evaluation shall be performed per the approved methodology in Reference 26.

Implementation Items:

1. For HIGH-REM WASTE TRANSFERS, perform an evaluation to identify ARM locations and alarm requirements for above-ground transfer lines and exposed transfer lines in the excavations in the TRANSFER PATH per Reference 26.

2. Perform an evaluation to identify ARM locations and alarm requirements for operating EMD STPs per Reference 14.

3. Ensure that the ARM locations and alarm requirements identified by the evaluation in items 1& 2 are included in the transfer procedure. The identified ARMs shall comply with LCO 3.7.9 and 3.8.11 requirements.

4.22 INHALATION DOSE POTENTIAL CONTROL (TSR 5.8.2.51) (SAC)

ATTRIBUTE REQUIREMENT: 5.8.2.51

Controls shall be established to ensure that the inhalation dose potentials (accounting for analytical uncertainty as described in DSA Chapter 5) are within the values analyzed in the DSA.

DSA Section 3.4.1.5.1 source term inputs and assumptions listed several waste streams that are used throughout the DSA to signify the Material At Risk (MAR) per unit volume basis. This section listed Bounding Sludge Slurry waste stream inhalation dose potential as up to 1.5E+09 rem/gal and Slurried Type IV Tank Waste stream inhalation dose potential as up to 1.0E+07 rem/gal (including 2 Sigma uncertainty). If the limits are met by programs (or their defining aspects) and do not require sample results, then analytical uncertainty is not applicable.

IDP uncertainty can be calculated based on isotopic concentration measurement uncertainty only since uncertainties associated with physical property data (e.g. mass, density) are very small in comparison to isotopic concentration uncertainties and can be ignored without significant impact on the overall uncertainty (reference 32). Also, analytical uncertainty would not be applicable for concentrations reported at Minimum Detectable Levels (MDL), as there is at least a 95% confidence that the result is below this value.

Reference 5 documented that none of the H-Area waste tanks exceeded the Bounding Sludge Slurry inhalation dose potential based on current tank status. However, it demonstrated that for tanks where the sludge mass exceeds 4.36E+04 kg and the sludge dose potential exceeds 9.0E+05 rem/gram, the resultant slurry may exceed the analyzed inhalation dose potential of 1.5E+09 rem/gal. Therefore, prior to initiating sludge mixing activities within tanks meeting this criteria, an evaluation shall be performed to verify that the resultant slurry will not exceed inhalation dose potential of 1.5E+09 rem/gal. This administrative control is applicable only when slurrying H-Area sludge tanks.

Also Reference 6 documented that of all the Type IV tanks, only Tanks 21 and 22 have the potential to exceed the analyzed inhalation dose potential for Type IV tank slurry of 1.0E+07 rem/gal (including 2 Sigma uncertainty when using sample results). Therefore, prior to initiating sludge mixing activities within Tank 21 or Tank 22, an evaluation shall be performed to verify that the resultant slurry will not exceed an inhalation dose potential of 1.0E+07 rem/gal. This evaluation will be performed outside the WCS. Therefore, uncertainty will be included in the evaluation and WCS limit will not be changed.

This administrative control is applicable only when slurrying H-Area sludge tanks.

The inhalation dose potential of waste material in Tank 50, Tank 50 Valve Box, and the receipt transfer lines into Tank 50 shall contain no more than the bounding Tank 50

Supernate inhalation dose potential of 2.09E+05 rem/gal. Remaining within these limits also protects the inhalation dose potential assumptions in the Saltstone Facility WAC for transfer receipts from the CSTF.

The inhalation dose potential of waste transferred to the 242-16H evaporator shall be less than or equal to 3.3E+07 rem/gal to protect the analyzed consequences. Ensuring that sludge solids carryover does not occur (maximum 1 wt. % sludge) as accomplished by TSR AC 5.8.2.19 ensures compliance with the 242-16H evaporator feed/bottoms inhalation dose potential; therefore, no additional implementation items are required in this PDD.

As discussed in DSA Addendum Section 3.3 [Ref. 35], the 242-25H Evaporators Bottoms waste stream (and associated feed streams) inhalation dose potential limit has been updated to 1.85E+07 rem/gal. Based on this change to the waste stream definition, protecting 1 wt.% sludge solids (via the Sludge Carryover Minimization Program) does not necessarily ensure compliance with the revised 242-25H Evaporator Bottoms (and associated feed) inhalation dose potential limit of 1.85E+07 rem/gal (this value does not include uncertainty). Therefore, an engineering evaluation will be required to ensure compliance with the inhalation dose potential limit for 242-25H Evaporator Bottoms (and associated feed).

The inhalation dose potential of waste transferred to the 241-96H ARP Facility shall be less than or equal to 1.4E+06 rem/gal to protect the analyzed consequences of the facility. This is protected by salt macro batch qualification in Tank 49. Therefore, all downstream processing facilities inhalation dose potential limits are protected and no additional implementation items are required in this PDD.

The inhalation dose potential of waste transferred to the TCCR Unit shall be less than or equal to 1.4E+06 rem/gal to protect the analyzed consequences.

This attribute is also applicable to TCCR TRANSFERS.

<u>IMPLEMENTATION</u>:

An evaluation shall be performed to verify that the inhalation dose potential does not exceed the Bounding Sludge Slurry inhalation dose potential of 1.5E+09 rem/gal when the sludge mass exceeds 4.36E+04 kg AND sludge dose potential exceeds 9.0E+05 rem/gram prior to initiating the sludge mixing (Reference 5). Prior to initiating the sludge mixing in Tanks 21 and 22, an evaluation shall be performed to verify that the slurry inhalation dose potential does not exceed the Type IV tank slurry inhalation dose potential or 1.0E+07 rem/gal (Reference 6).

Prior to transferring waste to Tank 50, Tank 50 Valve Box, or the receipt transfer lines into Tank 50, an evaluation shall be performed to verify that the inhalation dose potential will not exceed 2.09E+05 rem/gal.

If 1 wt.% sludge solids carryover will protect the associated limit for 242-25H Evaporator Bottoms and feed (as determined by engineering evaluation), then the Sludge Carryover Minimization (SCOM) Program requirements may be used for protecting the sludge solids

content and inhalation dose potential. However, if the engineering evaluation requires less than 1 wt.% sludge solids for meeting the inhalation dose potential limit, then additional requirements (as determined by the engineering evaluation) shall be implemented [Reference 35].

Implementation Items:

1. Prior to initiating sludge mixing activities in a H-Area waste tank, determine if sludge mass AND the sludge dose potential is greater than 4.36E+04 kg AND 9.0E+05 rem/gram respectively.

2. If sludge mass AND the sludge dose potential is greater than 4.36E+04 kg AND 9.0E+05 rem/gram respectively, perform an evaluation to verify that the resultant inhalation dose potential will not exceed 1.5E+09 rem/gal prior to initiating the sludge mixing in the tank.

3. Prior to initiating sludge mixing activities in Tanks 21 and 22, perform an evaluation to verify that resultant inhalation dose potential will not exceed 1.0E+07 rem/gal (including 2 Sigma uncertainty).

4. Prior to transferring waste to Tank 50, Tank 50 Valve Box, or the receipt transfer lines into Tank 50, perform an evaluation to verify the inhalation dose potential will not exceed 2.09E+05 rem/gal.

5. Requirements for IDP for 3H Evaporator System tanks are described in SCOM PDD (Reference 36)

6. The waste transfer inhalation dose potential must be verified to be less than or equal to 1.4E+06 rem/gal (including 2 Sigma uncertainty) prior to initiating waste transfers to the TCCR Unit.

4.23 WASTE ACCEPTANCE CRITERIA PROGRAM (TSR 5.8.2.15) (SAC)

ATTRIBUTE REQUIREMENT: 5.8.2.15

The Waste Acceptance Criteria Program shall ensure that the composition of waste streams received into the FACILITY is within analyzed limits. Transfer of waste from CST Facilities to other facilities shall meet the receiving facility Safety Basis.

IMPLEMENTATION:

The Waste Acceptance Criteria (WAC) and Waste Compliance Plan (WCP) programs as outlined in Reference 15 shall be used to meet this requirement. When sample results are utilized to demonstrate compliance with a limit/requirement, an analytical uncertainty of 2 Sigma shall be included prior to comparing to the limit/requirement. This is applicable to the following limits/requirements: inhalation dose potential, fissile material, organic contribution to flammable vapors, and Hazard Categorization for MCU.

IDP uncertainty can be calculated based on isotopic concentration measurement uncertainty only since uncertainties associated with physical property data (e.g. mass, density) are very small in comparison to isotopic concentration uncertainties and can be ignored without significant impact on the overall uncertainty (reference 32). Also, analytical uncertainty would not be applicable for concentrations reported at Minimum Detectable Levels (MDL), as there is at least a 95% confidence that the result is below this value.

The ERD shall list the approved waste streams that can be received into the FACILITY based on WAC and WCP programs.

Implementation Items:

1. List all approved waste streams from non CSTF facilities in the ERD (Reference 20).

4.24 TRANSFERS FROM WASTE TANK ANNULI (TSR 5.8.2.23) (SAC)

ATTRIBUTE REQUIREMENT: 5.8.2.23 & DSA Section 5.5.4.2.23

An annulus transfer program shall be established governing WASTE TRANSFERS from waste tank annuli. This program shall include, as a minimum, the installation and operation of a negative pressure ventilation system with HEPA filtration prior to TRANSFER INITIATION of waste from an annulus via a jetted transfer (steam or air). For tanks with a negative pressure annulus, this SAC ensures that, prior to transferring waste from the waste tank annulus via a jetted transfer (steam or air), the annulus ventilation system with HEPA filter is operating.

The Contingency Transfer System provides an alternate means to remove accumulated waste from the annulus of a leaking waste tank and transfer the waste back to the primary side of the same waste tank. Each Contingency Transfer System is comprised of a portable submersible pump/motor assembly; therefore, (since a jet is not utilized) this administrative control does not apply to CONTINGENCY TRANSFERS.

Implementation Items:

1. Ensure that negative pressure ventilation system with operable, tested HEPA filtration and calibrated differential pressure instrumentation is online while transferring annulus contents via a jetted transfer (steam or air).

2. For tanks with a negative pressure annulus, ensure that, prior to transferring waste from the waste tank annulus via a jetted transfer (steam or air), the annulus ventilation system with operable, tested HEPA filter and calibrated differential pressure instrumentation is operating.

4.25 PUMP TANK BACKUP VENTILATION SYSTEM SYSTEMS PROGRAM (TSR 5.8.2.37) (SAC)

ATTRIBUTE REQUIREMENT: 5.8.2.37

Prior to TRANSFER INITIATION, backup portable ventilation with portable generator shall be installed and functional for pump tanks which are receiving steam jetted transfers from a source of greater than 1200 gallons (excluding HDB-8 Complex pump tanks and pump tanks receiving canyon transfers). These systems shall be tested and maintained to ensure they can perform their safety function when required. If the backup portable ventilation system becomes non-functional while the pump tank is receiving a transfer, then the transfer shall be terminated immediately.

IMPLEMENTATION:

Backup portable ventilation systems are installed and tested for functionality prior to performing the transfer. They are removed at the completion of the transfer evolution and returned to storage for future use. No additional maintenance requirements apply since these systems are not left in place and are tested for functionality at each installation.

Implementation Items:

1. Backup portable ventilation with portable generator shall be installed and functional for pump tanks which are receiving steam jetted transfers from a source with an inventory greater than 1200 gallons (excluding HDB-8 Complex pump tanks and pump tank receiving canyon transfers).

2. If the backup portable ventilation system becomes non-functional while the pump tank is receiving a transfer, then the transfer shall be terminated immediately.

3. Normal power may be utilized with the portable ventilation system; however, the portable generator shall be installed and functional.

4.26 DSA SECTION 3.4.2.9.3

ATTRIBUTE REQUIREMENT: DSA Section 3.4.2.9.3

The source term analysis described in DSA Section 3.4.2.9.3 assumed that the secondary containments are closed (i.e., cell covers are in place, but small openings such as access or inspection ports may be open) when a WASTE TRANSFER is in progress through the secondary containment. Secondary containments that have liquid drain/overflow communication (at equivalent level of less than 15,000 gallons) from the secondary containment involved with the WASTE TRANSFER, shall also be closed (i.e., cell covers are in place, but small openings such as access or inspection ports may be open).

IMPLEMENTATION:

Secondary containments are typically underground or partially underground reinforced concrete vaults lined with stainless steel. They are covered with a removable concrete lid or stainless steel cover, which is generally in place but can be removed for maintenance activities requiring cell entry. Secondary containments include the following process areas:

- Diversion Boxes (DBs)
- Pump Pits (PPs)
- Valve Boxes (VBs)
- High Point Flush Pit (HPFP)
- LDB Drain Cell
- Evaporator Cells

Some of the secondary containments drain or overflow to another secondary containment. If the secondary containment in the TRANSFER PATH is not capable of holding 15,000 gallons before it drains or overflows into another one, cell covers for all secondary containments that have the potential to receive the drain or overflow shall also be covered.

From reference 29, the following secondary containments either drain or overflow before holding 15,000 gallons:

FDB-3 drains to FDB-2 which drains to FPP-1

FDB-4 drains to FPP-2

HDB-2 drains to HPP-3

HDB-8 overflows to HPP-7, 8, 9, 10 through pipe chaseVB-1 through 4 drains to VB-5 which drains to MLDB-5 @ FDB-2 which overflows to FPP-1

HPFP drains to LDB-1A and LDB-2A @ FDB-2 which drain and overflows to FPP-1

Also, the following Waste Tanks in the East Hill drain to LDB Drain Cell:

Tank 49 VB drains to LDB Drain Cell

Tank 51 LDBs over flows to LDB Drain Cells

Even though Tank 48 VB drains to LDB Drain Cell, cell covers are not required since transfers in and out of Tank 48 are prohibited.

Even though Tank 50 VB drains to LDB Drain Cell, cell covers are not required since transfers in and out of Tank 50 are non-waste transfers.

All other secondary containments do not drain or overflow to another secondary containment.

Implementation Items:

1. Transfer procedures shall verify that secondary containment covers for Pump Pits, High Point Flush Pit, LDB Drain Cell, Valve Boxes, Evaporator Cells (except for evaporator cell sump jet transfers), and Diversion Boxes are in place for all the secondary containments in the TRANSFER PATH prior to the WASTE TRANSFER. Secondary containment covers are not required for the secondary containments downstream of the first sound isolation point.

2. If FDB-3 is in the TRANSFER PATH, transfer procedures shall verify that FDB-2 and FPP-1 covers are in place prior to the WASTE TRANSFER.

3. If FDB-2 is in the TRANSFER PATH, transfer procedures shall verify that FPP-1 covers are in place prior to the WASTE TRANSFER.

4. If FDB-4 is in the TRANSFER PATH, transfer procedures shall verify that FPP-2 covers are in place prior to the WASTE TRANSFER.

5. If HDB-2 is in the TRANSFER PATH, transfer procedures shall verify that HPP-3 covers are in place prior to the WASTE TRANSFER.

6. If HDB-8 is in the TRANSFER PATH, transfer procedures shall verify that HPP-7, 8, 9, and 10 covers are in place prior to the WASTE TRANSFER.

7. If VB-1through 4 is in the TRANSFER PATH, transfer procedures shall verify that VB-5, FDB-2 and FPP-1 covers are in place prior to the WASTE TRANSFER.

8. Deleted

9. If HPFP is in the TRANSFER PATH, transfer procedures shall verify that FDB-2 and FPP-1 covers are in place or HPFP drain plugs are installed prior to the WASTE TRANSFER.

10. If LDB Drain Cell is in the TRANSFER PATH for transfers in and out of Tanks 49 and 51, transfer procedures shall verify that LDB Drain Cell cover is in place prior to the WASTE TRANSFER.

4.27 242-16H EVAPORATOR CHEMICAL CLEANING (TSR 5.8.2.52) (SAC)

ATTRIBUTE REQUIREMENT: 5.8.2.52 & DSA Section 5.5.4.2.49

The following controls shall be implemented during chemical cleaning of the 242-16H Evaporator:

1. Prior to adding acid to the evaporator vessel and while the vessel contains acidic material (i.e., pH less than 7.0), double valve isolation shall be established between the evaporator vessel and the evaporator drop tank.

   Transfers out of the evaporator vessel shall be permitted only when the pH is greater or equal to than 7.0. The pH may be considered greater than or equal to 7.0 when adequate caustic addition and mixing have occurred, or verified by sampling.

2. Prior to TRANSFER INITIATION from the Evaporator cell sump to Tank 43, the cell sump contents shall be verified, via sampling, to have a pH greater than or equal to 7.0.

   This SAC is to ensure that acidic material, used during the chemical cleaning process of the 242-16H Evaporator, is not added to a waste tank and cause potential degradation of the waste tank or cooling coils, or cause an increase in hydrogen generation rate.

IMPLEMENTATION:

Independent verification is required for the double valve isolation stated in Item 1 above.

Implementation Items:

1. Prior to adding acid to the evaporator vessel and while the vessel contains acidic material, double valve isolation shall be established between the evaporator vessel and the evaporator drop tank. Independent verification is required for this double valve isolation.

2 Transfers out of the evaporator vessel shall be permitted only when the pH is greater or equal to than 7.0. The pH may be considered greater than or equal to 7.0 when adequate caustic addition and mixing have occur.

ed, or verified by sampling.

3 Prior to TRANSFER INITIATION from the Evaporator cell sump to Tank 43, the cell sump contents shall be verified, via sampling, to have a pH greater than or equal to 7.0 during Chemical Cleaning only.

4.28 WASTE TANK CHEMICAL CLEANING PROGRAM (TSR 5.8.2.53) (SAC AS NOTED)

ATTRIBUTE REQUIREMENT: 5.8.2.53.a,b,c,d,e,f,g,h,i,j,k

In addition to the Transfer Control Program, the following controls shall be implemented during operations associated with waste tanks in ACIDIC CHEMICAL CLEANING MODE and CHEMICAL CLEANING TRANSFERS:

The TRANSFER PATH for CHEMICAL CLEANING TRANSFERS (or related vent/drain operations) shall only be permitted through the following LEAK DETECTION LOCATIONS: FDB-2, FDB-3, FDB-4, HDB-2, HDB-7, Valve Boxes 1 through 5, Valve Box LDB-17, Tank 51 Valve Box, Tank 51 Drain Valve Box, FPP-1, FPP-2, and HPP-3. CHEMICAL CLEANING TRANSFERS that may leak from primary containment to the H-Area Catch Tank and LDB Drain Cell have also been analyzed (TRANSFER PATHS associated with these locations are permitted to have CHEMICAL CLEANING TRANSFERS) (SAC).

Prior to TRANSFER INITIATION of a CHEMICAL CLEANING TRANSFER (or related vent/drain operations), isolation (single leak-tested valve, double valve isolation or blank) shall be established to preclude CHEMICAL CLEANING TRANSFERS from entering pump tanks, waste tanks, or transfer facilities outside of the intended TRANSFER PATH (SAC).

During CHEMICAL CLEANING TRANSFERS, acidic waste material from the vent and drain operation shall only be permitted to FPT-1, HPT-3 and the waste tanks associated with the vent/drain path. (SAC)

Prior to TRANSFER INITIATION of transfer line vent and drain operation associated with a CHEMICAL CLEANING TRANSFER, verification shall be performed to ensure that sufficient inhibitors are present in the applicable pump tank (FPT-1, HPT-3) to ensure neutralization of the acidic waste. (SAC)

Within 60 days after initiation of a CHEMICAL CLEANING TRANSFER (or related vent/drain operations), perform one of the following for each Valve Box, DB, PP, LDB Drain Cell, or H-Area Catch Tank that was associated with a CHEMICAL CLEANING TRANSFER (after completion of the transfer line flushing operation):

- Verify no level increase has occurred in the applicable transfer facility.
- Verify the material contained in the applicable transfer facility is non-acidic (i.e, pH greater than or equal to 7).
- Neutralize the acidic material contained in the applicable transfer facility (i.e., restore pH to greater than or equal to 7).

Prior to TRANSFER INITIATION from a Valve Box, DB, PP, the LDB Drain Cell, or the H-Area Catch Tank that was associated with a CHEMICAL CLEANING TRANSFER (or related vent/drain operations), perform one of the following for the applicable transfer facility: (SAC)

- Verify the material contained in the applicable transfer facility is non-acidic (i.e., pH greater than or equal to 7).
- Neutralize the acidic material contained in the applicable transfer facility (i.e., restore pH to greater than or equal to 7).

This control shall apply to a transfer facility (e.g., sump) transfers as a result of level increase from the time of TRANSFER INITIATION of a CHEMICAL CLEANING TRANSFER (or related vent/drain operations) through the applicable transfer facility until the previous item above is complete.

Prior to TRANSFER INITIATION of a CHEMICAL CLEANING TRANSFER from a waste tank in ACIDIC CHEMICAL CLEANING MODE, an engineering evaluation (accounting for waste tank mixing device operation to ensure adequate mixing of contents) shall be performed to ensure the oxalic acid content in the waste tank is less than or equal to 4 wt.%.

Prior to waste tank mixing device operation in waste tanks in ACIDIC CHEMICAL CLEANING MODE, verification shall be performed to ensure that sufficient water has been added to the waste tank to ensure the oxalic acid content in the waste tank (once mixed) will be less than or equal to 4 wt. %. (SAC)

Prior to TRANSFER INITIATION of a CHEMICAL CLEANING TRANSFER (or related vent/drain operations), verification shall be performed to ensure that sufficient inhibitors are present in the applicable receipt waste tank to ensure neutralization of the acidic waste. (SAC)

During receipt of CHEMICAL CLEANING TRANSFERS (or related vent/drain operations), at least one waste tank mixing device shall be operating in the applicable receipt waste tank to ensure adequate mixing and neutralization of the acidic waste. (SAC)

During receipt of CHEMICAL CLEANING TRANSFERS, acidic waste shall enter the receipt tank via a flow path that is below the waste tank liquid level. (SAC)

<u>IMPLEMENTATION</u>:

A CHEMICAL CLEANING TRANSFER is a transfer containing oxalic acid that occurs as a part of the waste tank chemical cleaning process. CHEMICAL CLEANING TRANSFERS shall be considered WASTE TRANSFERS. Venting and draining of transfer lines associated with a CHEMICAL CLEANING TRANSFER, provided there is no potential to siphon waste, are not considered as a CHEMICAL CLEANING TRANSFER or a WASTE TRANSFER. Once a transfer line has been flushed, subsequent transfers need not be considered as a CHEMICAL CLEANING TRANSFER.

The following transfer facilities have been analyzed to support CHEMICAL CLEANING TRANSFERS and may be on the TRANSFER PATH or serve as a LEAK DETECTION

LOCATION, as applicable: FDB-2, FDB-3, FDB-4, HDB-2, HDB-7, Valve Boxes 1 through 5, Valve Box LDB-17, Tank 51 Valve Box, Tank 51 Drain Valve Box, FPP-1, FPP-2, HPP-3, the H-Area Catch Tank and the LDB Drain Cell.

Waste Tanks 7, 13, and 51 are the chemical cleaning receipt waste tanks.

The following controls are applicable to all Type I/II Waste Tanks except Tank 1, chemical cleaning operations. Waste Tank 1 is prohibited from chemical cleaning operations.

Prior to initiation of a CHEMICAL CLEANING TRANSFER (or related vent/drain operations), isolation (i.e., double valve, single valve leak-tested, blank) shall be established to preclude CHEMICAL CLEANING TRANSFERS from entering pump tanks, waste tanks, or other transfer facilities outside of the intended TRANSFER PATH. Independent Verification of the TRANSFER PATH alignment shall be performed.

Vent and drain of acidic material from CHEMICAL CLEANING TRANSFERS shall only be permitted into FPT-1, HPT-3, and the waste tanks associated with the vent/drain path.

Engineering evaluation is required prior to initiation of a CHEMICAL CLEANING TRANSFER to ensure sufficient inhibitors are present in the applicable pump tank (FPT-1, HPT-3) to neutralize spent acid drainback from the transfers. Independent Verification of this attribute is performed via verification/checking per E7 Manual requirements.

Prior to TRANSFER INITIATION of transfer line vent and drain operation associated with CHEMICAL CLEANING TRANSFER, verification shall be performed to ensure that sufficient inhibitors are present in the applicable pump tank (FPT-1, HPT-3) to ensure neutralization of the waste. If inhibitors must be added to the pump tank as described in the previous paragraph and the value determined by the engineering evaluation must be transposed into the governing procedure, Independent Verification of the transposed value shall be performed. If this value is directly defined in the procedure, the Independent Verification of the value is accomplished by the standard procedure revision and approval process. Additionally, the inhibitor volume actually added to the pump tank shall be Independently Verified. Finally, Independent Verification of the inhibitor addition flow path shall be performed.

Upon completion of a CHEMICAL CLEANING TRANSFER, an IW flush of the TRANSFER PATH core pipe shall be performed. This flush will be performed in conjunction with any flush required by Section 4.13, “Flushing the core pipe after WASTE TRANSFERS”. This requirement also supports the required flush after a CHEMICAL CLEANING TRANFER contained in the CSTF Corrosion Control Program, WSRC-TR-2002-00327.

Within 60 days after a CHEMICAL CLEANING TRANSFER has been initiated, the following activities must occur for each Valve Box, DB, PP, LDB Drain Cell or H-Area Catch Tank that was associated with the CHEMICAL CLEANING TRANSFER:

- CHEMICAL CLEANING TRANSFER (or related vent/drain operation) has been completed,

  AND

- The TRANSFER PATH of the CHEMICAL CLEANING TRANSFER has been flushed with IW,

  AND

- one of the following has been performed:

  - Verify no level increase has occurred in the applicable transfer facility,

    OR

  - Verify the material contained in the applicable transfer facility is non-acidic (i.e., pH greater than or equal to 7),

    OR

  - Neutralize the acidic material contained in the applicable transfer facility (i.e., restore pH to greater than or equal to 7). An engineering evaluation shall determine the amount of inhibitors required to ensure neutralization.

Laboratory analysis or litmus paper test can be used to verify pH.

Prior to TRANSFER INITIATION from a Valve Box, DB, PP, LDB Drain Cell, or H-Area Catch Tank that was associated with a CHEMICAL CLEANING TRANSFER (or related vent/drain operations), perform one of the following for the applicable transfer facility. This requirement shall apply to the transfer facility transfers as a result of level increase from the time of TRANSFER INITIATION of a CHEMICAL CLEANING TRANSFER (or related vent/drain operations) through the applicable transfer facility until the previous item above is complete:

- Verify the material contained in the applicable transfer facility is non-acidic (i.e., pH greater than or equal to 7),

  OR

- Neutralize the acidic material contained in the applicable transfer facility (i.e., restore pH to greater than or equal to 7). An engineering evaluation shall determine the amount of inhibitors required to ensure neutralization.

Laboratory analysis can be used to verify pH of the material. If this method is chosen, the sample results shall be independently reviewed, i.e., the laboratory sample analysis value shall be confirmed to be greater than or equal to pH 7 by a second person. Litmus paper testing can also be used to verify pH. This method requires Independent Verification of the result, i.e., the litmus paper must be verified by a second person to be indicative of greater than or equal to pH 7.

If inhibitors must be added to the transfer facility and the value determined by the engineering evaluation must be transposed into the governing procedure, Independent Verification of the transposed value shall be performed. If this value is directly defined in the procedure, the Independent Verification of the value is accomplished by the standard procedure revision and

approval process. Additionally, the inhibitor volume actually added to the transfer facility shall be Independently Verified. Independent Verification of the engineering evaluation is performed via verification/checking per E7 Manual requirements.

Prior to TRANSFER INITIATION of a CHEMICAL CLEANING TRANSFER from a waste tank in ACIDIC CHEMICAL CLEANING MODE, an engineering evaluation shall be performed to ensure the OA contents in the waste tank is less than or equal to 4 wt.%. This can be established by tracking the cumulative number of gallons of 8 wt. % OA added to the treatment tank and by adding at least that many gallons of WW or IW, adjusted for specific gravity, to the tank. Per reference 31, when a pump is operating at the rated design speeds, mixing times are calculated to be short (<1 hour) for Newtonian fluids such as water. Therefore, mixing device shall be operating a minimum of 1 hour prior to TRANSFER INITIATION of a CHEMICAL CLEANING TRANSFER. This protects the input that corrosion induced hydrogen generation does not contribute to the flammable vapor concentrations in transfer facilities.

Prior to waste tank mixing device operation in waste tanks in ACIDIC CHEMICAL CLEANING MODE, verification shall be performed to ensure that sufficient water has been added to the waste tank to ensure the oxalic acid content in the waste tank (once mixed) will be less than or equal to 4 wt. %. This can be established by tracking the number of gallons of 8 wt. % OA added to the treatment tank and by adding at least that many gallons of WW or IW, adjusted for specific gravity, to the tank. IV is required for the following items:

1. Each OA tanker volume addition and for the total (cumulative) amount of OA added for determining the amount of dilution water.

2. Volume of dilution water needed.

3. Volume of dilution water actually added.

4. Dilution water source line up, if a totalizer is used for volume determination.

Prior to TRANSFER INITIATION of a CHEMICAL CLEANING TRANSFER (or related vent/drain operations) verification shall be performed to ensure that sufficient inhibitors are present in the applicable receipt waste tank to ensure neutralize of the acidic waste. An engineering evaluation shall determine the amount of inhibitors required to ensure neutralization in the waste tank.

If inhibitors must be added to the transfer facility and the value determined by the engineering evaluation must be transposed into the governing procedure, Independent Verification of the transposed value shall be performed. If this value is directly defined in the procedure, the Independent Verification of the value is accomplished by the standard procedure revision and approval process. Additionally, the inhibitor volume actually added to the pump tank shall be Independently Verified. Independent Verification of the engineering evaluation is performed via verification/checking per E7 Manual requirements.

During receipt of CHEMICAL CLEANING TRANSFERS (or related vent/drain operations), at least one mixing device shall be operating in the applicable receipt waste tank. Per reference 30, tests demonstrated that short periods of moderate energy mixing were sufficient to blend the

liquid layers and raise the pH of the solution near the surface. Prior to TRANSFER INITIATION, transfer procedure shall Independently Verify that at least one mixing device is operating in the receipt tank. Additionally, the transfer procedure shall require shut down the transfer if it is found that at least one receipt waste tank mixing device is not operating during the transfer.

During receipt of CHEMICAL CLEANING TRANSFERS, acidic waste shall enter the receipt tank via a flow path below the waste tank liquid level. This will preclude splashing of acidic material on to carbon steel components in the receipt waste tank. Prior to TRANSFER INITIATION, transfer procedure shall Independently Verify (IV) the waste transfer line-up to ensure that the acidic waste will enter via a flow path below the waste tank liquid level. Post transfer vent and drain operations into Tank 51 (i.e., for the transfer line low point located south of Tank 51) are permitted to receive acidic waste above the liquid level due to limited volume.

DSA Section 3.4.2.12, states that transfer leak initiated Waste Tank Annulus Explosion scenario associated with Type I/II Waste Tanks undergoing Chemical Cleaning is not a credible event, since Type I/II Waste Tank Cleaning transfers that traverse the annulus of a Type I/II Waste Tank are prohibited. It also states that Tank 51 (receipt tank) transfer line that traverses the annulus is only used for vent/drain operation following Type I/II Waste Tank Chemical Cleaning transfers. Based on the small drain volume (<50 gallons), and the robustness of this transfer line segment (stainless steel core pipe and carbon steel jacket), a Tank 51 Annulus Explosion due to Chemical Cleaning transfer receipt is not credible. Therefore, vent and drain operations associated with Chemical Cleaning Transfers are permitted in the transfer line that traverses the Tank 51 annulus.

Implementation Items:

1. TRANSFER PATH for CHEMICAL CLEANING TRANSFERS, and vent and drain operations associated with CHEMICAL CLEANING TRANSFERS shall only be permitted through FDB-2, FDB-3, FDB-4, HDB-2, HDB-7, Valve Boxes 1 through 5, and Valve Box LDB-17, Tank 51 Valve Box, Tank 51 Drain Valve Box, FPP-1, FPP-2, and HPP-3. CHEMICAL CLEANING TRANSFERS that may leak from primary containment to the H-Area Catch Tank and LDB Drain Cell have also been analyzed (Transfer Paths associated with these locations are permitted to have CHEMICAL CLEANING TRANSFERS).

2. Waste Tanks 7, 13, and 51 are the allowable chemical cleaning receipt waste tanks.

3. Prior to TRANSFER INITIATION of a CHEMICAL CLEANING TRANSFER, isolation (i.e., double valve, single valve leak-tested, blank) shall be established to preclude acidic waste from entering pump tanks, waste tanks or transfer facilities outside of the intended TRANSFER PATH. Independent Verification of the TRANSFER PATH alignment shall be performed.

4. Vent and drain of acidic material from CHEMICAL CLEANING TRANSFERS shall only be permitted to FPT-1, HPT-3, and the waste tanks associated with the vent and drain path.

5. Engineering evaluation is required prior to initiation of CHEMICAL CLEANING TRANSFER to ensure sufficient inhibitors are present in the applicable pump tank (FPT-1, HPT-3) to neutralize spent acid drainback from the transfers.

6. Prior to TRANSFER INITIATION of transfer line vent and drain operations associated with CHEMICAL CLEANING TRANSFER, verification shall be performed to ensure that sufficient inhibitors are present in the applicable pump tank (FPT-1, HPT-3) to ensure neutralization of the waste.

7. If inhibitors must be added to the pump tank as described in items 5 & 6, the value determined by the engineering evaluation must be transposed into the governing procedure. Independent Verification of the transposed value shall be performed.

8. If inhibitors must be added to the pump tank as described in items 5 & 6, the inhibitor volume actually added to the pump tank shall be Independently Verified.

9. If inhibitors must be added to the pump tank as described in items 5 & 6, Independent Verification of the inhibitor addition flow path shall be performed.

10. Upon completion of a CHEMICAL CLEANING TRANSFER, an IW flush of the TRANSFER PATH core pipe shall be performed.

11. Within 60 days after initiation of a CHEMICAL CLEANING TRANSFER (or related vent/drain operations), perform one of the following for each Valve Box, DB, PP, LDB Drain Cell, or H-Area Catch Tank that was associated with a CHEMICAL CLEANING TRANSFER:

- CHEMICAL CLEANING TRANSFER (or related vent/drain operation) has been completed,

  AND

- The TRANSFER PATH of the CHEMICAL CLEANING TRANSFER has been flushed with IW,

  AND

- one of the following has been performed:

  - Verify no level increase has occurred in the applicable transfer facility,

    OR

- Verify the material contained in the applicable transfer facility is non-acidic (i.e., pH greater than or equal to 7),

  OR

- Neutralize the acidic material contained in the applicable transfer facility (i.e., restore pH to greater than or equal to 7). An engineering evaluation shall determine the amount of inhibitors required to ensure neutralization.

12. Prior to TRANSFER INITIATION from a DB, PP, VB, LDB Drain Cell, or H-Area Catch Tank that was associated with a CHEMICAL CLEANING TRANSFER (or related vent/drain operations), perform one of the following for the applicable transfer facility. This requirement shall apply to the transfer facility transfers as a result of level increase from the time of TRANSFER INITIATION of a CHEMICAL CLEANING TRANSFER (or related vent/drain operations) through the applicable transfer facility until item 10 above is complete:

    - Verify that the material contained in the applicable transfer facility is non-acidic (i.e., pH greater than or equal to 7),

    OR

    - Neutralize the acidic material contained in the applicable transfer facility (i.e., restore pH to greater than or equal to 7). An engineering evaluation shall determine the amount of inhibitors required to ensure neutralization.

13. If laboratory analysis is utilized to determine pH for item 12, the sample results shall be independently reviewed, i.e., the laboratory sample analysis value shall be confirmed to be greater than or equal to pH 7 by a second person.

14. If litmus paper testing is utilized to verify pH for item 12, Independent Verification of the results is required, i.e., the litmus paper must be verified by a second person to be indicative of greater than or equal to pH 7.

15. If inhibitors must be added to the transfer facility for item 12 and the value determined by the engineering evaluation must be transposed into the governing procedure, Independent Verification of the transposed value shall be performed.

16. If inhibitors must be added to the transfer facility for item 12, the inhibitor volume actually added to the transfer facility shall be Independently Verified.

17. Prior to TRANSFER INITIATION of a CHEMICAL CLEANING TRANSFER from a waste tank in ACIDIC CHEMICAL CLEANING MODE, an engineering evaluation shall be performed to ensure the OA contents in the waste tank is less than or equal to 4 wt.%. This can be established by tracking the cumulative number of gallons of 8 wt.% OA added to the treatment tank and by adding at least that many gallons of WW or IW, adjusted for specific gravity, to the tank.

18. At least one mixing device in the CHEMICAL CLEANING TANK shall be operated a minimum of 1 hour prior to TRANSFER INITIATION of a CHEMICAL CLEANING TRANSFER.

19. Prior to start of waste tank mixing device operation in waste tanks in ACIDIC CHEMICAL CLEANING MODE, verification shall be performed to ensure that sufficient water has been added to the waste tank to ensure the OA content in the waste tank (once mixed) will be less than or equal to 4 wt.%. that a volume of water equal to or greater than the volume of OA has been added to the waste tank to ensure the oxalic acid content in the waste tank (once mixed) will be less than or equal to 4 wt. %. This can be established by tracking the number of gallons of 8 wt.% OA added to the treatment tank and by adding at least that many gallons of WW or IW, adjusted for specific gravity, to the tank. IV is required for the following items:

    - Each OA tanker volume addition and the total (cumulative) amount of OA added for determining the amount of dilution water.
    - Volume of dilution water needed.
    - Volume of dilution water actually added.
    - Dilution water source valve line up, if a totalizer is used for volume determination.

20. Prior to TRANSFER INITIATION of a CHEMICAL CLEANING TRANSFER (or related vent/drain operations), verification shall be performed to ensure that sufficient inhibitors are present in the applicable receipt waste tank to ensure neutralization of the acidic waste. An engineering evaluation shall determine the amount of inhibitors required to ensure neutralization in the receipt waste tank.

21. If inhibitors must be added to the receipt waste tank as described in item 20 and the value determined by the engineering evaluation must be transposed into the governing procedure, Independent Verification of the transposed value shall be performed.

22. If inhibitors must be added to the receipt waste tank as described in item 20, the volume actually added shall be Independently Verified.

23. During receipt of CHEMICAL CLEANING TRANSFERS (or related vent/drain operations), at least one mixing device shall be operating in the applicable receipt waste tank.

24. Prior to TRANSFER INITIATION of a CHEMICAL CLEANING TRANSFER (or related vent/drain operations), the transfer procedure shall Independently Verify that at least one mixing device is operating in the applicable receipt waste tank. Additionally, the transfer procedure shall require shut down of the transfer if it is found that at least one receipt waste tank mixing device is not operating during the transfer.

25. During receipt of CHEMICAL CLEANING TRANSFERS, acidic waste shall enter the receipt waste tank via a flow path below the waste tank liquid level. Prior to TRANSFER INITIATION, the transfer procedure shall perform Independent Verification of the waste transfer valve line-up to ensure that the acidic waste material will enter via a flow path below the receipt waste tank liquid level.

26. Post transfer vent and drain operations into Tank 51 for the transfer line low point located south of Tank 51 are permitted through the transfer line that traverses the annulus and the tank is permitted to receive acidic waste above the liquid level due to limited volume.

4.29 H-AREA TRANSFER FACILITY TRANSIENT FIRE LOADING (TSR 5.8.2.21) (SAC)

ATTRIBUTE REQUIREMENT: 5.8.2.21.s

Prior to TRANSFER INITIATION of a HIGH-REM WASTE TRANSFER through an H-Area transfer facility, transient fire loading energy contribution in the affected transfer facility shall be less than or equal to 630,000 British Thermal Units (approximately 79 lb_{wood} equivalent). (SAC)

> DSA Section 3.4.2.5 "Transfer Facility Fire" assumed maximum amount of readily combustible material contributes no more than 2.5 million BTUs (approximately 313 lb_{wood} equivalent) of energy. The unmitigated consequences of the Transfer Facility Fire accident did not challenge the Offsite EGs (due to the initial conditions established by the Fire Protection Program), but exceeded the Onsite EGs. In the Transfer Facility Fire case, where the Transfer Facility Fire accident unmitigated consequences exceeded the Onsite EGs (i.e., HIGH-REM WASTE TRANSFER through HTF transfer facilities) the mitigated source term for HTF transfer facility fire is reduced by limiting the transient fire loading to approximately 630,000 BTUs (approximately 79 lb_{wood} equivalent). For HIGH-REM WASTE TRANSFERS through an H-Area transfer facility, the Transfer Control Program verifies combustible loading prior to initiating the transfer.

IMPLEMENTATION:

Transient fire loading energy contribution shall be documented in a calculation and may be performed by a visual inspection prior to close-out of the transfer facility or by an analysis of video/photograph(s) from a camera inspection. A Fire Protection Engineer shall provide concurrence of the transient fire loading energy contribution calculation. Verification that transient fire loading energy contribution is within limits prior to TRANSFER INITIATION of HIGH-REM WASTE TRANSFER is performed in accordance with established procedures or engineering evaluation.

Implementation Items:

1. HIGH-REM WASTE TRANSFER procedures shall include verification of transient fire loading energy contribution in the affected H-Area transfer facility is less than or equal to 79 lb_{wood} equivalent prior to initiation of the transfer.

4.30 EVAPORATOR FEED QUALIFICATION PROGRAM (TSR 5.8.2.25) (SAC)

ATTRIBUTE REQUIREMENT: 5.8.2.25.e

Prior to providing waste feed to the 242-25H evaporator, ensure that the supernate nitrite concentration in the feed tank is greater than or equal to 0.0275M.

The Evaporator Feed Qualification Program (CST DSA Section 5.5.4.2.25) also ensures the composition of waste in the 242-25H Evaporator tank complies with the hydrogen generation rate limits prior to transfer to the evaporator pot, and refers to CSTF DSA section 3.4.1.5.5.

IMPLEMENTATION:

See the Evaporator Feed Qualification Program Description Document for limits and implementation actions [Reference 10].

5.0 OTHER COMMITMENTS RELATED TO WASTE TRANSFERS

The following are other commitments related to waste transfers from various documents. These commitments shall be implemented.

5.1 FFA COMMITMENTS (REFERENCE 19)

1. Secondary Containment: Tank Systems will be operated with a leak detection system so that it shall detect the failure of either the primary or secondary containment structure of the presence of any leak of hazardous or radioactive constituents, hazardous substances, or accumulated liquid in the secondary containment system within 24 hours or the earliest practicable time, if DOE can demonstrate that the existing detection technology or site conditions would not allow detection of a leak within 24 hours. (FFA Section IX, Appendix B, C.1(c))

2. Waste tanks Leak Detection and Containment: If the leak was to the environment, within 24 hours after detection of the leak, or if it is demonstrated that it is not possible, at the earliest practicable time, remove as much of the hazardous/radioactive substance as is necessary to prevent further release of hazardous or radioactive substances to the environment and to allow inspection and repair of the tank system(s) to be performed. (FFA Section IX, Appendix B, D.1(b))

3. Waste tanks Leak Detection and Containment: If the leak was to a secondary containment systems, all accumulated materials shall be removed from the secondary containment systems within 24 hours or in as timely a manner as is possible to prevent harm to human health and the environment. (FFA Section IX, Appendix B, D.1(c))

5.2 WASTEWATER PERMIT COMMITMENTS

1. Once waste removal begins on a tank with a leak or crack and the waste is removed to a level below the lowest known leak or crack, that level shall become the maximum operating level of the tank and shall not be exceeded unless the exceedance is a temporary result of the waste removal process. (Reference 3, Special Condition # 6)

2. No tank that leaks or has leaked shall be used for waste receipt without prior approval from DHEC. This condition does not apply to the necessary addition of waste for waste removal purposes. (Reference 3, Special Condition # 7)

3. Based on a review of the Tank Assessment Report, submitted as a requirement of the Federal Facilities Agreement (FFA), Section IX, DHEC has determined that the Type I tanks identified as tanks 2-8 are approvable as equivalent devices for secondary containment. The Type I tanks, however, should only be used for waste receipt when there is no suitably available volume in an approved Type III tank. Furthermore, if any Type I tank develops a leak, which exceeds the capacity of the 5-foot deep secondary containment pan, this approval shall be rescinded and no additional waste shall be directed to these Type I tanks. (Reference 3, Special Condition # 11)

4. Type IV tanks do not meet secondary containment requirements. Tanks 21-24H are fit for use as low level waste receipt tanks until their scheduled waste removal date. (Reference 3)

5. The following five transfer lines are permitted to be used:

   - HDB-5 to Tank 21 (Line 102E)
   - HDB-5 to Tank 22 (Line 103E)
   - HDB-5 to Tank 23 (Line 101E)
   - HDB-5 to Tank 24 (Line 1825)
   - Tank 14 to Tank 13 (Line 21E)

   At the time of the Wastewater permit approval, the lines listed above did not meet the secondary containment (Reference 4). It was proposed that two lines (lines 1825 and 21E) would be decommissioned with the associated tank systems. The other three lines (101E, 102E, 103E) would be evaluated for need of repairing these lines for secondary containment requirements.

   Since the permit approval, HDB-5 to Tanks 21 and 22 transfer lines (102E, 103E) have been modified to meet the secondary containment requirements. Also, DHEC had been informed that HDB-5 to Tank 23 transfer line (101E) will not be modified and will be decommissioned with the associated tank systems. (Reference 4 and Electronic mail to DHEC from Chuck Hayes on 6/25/97)

6. The following two filtrate transfer lines do not meet secondary containment requirements:

   - Line FT-702A (M-M6-H-8213)
   - Line FT-1104A (M-M6-H-8214)

   These two transfer lines are required to be hydrostatic tested every two years to confirm no leakage exists. (Assessment Report Phase I for ITP Treatment Facility). These lines are not in service since the ITP Filtrate Building is not in service and hydrostatic testing is not required per Environmental Compliance Group.

5.3 AUTHORIZATION AGREEMENT COMMITMENTS (REFERENCE 9)

1. Waste transfers into Type I and II Tanks are prohibited unless the transfers are used to retrieve the waste contained in Type I, II or IV Tanks except as follows. Transfer of aluminum laden supernate, from sludge batch preparation, into Tank 241-908F and Tank 241-911H is allowed. Transfer of DWPF recycle into Tank 241-913H is allowed. Transfer of supernate from Tank 241-942H to Tank 241-913H is allowed.

2. Storage of In-Tank Precipitation process precipitate and supernate in Tank 241-949H is only permitted in the event of a leak in the primary containment of Tank 241-948H and following DOE approval of a RESPONSE PLAN.

3. Tank Closure activities may be performed in accordance with the CSTF Safety Basis Documents listed in Manual WSRC-IM-94-10, and applicable Industrial Wastewater Closure Plans, and Tank Specific Closure Modules.

5.4 BEST MANAGEMENT PRACTICES

1. Area radiation monitoring with a local alarm shall be provided at the gang valve house during a jet waste transfer. This includes lift and lance gang valve operations for evaporator operations. Above-ground gang valves are used to route steam to transfer jets. Under normal conditions, the gang valve assembly does not contain waste. However, if steam flow through the gang valve is interrupted during a transfer, and the automatic air blow feature fails and the gang valve does not go to the maintenance position, waste can be sucked back into the gang valve assembly due to trapped collapsing steam. If this occurs, high radiation rates at the gang valve piping could result. The purpose of this monitoring is to provide personnel protection at locations where potentially high radiation rates can exist as a result of a waste transfer.

2. DWPF Qualified Sludge Feed Tank shall be isolated from the TRANSFER PATH by sound double valve isolation, a single leak-tested valve or a blank to prevent contamination of the qualified DWPF feed. Tank 40 Drain Valve Box Valve WTS-V-20 cannot be leak checked. However, this valve is seldom opened and several transfers were performed previously, which placed this valve in the TRANSFER PATH without any indication of leak by. Therefore, valve WTS-V-20 in Tank 40 Drain Valve Box need not be leak checked.

3. If the receiving or transfer tank, excluding evaporator recycle transfers, is a salt tank, identify in the transfer evaluation and approval procedure a requirement to initiate radiation surveys on purge HEPA housing of the transfer/receipt salt tank shiftly for the duration of the transfer. This BMP requirement is based on past experience with purge HEPA filters build-up during the salt tank transfers.

4. To prevent the HPFP from being a LEAK DETECTION LOCATION during a HIGH-REM WASTE TRANSFER using HPT-7 Pump 2, pneumatic valve WTS-FV-6953 (if seismically qualified for operability) shall be leak-tested or have a blank installed. This will preclude HIGH-REM material leakage into the HPFP sump, which would be transferred into FPT-1. Transferring HIGH-REM material into F-Tank Farm is prohibited.

5. Material balances shall be performed for pump tank transfers. For transfers like Canyon to pump tank (Continuous or batch), a single material balance at the end of the transfer is appropriate.

5.5 DOE MANUAL 435.1-1 COMMITMENTS (REFERENCE 24)

1. "Contingency Actions. The following requirements are in addition to those in Chapter I of this Manual.

   (1) Contingency Storage. For off-normal or emergency situations involving high-level waste storage or treatment, spare capacity with adequate capabilities shall be maintained to receive the largest volume of waste contained in any one storage vessel, pretreatment facility, or treatment facility. Tanks or other facilities that are designated for high-level waste contingency storage shall be maintained in an operational condition when waste is present and shall meet all the requirements of DOE O 435.1, Radioactive Waste Management, and this Manual." (DOEM435.1-1 Ch. 2-h.(1))

   This commitment is implemented by the waste transfer approval process via the "Electronic Transfer Approval Form", (ETAF).

6.0 REFERENCES

1. WSRC-SA-2002-00007, "Concentration, Storage, and Transfer Facilities Documented Safety Analysis".

2. S-TSR-G-00001, "Technical Safety Requirements, Concentration, Storage, and Transfer Facilities".

3. SCDHEC Permit to Operate #17,424-IW, "F and H-Area High-Level Radioactive Waste Tank Farms", March 3, 1993.

4. ESH-FSS-92-0811, "Phase II Tank Assessment report for the F and H-Area High Level Radioactive Waste Tank Farms", November 30, 1992.

5. X-CLC-H-00305, "Requirements to Prevent Exceeding the CST 830 DSA Bounding Sludge Slurry Source Term in H-Area Waste Tanks".

6. X-CLC-G-00025, "Requirements to Prevent Exceeding the CST 830 DSA Bounding Slurried Type IV Tank Source Term in H-Area Waste Tanks".

7. WSRC-TR-2002-00260, "Lower Source Terms for F-Area Tanks", by P. D. d'Entremont, J. K. Jeffrey, J. R. Hester, P. J. Hill.

8. Marks' Standard Handbook for Mechanical Engineers, 10th Edition.

9. N-AA-G-00001, "U.S. Department of Energy Savannah River Operations Office and Savannah River Remediation, LLC Authorization Agreement (AA) for the Concentration, Storage, and Transfer Facilities (CSTF)".

10. WSRC-TR-2003-00055, "Evaporator Feed Qualification Program Description Document".

11. X-ESR-H-00052, "Sampling Methodology for DSA Administrative Programs".

12. WSRC-TR-2002-00327, "Tank Farm Corrosion Control Program Description Document".

13. S4-OPS.20, "Crane Operations and Critical Lifts in LW Facilities".

14. U-ESR-G-00032. "Area Radiation Monitor (ARM) Location Program for the EMD Submersible Transfer Pump (STP) Operations".

15. Procedure S4-ENG.8, "Waste Acceptance Criteria, Waste Compliance Plan, and Special Waste Compliance Plan".

16. WSMS-LIC-03-00156, "Inhalation Dose Potential of Pump Pit Sump Contents".

17. WSRC-TR-2003-00157, "A Graded Approach to Salt-Out Evaluations for Waste Transfers in the Tank Farm", J. K. Jeffrey.

18. Deleted.

19. WSRC-OS-94-42 (Administrative Document Number 89-05-FF), "Federal Facility Agreement for the Savannah River Site".

20. N-ESR-G-00001, "High Level Waste Emergency Response Data and Waste Tank Data".

21. M-ESR-S-00015, "An Evaluation of Water Hammer Occurrence in the Tank Farm Waste Transfer System".

22. WSRC-RP-93-900-TL, "Recommended Flow Rates for Flushing the Hydrogard Sampler".

23. WSRC-RP-93-800, "Flushing the H-S Inter-area Transfer Lines".

24. DOE Manual 435.1-1, "Radioactive Waste Management Manual, Chg. 1".

25. X-CLC-G-00062, "LOWREM Transfer Table".

26. X-ESR-F-00056, "Area Radiation Monitor (ARM) Location Program For Above-Ground HIGH-REM Transfers and SMP Operations"

27. Deleted.

28. M-CLC-G-00263, "Over pressurization - F & H Area Waste Transfer System".

29. M-CLC-G-00283, "Volume calculations for FTF/HTF Diversion Boxes, valve Boxes and their Sumps".

30. D. T. Herman, et. al., "Investigating Hydrogen Generation and Corrosion in the Treatment Tank and the Potential Formation of a Floating Layer in the Neutralization Tank During Waste Heel Chemical Cleaning," WSRC-STI-2007-00209, April 30, 2007.

31. U-ESR-G-00015, "Comparison of Operation of Standard Slurry Pumps versus Quad Volute Pumps".

32. Faugl, T., "Determination of Generic Inhalation Dose Potential Uncertainty (2-Sigma)", U-CLC-G-00035

33. East, J.M. and Lewis, M.C., "SRS High Level Waste Chemical and Radiological Consequence Analysis (U)", S-CLC-G-00280, Rev. 0, May 2002.

34. Speight, B.A., "Evaluation of the CSTF Radiological and Chemical Consequence Comparison Basis", G-ESR-H-00232, Rev. 0, June 2017.

35. U-DSA-H-00003, "Concentration, Storage, and Transfer Facilities Documented Safety Analysis Addendum: Operation of 242-25H Evaporator with Leak Sites", April 2018.

36. WSRC-TR-2003-00089, "CSTF Sludge Carryover Minimization Program Description Document".

37. M-ESR-F-00272 Rev. 1, "Engineering Evaluation of Potential Over-pressurization of F-Tank Farm Waste Transfer Lines during Inter-Area Transfers", S. Wallace, July 2018.

38. U-TRT-G-00012, CSTF Tank Closure Cesium Removal Operations Program, D. Martin, October 2018.

ATTACHMENT-1, LEAK DETECTION LOCATIONS

The definition of LEAK DETECTION LOCATION in the TSRs ended up being fairly simple. LEAK DETECTION LOCATIONS support waste primary containment SSCs (e.g., waste tanks, pump tanks, transfer lines). A LEAK DETECTION LOCATION is any structure or component (e.g., sump, leak detection box) credited with accumulating sufficient liquid waste that escapes primary containment to allow observation (e.g., by leak detection instruments or other methods). So, any single waste primary containment may have one or more LEAK DETECTION LOCATIONS associated with it. These will be the LEAK DETECTION LOCATIONS for that primary waste containment regardless of the status of the contents of the primary waste containment (e.g., pump tank empty or full, transfer line actively transferring or drained).

LEAK DETECTION LOCATIONS have Safety Basis requirements placed on them from several drivers. These drivers include LCOs and Administrative Controls. The applicability of several LCOs is dependent on the MODE of Transfer Lines for which certain LEAK DETECTION LOCATIONS are credited. Some of these LCOs are applicable in All MODES and others are applicable only in HIGH-REM TRANSFER MODE. The most straight-forward way to think of how these LCOs will become involved with the conduct of actual WASTE TRANSFERS in the facility is to first consider which transfer line segments (including jumpers) are associated with a given LEAK DETECTION LOCATION. After the correlation of line segments with LEAK DETECTION LOCATIONS is known, determining which LEAK DETECTION LOCATIONS are associated with a given transfer through the LCOs is simply a matter of determining all the line segments along the TRANSFER PATH (up to the first sound isolation point) and listing the LEAK DETECTION LOCATIONS for all those line segments.

In addition to the requirements of the LCOs, the Transfer Control Program places requirements on LEAK DETECTION LOCATIONS. TSR AC 5.8.2.21.c requires monitoring of WASTE TRANSFERS to detect transfer events. The frequency and method (e.g., material balances, level/leak monitoring) of monitoring for a transfer and the required monitoring locations (including consideration of those past the first sound isolation point) shall be determined on an individual basis. So, although the LCOs only place requirements on LEAK DETECTION LOCATIONS along the TRANSFER PATH, some level monitoring of certain LEAK DETECTION LOCATIONS associated with line segments off the TRANSFER PATH may be needed to properly implement the Administrative Control (e.g., sumps that are LEAK DETECTION LOCATIONS for transfer lines / jumpers that are between the first sound isolation point and the second sound isolation point).

LDBs/MLDBs/LPSs that are LEAK DETECTION LOCATIONS for line segments between the first and second sound isolation points are typically excluded from the monitoring requirements of TSR AC 5.8.2.21.c. The exclusion of these LBDs/MLDBs/LPSs is in part based on the high reliability of the welded core pipe that these LEAK DETECTION LOCATIONS support combined with the fact that the transfer is not expected to pressurize the line segments downstream the first sound isolation point.

The annulus for a waste tank is a LEAK DETECTION LOCATION for the transfer lines that pass through the annulus. This is because the portions of the transfer line jacket that pass through the annulus are not credited with being leak-tight. Waste tank annuli that are LEAK DETECTION LOCATIONS for transfer lines on a TRANSFER PATH are typically monitored as part of TSR AC 5.8.2.21.c. Waste tank annuli that are LEAK DETECTION LOCATIONS for line segments beyond the first sound isolation point of a TRANSFER PATH are typically excluded from the monitoring requirements of TSR AC 5.8.2.21.c. The exclusion of these annuli is based in part on the high reliability of the welded core pipe that these LEAK DETECTION LOCATIONS support combined with the fact that the transfer is not expected to pressurize the line segments downstream of the first sound isolation point.

Examples:

Consider the TRANSFER PATH from Pump Tank A to Tank 53 shown in the simplified diagram below.

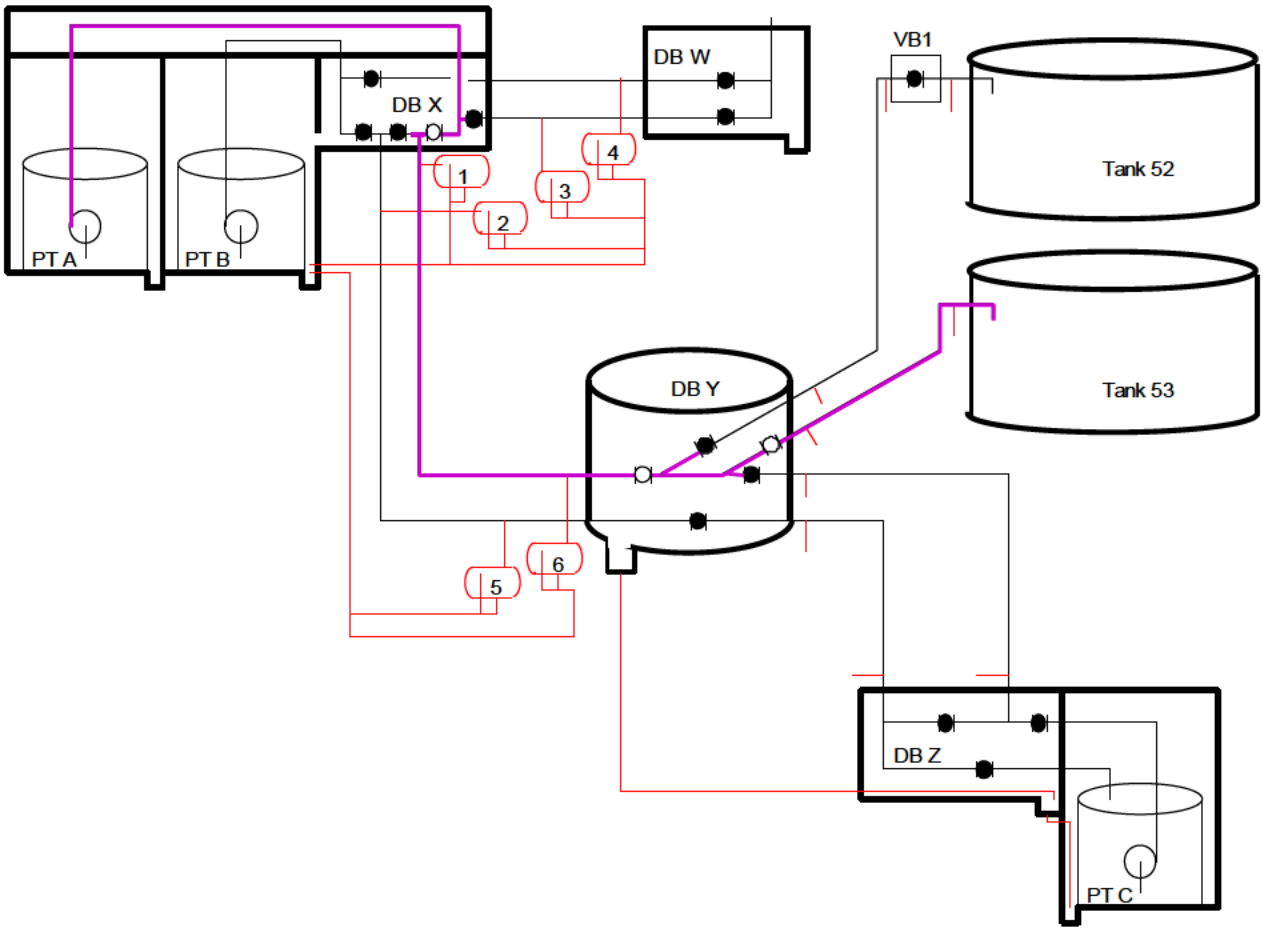

In this diagram, Diversion Box X has a large credited drain from the box into Pump Pit B. Therefore, Diversion Box X is not a credited LEAK DETECTION LOCATION (waste cannot accumulate there). Diversion Boxes Y and Z also have drains, but these drains are too small to ensure that waste will not accumulate. Diversion Boxes Y and Z also have no weirs or similar devices to ensure that leakage into these boxes will be detected before the liquid exits the box.

The TRANSFER PATH is shown in dark solid line in the above diagram. The LEAK DETECTION LOCATIONS for all the line segments/jumpers along the TRANSFER PATH are: Pump Pits A, B, and C, Diversion Boxes Y and Z, LDBs 1 and 6 (and two more LDBs between DB Y and Tank 53 that are not fully shown or identified). Note that the only reason Diversion Box Z and Pump Pit C are LEAK DETECTION LOCATIONS for line segments/jumpers on the TRANSFER PATH is because of the "cascading sump" issue from Diversion Box Y.

LCO requirements (e.g., sump level, conductivity probe operability, or ventilation) typically do not vary based on whether or not a transfer is in progress. LCO requirements are applied based on the MODE the associated PROCESS AREAS are in. Transfer Lines only have two MODES – OPERATION, and HIGH-REM TRANSFER. LCOs of concern typically are applicable to Transfer Lines in either All MODES or only during HIGH-REM TRANSFER MODE. Some of these LCOs also apply to Pump Tanks, which have different MODES from Transfer Lines.

Therefore, even if the transfer from Pump Tank A to Tank 53 was a HIGH-REM WASTE TRANSFER, the conductivity probe in Diversion Box W would not be required to be operable by LCO 3.7.3 as long as all the Transfer Lines for which Diversion Box W was a LEAK DETECTION LOCATION remained in OPERATION MODE. The conductivity probe in Diversion Box Y would be required to be operable because the Transfer Lines and jumpers in DB-Y that are on the TRANSFER PATH would have to be in HIGH-REM TRANSFER MODE to support the transfer. The conductivity probe in Diversion Box Z would also be required to be operable not because any Transfer Lines within the diversion box were in HIGH-REM WASTE TRANSFER MODE, but because of the cascading sump issue from DB-Y.

LCO 3.7.4 for Valve Boxes, Drain Valve Boxes, and the HPFP ends up applying differently to this scenario than the Diversion Box LCOs. Even though the TRANSFER PATH from Pump Tank A to Tank 53 does not include the Transfer Line through Valve Box 1 (TRANSFER PATH stops at first closed valve in Diversion Box Y), if the closed valve in Diversion Box Y is not leak checked the Transfer Line into Valve Box 1 is required to be in HIGH-REM TRANSFER MODE (even though the line segment is not on the TRANSFER PATH of the HIGH-REM WASTE TRANSFER). Thus, if this were the case, the conductivity probes in the LDBs between DBY and VB1 would be required to be operable per LCO 3.7.4. Refer to TSR Section 1.6.4 Item 3 for Transfer Lines in OPERATION MODE.

Administrative Controls are applicable to Waste Transfers separately from LCO requirements. TSR AC 5.8.2.21.c requires monitoring of WASTE TRANSFERS to detect transfer events. This typically requires monitoring not only the sending and receiving tank levels, but also appropriate monitoring of tanks that could potentially receive flow from transfer events. It also requires appropriate monitoring of LEAK DETECTION LOCATIONS – both those along the TRANSFER PATH and the ones associated with Transfer Line segments outside the TRANSFER PATH where transfer events could occur.

Implementing TSR AC 5.8.2.21.c requires monitoring waste tanks, pump tanks, and LEAK DETECTION LOCATIONS for all transfer line segments along the TRANSFER PATH. Additionally, monitoring waste tanks and pump tanks isolated from the TRANSFER PATH by a single non-leak checked valve and LEAK DETECTION LOCATIONS (excluding LDBs/MLDBs/LPSs and waste tank annuli) for transfer line segments isolated from the TRANSFER PATH by a single non-leak checked valve is typically required. Exceptions may be taken to this standard approach of implementing TSR AC 5.8.2.21.c, but they must be justified on a case-by-case basis.

So even though a LEAK DETECTION LOCATION may not have LCO-driven leak detection instrument requirements or level requirements for a transfer, the TSR Administrative Control

Program may determine that certain monitoring requirements are needed in those LEAK DETECTION LOCATIONS during the transfer.