CONCENTRATION, STORAGE, AND TRANSFER FACILITIES

DOCUMENTED SAFETY ANALYSIS

VOLUME 3

Revision 20

August 2017

CONCENTRATION, STORAGE, AND TRANSFER FACILITIES

DOCUMENTED SAFETY ANALYSIS

GENERAL TABLE OF CONTENTS

Volume #	Chapter #	Chapter Title
1	ES	EXECUTIVE SUMMARY
	1	SITE CHARACTERISTICS
	2	FACILITY DESCRIPTION
2	3	HAZARD AND ACCIDENT ANALYSES
3	4	SAFETY STRUCTURES, SYSTEMS, AND COMPONENTS
	5	DERIVATION OF TECHNICAL SAFETY REQUIREMENTS
	6	PREVENTION OF INADVERTENT CRITICALITY
4	7	RADIOLOGICAL PROTECTION
	8	HAZARDOUS MATERIAL PROTECTION
	9	RADIOACTIVE AND HAZARDOUS WASTE MANAGEMENT
	10	INITIAL TESTING, IN-SERVICE SURVEILLANCE AND MAINTENANCE
	11	OPERATIONAL SAFETY
	12	PROCEDURES AND TRAINING
	13	HUMAN FACTORS
	14	QUALITY ASSURANCE
	15	EMERGENCY PREPAREDNESS PROGRAM
	16	PROVISIONS FOR DECONTAMINATION AND DECOMMISSIONING
	17	MANAGEMENT, ORGANIZATION, AND INSTITUTIONAL PROVISIONS
	18	TANK 48 ACCIDENT ANALYSIS

CONCENTRATION, STORAGE, AND TRANSFER FACILITIES

DOCUMENTED SAFETY ANALYSIS

REVISION STATUS

CHAPTER	AFFECTED SECTIONS	REVISION	DATE
ES	All	20	8/2017
1	All	20	8/2017
2	All	20	8/2017
3	All	20	8/2017
4	All	20	8/2017
5	All	20	8/2017
6	All	20	8/2017
7	All	20	8/2017
8	All	20	8/2017
9	All	20	8/2017
10	All	20	8/2017
11	All	20	8/2017
12	All	20	8/2017
13	All	20	8/2017
14	All	20	8/2017
15	All	20	8/2017
16	All	20	8/2017
17	All	20	8/2017
18	All	20	8/2017

CONCENTRATION, STORAGE, AND TRANSFER FACILITIES

DOCUMENTED SAFETY ANALYSIS

REVISION LOG

Rev.	Date	Chapters Affected	Description of Changes
0	12/2002	All Chapters	Initial Issue
1	11/2003	2, 3, 4, 5, 6	See Revision 14 for description of changes.
2	12/2003	ES, 1, 7-17	See Revision 14 for description of changes.
3	12/2004	ES, l, 2, 3, 4, 5, 6, 7, 8, 9, 10, 11, 12, 13, 15, 18	See Revision 14 for description of changes.
4	2/2006	ES, l, 2, 3, 4, 5, 6, 7, 8, 9, 10, 11, 13, 18, 18	See Revision 14 for description of changes.
5	6/2006	2, 3, 4, 5, 13, 18	See Revision 14 for description of changes.
6	10/2006	All Chapters	See Revision 14 for description of changes.
7	2/2007	All Chapters	See Revision 14 for description of changes.
8	11/2007	2, 3, 4, 5, 6, 16	See Revision 14 for description of changes.
9	5/2008	2, 3, 4, 5, 6, 14, 18	See Revision 14 for description of changes.
10	3/2009	All Chapters	See Revision 14 for description of changes.
11	2/2010	All Chapters	See Revision 14 for description of changes.
12	2/2011	All Chapters	See Revision 14 for description of changes.
13	2/2012	1, 2, 3, 4, 5, 6, 10, 11, 13, 15, 16, 18, 18	See Revision 14 for description of changes.
14	7/2012	ES, 2, 3, 4, 5, 6, 8	➢ Incorporated CRFs: HLW-CRF-12004, HLW-CRF-12006, HLW-CRF-12007 ➢ Revised to include Type I/II Waste Tank Chemical Cleaning including resolution of the PISA against F-Tank Farm Type I Waste Tank Chemical Cleaning process

Rev.	Date	Chapters Affected	Description of Changes
15	9/2013	All Chapters	➢ Incorporated CRFs: HLW-CRF-12008, HLW-CRF-12009, HLW-CRF-12011, HLW-CRF-12012, HLW-CRF-12013, HLW-CRF-13002, HLW-CRF-13004, HLW-CRF-13005, HLW-CRF-13007 ➢ Updated Minimum Staff requirements for Control Room Manager ➢ Deleted the H-Area Tank Farm – Chemical Addition System ➢ Clarified requirements for the Chemical Inventory Control Program and Table 3.3-5 ➢ Updated Table 3.4-1 for revised max ventilation flow values ➢ Added a degraded flow aspect for the Transfer Facility Ventilation Systems ➢ Revised the following Programs: Configuration Management, Structural Integrity, WAC, Prohibited Operations, Tank Fill Limit ➢ Modified operability statements and actions associated with transfer facility cell covers ➢ Clarified installed/portable diesel generator requirements

Rev.	Date	Chapters Affected	Description of Changes
16	6/2014	ES, 1, 2, 3, 4, 5, 6, 7, 8, 9, 11, 13, 14, 16, 18, 18	➢ Incorporated CRFs: HLW-CRF-14002, HLW-CRF-14003, HLW-CRF-14005, HLW-CRF-14006 ➢ Aligned Sub-Section titles to match DOE-STD-3009 where appropriate ➢ Updated References ➢ Clarified Unmitigated/Mitigated Progressions, Source Term derivations ➢ Clarified Aerosolization events ➢ Updated Table 5.9-1 for Administrative Controls ➢ Added Waste Tank Overheating scenario for waste tank annulus ➢ Deleted Waste Box Control Program ➢ Revised Static Waste Tank Overheating scenario to Not Credible ➢ Modified Process Area and Mode Applicabilities for jetting of sump ➢ Added new Conditions to facilitate maintenance during cell cover removal in pump pits and ventilated diversion boxes ➢ Updated list of external sources of liquid radioactive waste to the CSTF ➢ Revised verification methodology to conform to current Manual 2S requirements ➢ Made changes for resolution of PISA PI-2014-0001

Rev.	Date	Chapters Affected	Description of Changes
17	6/2015	All Chapters	➢ Incorporated CRFs: HLW-CRF-14007, HLW-CRF-14008, HLW-CRF-14009, HLW-CRF-14011, HLW-CRF-15001, HLW-CRF-15002, HLW-CRF-15003, HLW-CRF-15004, HLW-CRF-15005 ➢ Updated to new SRS Site Characteristics and Program Descriptions (SCPD) document ➢ Added sub headings to Chapter 3 ➢ Modified to recognize consolidation of 242-1F and 241-74F Control Rooms ➢ Removed Mechanical Cleaning for Type IV waste tanks ➢ Updated References ➢ Modified/clarified actions and supporting text for Event Response and Severe Weather Response ➢ Changed the Preventive Maintenance Program to the Nuclear Maintenance Management Program ➢ Updated portions of DSA Chapter 5 for TSR Methodology Manual Rev. 6 changes ➢ Modified Requirements Section in DSA Chapters 1 and 7-17 for consistent approach ➢ Added Prohibited Operation and clarified information regarding fuel powered vehicles/equipment (other than diesel powered) used within Building 299-H ➢ Added isolation requirements to consider system “non-continuous makeup capability” (electrical or mechanical isolation shall contain two independent means of isolation) ➢ Added information about accounting for analytical uncertainty ➢ Updated Low-Rem transfer criteria for Type IV waste tanks ➢ Modified Pump Run Program and Salt Dissolution/Interstitial Liquid Removal Program

Rev.	Date	Chapters Affected	Description of Changes
18	3/2016	ES, 2, 3, 4, 5, 6	➢ Incorporated CRFs: HLW-CRF-15006, HLW-CRF-15007, HLW-CRF-15008, HLW-CRF-15009 ➢ Updated text associated with Tank 16 to recognize tank has been filled with grout ➢ Updated Chapter 3 to recognize new Trapped Gas Release CHA ➢ Revised text to recognize pump speed evaluation of the Transfer Control Program ➢ Modified waste tank primary and annulus volumes based on changes to inputs ➢ Defined terms “settled sludge” and “slurried sludge” per new input ➢ Created new “Controls for Waste Tanks Undergoing Planned Gas Release Activities” subsection ➢ Revised “Waste Tank Quiescent Time Program” subsection

Rev.	Date	Chapters Affected	Description of Changes
19	6/2016	ES, 1, 2, 3, 4, 5, 6, 18	➢ Incorporated CRFs: HLW-CRF-16001, HLW-CRF-16002 ➢ Updated text associated with Tank 12 to recognize the tank has been closed and backfilled with grout. ➢ Modified text to recognize permitted time delay relays for alarms associated with Conductivity Probes. ➢ Revised text for clarifications associated with issues identified in the Extent of Condition review for the Waste Tank Siphon PISA. ➢ Revised text to address changes made to the Mercury Management Program and addition of new controls (Evaporator Mercury Monitoring LCO). Added new Evaporator Modes. This change resolves PISA PI-2015-0001. ➢ Updated References. ➢ Added discussion pertaining to the Tank 50 to Z-Area events in the NPH DBA Sections of Chapter 3. ➢ Added safety function for Very Slow Generation Tanks when receiving a steam jetted transfer. Modified LCO 3.8.1 for applicability of Very Slow Generation Tanks during receipt of a steam jetted transfer. ➢ Modified LCO 3.7.4 (Valve Box, Drain Valve Box, and HPFP Leak Detection Instruments) and created new LCO 3.7.14 (Valve Box, Drain Valve Box, and HPFP Level) to address residual waste levels. ➢ Revised basis discussion for restoring ventilation on pump tanks to account for the presence of the pump tank passive vent and dissolved hydrogen release from a steam jetted transfer from a source less than or equal to 1,200 gallons.

Rev.	Date	Chapters Affected	Description of Changes
20	8/2017	All Chapters	➢ Incorporated CRFs: HLW-CRF-16003, HLW-CRF-17001, HLW-CRF-17002, HLW-CRF-17003 ➢ Modified the status of the 242-16F Evaporator such that it is an "Inactive Location" per the DSA/TSR (does not require additional hazard/accident analysis). ➢ Modified the status of Valve Box 15/16 such that it is an "Inactive Location" per the DSA/TSR (does not require additional hazard/accident analysis). ➢ Updated ventilation system setpoints (and references) for closure of PISA PI-2016-0010 (Errors Associated with Waste Tank Purge Ventilation System "Degraded" Flow Calculation and Setpoints) and associated ESS (U-ESS-H-00012). ➢ Updated Work Product Disclaimer at the beginning of each DSA chapter to the new Disclaimer for AECOM N&E Technical Services, LLC. ➢ Clarified discussion pertaining to radiological versus chemical consequences and added new reference report (G-ESR-H-00232). ➢ Modified "non-waste" transfer definition/criteria with respect to chemical EGs. ➢ Clarified DSA use of radiolytic hydrogen generation rate for Type IV tanks. ➢ Added clarifying discussion to the Valve Box Explosion sub-DBA recognizing that a deflagration could occur for the Tank 40 VB and Tank 51 VB (when the waste material is ESP Sludge Slurry), but that the progression for this DBA (explosion with follow-on spill) is assumed to not occur for mitigated analysis and no consequences are attributed to a VB explosion. ➢ Modified reported "Tank 50" type consequence from the LPDT Cell explosion to the Tank 50 VB explosion. ➢ Added bases justifying why no change is necessary for "required setpoints" for ventilation flow related to in-leakage allowances permitted by Level 4 duct class.

CONCENTRATION, STORAGE, AND TRANSFER FACILITIES

DOCUMENTED SAFETY ANALYSIS

CHAPTER 4

SAFETY STRUCTURES, SYSTEMS, AND COMPONENTS

Revision 20
August 2017

DISCLAIMER

This document was prepared by AECOM N&E Technical Services, LLC (N&E TS) under contract with Savannah River Remediation, LLC (SRR), subject to the warranty and other obligations of that contract and in furtherance of SRR's contract with the United States Department of Energy (DOE). N&E TS' findings represent its reasonable judgments within the time and budget context of its commission and utilizing the information available to it at the time. This document was prepared solely for the DOE for Contract DE-AC09-09SR22505.

Release to and Use by Third Parties. As it pertains to releases of this document to third parties, and the use of or reference to this document by such third parties in whole or in part, neither N&E TS, SRR, DOE, nor their respective officers, directors, employees, agents, consultants or personal services contractors (i) make any warranty, expressed or implied, (ii) assume any legal liability or responsibility for the accuracy, completeness, or usefulness, of any information, apparatus, product or process disclosed herein or (iii) represent that use of the same will not infringe privately owned rights. Reference herein to any specific commercial product, process, or service by trademark, name, manufacture or otherwise, does not necessarily constitute or imply endorsement, recommendation, or favoring of the same by N&E TS, SRR, DOE or their respective officers, directors, employees, agents, consultants or personal services contractors. The views and opinions of the authors expressed herein do not necessarily state or reflect those of the United States Government or any agency thereof.

CONTENTS

Page

4.0 SAFETY STRUCTURES, SYSTEMS, AND COMPONENTS 4.1-1

4.1 INTRODUCTION 4.1-1

4.2 REQUIREMENTS 4.2-1

4.3 SAFETY CLASS STRUCTURES, SYSTEMS, AND COMPONENTS 4.3-1

4.3.1 Transfer Lines (Core Pipe) 4.3-2

4.3.2 Transfer Line Jumpers/Connectors 4.3-4

4.3.3 Transfer Line Isolation Valves 4.3-5

4.3.4 Diversion Boxes (Including High Point Flush Pit) 4.3-7

4.3.5 Diversion Box Sump Steam Jets (Including Steam Supply Piping) 4.3-9

4.3.6 Valve Boxes (Including Drain Valve Boxes) 4.3-10

4.3.7 Pump Pits 4.3-11

4.3.8 Pump Pit Sump Steam Jets (Including Steam Supply Piping) 4.3-13

4.3.9 Pump Tanks 4.3-14

4.3.10 Type I, II, III, IIIA Waste Tanks 4.3-15

4.3.11 Type I, II, III, IIIA Waste Tank High Liquid Level Conductivity Probes and Alarms (Excluding Tank 50) 4.3-17

4.3.12 Type I, II, III, IIIA Waste Tank Purge Ventilation Systems (Excluding Tank 50) 4.3-21

4.3.13 Waste Tank Ventilation Low Flow Interlock 4.3-26

4.3.14 Deleted 4.3-28

4.3.15 Waste Tank Transfer Jets (Including Steam Supply Piping) 4.3-28

4.3.16 242-16H and 242-25H Evaporator Cells 4.3-29

4.3.17 Waste Tank Chromate Water Coil Siphon Breakers 4.3-30

4.3.18 242-16H Evaporator Feed Pump Backflow Prevention Devices 4.3-32

4.3.19 Type I, II, III, IIIA Waste Tank Annulus Transfer Jets (Including Steam Supply Piping) 4.3-33

CONTENTS (continued)

Page

4.4 SAFETY SIGNIFICANT STRUCTURES, SYSTEMS, AND COMPONENTS 4.4-1

4.4.1 Transfer Pump Electrical Breakers/Disconnects 4.4-2

4.4.2 Waste Tank (Including Annulus) Transfer Jet Steam/Air Isolation Valves 4.4-3

4.4.3 Transfer Line Jackets/Encasements 4.4-4

4.4.4 Diversion Box (Including the High Point Flush Pit) Conductivity Probes and High Level Alarms 4.4-5

4.4.5 Diversion Box Ventilation Systems (H-Area Diversion Boxes 6 and 7) 4.4-7

4.4.6 H-Area Diversion Box 4 Passive Vent 4.4-10

4.4.7 Valve Box (Including Drain Valve Box) Conductivity Probes and High Level Alarms 4.4-10

4.4.8 Pump Pit Conductivity Probes and High Level Alarms 4.4-12

4.4.9 Pump Pit/Pump Tank Ventilation Systems with Passive Vents 4.4-14

4.4.10 H-Area Diversion Box 8 Process Vessel Ventilation System 4.4-19

4.4.11 H-Area Diversion Box 8 Diesel Generator 4.4-22

4.4.12 Leak Detection Boxes/Modified Leak Detection Boxes/Leak Probe Sleeves/Clean Out Ports 4.4-25

4.4.13 Leak Detection Box/Modified Leak Detection Box/Leak Probe Sleeve Conductivity Probes and High Level Alarms 4.4-26

4.4.14 F-Area Pump Tank-1 Pulse Tube Agitator Liquid Level Interlock 4.4-28

4.4.15 F-Area Pump Tank-1 Pulse Tube Agitator Air Supply Pressure Relief Valve 4.4-31

4.4.16 LDB Drain Cell 4.4-31

4.4.17 Area Radiation Monitors with Control Room Notification 4.4-32

4.4.18 Influent Manual Isolation Valves 4.4-34

4.4.19 Type IIIA Waste Tank Chromate Water Cooling Coils (Excluding Waste Tank 35) 4.4-35

CONTENTS (continued)

Page

4.4.20 Waste Tank Chromate Water Header Isolation Valves 4.4-36
4.4.21 Deleted 4.4-37
4.4.22 Waste Tank 30 Chromate Water Coil Isolation Valves 4.4-37
4.4.23 Waste Tanks 29, 31, 32, 33, 34, and 35 Type III Chromate Water Cooling Coils 4.4-38
4.4.24 Type IV Waste Tanks 4.4-38
4.4.25 Tank 50 and Type IV Waste Tank Purge Ventilation Systems 4.4-40
4.4.26 Waste Tank Annulus 4.4-44
4.4.27 Type I, II Waste Tank Annulus Ventilation Systems 4.4-45
4.4.28 Type I, II, III, IIIA Waste Tank Annulus Conductivity Probes and High Level Alarms 4.4-48
4.4.29 Waste Tank Transfer Pump/Jet/SMP Risers 4.4-51
4.4.30 Waste Tank Transfer Pump/Jet Riser Conductivity Probes and High Level Alarms 4.4-52
4.4.31 Tank 50 and Type IV Waste Tank High Liquid Level Conductivity Probes and Alarms 4.4-54
4.4.32 Waste Tank Hydrogen Monitor and High Hydrogen Concentration Interlock 4.4-55
4.4.33 H-Area Catch Tank and Catch Tank Encasement 4.4-58
4.4.34 Deleted 4.4-59
4.4.35 242-16H and 242-25H Evaporator Steam Tube Bundles 4.4-59
4.4.36 242-16H and 242-25H Evaporator Lance Air Supply Line Orifices 4.4-60
4.4.37 242-16H and 242-25H Evaporator Lance Steam Supply Line Orifices 4.4-61
4.4.38 242-16H Evaporator Tube Bundle Steam Pressure Control Valve and Tube Bundle Steam Pressure Relief Valve 4.4-61
4.4.39 242-25H Evaporator Lance Steam Pressure Control Valve and Lance Steam Pressure Relief Valve 4.4-62

CONTENTS (continued)

Page

4.4.40 Submersible Mixer Pump Column Pressure Boundary 4.4-63
4.4.41 Submersible Mixer Pump Flush/Motor Pressure Boundary 4.4-64
4.4.42 Submersible Mixer Pump Riser Conductivity Probe Interlock 4.4-65
4.4.43 Submersible Mixer Pump Electrical Breakers/Disconnects 4.4-66
4.4.44 Tank 50 Waste Temperature Monitoring..... 4.4-67
4.4.45 Deleted 4.4-68
4.4.46 Deleted 4.4-68
4.4.47 242-16H and 242-25H Evaporator Mercury Monitoring..... 4.4-68

4.5 REFERENCES 4.5-1

4.6 TABLES 4.6-1

4.7 FIGURES 4.7-1

TABLES

Page

Table 4.2-1 Design Requirements for Safety Class Structures, Systems, and Components 4.6-1

Table 4.2-2 Design Requirements for Safety Significant Structures, Systems, and Components 4.6-2

Table 4.3-1 Safety Class Structures, Systems, and Components 4.6-3

Table 4.3-2 Safety Class Evaluations 4.6-14

Table 4.4-1 Safety Significant Structures, Systems, and Components 4.6-33

Table 4.4-2 Safety Significant Evaluations 4.6-48

FIGURES

Page

Figure 4.3-1 Pump Pit (Typical) 4.7-1

Figure 4.3-2 Conductivity Probe and Alarm Configuration (Typical) 4.7-2

Figure 4.3-3 Waste Tank Purge Ventilation System (Typical) 4.7-3

Figure 4.3-4 Waste Tank Ventilation Low Flow and High Hydrogen Concentration Interlocks 4.7-4

Figure 4.3-5 Evaporator Cell (Typical) 4.7-5

Figure 4.3-6 Waste Tank Transfer Jet 4.7-6

Figure 4.3-7 Chromate Water Siphon Breakers (Typical) 4.7-7

Figure 4.3-8 Chromate Water Supply/Return Distribution Headers for Waste Tanks 29, 30, 31,and 32 ..... 4.7-8

Figure 4.3-9 242-16H Evaporator Feed Pump Backflow Prevention Devices 4.7-9

Figure 4.4-1 Diversion Box Ventilation System (H-Area Diversion Boxes 6 and 7) 4.7-10

Figure 4.4-2 Pump Tank/Pit and Diversion Box Exhaust Ventilation System (Typical) 4.7-11

Figure 4.4-3 H Tank Farm Pump Tanks 2-4 and Diversion Box 2 Exhaust Ventilation System 4.7-12

Figure 4.4-4 H-Area Diversion Box 8 Process Vessel Ventilation System 4.7-13

Figure 4.4-5 H-Area Diversion Box 8 Diesel Generator System 4.7-14

Figure 4.4-6 H-Area Diversion Box 8 Standby Electrical Power System 4.7-15

Figure 4.4-7 F-Area Pump Tank-1 Pulse Tube Agitator Interlocks 4.7-16

Figure 4.4-8 Leak Detection Box Drain Cell 4.7-17

Figure 4.4-9 Area Radiation Monitor and Alarm Circuit (Typical) 4.7-18

Figure 4.4-10 Deleted 4.7-19

FIGURES (continued)

Page

Figure 4.4-11 Waste Tank Installed Hydrogen Monitor Instrumentation Loop (Typical).... 4.7-20

Figure 4.4-12 Catch Tank and Transfer Line Encasements 4.7-21

Figure 4.4-13 Evaporator Tube Bundle (Typical) 4.7-22

Figure 4.4-14 242-16H and 242-25H Evaporator Lance Air Supply Line Orifices..... 4.7-23

Figure 4.4-15 242-16H Evaporator Steam PCV, PRV, and Lance Steam Supply Line Orifice 4.7-24

Figure 4.4-16 242-25H Evaporator Steam PCV, PRV, and Lance Steam Supply Line Orifice 4.7-25

Figure 4.4-17 Deleted 4.7-26

Figure 4.4-18 Submersible Mixer Pump Riser Conductivity Probe Interlock 4.7-27

Figure 4.4-19 SMP Column and Flush/Motor Pressure Boundary..... 4.7-28

Figure 4.4-20 Typical SS Alarm Configuration Using Safety PLC 4.7-29

Figure 4.4-21 Tank 50 Waste Temperature Monitoring..... 4.7-30

Figure 4.4-22 Type I, II Waste Tank Annulus Ventilation System..... 4.7-31

Figure 4.4-23 242-16H and 242-25H Evaporator Mercury Monitoring..... 4.7-32

ACRONYMS AND ABBREVIATIONS

ARM	Area Radiation Monitor
ASME	American Society of Mechanical Engineers
ASTM	American Society for Testing and Materials
ATS	Automatic Transfer Switch
CFR	Code of Federal Regulations
CLFL	Composite Lower Flammability Limit
COP	Clean Out Port
CP	Conductivity Probe
CSTF	Concentration, Storage, and Transfer Facilities
CRW	Chromate Cooling Water
DB	Diversion Box
DBE	Design Basis Earthquake
DBT	Design Basis Tornado
DCS	Distributed Control System
DG	Diesel Generator
dP	differential Pressure
DOE	Department of Energy
DR	Design Requirement
DSA	Documented Safety Analysis
EG	Evaluation Guideline
ESP	Extended Sludge Processing
FC	Functional Classification
FDB	F-Area Diversion Box
FPP	F-Area Pump Pit
FPT	F-Area Pump Tank
gpm	gallon per minute
HDB	H-Area Diversion Box
HEPA	High-Efficiency Particulate Air
HLLCP	High Liquid Level Conductivity Probe
HPP	H-Area Pump Pit
HPT	H-Area Pump Tank
IA	Instrument Air
IEEE	Institute of Electrical and Electronics Engineers
IW	Inhibited Water

ACRONYMS AND ABBREVIATIONS (continued)

LCO	Limiting Condition for Operation
LDB	Leak Detection Box
LFL	Lower Flammability Limit
LPS	Leak Probe Sleeve
MLDB	Modified Leak Detection Box
N/A	Not Applicable
NDTT	Nil-Ductility-Transition Temperature
NMMP	Nuclear Maintenance Management Program
NPH	Natural Phenomena Hazard
PC	Performance Category
PCV	Pressure Control Valve
PLC	Programmable Logic Controller
PMF	Probable Maximum Flood
PMP	Probable Maximum Precipitation
PP	Pump Pit
PRV	Pressure Relief Valve
PS	Production Support
psi	pounds per square inch
psig	pounds per square inch gauge
PTA	Pulse Tube Agitator
PVV	Process Vessel Ventilation
QA	Quality Assurance
SAV	Safety Analysis Value
SC	Safety Class
SDC	Seismic Design Category
SMP	Submersible Mixer Pump
SR	Surveillance Requirement
SRR	Savannah River Remediation LLC
SRS	Savannah River Site
SSCs	Structures, Systems, and Components
SS	Safety Significant
STD	Standard
TSR	Technical Safety Requirement
VB	Valve Box

4.0 SAFETY STRUCTURES, SYSTEMS, AND COMPONENTS

4.1 INTRODUCTION

This chapter of the Documented Safety Analysis (DSA) for the Concentration, Storage, and Transfer Facilities (CSTF) provides details on those facility Structures, Systems, and Components (SSCs) that are designated as Safety Class (SC) and Safety Significant (SS). The SC and SS SSCs of the CSTF are necessary to protect the offsite public, provide Defense-in-Depth, or contribute to worker safety. The determination of which SSCs protect the offsite public, provide Defense-in-Depth, or contribute to worker safety is documented in Chapter 3.

As part of the safety analysis procedure defined in 10 Code of Federal Regulations (CFR) Part 830 (Ref. 1), the engineered safety features that prevent or mitigate the consequences of all potential accidents, including the Design Basis Accidents, must be identified. Also required is a description of the safety functions, interfaces, operating conditions, and performance criteria for the engineered safety features.

The scope of this chapter includes the following:

1. Listing of the SC and SS SSCs for the CSTF (including the required safety functions)
2. Identification of the functional requirements necessary for the safety-related SSCs to perform their safety functions and the general conditions caused by postulated accidents under which the safety-related SSCs must operate
3. Identification of the performance criteria necessary to provide reasonable assurance that the functional requirements will be met for the safety-related SSCs
4. Evaluation of each safety-related SSC to meet the Design Requirements (DRs) needed by the SSC to fulfill its safety function

10 CFR Part 830 (Ref. 1) prescribes the use of a graded approach for the effort expended in safety analyses and the level of detail presented in associated documentation. The graded approach adjusts the magnitude of the preparation effort based on the facility hazards magnitude or severity, the facility complexity, and the facility life-cycle stage.

This chapter does not include Tank 48 Flammability Controls. See Chapter 18 for controls associated with Tank 48 Flammability.

4.2 REQUIREMENTS

This chapter was prepared in accordance with the format and content requirements defined in 10 CFR Part 830 and Department of Energy (DOE)-Standard (STD)-3009-94, (Ref. 1, 2). Safety-related SSCs were identified in accordance with the guidance provided in DOE-STD-3009-94, as well as Procedure Manual E7, Procedure 2.25A, and WSRC-TM-93-9 (Ref. 2, 3, 4).

The safety-related SSCs summarized in Tables 4.3-1 and 4.4-1 were selected based on controls listed in Chapter 3. SC SSCs are evaluated against the standardized SC DRs (summarized in Table 4.2-1) identified in historical DOE Order 6430.1A, (Ref. 5) and applied, as applicable, based upon the system evaluations contained within Section 4.3. Each system evaluation identifies the DRs summarized in Table 4.2-1 with the basis for determining compliance as well as any DR that is not met by the CSTF design and the justification as applicable for an existing SSC.

SS SSCs are evaluated against the standardized SS DRs (summarized in Table 4.2-2) identified in Procedure Manual E7, Procedure 3.41, Backfit Analysis Process (Ref. 6) and applied, as applicable, based upon the system evaluations contained within Section 4.4. Each system evaluation identifies the DRs summarized in Table 4.2-2 with the basis for determining compliance as well as any DR that is not met by the CSTF design and the justification as applicable for an existing SSC.

The Natural Phenomena Hazard (NPH) design criteria for the SSCs are provided in DOE Standard 1021-93 (Ref. 7). For SC SSCs Performance Category 3 (PC-3) were used as applicable and for SS SSCs Performance Category 2 (PC-2) were used as applicable. The system evaluations of the CSTF SSCs design against NPH DRs are presented in Section 4.3 for SC SSCs and Section 4.4 for SS SSCs.

For the purposes of the DSA, seismic design criteria for SSCs are stated as Performance Categories (e.g., PC-2, PC-3) versus Seismic Design Categories (e.g., SDC-2, SDC-3). Some new/replacement SSCs use the equivalent SDC. Refer to References 53 and 54 for the relationship/equivalency between Performance Categories and Seismic Design Categories.

The SSC subsections in Sections 4.3 and 4.4 present the NPH qualification requirements for each SSC (e.g., required during normal operations, and during and following a Seismic Event). For these statements, the term “normal operations” denotes that the SSC is designed to function during non-NPH scenarios and does not relate to process area Modes or other conditions of applicability (refer to Chapter 5 for Mode applicability).

The SSCs selected and listed in Tables 4.3-1 and 4.4-1 perform required SC or SS functions. No other SSCs should be inferred from the Chapter 3 controls as requiring SC/SS classification.

The SC and SS equipment identified in Tables 4.3-1 and 4.4-1 were selected using qualitative judgment based on the Chapter 3 analysis. Original project design and installation of the majority of the SSCs were not done to current SC/SS requirements. A Backfit Process (Ref. 6)

was used to assess credited existing SSCs to the applicable SC/SS criteria. Reference 8 was utilized as guidance to derive the System Evaluation sub-sections in Sections 4.3 and 4.4.

4.3 SAFETY CLASS STRUCTURES, SYSTEMS, AND COMPONENTS

SC SSCs are those SSCs whose preventive or mitigative function is necessary to keep hazardous material exposure to the public below the offsite Evaluation Guidelines (EGs). The EGs specify a radiological dose value of 25 rem Total Effective Dose Equivalent (Ref. 2, Appendix A), to a maximally exposed individual at the site boundary, to be used in identifying SC SSCs. Additional SC criteria are given in Reference 3. The SSCs listed in Table 4.3-1 are designated as SC. The table identifies the Chapter 3 accident(s) or rationale upon which the SC designation is based and summarizes the safety function(s), functional requirement(s), and Technical Safety Requirement (TSR) coverage (Limiting Condition for Operation [LCO] or Design Feature). Further details regarding each of the SSCs in Table 4.3-1 are provided in the sections below.

Some of the SC SSCs provide SS functions as well. This subsection discusses the SC functions as well as SS functions that are provided by the SC SSCs. All SC functions are also SS functions. If an SC SSC provides an SS function, the function is designated as an "SS Function" for the applicable accident. Section 4.4 discusses the SS functions that are not provided by SC SSCs.

In addition to the SSCs classified as SC, several Administrative Controls provide SC functions. These Administrative Controls are specified and discussed further in Chapter 5.

In the following sections, the System Description subsection provides a description of the SC SSC and the basic principles by which it performs its safety function, including simplified drawings where appropriate.

SC SSCs which are housed in the control rooms are considered to meet the DR if they can be shown to perform their safety function assuming both the control room building (including associated motor control centers (MCCs)) remains intact and the SSC is accessible (see Reference 38 for an example of such a case). The CSTF control rooms are not identified as support systems for any credited SSCs or called out as independent SSCs. Control room availability is not assumed in any post-event (e.g., seismic) response scenarios.

As discussed in Chapters 3 and 5, SSCs associated with a particular process area under certain conditions (e.g., Modes defined by Chapter 5) may not be credited with performing an SC function (e.g., Waste Tank Purge Ventilation is not credited as an SC function for Closure Waste Tanks). Since a process area could change Modes, this chapter does not define applicability of an SC function related to the Mode.

Table 4.3-2 provides a Design Criteria Assessment Matrix for each of the SC SSCs; comparing the SC SSC against the fourteen SC DRs that the SSC must meet (Table 4.2-1) to perform its functional requirement(s). In the following sections, the System Evaluation subsection identifies only those DRs not satisfied by the SC SSC and discusses the compensatory/corrective action(s) applied/needed for the SSC to meet the DR. Passive SC SSCs are not required to be redundant if they meet the other applicable DRs. Passive SSCs within credited SC boundaries do not have credible means for failure (other than those specified in the other DRs).

The Savannah River Site (SRS) process piping systems were designed, fabricated, tested and inspected in accordance with B31.1 and B31.3 piping codes (or equivalent) at the time of construction. A data letter (Ref. 9) which describes the code of record for SRS process piping systems supports the CSTF position for complying with the requirements of "DR-9 American Society of Mechanical Engineers (ASME) Section III or Other Applicable Codes" for process system SSCs.

Because of the age of the facilities, the SC Quality Assurance (QA) DRs (identified in DR-10) for many SSCs are not met. When the SSCs were designed, procured, and installed, the QA requirements of the time were used to ensure the SSC met the operational function required. Based on the following actions, the current SC QA requirements for the SSCs are deemed to have been satisfied:

- The SSCs were tested at initial installation and have a history of satisfactory performance
- The SSCs are maintained and tested to current SC QA requirements
- The SSCs are inspected and tested periodically as part of the Structural Integrity Program, TSRs, maintenance programs, and other facility programs as appropriate

The F-Area Tank Farm and H-Area Tank Farm Control Room Consolidation Projects relocate or relocated alarms into the 241-2H Control Room. These projects have utilized previously installed fiber optic cable, install new fiber optic cable, or plan new installation of optical fibers through cable routing and support systems which do not meet some of the DRs for SSCs stated in Table 4.3-2. The fiber optic cable design and multiplexing the alarm signals has a negligible impact on the overall failure probability and is considered compliant with the DRs if the following requirements are met (Ref. 40, 46, 47, 48, 49, 50, 51):

- Alarm signals using optical fibers are not credited to perform safety functions during or after NPH events, fire or explosion events, or internal hazard events
- Signals from redundant SC trains shall not be transmitted over the same optical fiber
- Non-SC signals shall not be transmitted over the same optical fiber as SC signals
- Transmitted alarm signals must be of a fail-safe design (i.e., alarm occurs on circuit interruption)
- Alarm instrument loops using fiber optic transmission are periodically tested

4.3.1 TRANSFER LINES (CORE PIPE)

4.3.1.1 Safety Function and Functional Requirements

The Transfer Lines (Core Pipe) provide passive containment of liquid waste to prevent radioactive material leaks and spills into a transfer facility, evaporator cell, transfer line jacket/encasement, Waste Tank annuli, or to the environment. Transfer Lines (Core Pipe) also provide passive containment of acidic waste material during Chemical Cleaning Transfers. The Transfer Line (Core Pipe) integrity is required during normal operations, and during and

following a Seismic Event. Flexible hose may be utilized for transfers. If utilized for Contingency Transfer System transfers, the primary hose of the flexible hose-in-hose transfer line is not required during and following a Seismic Event and is required to be SS only. The Transfer Line (Core Pipe) is designed or protected from corrosion, over pressurization, and external impacts to prevent transfer line leaks and spills. No Transfer Line (Core Piping) leakage is permitted.

Transfer Lines (Core Pipe) are located below grade or shielded to reduce personnel exposure.

Transfer Lines (Core Pipe) are credited as an SC control for the following event:

- Seismic Event

Transfer Lines (Core Pipe) are credited as an SS control, having the same safety function and functional requirements, for the following events:

- Evaporator Overflow, Leaks, and Spills (242-16H only)
- Transfer Facility Explosions
- Transfer Line and Transfer Line Jacket/Encasement Explosions
- Transfer Error/SMP Waste Release
- Waste Tank Annulus Explosion (Tank 50 Transfer Lines [Core Pipe] that traverse through the annulus, including the Tank 50 Valve Box [Tank 50 VB] drain line)

4.3.1.2 System Description

Waste transfer lines are constructed of a stainless or carbon steel primary core pipe typically having a secondary containment around the core pipe. Those lines that are above or near grade level are shielded to minimize radiation exposure to personnel. The containment boundary of the Transfer Line (Core Pipe) includes inline valves and the Flush Water System upstream piping to the first sound isolation point. The secondary containments are either jackets constructed of carbon steel, stainless steel, cement-asbestos, encasements constructed of concrete, or process area boxes/cells (e.g., VBs, Pump Pits [PPs], Diversion Boxes [DBs], evaporator cells). Core pipe not fitting the above description (e.g., flexible hose) may be used as a transfer line.

Waste transfer lines are typically sloped or graded to be self-draining and, where a pipe transitions from one size to another, the bottom of the pipe is generally aligned to prevent a weir effect, which would prevent waste from fully draining to the intended tank or drain location. The Contingency Transfer System flexible hose-in-hose transfer line high point is designed to continuously slope back to the annulus and to the waste tank, permitting free draining to prevent residual waste material hold-up in the transfer line.

4.3.1.3 System Evaluation

Functionality is assured through the implementation of the Structural Integrity Program, Corrosion Control Program, and associated testing/inspection. The Transfer Lines (Core Pipe) are periodically tested under the Structural Integrity Program to ensure proper integrity of these

passive features. However, some segments of a Transfer Line (Core Pipe) are configured such that an integrity test is not physically possible. In these situations, the Structural Integrity Program will require a specific engineering evaluation (at the same frequency as integrity tests are required for those segments which are testable) to provide adequate justification for using these transfer line segments.

The associated section of Table 4.3-2 summarizes the DR evaluation for the Transfer Lines (Core Pipe). A general assessment of the applicable DRs is provided below.

DR-7 Equipment Environment Consideration

Some of the Transfer Line (Core Pipe) segments are constructed of carbon steel that can degrade from acidic waste transfers. The Transfer Line (Core Pipe) is required to provide passive containment of acidic waste material during Chemical Cleaning Transfers and degradation of the carbon steel Transfer Line (Core Pipe) segments may prevent the SSC from adequately performing its safety function. Based on the reason/discussion stated below, the carbon steel Transfer Line (Core Pipe) segments are deemed acceptable to meet their SC requirements:

- The Corrosion Control Program shall establish controls (e.g., flushing) to minimize corrosion such that it will not impact the ability of the carbon steel Transfer Line (Core Pipe) segments to perform its function when required.

4.3.2 TRANSFER LINE JUMPERS/CONNECTORS

4.3.2.1 Safety Function and Functional Requirements

The Transfer Line Jumpers/Connectors provide passive containment of liquid waste to prevent radioactive material releases and spills into a transfer facility or evaporator cell. Transfer Line Jumpers/Connectors also provide passive containment of acidic waste during Chemical Cleaning Transfers. The Transfer Line Jumpers/Connector integrity is required during normal operations, and during and following a Seismic Event except for “drip-wise” leakage (discussed below). The Transfer Line Jumpers/Connectors are designed or protected from corrosion, over pressurization, and external impacts to prevent jumper releases and spills. Transfer Line Jumpers/Connectors along a transfer path are permitted to have “drip-wise” leakage. “Drip-wise” leakage shall not be a continuous flow of material or spray. “Drip-wise” leakage shall not exceed the initial waste volumes given in Chapter 3 within a 30-day period.

Transfer Line Jumpers/Connectors are credited as an SC control for the following event:

- Seismic Event (242-16H Evaporator Cell transfer jumpers are required to perform the SS function only)

Transfer Line Jumpers/Connectors are credited as an SS control, having the same safety function and functional requirements, for the following events:

- Evaporator Overflow, Leaks, and Spills (242-16H only)
- Transfer Line and Transfer Line Jacket/Encasement Explosions

- Transfer Facility Explosions
- Transfer Error/SMP Waste Release

4.3.2.2 System Description

Transfer Line Jumpers are specially fabricated line segments (some containing valves), with connectors on each end. They are installed in DBs, VBs, evaporator cells, and PPs from one transfer line termination nozzle to another transfer line termination nozzle to allow multiple transfers without re-jumpering for specific transfers.

4.3.2.3 System Evaluation

Functionality is assured through the implementation of the Structural Integrity Program and associated testing/inspection.

The associated section of Table 4.3-2 summarizes the DR evaluation for the Transfer Line Jumpers/Connectors. Transfer Line Jumpers/Connectors meet the DRs for an SC SSC.

4.3.3 TRANSFER LINE ISOLATION VALVES

4.3.3.1 Safety Function and Functional Requirements

The Transfer Line Isolation Valves provide passive containment of liquid waste to prevent radioactive material releases and spills into a transfer facility. The 242-16H Evaporator Isolation Valves provide passive containment of the acidic waste material in the evaporator (during chemical cleaning operations) to prevent the introduction of acidic material into a waste tank.

Transfer Line Isolation Valves boundary integrity is required during normal operations, and during and following a Seismic Event except for “drip-wise” leakage (discussed below). The 242-16H Evaporator Isolation Valve boundary integrity is required during chemical cleaning operations, and during and following a Seismic Event (during chemical cleaning) except for external “drip-wise” leakage (discussed below). Transfer Line Isolation Valves are designed or protected from corrosion, over pressurization, and external impacts to prevent valve body leaks and spills. The Transfer Line Isolation Valves boundary integrity along a transfer path are permitted to have “drip-wise” leakage. “Drip-wise” leakage shall not be a continuous flow of material or spray. “Drip-wise” leakage shall not exceed the initial waste volumes given in Chapter 3 within a 30-day period.

Transfer Line Isolation Valves are credited as an SC control for the following events:

- Waste Tank Explosion (242-16H Evaporator Isolation Valves only)
- Waste Tank Annulus Explosion (242-16H Evaporator Isolation Valves only)
- Waste Tank/Pump Tank Overheating (242-16H Evaporator Isolation Valves only)
- Waste Tank Wall Failure (242-16H Evaporator Isolation Valves only)
- Siphon/Pump-Out Event (242-16H Evaporator Isolation Valves only)

- Seismic Event

The SS function of the Transfer Line Isolation Valves is to provide passive containment of liquid waste to prevent radioactive material releases and spills into a transfer facility. Transfer line isolation valves also provide passive containment of acidic waste material during Chemical Cleaning Transfers. Additionally, Transfer Line Isolation Valves prevent a radiological material release to the environment by providing for manual isolation of a transfer path (i.e., equipment needed to stop a transfer, siphon). Transfer Line Isolation Valves are required to isolate a transfer line during transfer operations and following a Seismic Event.

Transfer Line Isolation Valves (excluding 242-16H Evaporator Isolation Valves) are credited as an SS control for the following events:

- Seismic Event
- Transfer Error/SMP Waste Release
- Transfer Facility Explosions
- Transfer Line and Transfer Line Jacket/Encasement Explosions
- Pump Pit and Pump Tank Explosion

4.3.3.2 System Description

Transfer Line Isolation Valves are typically manually operated ball valves on jumpers installed in DBs, VBs, PPs, the 242-16H Evaporator, etc. or on pump discharge piping in transfer pump risers that form the transfer route. The valves are used for isolation purposes. Selection of the isolation valves is based on operator accessibility and operation during accident and post-seismic event conditions.

4.3.3.3 System Evaluation

Functionality is assured through the implementation of the Structural Integrity Program and Nuclear Maintenance Management Program (NMMP) and associated testing/inspection.

The associated section of Table 4.3-2 summarizes the DR evaluation for the Transfer Line Isolation Valves. The 242-16H Evaporator Isolation Valves are designed, procured, installed, tested, and maintained as SC equipment and meet the DRs for an SC SSC. Therefore, the discussion below on the applicable DRs does not apply to the 242-16H Evaporator Isolation Valves. A general assessment of the applicable DRs is provided below.

DR-7 Equipment Environment Consideration

Some of the Transfer Line Isolation Valves contain Teflon® seats that can swell or crack in harsh radiological conditions. The valves are required to be closed to stop a transfer and swelling of the valve seat may prevent the SSC from adequately performing its safety function. Many of these valve seats have been replaced to eliminate this problem; therefore, only a limited number with this vulnerability may still exist. Based on the reason/discussion stated below, the Transfer Line Isolation Valves are deemed acceptable to meet their SC requirements:

- An evaluation prior to each High-Rem waste transfer of the associated Transfer Line Isolation Valves shall be performed to assure that the ability to stop transfers is maintained for the applicable credited transfer isolation valves. If the isolation valve for that transfer has a Teflon® seat, the evaluation shall identify what, if any, additional measures need to be taken.

DR-13 Test Requirements

Some of the Transfer Line Isolation Valves that are located in DBs and VBs cannot be conclusively tested to show that they fully close. Based on the reasons/discussions stated below, the Transfer Line Isolation Valves are deemed acceptable to meet their SC requirements:

- If a valve were to fail to fully close, there are numerous non-credited ways to accomplish the safety function of stopping transfers.
- The changing levels in the affected tanks will alert the operators that the transfer has not been stopped allowing them to take appropriate action.

4.3.4 DIVERSION BOXES (INCLUDING HIGH POINT FLUSH PIT)

4.3.4.1 Safety Function and Functional Requirements

DBs (including the High Point Flush Pit) provide passive confinement to minimize the potential for a release of radiological material to the environment. DB structural integrity is required during normal operations, during an external fire event, and during and following a Seismic Event. If the DB structure survives during a Tornado/High Winds Event, the DB structure provides mitigation for a cell explosion through passive confinement. The DB structure is not required to withstand high winds (i.e., the structure is not required to be PC-2 high wind qualified) since loss of confinement prior to the event would prevent the event (i.e., the flammable vapors would not accumulate). For a Seismic Event, DB structural integrity is required to support transfer line integrity (II/I). DBs are designed to withstand design loading and external impact events to prevent their collapse and subsequent damage to internal components DBs are constructed of non-combustible material to ensure that a fire outside the DB does not cause a complete failure of the piping, jumpers, and valving inside the DB.

DBs (including the High Point Flush Pit) are credited as an SC control for the following event:

- Seismic Event

In addition to having the same safety function and functional requirements as it does for SC, an SS function of the DBs is to support ventilation system operation (where applicable). Another SS function of the DBs varies depending on their capacity and depending on whether or not they are in the transfer path for a High-Rem, Low-Rem, or ESP Sludge Slurry transfer.

DBs that have an overflow capacity of greater than or equal to 15,000 gallons of liquid waste are designed and maintained to prevent an unrestricted release flowpath to the environment to reduce the effects of a radiological material release or spill. The DB structure is designed to provide airborne waste confinement following a release in the DB.

DBs that have an overflow capacity of less than 15,000 gallons of liquid waste and those DBs that are in the transfer path for High-Rem or ESP Sludge Slurry (H-Area Diversion Box [HDB] HDB-7 only) transfers provide a containment feature to channel liquid, such that the level detection equipment can perform its function in order to mitigate an event..

DBs that are in the transfer path for Low-Rem waste transfers provide an airborne waste confinement function.

F-Area Diversion Box (FDB) FDB-4 is equipped with an opening in the sump (6 inch x 12 inch) that allows any leaked waste to directly drain into F-Area Pump Pit (FPP) FPP-2. Therefore, leak detection capabilities within FDB-4 are not required.

The DB cell covers and plugs are an integral component of each DB and are necessary to fulfill the SS confinement function. These cell covers and plugs help form the boundary for airborne/aerosolized waste confinement for some events. The functionality of the cell covers and plugs is to remain in place during DB activities that have the potential to release airborne/aerosolized waste. For the DB explosion event, the DB provides an overall gross confinement function and it is recognized that the explosion pressures could dislodge the cell plugs and that unrestrained cell plugs may not remain in place.

There are many activities that take place in the CSTF that require equipment to be installed through DB cell plugs, in addition to temporary work that requires cell plug removal. Some activities (e.g., liquid/vapor sampling) may have the cell plug(s) removed for the duration of the activity, but these activities are short in duration, typically controlled by procedure or work instruction, and represent a minimal time at risk. Longer duration activities (e.g., camera installed for periodic level monitoring) with the cell plug(s) removed, require the installation of temporary covers to ensure the safety function of the DB is met. Longer duration activities requiring cell plug removal (without installation of temporary covers) are acceptable, provided Engineering determines that the safety function of the DB is not compromised by the openings (e.g., ability of the DB to provide airborne confinement for aerosolization [in conjunction with active ventilation]).

DBs (including the High Point Flush Pit) are credited as an SS control for the following events:

- Transfer Error/SMP Waste Release
- Transfer Facility Explosions

- Aerosolization Events (HDB-4, HDB-5, HDB-6, HDB-7, and HDB-8 only)
- Transfer Line and Transfer Line Jacket/Encasement Explosions
- Tornado/High Winds Event
- Wildland Fire

4.3.4.2 System Description

DBs, including the High Point Flush Pit, are reinforced concrete structures containing transfer line nozzles to which jumpers are connected to direct waste transfers to a desired location. The majority of the DB is located below ground and is either stainless steel lined or sealed with water proofing compounds to minimize ground water intrusion. Except for FDB-4 (as discussed above), the DBs contain conductivity probes that alarm in the associated control rooms. The High Point Flush Pit drain is required to be plugged to support the operation of the conductivity probes and prevent the draining of waste into the transfer line jacket. See Chapter 2, Figure 2.4-12.

DBs may be vented by a ventilation system containing a High-Efficiency Particulate Air (HEPA) filter and fan, directly or in conjunction with an adjoining PP ventilation system; or have either a passive vent line with an installed HEPA filter (e.g., HDB-4); or no ventilation system (e.g., HDB-5).

4.3.4.3 System Evaluation

Functionality is assured through the implementation of the Structural Integrity Program and associated testing/inspection.

The associated section of Table 4.3-2 summarizes the DR evaluation for the DBs (including the High Point Flush Pit). DBs (including the High Point Flush Pit) meet the DRs for an SC SSC.

4.3.5 DIVERSION BOX SUMP STEAM JETS (INCLUDING STEAM SUPPLY PIPING)

4.3.5.1 Safety Function and Functional Requirements

The DB Sump Steam Jets (including steam supply piping inside the DB) provide passive containment of the motive steam/air to prevent radioactive material aerosolization and its subsequent release from the DB. The DB Sump Steam Jets (including steam supply piping inside the DB) are constructed of corrosion resistant material. The DB Sump Steam Jets (including steam piping inside the DB) boundary integrity is required during normal operations, and during and following a Seismic Event to prevent releasing steam/air into the waste material contained in the DB. Steam/air leakage is permitted at the steam supply line connectors for the sump transfer jets, provided the steam/air is not impinging on liquid waste contained in the DB.

DB Sump Steam Jets (including steam supply piping inside the DB) are credited as an SC control for the following events:

- Aerosolization Events
- Seismic Event

4.3.5.2 System Description

DB Sump Steam Jets (including steam supply piping inside the DB) are constructed of stainless steel. The stainless steel steam supply line from the steam supply connector, the jet assembly, and the jet discharge line up to and including the discharge connector are SC.

4.3.5.3 System Evaluation

Functionality is assured through the implementation of the Structural Integrity Program and associated testing/inspection.

The associated section of Table 4.3-2 summarizes the DR evaluation for the DB Sump Steam Jets (including steam supply piping inside the DB). DB Sump Steam Jets (including steam supply piping inside the DB) meet the DRs for an SC SSC.

4.3.6 VALVE BOXES (INCLUDING DRAIN VALVE BOXES)

4.3.6.1 Safety Function and Functional Requirements

VBs (including Drain VBs) provide passive confinement to minimize the potential for a release of radiological material to the environment. VB structural integrity is required during normal operations, during an external fire event, and during and following a Seismic Event. If the VB structure survives during a Tornado/High Winds Event, the VB structure provides mitigation for a cell explosion through passive confinement. The VB structure is not required to withstand high winds (i.e., the structure is not required to be PC-2 high wind qualified) since loss of confinement prior to the event would prevent the event (i.e., the flammable vapors would not accumulate). For a Seismic Event, VB structural integrity is required to support transfer line integrity (II/I). VBs are designed to withstand design loading and external impacts to prevent its collapse and subsequent damage to internal components.

VBs (including Drain VBs) are constructed of non-combustible material to ensure that a fire outside the VB does not cause a complete failure of the piping, jumpers and valving inside the VB.

VBs (including Drain VBs) are credited as an SC control for the following event:

- Seismic Event

In addition to having the same safety function and functional requirements as it does for SC, the SS function of the VBs (including Drain VBs) is to provide a containment feature to channel liquid, such that the level detection equipment can perform its function to mitigate an event.

VBs (including Drain VBs) are credited as an SS control for the following events:

- Transfer Line and Transfer Line Jacket/Encasement Explosions
- Transfer Facility Explosions
- Transfer Error/SMP Waste Release
- Tornado/High Winds Event
- Wildland Fire

4.3.6.2 System Description

VBs (including Drain VBs) are equipped with one or more conductivity probes and associated control room alarms. Leakage collects in the bottom of the VB/Drain VB and drains back to the associated waste tank/riser, DB, transfer line jacket, drain cell, or Leak Detection Box (LDB). The drain lines of some VBs are plugged to support the operation of the conductivity probes. VBs are generally located adjacent to the tanks they serve. See Chapter 2, Figure 2.4-13.

4.3.6.3 System Evaluation

Functionality is assured through the implementation of the Structural Integrity Program and associated testing/inspection.

The associated section of Table 4.3-2 summarizes the DR evaluation for the VBs (including Drain VBs). VBs (including Drain VBs) meet the DRs for an SC SSC.

4.3.7 PUMP PITS

4.3.7.1 Safety Function and Functional Requirements

PPs provide passive confinement to minimize the potential for a release of radioactive material to the environment. PP structural integrity is required during normal operations, during an external fire event, and during and following a Seismic Event. If the PP structure survives during a Tornado/High Winds Event, the PP structure provides mitigation for a cell explosion through passive confinement. The PP structure is not required to withstand high winds (i.e., the structure is not required to be PC-2 high wind qualified) since loss of confinement prior to the event would prevent the event (i.e., the flammable vapors would not accumulate). For a Seismic Event, PP structural integrity is required to support transfer line integrity (II/I). PPs are designed to withstand design loading, external impacts and external fire to prevent their collapse and subsequent damage to internal components.

PPs are constructed of non-combustible material to ensure that a fire outside or inside the PP does not cause the complete failure of the piping, jumpers and valving inside the PP.

PPs are credited as an SC control for the following event:

- Seismic Event

In addition to having the same safety function and functional requirements as it does for SC, the SS function of the PPs is to provide a containment feature to channel liquid to the level detection equipment to mitigate an overflow of the PP and support PP ventilation system operation.

The PP cell covers and plugs are an integral component of each PP and are necessary to fulfill the SS confinement function. These cell covers and plugs help form the boundary for airborne/aerosolized waste confinement for some events. The functionality of the cell covers and plugs is to remain in place during PP activities that have the potential to release airborne/aerosolized waste. For the PP explosion event, the PP provides an overall gross confinement function and it is recognized that the explosion pressures could dislodge the cell plugs and that unrestrained cell plugs may not remain in place.

There are many activities that take place in the CSTF that require equipment to be installed through PP cell plugs, in addition to temporary work that requires cell plug removal. Some activities (e.g., liquid/vapor sampling) may have the cell plug(s) removed for the duration of the activity, but these activities are short in duration, typically controlled by procedure or work instruction, and represent a minimal time at risk. Longer duration activities (e.g., camera installed for periodic level monitoring) with the cell plug(s) removed, require the installation of temporary covers to ensure the safety function of the PP is met. Longer duration activities requiring cell plug removal (without installation of temporary covers) are acceptable, provided Engineering determines that the safety function of the PP is not compromised by the openings (e.g., ability of the PP to provide airborne confinement for aerosolization [in conjunction with active ventilation]).

PPs are credited as an SS control for the following events:

- Transfer Line and Transfer Line Jacket/Encasement Explosions
- Transfer Facility Explosions
- Pump Pit and Pump Tank Explosion
- Transfer Error/SMP Waste Release
- Aerosolization Events
- Waste Tank/Pump Tank Overheating
- Tornado/High Winds Event
- Wildland Fire
- Loss of Offsite Power

4.3.7.2 <u>System Description</u>

PPs are reinforced concrete structures located below grade at the low points of transfer lines and are usually lined with stainless steel. All PPs (except H-Area Pump Pit [HPP] HPP-1) house a pump tank. PPs provide containment for the pump tanks. PPs contain sumps for the collection and detection of leakage.

The PPs support the operation of the pump tanks and jumpers in the performance of their SC function. See Figure 4.3-1.

4.3.7.3 System Evaluation

Functionality is assured through the implementation of the Structural Integrity Program and associated testing/inspection.

The associated section of Table 4.3-2 summarizes the DR evaluation for the PPs. PPs meet the DRs for an SC SSC.

4.3.8 PUMP PIT SUMP STEAM JETS (INCLUDING STEAM SUPPLY PIPING)

4.3.8.1 Safety Function and Functional Requirements

The PP Sump Steam Jets (including steam supply piping inside the PP) provide passive containment of the motive steam/air to prevent radioactive material aerosolization and its subsequent release from the PP. The PP Sump Steam Jets (including steam supply piping inside the PP) are constructed of corrosion resistant material. The PP Sump Steam Jets (including steam supply piping inside the PP) boundary integrity is required during normal operations, and during and following a Seismic Event to prevent releasing steam/air into the waste material contained in the PP. Steam/air leakage is permitted at the steam supply line connectors for the sump transfer jets, provided the steam/air is not impinging on liquid waste contained in the PP.

PP Sump Steam Jets (including steam supply piping inside the PP) are credited as an SC control for the following events:

- Aerosolization Events
- Seismic Event

4.3.8.2 System Description

The PP Sump Steam Jets (including steam supply piping inside the PP) are constructed of stainless steel. The stainless steel steam supply line from the steam supply connector, the jet assembly, and the discharge line up to the penetration into the pump tank are SC.

4.3.8.3 System Evaluation

Functionality is assured through the implementation of the Structural Integrity Program and associated testing/inspection.

The associated section of Table 4.3-2 summarizes the DR evaluation for the PP Sump Steam Jets (including steam piping inside the PP). PP Sump Steam Jets (including steam piping inside the PP) meet the DRs for an SC SSC.

4.3.9 PUMP TANKS

4.3.9.1 Safety Function and Functional Requirements

Pump Tanks provide passive containment to minimize the potential for a release of radioactive material to the environment. Pump Tank structural integrity is required during normal operations, and during and following a Seismic Event. Pump Tanks are designed or protected from design loading, corrosion, over pressurization, and external impacts to prevent Pump Tank failure.

Pump Tanks are credited as an SC control for the following event:

- Seismic Event

In addition to having the same safety function and functional requirements as it does for SC, the SS function of the Pump Tanks is to support Pump Tank ventilation system operation.

Pump Tanks are credited as an SS control for the following events:

- Pump Pit and Pump Tank Explosion
- Transfer Error/SMP Waste Release
- Aerosolization Events
- Waste Tank/Pump Tank Overheating
- Loss of Offsite Power (HDB-8 Complex Pump Tanks only)

4.3.9.2 System Description

Pump Tanks are located in all PPs, except HPP-1. The PPs provide containment for the Pump Tanks. Each stainless steel pump tank is equipped with a passive vent (excluding H-Area Pump Tanks (HPTs) HPT-7, HPT-8, HPT-9, and HPT-10) and an overflow line to the PP sump. Pump tanks are vented by the PP ventilation system and passive vents. Tank penetrations and vent paths protect the tank against overpressure and de-pressurization conditions. Pump Tanks contain non-credited dip tube level detection for monitoring the status of waste transfers and pumps/transfer jets to transfer waste out of the tank. See Figure 4.3-1.

4.3.9.3 System Evaluation

Functionality is assured through the implementation of the Structural Integrity Program and associated testing/inspection.

The associated section of Table 4.3-2 summarizes the DR evaluation for the Pump Tanks. Pump Tanks meet the DRs for an SC SSC.

4.3.10 TYPE I, II, III, IIIA WASTE TANKS

4.3.10.1 Safety Function and Functional Requirements

Type I/II Chemical Cleaning Waste Tanks provide passive confinement to mitigate an airborne radiological material release. The tanks also support the operation of the ventilation system. Type I, II Waste Tank structural integrity (tank top only) is required during normal operations, during an external fire event, during and following a Tornado/High Winds Event, and during and following a Seismic Event. The waste tank structure is considered to be PC-2 high wind qualified by virtue of its underground location. Type I, II Waste Tanks are designed to withstand design loading, external impacts, external fire and flooding (Tanks 9, 10, and 11).

For the remaining waste tanks, Type I, II, III, IIIA Waste Tanks provide passive containment for the tank contents to prevent a release of liquid radiological material to the environment and provide passive confinement to mitigate an airborne radiological material release. The tanks also support the operation of the ventilation system. Type I, II, III, IIIA Waste Tank structural integrity (including tank top) is required during normal operations, during an external fire event, during and following a Tornado/High Winds Event, and during and following a Seismic Event. The waste tank structure is considered to be PC-2 high wind qualified by virtue of its underground location. Type I, II, III, IIIA Waste Tanks are designed to withstand design loading, corrosion, external impacts, external fire and flooding (Tanks 9, 10, and 11). Although not a functional requirement, waste tank wall leakage is assumed to be a maximum of 0.4 gallon per minute (gpm) for non-seismic and 4.0 gpm for post-seismic, excluding Tank 50. For Tank 50, leakage from the waste tank wall is assumed to not occur (including post-DBE).

Type I, II, III, IIIA Waste Tanks are credited as an SC control for the following events:

- Waste Tank Annulus Explosion (SS for Tank 50)
- Waste Tank Wall Failure (SS for Tank 50)
- Seismic Event

The waste tank riser covers and riser plugs are an integral component of each Waste Tank and are necessary to fulfill the SS confinement function. These riser covers and riser plugs help form the boundary for airborne/aerosolized waste confinement for some events. The functionality of the riser covers and riser plugs is to remain in place during in-tank activities that have the potential to release airborne/aerosolized waste. For the Waste Tank Explosion event, the waste tank provides an overall gross confinement function and it is recognized that the explosion pressures could dislodge the riser plugs and that unrestrained riser plugs may not remain in place. The internal components of the riser (e.g., core pipes, leak detection) are not required to be SS.

There are many activities that take place in the CSTF that require equipment to be installed through waste tank risers and plugs, in addition to temporary work that requires riser cover and plug removal. Some activities (e.g., liquid/vapor sampling) may have the riser cover/plug removed for the duration of the activity, but these activities are short in duration, typically controlled by procedure or work instruction, and represent a minimal time at risk. Longer duration activities (e.g., camera installed for periodic inspections) with the riser cover/plug

removed, require the installation of temporary covers to ensure the safety function of the waste tank is met. Longer duration activities requiring riser cover/plug removal (without installation of temporary covers) are acceptable, provided Engineering determines that the safety function of the waste tank is not compromised by the openings (e.g., ability of the waste tank to provide airborne confinement for aerosolization [in conjunction with active ventilation]).

Type I, II, III, IIIA Waste Tanks are credited as an SS control, having the same safety function and functional requirements, for the following events:

- Aerosolization Events
- Waste Tank Explosion
- Waste Tank/Pump Tank Overheating
- Tornado/High Winds Event
- Wildland Fire
- Loss of Offsite Power

Chapter 18 contains additional safety-related controls for Waste Tank 48.

4.3.10.2 System Description

Waste Tank Explosion and Annulus Explosion events for Waste Tank 48 are covered by Chapter 18.

Type I, II, III, IIIA Waste Tank SC boundary includes the annulus (see Section 4.4.26), primary tank, risers, penetrations through the annulus and primary wall, and the tank top. The Waste Tanks are surrounded by berms. The berms are required to maintain sufficient composition to retain any liquid waste leaking into the ground as a subsurface release.

Type I, II, III, IIIA Waste Tanks are enclosed by a partial (I, II) or full (III, IIIA) carbon steel secondary containment forming the annulus. The primary tank and secondary containment (annulus) is surrounded by a concrete reinforced vault that provides structural support and radiation shielding.

The primary tank walls are constructed of carbon steel. The carbon steel walls require structural integrity controls to protect against brittle fracture (excluding Type IIIA Tanks), and chemistry control of the tank contents to ensure the tank walls perform their safety function accounting for possible corrosion (excluding Type I/II Chemical Cleaning Waste Tanks). For Type IIIA Tanks 38, 39, 40, 41, 42, 43, 44, 45, 46, 47, 48, 49, 50, and 51, the following discussion precludes the need for credited procedure controls to prevent brittle failure due to low tank wall steel temperature.

The primary tanks of Type IIIA Tanks 38, 39, 40, 41, 42, 43, 44, 45, 46, 47, 48, 49, 50, and 51 are constructed of normalized American Society for Testing and Materials (ASTM) A537, Class I, rolled steel plates. The material specification for these waste tanks requires documented drop weight or Charpy V-Notch testing of the steel plate at –23°C (-10°F). These tests indicate

that ASTM A537, Class I steel in the primary tank wall is not susceptible to brittle failure above -23°C (-10°F). After assembly, the primary tank plates, welds, and attachments were stress relieved to eliminate residual stresses in the primary tank that contribute to brittle failure (Ref. 28, 29).

Using a conservative -40°C Nil-Ductility-Transition Temperature (NDTT) value for ASTM A537, Class I steel, the Type IIIA primary tank steel wall NDTT-based limit of -7°C (+19.4°F) (-40°C plus an industry standard 33°C safety margin [Ref. 30]) was established. This -40°C NDTT value was selected from the higher values of NDTT test results for ASTM A537, Class I steel. The industry accepted NDTT value for this steel is -45°C (Ref. 31).

The 99th percentile minimum daily temperature for the local area is only –7.8°C (+18.0°F) (Ref. 32). The lowest average daily temperature is -11°C (+13°F) (Ref. 32). The average daily temperature is therefore a much more relevant parameter with respect to reducing the tank wall temperature. The significant thermal inertia of the underground steel waste tank (including the contained waste, surrounding concrete, and soil) resists changes in primary wall temperature induced by ambient temperature changes. The thermal inertia of the waste tank, considered with the low frequency and short duration of the minimum daily and average daily ambient temperatures that equal or exceed –7°C, make it highly unlikely that the primary tank wall temperature will exceed the conservatively established NDTT-based limit. Destructive testing that demonstrated no brittle failure of the actual tank wall steel at –23°C and a conservatively established NDTT for ASTM A537, Class I, normalized steel (-40°C) provide reasonable assurance that brittle failure of these tanks is highly unlikely.

The Waste Tank structures require tank top loading controls to protect the tank structure and concrete supports against excessive stresses, flammable vapor controls to protect against an internal tank explosion, and an inspection program to evaluate continued tank integrity.

4.3.10.3 System Evaluation

Functionality is assured through the implementation of the Structural Integrity Program (and associated testing/inspection) and Corrosion Control Program.

The associated section of Table 4.3-2 summarizes the DR evaluation for the Type I, II, III, IIIA Waste Tanks. Type I, II, III, IIIA Waste Tanks meet the DRs for an SC SSC.

4.3.11 TYPE I, II, III, IIIA WASTE TANK HIGH LIQUID LEVEL CONDUCTIVITY PROBES AND ALARMS (EXCLUDING TANK 50)

4.3.11.1 Safety Function and Functional Requirements

The SC function of the Type I, II, III, IIIA Waste Tank High Liquid Level Conductivity Probes (HLLCPs) and Alarms is to provide a control room alarm for a high level condition in Types I, II, III, IIIA Waste Tanks. Waste Tank High Liquid Level Conductivity Probes for Tank 50 and Type IV Waste Tanks are covered in Section 4.4.31. Type I, II, III, IIIA Waste Tank HLLCP alarms are used to initiate operator actions needed to limit the amount of waste in a waste tank. Type I, II, III, IIIA Waste Tank HLLCP and Alarms are required during normal operations.

Type I, II, III, IIIA Waste Tank HLLCPs and Alarms are credited with protecting the initial condition (fill limits) of tank wall integrity (excluding Type I/II Acidic Chemical Cleaning Waste Tanks) for the following events:

- Waste Tank Annulus Explosion
- Waste Tank Wall Failure
- Seismic Event

Type I, II, III, IIIA Waste Tank HLLCPs and Alarms are credited with protecting the initial condition (as part of the Flammability Control Program) of seven days to Lower Flammability Limit (LFL) (excluding Type I/II Acidic Chemical Cleaning Waste Tanks) for the following events:

- Waste Tank Explosion
- Tornado/High Winds Event
- Wildland Fire
- Loss of Offsite Power

Type I, II, III, IIIA Waste Tank HLLCPs and Alarms are credited with preventing an overflow event by limiting fill levels (excluding Type I/II Acidic Chemical Cleaning Waste Tanks) as an initial condition for the Transfer Error/SMP Waste Release.

Type I, II Waste Tank HLLCPs and Alarms on Type I/II Acidic Chemical Cleaning Waste Tanks are credited with protecting the initial condition (fill limits) for flammability/wall leak analysis on the waste tank and annulus for the following events:

- Waste Tank Explosion
- Waste Tank Annulus Explosion
- Waste Tank Wall Failure
- Tornado/High Winds Event
- Seismic Event
- Wildland Fire
- Loss of Offsite Power

Type I, II, III, IIIA Waste Tank HLLCPs and Alarms are credited with protecting the initial condition (fill limits) for tank wall exposed area for Aerosolization Events and Waste Tank/Pump Tank Overheating. For Waste Tanks 1, 2, 3, 4, 7, 8, 9, 10, and 11, the HLLCPs and Alarms are credited with preventing a siphon event by limiting fill levels as an initial condition for the Waste Tank Siphon/Pump-Out.

Type I, II, III, IIIA Waste Tank HLLCPs and Alarms are credited as an SC control for the following events:

- Aerosolization Events
- Waste Tank Explosion
- Waste Tank Annulus Explosion
- Waste Tank Wall Failure
- Tornado/High Winds Event
- Seismic Event
- Wildland Fire
- Loss of Offsite Power

Type I, II, III, IIIA Waste Tank HLLCPs and Alarms are credited as an SS control for the following events:

- Transfer Error/SMP Waste Release
- Waste Tank Explosion
- Waste Tank/Pump Tank Overheating
- Waste Tank Siphon/Pump-Out (Waste Tanks 1, 2, 3, 4, 7, 8, 9, 10, and 11)

Chapter 18 contains additional safety-related controls for Waste Tank 48.

4.3.11.2 System Description

The major SC components comprising Type I, II, III, IIIA Waste Tank HLLCPs and Alarms consist of a stainless steel sensing probe, aircraft cable/wiring, level sensing relay, and control room panel alarm/annunciator (some waste tanks have two control room panel alarms/annunciators associated with the HLLCP). In addition, some systems utilize a fiber optic multiplexer to relay the alarm signal from a local control room to a central control room. Power supplies to the sensing circuit and annunciator, and the functional test switch are not within the SC boundary. See Figure 4.3-2. Additionally, the Type I, II, III, IIIA Waste Tank HLLCP and Alarm circuits may utilize time delay relays (less than or equal to 60 seconds) to avoid relay chatter associated with electronic noise signals. This time delay period, prior to alarm actuation, is judged to have an insignificant impact on initiating operator actions for the event.

All active and passive components that comprise the sensing and instrumentation circuit are considered SC components. These components include but are not limited to the signal cable, grounding pathway, terminal blocks, cable connectors, sensing relays, time delay relays, alarm relays, alarm bistables, annunciators, and fiber optic multiplexers (fiber optic alarm loop). The control room alarm must provide both audible and visual indications of the alarm condition.

4.3.11.3 System Evaluation

Functionality is assured through the implementation of applicable Surveillance Requirements (SRs), as identified in the TSRs.

The associated section of Table 4.3-2 summarizes the DR evaluation for Type I, II, III, IIIA Waste Tank HLLCPs and Alarms. A general assessment of the applicable DRs is provided below. Subsequent to the initial DR evaluation (Ref. 13), additional assessments were performed to evaluate the impact of multiplexing the HLLCP alarm signals and transmitting them via fiber optic cable to a central control room. These assessments (Ref. 40, 42, 46, 47, 48, 49, 50, 51) concluded that using fiber optic cable had a negligible impact on the overall failure probability and the SSCs are deemed acceptable to meet their SC requirements, assuming the requirements of Section 4.3 are met.

DR-6 Single Active Failure Resistance

The design of the conductivity probe, sensing circuit, power supply indication, alarm panel components, and copper wire/fiber optic cable alarm loops is not fully redundant. Based on the reasons/discussions stated below, Type I, II, III, IIIA Waste Tank HLLCPs and Alarms are deemed acceptable to meet their SC requirements:

- HLLCP instrument loops are periodically tested. The likelihood of relay failure or losing power during the period between these surveillances and at the same time having an event that raises the level to above the fill limit is small.
- Liquid levels below the HLLCP setpoint are monitored using non-credited reel tapes, radar, or manual steel measuring tapes. Although not credited in the Accident Analysis, this equipment provides actual indication of waste tank level.

DR-8 Safety Class Electrical Requirements

The sensing circuitry and applicable alarm panels are powered by the normal plant power distribution system that does not meet Institute of Electrical and Electronics Engineers (IEEE) class 1E requirements. Additionally, instrument loop circuits/electrical components were not designed to, nor do they conform to 1E requirements. Based on the reasons/discussions stated below, Type I, II, III, IIIA Waste Tank HLLCPs and Alarms are deemed acceptable to meet their SC requirements:

- The HLLCP periodic tests provide assurance that power is available and that the entire HLLCP instrument loop including the applicable panel alarm, is functioning properly.
- A total loss of power resulting in a loss of lighting, multiple indications, and control room instruments will be obvious to operators such that corrective action may be taken. Only a loss of power or electrical signal to a very selective circuit(s) might go undetected. Therefore, the likelihood of having an undetected high level in a waste tank while conditions were favorable for an accident is not credible. The vulnerability of waste tank HLLCPs to a loss of power is mitigated by the fact that the

HLLCP setting (which is based on the most restrictive of the waste levels used in the various accidents) includes a 15,000 gallon allowance to account for the "maximum missing waste" assumed in the unmitigated analyses (excluding Type I/II Acidic Chemical Cleaning Waste Tanks). For Type I/II Acidic Chemical Cleaning Waste Tanks, waste transfers into the waste tank are prohibited.

- Additional level indication is provided by non-credited reel tapes, radar, or steel measuring tapes.

4.3.12 TYPE I, II, III, IIIA WASTE TANK PURGE VENTILATION SYSTEMS (EXCLUDING TANK 50)

4.3.12.1 Safety Function and Functional Requirements

For Type I/II Acidic Chemical Cleaning Waste Tanks, the SC function of Type I, II Waste Tank Purge Ventilation Systems is to maintain the concentration of flammable vapors in the waste tank bulk vapor space to less than or equal to the Safety Analysis Value (SAV) accounting for radiolytic and corrosion induced hydrogen generation and trapped gas release from 10,000 gallons of sludge.

For the remaining waste tanks, the Type I, II, III, IIIA Waste Tank Purge Ventilation Systems provide the following SC functions:

- Provides sufficient purge flow rate through the tank (Rapid Generation Tanks and Slow Generation Tanks) to maintain the tank bulk vapor space less than or equal to 25% of the LFL (accounting for dissolved hydrogen release from steam jetted transfers [excluding Tanks 40 and 51 when classified as an ESP Sludge Slurry Waste Tank] and radiolytic hydrogen generation). This function will ensure that the tank bulk vapor space is maintained less than or equal to the hydrogen concentration SAV and protect the initial hydrogen concentration to ensure that the minimum time to LFL associated with the waste tank flammability classification is protected.
- Provides sufficient purge flow rate through the tank (Very Slow Generation Tanks during receipt of a steam jetted transfer), accounting for dissolved hydrogen release, to ensure that the minimum time to LFL associated with the waste tank flammability classification is protected.
- During free supernate removal activities on Rapid Generation Tanks and Slow Generation Tanks (in conjunction with the Gas Release Program), maintains the minimum time to LFL defined by the waste tank flammability classification (and associated minimum ventilation flow rate requirements).
- For spontaneous liberation events and other activities (sludge agitation, bulk saltcake dissolution, and saltcake interstitial liquid removal) on Rapid Generation Tanks and Slow Generation Tanks, minimizes the potential for reaching a flammable vapor concentration by providing a continuous purge of the tank vapor space.
- For activities (sludge agitation, bulk saltcake dissolution, and saltcake interstitial liquid removal) that exceed the Gas Release Criteria described in Chapter 3 (see Section 3.4.2.11), provides sufficient purge flow rate through the tank (in conjunction

with the Gas Release Program) to maintain the waste tank bulk vapor space hydrogen concentration less than or equal to the SAV and maintain the minimum time to LFL defined by the waste tank flammability classification.

Ventilation System Flow Indicators are required for Rapid Generation Tanks and Chemical Cleaning Tanks. Additionally, Ventilation System Flow Indicators are required for those tanks undergoing sludge agitation (using waste tank mixing devices), bulk saltcake dissolution, or saltcake interstitial liquid removal activities which exceed the Gas Release Criteria described in Chapter 3 (see Section 3.4.2.11 or Table 3.4-9 for specific applicability requirements). These indicators provide a low flow interlock to stop the gas release activity (see Section 4.3.13). The Ventilation System Flow Indicators are required to provide local indication of waste tank vapor space air flow. The Waste Tank Purge Ventilation System for Tank 50 is covered in Section 4.4.25.

Type I, II, III, IIIA Waste Tank Purge Ventilation Systems are required during normal operations.

Type I, II, III, IIIA Waste Tank Purge Ventilation Systems (with Flow Indicators as required above and identified in Chapter 3) are credited as an SC control for the following event:

- Waste Tank Explosion

The SS function of Type I, II, III, IIIA Waste Tank Purge Ventilation Systems is to provide an active filtered release path for potential radiological releases from the waste tank vapor space. When not operating, the ventilation system integrity (including outlet HEPA filter) provides airborne confinement of radiological material to minimize a radioactive release to the environment. The Type I, II, III, IIIA Waste Tank Purge Ventilation System also provides an active elevated release path (via the exhaust stack) to ensure adequate dispersion of potential chemical vapors from the waste tank vapor space on Type I/II Acidic Chemical Cleaning Waste Tanks and Type I, II, III, IIIA Waste Tanks that are the receipt tank for a Chemical Cleaning Transfer (or vent/drain operation associated with the transfer). Ventilation System Flow Indicators are not required to support this SS function.

Type I, II, III, IIIA Waste Tank Purge Ventilation Systems (Flow Indicators are not required as described above) are credited as an SS control for the following events:

- Aerosolization Events
- Waste Tank/Pump Tank Overheating

4.3.12.2 <u>System Description</u>

The major components comprising Type I, II, III, IIIA Waste Tank Purge Ventilation Systems are listed below and shown in Figure 4.3-3:

- Demister, condenser, steam reheater
- Outlet HEPA filter assemblies

- Exhaust fan/motor
- Exhaust stack
- Manual dampers
- Ventilation ductwork
- Ventilation flow instrumentation

The SC equipment of all Type I, II, III, and IIIA Waste Tanks is similar. Minor differences between the individual systems exist. The following description is typical for most ventilation systems, but some differences exist from tank to tank. Differences in components and flow paths from that described here are acceptable as long as the required safety function is met.

The purge airflow is drawn into the tank through an inlet filter or other tank penetrations (e.g., riser covers/plugs, equipment penetrations) by operation of the ventilation system. Since there are multiple paths for air inflow, the air introduction points to the waste tank are not required to be functionally classified SC. After sweeping the tank vapor space, the air and flammable vapors are removed through the exhaust header. In the exhaust header, the air/vapor mixture passes through a demister, condenser, and steam reheater. From the reheater the mixture passes through an outlet HEPA filter assembly, manual damper, flow element, and through an exhaust blower/fan through the exhaust fan stack to atmosphere (some flow elements are located downstream of the exhaust blower/fan). The support systems for the ventilation system components (e.g., flushwater, Chromate Cooling Water [CRW], steam) and HEPA filter filtration characteristics are not required to support the SC function of the tank ventilation system. In addition, the inlet HEPA filter and ductwork are not required to support the SC function of the ventilation system. The SC function requires the structural integrity of the pressure boundary of the exhaust ventilation system and its components. The structural integrity of the pressure boundary includes internal portions of the system, where necessary, to maintain the flow path boundary of the system (e.g., reheater steam tubes). The stack is SC for structural integrity to prevent a failure (such as crimping) that could cause a loss of tank purge ventilation flow.

The Type I, II, III, IIIA Waste Tank Purge Ventilation Systems shall be maintained at least as a Level 4 duct class (per Reference 57) for normal permissible leakage rates. Per Reference 58, the bounding in-leakage rate associated with Level 4 duct class for all waste tank types is 1 scfm. This potential in-leakage rate is extremely small and the minimum ventilation flow rate requirements from Chapters 3 and 5 are derived using various bounding conditions (e.g., tank level, radiolytic hydrogen generation rate, dissolved hydrogen from steam jetted transfers). Additionally, nominal flow rates from waste tank ventilation systems typically exceed minimum ventilation flow rate requirements by a significant amount. Therefore, no adjustment is necessary to flow rate requirements (determined/provided in the DSA/TSR) to account for the Level 4 duct class permissible leakage rates.

The SS airborne confinement boundary for the ventilation system includes all the ventilation ductwork/pipes from the waste tank up to and including the outlet HEPA filter assemblies. For Type I/II Acidic Chemical Cleaning Waste Tanks and Type I, II, III, IIIA Waste Tanks that are the receipt tank for a Chemical Cleaning Transfer (or vent/drain operations associated with the

transfer), the SS airborne confinement boundary includes all the ventilation ductwork/pipes from the waste tank up to and including the stack discharge (with adequate height as determined by the Industrial Hygiene Program). This also includes any penetrations into the ductwork/pipes, up to the first sound isolation point of the penetration, and instrumentation isolation valves. HEPA filter filtration characteristics are required to support the integrity function. Outlet HEPA filters are required to be 99.5% efficient to mitigate releases from waste tank Aerosolization Events (this efficiency also bounds requirements for mitigating waste tank overheating events). The support systems for the ventilation system components (e.g., flushwater, CRW, steam) are not required to support the SS function of the ventilation system. Failure of these support systems was evaluated and accepted as not compromising the SS function provided Ventilation System Performance Monitoring is completed. The SS function requires fan operation and the structural integrity of the pressure boundary of the ventilation system and its components. The structural integrity of the pressure boundary includes internal portions of the system, where necessary, to maintain the flow path boundary of the system (e.g., reheater steam tubes).

Ventilation System Performance Monitoring is required when HEPA filtration is credited as a control in an active ventilation system for mitigating an event. HEPA filters are susceptible to plugging and possible breakthrough when subjected to high moisture loading, which would render the filter incapable of performing its intended function. Ventilation System Performance Monitoring ensures that the HEPA filter is operating properly, and capable of performing its credited function.

Ventilation System Performance Monitoring checks the ventilation system periodically to ensure that HEPA filter plugging or breakthrough has not occurred. Monitoring is performed prior to beginning an evolution to establish baseline conditions, and periodically thereafter.

4.3.12.3 System Evaluation

Functionality is assured through the implementation of applicable SRs, as identified in the TSRs, and the Structural Integrity Program and associated testing/inspection.

The associated section of Table 4.3-2 summarizes the DR evaluation for the Type I, II, III, IIIA Waste Tank Purge Ventilation Systems. A general assessment of the applicable DRs is provided below.

DR-5 Explosion/Fire Resistance

Type I, II, III, IIIA Waste Tank Purge Ventilation Systems could be lost as a result of an external explosion or fire. An external explosion could damage the ventilation system and smoke/soot from a fire could cause the HEPA filters to clog, stopping ventilation flow to the tank. Based on the reasons/discussions stated below, Type I, II, III, IIIA Waste Tank Purge Ventilation Systems are deemed acceptable to meet their SC requirements:

- The Fire Protection Program provides control of combustible loading throughout the facility.
- The Flammability Control Program provides administrative control of tank contents and operations such that at least seven days would be required following the loss of

the ventilation system before the waste tank would reach 100% of the LFL (excluding Type I/II Acidic Chemical Cleaning Waste Tanks).

- TSRs require that the ventilation system be checked periodically, which will give operations adequate time to detect a failure and restore the equipment to operability, or to install portable blowers to purge the waste tank while the installed system is being repaired.
- Multiple non-credited indicators (e.g., control room alarms and vacuum/pressure/differential pressure [dP] indications) are available to alert the operator to the loss of ventilation and to take corrective action. Based on the multiple indicators of the loss of purge flow, the time required to reach 100% of the LFL, and the availability of portable backup blowers, it is judged that operations would be able to restore adequate ventilation flow to the waste tank before reaching LFL, thereby, preventing an explosion.

DR-6 Single Active Failure Resistance

The primary active components in the Waste Tank Purge Ventilation System are the exhaust fan and motor. Most ventilation systems are not designed with redundant exhaust fans (excluding Tanks 48 and 49). Failure of these components would prevent the ventilation system from providing adequate purge flow through the tank. The ventilation system flow indicator is also susceptible to a single failure event. Based on the preceding reasons/discussions stated above for DR-5 and the discussion below, Type I, II, III, IIIA Waste Tank Purge Ventilation Systems are deemed acceptable to meet their SC requirements:

- Where a flow indicator is required, surveillances are performed for ventilation flow and flammable vapor concentration. The surveillance frequency is adequate to detect a loss of ventilation flow and take corrective actions within three days (for the time to LFL for Type I/II Acidic Chemical Cleaning Waste Tanks) or seven days (excluding Type I/II Acidic Chemical Cleaning Waste Tanks) provided by the Flammability Control Program.

DR-8 Safety Class Electrical Requirements

The Waste Tank Purge Ventilation System electrical components are dependent on the facility Electrical Distribution System for power. The facility power supplies were not designed nor installed to meet IEEE Class 1E requirements. Based on the reasons/discussions stated below, Type I, II, III, IIIA Waste Tank Purge Ventilation Systems are deemed acceptable to meet their SC requirements:

- Loss of power could involve a localized loss of power, such as to an individual substation or motor control center, or could involve complete loss of offsite power. Operating experience at SRS has shown that, historically, complete loss of power events are of short duration. Power is available from other sources (e.g., diesel generators, portable generators). Power is restored well within three days (for the time to LFL for Type I/II Chemical Cleaning Waste Tanks) or seven days (excluding

Type I/II Chemical Cleaning Waste Tanks) provided by the Flammability Control Program.

- The waste tanks are maintained to ensure at least seven days to reach LFL after the loss of ventilation (excluding Type I/II Acidic Chemical Cleaning Waste Tanks). For Type I/II Acidic Chemical Cleaning Waste Tanks the assumed time to LFL is three days. For either case, adequate time exists to restore normal power to the ventilation system, provide power from an alternate source to the installed fan, or to install and operate a portable ventilation system.

DR-11 Internal Hazard Resistance

It is possible that because of an internal event, the purge ventilation to the waste tank vapor space could be lost. Any number of internal events could cause a loss of ventilation. Based on the preceding reasons/discussions stated above in DR-5, Type I, II, III, IIIA Waste Tank Purge Ventilation Systems are deemed acceptable to meet their SC requirements.

4.3.13 WASTE TANK VENTILATION LOW FLOW INTERLOCK

4.3.13.1 Safety Function and Functional Requirements

The Waste Tank Ventilation Low Flow Interlock prevents the waste tank's bulk vapor space from exceeding 60% of the LFL (or the hydrogen concentration SAV as defined by the Flammability Control Program) or becoming flammable following a trapped gas release within the minimum time to LFL as defined by the waste tank flammability classification, during sludge agitation (using waste tank mixing devices), bulk saltcake dissolution, and saltcake interstitial liquid removal activities of Type I, II, III, and IIIA Waste Tanks (see Section 3.4.2.11 or Table 3.4-9 for specific applicability requirements).

Depending on the activity being performed, the Ventilation Low Flow Interlock will perform the following when low ventilation flow or failure of instrument loop control power occurs:

- stop waste tank mixing devices (tanks undergoing sludge agitation or bulk saltcake dissolution using waste tank mixing devices)
- stop transfer pumps associated with waste tank recirculation (tanks undergoing bulk saltcake dissolution using transfer pumps associated with waste tank recirculation)
- close the dissolution liquid addition valves (tanks undergoing bulk saltcake dissolution)
- stop transfer pumps associated with saltcake interstitial liquid removal (tanks undergoing saltcake interstitial liquid removal)

The Waste Tank Ventilation Low Flow Interlock is required for tanks undergoing sludge agitation (using waste tank mixing devices), bulk saltcake dissolution, or saltcake interstitial liquid removal activities which exceed the Gas Release Criteria described in Chapter 3 (see Section 3.4.2.11 or Table 3.4-9 for specific applicability requirements). The Waste Tank

Ventilation Low Flow Interlock is required during normal operations, and during and following a Seismic Event.

The Waste Tank Ventilation Low Flow Interlock for Type I, II, III, and IIIA Waste Tanks is credited as an SC control for the following events:

- Waste Tank Explosion
- Seismic Event

The Waste Tank Ventilation Low Flow Interlock for Type IV Waste Tanks is credited as an SS control, having the same safety function and functional requirements, for the following events:

- Waste Tank Explosion
- Seismic Event

4.3.13.2 System Description

The Waste Tank Ventilation Low Flow Interlock consists of two redundant ventilation low flow instrument loops. Each loop supplies a low flow signal to actuate the interlock function. Upon interlock actuation, the interlock system trips waste tank mixing device electrical breakers, trips transfer pump electrical breakers (associated with waste tank recirculation or saltcake interstitial liquid removal), and closes dissolution liquid addition valves (as applicable). The interlock is also actuated on a loss of interlock instrument loop control power. See Figure 4.3-4. If the interlocks are located within a structure, the structure is required to be PC-3 seismically qualified. Additionally, the Waste Tank Ventilation Low Flow Interlock circuits may utilize time delay relays (less than or equal to 15 seconds) to avoid relay chatter associated with electronic noise signals. This time delay period, prior to interlock actuation, is judged to have an insignificant impact on the waste tank's bulk vapor space flammable vapor concentration given the long time to LFL and the multiple requirements involved with the control set for a Waste Tank Explosion (e.g., Gas Release Program, Hydrogen Monitoring and High Hydrogen Concentration Interlock).

All active and passive components that comprise the sensing, instrumentation, and control circuit are considered SC (SS for Type IV Tanks) components. These components include but are not limited to the instrumentation tubing, instrument isolation valves, signal cable, grounding pathway, terminal blocks, cable connectors, sensing relays, and time delay relays.

4.3.13.3 System Evaluation

Functionality is assured through the implementation of applicable SRs, as identified in the TSRs, and the Structural Integrity Program and associated testing/inspection.

The associated section of Table 4.3-2 summarizes the DR evaluation for the Waste Tank Ventilation Low Flow Interlock. The Waste Tank Ventilation Low Flow Interlock for Type I, II, III/IIIA Waste Tanks are designed, procured, installed, tested, and maintained as SC equipment and meet the DRs for an SC SSC. The Waste Tank Ventilation Low Flow Interlock for Type IV

Waste Tanks are designed, procured, installed, tested, and maintained as SS equipment and meet the DRs for an SS SSC.

4.3.14 DELETED

4.3.15 WASTE TANK TRANSFER JETS (INCLUDING STEAM SUPPLY PIPING)

4.3.15.1 Safety Function and Functional Requirements

The Waste Tank Transfer Jets (Figure 4.3-6) (including steam supply piping inside the waste tanks) for Type I, II, III, IIIA, and IV Waste Tanks provide passive containment of the motive steam/air to prevent radioactive material aerosolization from steam/air impingement at the liquid surface and its subsequent release from the waste tank. The Waste Tank Transfer Jets (including steam supply piping inside the waste tank) are constructed of corrosion resistant material. The Waste Tank Transfer Jets (including steam supply piping inside the waste tanks) boundary integrity is required during normal operations, and during and following a Seismic Event to prevent releasing steam/air into the waste material contained in the tank. Steam/air leakage is permitted at the steam supply line connectors for the waste tank transfer jets and at the packing boxes for telescoping transfer jets, provided the steam/air is not impinging on liquid waste contained in the waste tank.

Waste Tank Transfer Jets for Type I, II, III, IIIA, and IV are credited as an SC control for the following events:

- Aerosolization Events
- Seismic Event

The SS function of Waste Tank Transfer Jets (including steam supply piping inside the waste tanks) for Type I, II, III, IIIA, and IV Waste Tanks is to provide passive containment of the motive steam to prevent overheating of the waste and its subsequent release of radioactive material from the waste tank. Steam leakage is permitted at the steam supply line connectors for the waste tank transfer jets and at the packing boxes for telescoping transfer jets, provided the steam is not causing significant heating of the liquid waste contained in the waste tank. A leak that would cause significant heating of the liquid waste, would also affect the transfer jet operation and flowrate. Therefore, based on engineering judgment, minor steam leaks that still allow the transfer jet to operate do not contribute to significant heating of the liquid waste.

Waste Tank Transfer Jets for Type I, II, III, IIIA, and IV (including steam supply piping inside the waste tanks) are credited as an SS control for the following event:

- Waste Tank/Pump Tank Overheating

4.3.15.2 System Description

The Waste Tank Transfer Jets (including steam supply piping inside the waste tank) are constructed of stainless steel. The stainless steel steam supply line from the steam supply connection inside the tank up to and including the jet assembly are SC.

4.3.15.3 System Evaluation

Functionality is assured through the implementation of the Structural Integrity Program and associated testing/inspection.

The associated section of Table 4.3-2 summarizes the DR evaluation for the Waste Tank Transfer Jets (including steam piping inside the waste tank). Waste Tank Transfer Jets (including steam piping inside the waste tank) meet the DRs for an SC SSC.

4.3.16 242-16H AND 242-25H EVAPORATOR CELLS

4.3.16.1 Safety Function and Functional Requirements

The 242-16H and 242-25H Evaporator Cells provide protection to the evaporator pots thereby preventing the release of radioactive material from the evaporator pots. Each Evaporator Cell provides protection to the evaporator pot and associated equipment from tornado driven missiles and high winds. The Evaporator Cell structural integrity is also required to mitigate the release following a tornado/high winds initiated explosion in the evaporator or evaporator cell. The 242-16H and 242-25H Evaporator Cells structural integrity is required during normal operations, during an external fire event, and during a Tornado/High Winds Event.

The 242-16H and 242-25H Evaporator Cells are credited as an SC control for the following event:

- Tornado/High Winds Event

In addition to having the same safety function and functional requirements as it does for SC, the SS function of the Evaporator Cells is to provide an airborne waste confinement function following a release in the Evaporator Cell. The Evaporator Cells also provide passive containment to minimize the potential for a release of radioactive material to the environment.

The Evaporator Cell covers and plugs are an integral component of each Evaporator Cell and are necessary to fulfill the SS confinement function. These cell covers and plugs help form the boundary for airborne/aerosolized waste confinement for some events. The functionality of the cell covers and plugs is to remain in place during Evaporator Cell activities that have the potential to release airborne/aerosolized waste. For the Evaporator Cell Explosion event, the Evaporator Cell provides an overall gross confinement function and it is recognized that the explosion pressures could dislodge the cell plugs and that unrestrained cell plugs may not remain in place.

There are many activities that take place in the CSTF that require equipment to be installed through Evaporator Cell plugs, in addition to temporary work that requires cell plug removal. Some activities (e.g., liquid/vapor sampling) may have the cell plug(s) removed for the duration of the activity, but these activities are short in duration, typically controlled by procedure or work instruction, and represent a minimal time at risk. Longer duration activities (e.g., camera installed for periodic level monitoring) with the cell plug(s) removed, require the installation of temporary covers to ensure the safety function of the Evaporator Cell is met. Longer duration

activities requiring cell plug removal (without installation of temporary covers) are acceptable, provided Engineering determines that the safety function of the Evaporator Cell is not compromised by the openings (e.g., ability of the Evaporator Cell to provide airborne confinement).

The 242-16H and 242-25H Evaporator Cells are credited as an SS control for the following events:

- Evaporator Cell Explosion (242-16H only)
- Evaporator Overflow, Leaks, and Spills (242-16H only)
- Transfer Line and Transfer Line Jacket/Encasement Explosions
- Wildland Fire

4.3.16.2 System Description

Evaporator cells house the evaporator pot and its internal components, and associated jumpers and service piping (e.g., hard piped water, air, steam). The interior of each cell is lined with stainless steel. Concrete cell covers seal the top of the cell during normal operations. See Figure 4.3-5.

4.3.16.3 System Evaluation

Functionality is assured through the implementation of the Structural Integrity Program and associated testing/inspection.

The associated section of Table 4.3-2 summarizes the DR evaluation for the 242-16H and 242-25H Evaporator Cells. The 242-16H and 242-25H Evaporator Cells meet the DRs for an SC SSC.

4.3.17 WASTE TANK CHROMATE WATER COIL SIPHON BREAKERS

4.3.17.1 Safety Function and Functional Requirements

The Waste Tank CRW Coil Siphon Breakers prevent a release of radioactive material to the environment by preventing siphon or pump-out conditions in Waste Tanks 13, 14 (when connected to the CRW System), 15 (when connected to the CRW System), 29, 30, 31, 32, 33, 34, and 35. Waste Tank CRW Coil Siphon Breakers are required during normal operations and following a Seismic Event.

Waste Tank CRW Coil Siphon Breakers for Tanks 13, 14 (when connected to the CRW System), 15 (when connected to the CRW System), 29, 30, 31, 32, and 35 are credited as an SC control for the following events:

- Waste Tank Siphon/Pump-Out
- Seismic Event

Waste Tank CRW Coil Siphon Breakers for Tanks 33 and 34 are credited as an SS Control for the following events:

- Waste Tank Siphon/Pump-Out
- Seismic Event

4.3.17.2 System Description

There are four CRW Coil Siphon Breakers installed in the CRW system for Waste Tanks 13, 14, and 15. Two siphon breakers are installed on the CRW supply header and two are installed on the return header. The three tanks share the common supply and return header siphon breakers. Two siphon breakers in each header are required for the SC control. However, CRW supply and return to the cooling coils for Tank 14 or Tank 15 are not permanently connected and are blanked or physically disconnected when not in use, eliminating any siphon/pump-out potential. The CRW system is connected when operational plans require cooling for Tank 14 or Tank 15.

There are four CRW Coil Siphon Breakers installed in the CRW system at Waste Tank 30. Two siphon breakers are installed on the CRW supply header and two are installed on the return header. Two siphon breakers in each header are required for the SC control. Having the siphon breakers installed in the Tank 30 CRW supply and return headers allows them to be used as siphon preventers (eliminating both onsite and offsite consequences) for the CRW coils in Waste Tanks 29, 30, 31, and 32. See Figure 4.3-8.

There are four CRW Coil Siphon Breakers installed in the CRW system at Waste Tank 35. Two siphon breakers are installed on the CRW supply header and two are installed on the return header. Two siphon breakers in each header are required for the SC control.

There are four CRW Coil Siphon Breakers installed in the CRW system for Waste Tank 33 and 34. Two siphon breakers are installed on the CRW supply header and two are installed on the return header. The two tanks share the common supply and return header siphon breakers. One siphon breaker in each header is required for the SS control.

The Functional Classification (FC) boundary of each credited siphon breaker is the vacuum/vent valve (see Figure 4.3-7). The debris screen, insulation, heat tracing, drain piping, and piping supports are classified as production support (PS).

4.3.17.3 System Evaluation

Functionality is assured through the implementation of applicable SRs, as identified in the TSRs. Implementation of the Severe Weather Response Program during freezing conditions shall ensure meeting the SC/SS requirements.

The associated section of Table 4.3-2 summarizes the DR evaluation for the CRW Coil Siphon Breakers for Waste Tanks 13, 14, 15, 29, 30, 31, 32, and 35. A general assessment of the applicable DRs is provided below (Ref. 41). The CRW Coil Siphon Breakers for Waste Tanks 33 and 34 are SS and have been designed to meet their requirements during normal conditions.

DR-7 Equipment Environmental Considerations

Waste Tank CRW Coil Siphon Breakers are susceptible to freezing in severe low temperatures. Therefore, the Severe Weather Response Program is required to ensure the appropriate compensatory measures are in place to ensure the siphon breakers perform their safety function or that the siphon breakers are declared inoperable during the low temperature conditions.

4.3.18 242-16H EVAPORATOR FEED PUMP BACKFLOW PREVENTION DEVICES

4.3.18.1 Safety Function and Functional Requirements

The 242-16H Evaporator Feed Pump Backflow Prevention Devices provide containment of liquid waste to mitigate an above-ground radioactive material release or spill via the Flush Water System. Backflow Prevention Device boundary integrity is required during normal operations, and during and following a Seismic Event.

The 242-16H Evaporator Feed Pump Backflow Prevention Devices are credited as an SC control for the following event:

- Seismic Event

The 242-16H Evaporator Feed Pump Backflow Prevention Devices are credited as an SS control for the following event:

- Transfer Error/SMP Waste Release

4.3.18.2 System Description

The 242-16H Evaporator Feed Pump Backflow Prevention Devices are redundant check valves installed in the flush water line used to prime the evaporator feed pump. In the event that Flush Water System pressure is lost while priming the evaporator feed pump, the potential exists for waste to be pushed back through the Flush Water System and released above-ground. The 242-16H Evaporator Feed Pump Backflow Prevention Devices minimize the potential flowpath of waste from the evaporator feed pump to the Flush Water System. Each backflow prevention device must have an internal leak rate of less than or equal to 1 gpm. The flush water line from the tank top riser up to and including the spool piece, including both backflow prevention devices, is SC (seismic) (Refer to Figure 4.3-9).

4.3.18.3 System Evaluation

Functionality is assured through the implementation of applicable SRs, as identified in the TSRs. Implementation of the Severe Weather Response Program during freezing conditions shall ensure meeting the SC requirements.

The associated section of Table 4.3-2 summarizes the DR evaluation for the 242-16H Evaporator Feed Pump Backflow Prevention Devices. The 242-16H Evaporator Feed Pump Backflow Prevention Devices are designed, procured, installed, tested, and maintained as SC equipment and meet the DRs for an SC SSC.

4.3.19 TYPE I, II, III, IIIA WASTE TANK ANNULUS TRANSFER JETS (INCLUDING STEAM SUPPLY PIPING)

4.3.19.1 Safety Function and Functional Requirements

Type I, II, III, IIIA Waste Tank Annulus Transfer Jets (including steam supply piping inside the annulus) provide passive containment of the motive steam/air to prevent radioactive material aerosolization from steam/air impingement at the liquid surface and its subsequent release from the annulus. Type I, II, III, IIIA Waste Tank Annulus Transfer Jets (including steam supply piping inside the annulus) are constructed of corrosion resistant material. Type I, II, III, IIIA Waste Tank Annulus Transfer Jets (including steam supply piping inside the annulus) boundary integrity is required during normal operations and during and following a Seismic Event to prevent releasing steam/air into the waste material contained in the annulus. Steam/air leakage is permitted at the steam supply line connectors for the annulus transfer jets, provided the steam/air is not impinging on liquid waste contained in the annulus.

Type I, II, III, IIIA Waste Tank Annulus Transfer Jets (including steam supply piping inside the annulus) are credited as an SC control for the following events:

- Aerosolization Events
- Seismic Event

The SS function of Type I, II, III, IIIA Waste Tank Annulus Transfer Jets (including steam supply piping inside the annulus) is to provide passive containment of the motive steam to prevent overheating of the waste and its subsequent release of radioactive material from the annulus. Steam leakage is permitted at the steam supply line connectors for the annulus transfer jets, provided the steam is not causing significant heating of the liquid waste contained in the annulus. A leak that would cause significant heating of the liquid waste, would also affect the transfer jet operation and flowrate. Therefore, based on engineering judgment, minor steam leaks that still allow the transfer jet to operate do not contribute to significant heating of the liquid waste.

Type I, II, III, IIIA Waste Tank Annulus Transfer Jets (including steam supply piping inside the annulus) are credited as an SS control for the following event:

- Waste Tank/Pump Tank Overheating

4.3.19.2 System Description

Type I, II, III, IIIA Waste Tank Annulus Transfer Jets (including steam supply piping inside the annulus) are constructed of stainless steel. The FC boundary of the transfer jet includes the stainless steel steam supply line from the steam supply connection inside the tank up to and including the jet assembly.

4.3.19.3 System Evaluation

Functionality is assured through the implementation of the Structural Integrity Program and associated testing/inspection.

The associated section of Table 4.3-2 summarizes the DR evaluation for the Type I, II, III, IIIA Waste Tank Annulus Transfer Jets (including steam supply piping inside the annulus). Type I, II, III, IIIA Waste Tank Annulus Transfer Jets (including steam supply piping inside the annulus) meet the DRs for an SC SSC.

4.4 SAFETY SIGNIFICANT STRUCTURES, SYSTEMS, AND COMPONENTS

SS SSCs are those SSCs whose preventive or mitigative function is a major contributor to Defense-in-Depth and/or worker safety. Generally, SS SSC designations based on worker safety are limited to those SSCs whose failure:

- Is estimated to result in acute worker fatality or serious injuries to workers
- Would result in a release that would exceed the Onsite EGs at 100 meters

More specific SS criteria are given in Reference 3. The SSCs listed in Table 4.4-1 are designated as SS. The table identifies the Chapter 3 accident(s) or rationale upon which the SS designation is based and summarizes the safety function(s), functional requirement(s), and TSR coverage (LCO or Design Feature). Further details regarding the SSCs from Table 4.4-1 are provided below.

In addition to the SSCs classified as SS, several Administrative Controls provide SS functions. These Administrative Controls are specified and discussed further in Chapter 5.

SS SSCs which are housed in the control rooms are considered to meet the DR if they can be shown to perform their safety function assuming both the control room building (including associated MCCs) remains intact and the SSC is accessible (see Reference 38 for an example of such a case).

In the following sections, the System Description subsection provides a description of the SS SSC and the basic principles by which it performs its safety function, including simplified drawings where appropriate.

In F-Area, components for High-Rem transfers are not required to be SS since all transfers in F-Area are considered Low-Rem transfers (Ref. 10).

As discussed in Chapters 3 and 5, SSCs associated with a particular process area under certain conditions (e.g., Modes defined by Chapter 5) may not be credited with performing an SS function (e.g., Waste Tank Purge Ventilation is not credited as an SS function for Closure Waste Tanks). Since a process area could change Modes, this chapter does not define applicability of an SS function related to the Mode.

Table 4.4-2 provides a Design Criteria Assessment Matrix for each of the SS SSCs; comparing the SS SSC against the five DRs that the SS SSC must meet (Table 4.2-2) to perform its functional requirement(s). In the following sections, the System Evaluation subsection identifies only those DRs not satisfied by the SS SSC and discusses the compensatory/corrective action(s) applied/needed for the SSC to meet the DR.

Because of the age of the facilities, the SS QA DRs (identified in DR-3) for many SSCs are not met. When the SSCs were designed, procured, and installed, the QA requirements of the time were used to ensure the SSC met the operational function required. Based on the following actions, the current SS QA requirements for the SSCs are deemed to have been satisfied:

- The SSCs were tested at initial installation and have a history of satisfactory performance.
- The SSCs are maintained and tested to current SS QA requirements.
- The SSCs are inspected and tested periodically as part of the Structural Integrity Program, TSRs, maintenance programs, and other facility programs as appropriate.
- The SRS process piping systems were designed, fabricated, tested and inspected in accordance with B31.1 and B31.3 piping codes (or equivalent) at the time of construction. A data letter (Ref. 9) that describes the code of record for SRS process piping systems supports the CSTF position for complying with the requirements of current codes for process system SSCs.

The F-Area Tank Farm and H-Area Tank Farm Control Room Consolidation Projects relocate or relocated alarms into the 241-2H Control Room. These projects have utilized previously installed fiber optic cable, install new fiber optic cable, or plan new installation of optical fibers through cable routing and support systems which do not meet some of the DRs for SSCs stated in Table 4.4-2. The fiber optic cable design and multiplexing the alarm signals using a safety certified PLC has a negligible impact on the overall failure probability and is considered compliant with the DRs if the following requirements are met (Ref. 39, 40, 52):

- Alarm signals using optical fibers are not credited to perform safety functions during or after NPH events
- Non-SS signals shall not be transmitted over the same optical fiber as SS signals
- Transmitted alarm signals must be of a fail-safe design (i.e., alarm occurs on circuit interruption)
- Alarm instrument loops using fiber optic transmission are periodically tested

4.4.1 TRANSFER PUMP ELECTRICAL BREAKERS/DISCONNECTS

4.4.1.1 Safety Function and Functional Requirements

Transfer Pump Electrical Breakers/Disconnects mitigate a radiological material release to the environment by providing a means for manual shutdown of the transfer pumps and evaporator feed pump by an operator. The Transfer Pump Electrical Breakers/Disconnects are capable of shutting down the transfer pump or evaporator feed pump during normal operations and following a Seismic Event (Ref. 38). For diaphragm pump applications, manual shut down may be accomplished by securing the air compressor unit, if so configured. The coast-down of the pump due to the bleed-down of the air receiver is not considered significant enough to affect the ability of the SSC to satisfy its safety function. Transfer Pump Electrical Breakers/Disconnects

may also include non-waste system transfer pumps (e.g., Inhibited Water [IW], flush water) if used as the method for stopping non-waste additions.

Transfer Pump Electrical Breakers/Disconnects are credited as an SS control for the following events:

- Transfer Facility Explosions
- Pump Pit and Pump Tank Explosion
- Transfer Error/SMP Waste Release
- Seismic Event

4.4.1.2 System Description

The transfer pumps and evaporator feed pumps have various electrical components that can be used to manually interrupt electrical power to the motor. Dependent on the pump involved, the electrical supply breaker to the motor or compressor motor (when used in diaphragm pump applications), the gas release interlock handswitch, or the motor disconnect device is used as the SS device to interrupt electrical power to stop the pump.

4.4.1.3 System Evaluation

Functionality is assured through the implementation of the NMMP and associated testing/inspection.

The associated section of Table 4.4-2 summarizes the DR evaluation for the Transfer Pump Electrical Breakers/Disconnects. Transfer Pump Electrical Breakers/Disconnects meet the DRs for an SS SSC.

4.4.2 WASTE TANK (INCLUDING ANNULUS) TRANSFER JET STEAM/AIR ISOLATION VALVES

4.4.2.1 Safety Function and Functional Requirements

Waste Tank (including Annulus) Transfer Jet Steam/Air Isolation Valves mitigate a radiological material release to the environment by providing for a manual shutoff of the transfer jet steam/air supply by an operator. The Waste Tank (including Annulus) Transfer Jet Steam/Air Isolation Valves are capable of isolating steam/air to the transfer jets during normal operations and following a Seismic Event.

Waste Tank (including Annulus) Transfer Jet Steam/Air Isolation Valves are credited as an SS control for the following events:

- Transfer Facility Explosions (Waste Tank)
- Pump Pit and Pump Tank Explosion (Waste Tank)
- Transfer Error/SMP Waste Release (Waste Tank and Annulus)

- Seismic Event (Waste Tank and Annulus)

4.4.2.2 System Description

The waste tank (including annulus) transfer jet gang valves have manual isolation valves in the steam supply and air supply systems located upstream of the gang valves and manual isolation valves located in the jet line downstream of the gang valves. Dependent on the gang valve isolation valve configuration, either the upstream or downstream isolation valve(s) is used to isolate steam and air to the transfer jet. Selection of the isolation valves is based on operator accessibility and operation during accident and post-seismic event conditions.

4.4.2.3 System Evaluation

Functionality is assured through the implementation of the NMMP and associated testing/inspection or operational check prior to use.

The associated section of Table 4.4-2 summarizes the DR evaluation for the Waste Tank (including Annulus) Transfer Jet Steam/Air Isolation Valves. Waste Tank (including Annulus) Transfer Jet Steam/Air Isolation Valves meet the DRs for an SS SSC.

4.4.3 TRANSFER LINE JACKETS/ENCASEMENTS

4.4.3.1 Safety Function and Functional Requirements

The Transfer Line Jackets/Encasements provide passive containment (confinement for encasements) of liquid waste to minimize the radioactive hazardous material releases to the environment and to channel core pipe leakage to a leak detection location. The transfer line jacket also provides airborne waste confinement following a transfer line core pipe waste release. The Transfer Line Jacket/Encasement integrity is required during normal operations (jackets/encasements), and during and following a Seismic Event (encasements that drain to the H-Area Catch Tank). See Section 4.4.12 for secondary containments associated with transfer line jackets. Other transfer line jacket configurations (e.g., flexible hose-in-hose transfer line) may be used as a transfer line jacket. If the Transfer Line Encasement structure that drains to the H-Area Catch Tank survives during a Tornado/High Winds Event, the Transfer Line Encasement structure provides mitigation for an explosion through passive confinement. The Transfer Line Encasement structure is not required to withstand high winds (i.e., the structure is not required to be PC-2 high wind qualified) since loss of confinement prior to the event would prevent the event (i.e., the flammable vapors would not accumulate). The Transfer Line Jackets/Encasements are designed or protected from corrosion, over pressurization, and external impacts to maintain passive containment. See Section 4.4.33 for additional requirements associated with the H-Area Catch Tank Encasement.

Transfer Line Jackets/Encasements are credited as an SS control for the following events:

- Transfer Line and Transfer Line Jacket/Encasement Explosions
- Transfer Facility Explosions (jackets along leak path to the LDB Drain Cell only; encasements that drain to the H-Area Catch Tank only)

- Transfer Error/SMP Waste Release
- Tornado/High Winds Event (encasements that drain to the H-Area Catch Tank only)
- Seismic Event (encasements that drain to the H-Area Catch Tank only)

For the purpose of some Chapter 3 events, the Transfer Line Jacket includes all secondary containments (i.e., LDBs, Modified Leak Detection Boxes [MLDBs], Leak Probe Sleeves [LPSs], and Clean Out Ports [COPs]) connected to the jacket. These secondary containments are described in Section 4.4.12.

4.4.3.2 System Description

The HTF Transfer Line Encasement for Type I transfer lines is a covered reinforced concrete encasement located below ground. Leakage from the core pipe into the encasement and in-leakage of groundwater into the encasement gravity drain to the H-Area Catch Tank.

The Transfer Line Jacket for Type II and IIA transfer lines is carbon steel piping. Pipe joints are typically welded and most are encased in insulation. The portion of the carbon steel pipe in contact with the soil is protected against corrosion with polyethylene film wrap or bituminous coating.

The Transfer Line Jacket for Type III transfer lines is a cement-asbestos secondary containment, with rubber seals sealing the joints between the sections of cement-asbestos. The Transfer Line Jacket for Type IV transfer lines is stainless steel.

Transfer line jackets not fitting one of these types (e.g., flexible hose) may be used.

4.4.3.3 System Evaluation

Functionality is assured through the implementation of the Structural Integrity Program and associated testing/inspection. Transfer Line Jackets/Encasements are periodically tested under the Structural Integrity Program to ensure proper integrity of these passive features. However, some segments of jackets/encasements are configured such that an integrity test is not physically possible. In these situations, the Structural Integrity Program will require a specific engineering evaluation (at the same frequency as integrity tests are required for those segments which are testable) to provide adequate justification for using these untestable jacket/encasement segments.

The associated section of Table 4.4-2 summarizes the DR evaluation for the Transfer Line Jackets/Encasements. Transfer Line Jackets/Encasements meet the DRs for an SS SSC.

4.4.4 DIVERSION BOX (INCLUDING THE HIGH POINT FLUSH PIT) CONDUCTIVITY PROBES AND HIGH LEVEL ALARMS

4.4.4.1 Safety Function and Functional Requirements

DB Conductivity Probes and High Level Alarms provide a control room alarm, upon detection of liquid waste level greater than the initial waste volumes given in Chapter 3, to minimize the potential for a release of radioactive material to the environment (includes High Point Flush Pit);

and ensure the amount of waste in the box does not produce a flammable vapor concentration (excludes High Point Flush Pit). The DB (including the High Point Flush Pit) High Level Alarms are used to initiate operator actions to limit the amount of waste in the DB to less than the initial waste volumes given in Chapter 3.

DBs that have an overflow capacity of less than 15,000 gallons of liquid waste (including the High Point Flush Pit) and those DBs that are in the transfer path for High-Rem or ESP Sludge Slurry (HDB-7 only) transfers require sump conductivity probes with high level alarm. The DB (including the High Point Flush Pit) Conductivity Probe and High Level Alarm is required during normal operations.

DB (including the High Point Flush Pit) Conductivity Probes and High Level Alarms are credited as an SS control for the following events:

- Transfer Facility Explosions
- Transfer Error/SMP Waste Release

4.4.4.2 System Description

The major components comprising the DB (and High Point Flush Pit) Conductivity Probes and Alarms consist of a stainless steel sensing probe, aircraft cable/wiring, level sensing relay, and control room panel alarm/annunciator. In addition, some systems utilize a safety certified PLC to relay the alarm signal from a local control room to a central control room (Figure 4.4-20). Power supplies to the sensing circuit and annunciator, and the functional test switch are not within the SS boundary. See Figure 4.3-2. Additionally, the DB (and High Point Flush Pit) Conductivity Probe and High Level Alarm circuits may utilize time delay relays (less than or equal to 60 seconds) to avoid relay chatter associated with electronic noise signals. This time delay period, prior to alarm actuation, is judged to have an insignificant impact on initiating operator actions for the event.

All active and passive components that comprise the sensing and instrumentation circuit are considered SS components. These components include but are not limited to the signal cable, grounding pathway, terminal blocks, cable connectors, sensing relays, time delay relays, alarm relays, alarm bistables, annunciators, and safety PLCs (fiber optic alarm loop). The control room alarm must provide both audible and visual indications of the alarm condition.

4.4.4.3 System Evaluation

Functionality is assured through the implementation of applicable SRs, as identified in the TSRs.

The associated section of Table 4.4-2 summarizes the DR evaluation for the DB (and High Point Flush Pit) Conductivity Probes and High Level Alarms. A general assessment of the applicable DRs is provided below. Subsequent to the initial DR evaluation (Ref. 15), additional assessments were performed to evaluate the impact of multiplexing the alarm signal to a central control room using a safety certified PLC. These assessments (Ref. 39, 40, 52) concluded that multiplexing the alarm signal using a safety certified PLC had a negligible impact on the overall

system failure probability and the SSCs are deemed acceptable to meet their SS requirements, assuming the requirements of Section 4.4 are met.

DR-3 Functionality

DB (and High Point Flush Pit) Conductivity Probes and High Level Alarms have demonstrated a high degree of reliability to perform their credited function. However, there are vulnerabilities in the system, such as failure during a loss of power, loss of input signal or failure of the level sensing relay/circuit. Based on the reasons/discussions stated below, DB (and High Point Flush Pit) Conductivity Probes and High Level Alarms are deemed acceptable to meet their SS requirements:

- The instrument loop periodic testing provides assurance that power is available and that the entire loop including the applicable panel alarm, is functioning properly when the tests are accomplished. The likelihood of relay failure or losing power during the period between these surveillances and at the same time having an event that leaks waste into a DB is highly unlikely.
- A total loss of power resulting in a loss of lighting, multiple indications, and control room instruments will be obvious to operators such that corrective action may be taken. Only a loss of power or electrical signal to a very selective circuit(s) might go undetected.
- In cases where a DB contains an accumulation of liquid waste (not actually contacting the probe) or high humidity, the level sensing relays have demonstrated contact chatter and early failure. With the exception of this vulnerability, these instruments have demonstrated a high degree of reliability to perform its credited function. This vulnerability is judged acceptable because requirements specify that conductivity probe instrument loops be periodically tested. This test demonstrates the operability of all active and passive components of the instrument with the exception of a limited portion of the common return path encompassing the box grounding scheme. Additionally it verifies that power to the applicable monitored alarm panel and sensing circuits is available.

4.4.5 DIVERSION BOX VENTILATION SYSTEMS (H-AREA DIVERSION BOXES 6 AND 7)

4.4.5.1 Safety Function and Functional Requirements

The HDB-6 and HDB-7 Ventilation Systems control the concentration of flammable vapors to less than or equal to 25% of the LFL conditions in the DB by maintaining a minimum, continuous purge flow. These DB Ventilation Systems provide a filtered release path to minimize the potential for a release of radiological material to the environment. The DB Ventilation System pressure boundary integrity provides passive confinement capabilities, up to the outlet HEPA filter, to ensure that radiological material leakage is minimized. DB ventilation for FDB-2, FDB-4, and HDB-2 is provided by their associated PP/Pump Tank Ventilation Systems, as discussed in Section 4.4.9.

The HDB-6 and HDB-7 Ventilation Systems are required during normal operations. Active flow from installed blower/fan is not required post-seismic.

The HDB-6 and HDB-7 Ventilation System are credited as an SS control for the following events:

- Transfer Facility Explosions
- Aerosolization Events

4.4.5.2 System Description

The major SS components typically comprising the HDB-6 and HDB-7 Ventilation Systems are listed below and shown in Figure 4.4-1:

- Outlet HEPA filter assemblies
- Exhaust fan/motor
- Exhaust stack
- Manual dampers
- Ventilation ductwork
- Ventilation flow instrumentation

The purge airflow is drawn into HDB-6 and HDB-7 through cell penetrations (e.g., cell covers/plugs, equipment penetrations) by operation of the HDB-6 and HDB-7 Ventilation Systems. After sweeping the DB vapor space, the air and flammable vapors are removed through the exhaust header. In the exhaust header, the air/vapor mixture passes through an outlet HEPA filter assembly, manual damper, flow element, and through an exhaust blower/fan through the exhaust fan stack to atmosphere. HEPA filter filtration characteristics are required to support the integrity function. Outlet HEPA filters are required to be 99.5% efficient to mitigate releases from DB Aerosolization Events. The SS function requires the structural integrity of the pressure boundary of the exhaust ventilation system and its components. The stack is SS for structural integrity to prevent a failure (such as crimping) that could cause a loss of ventilation flow.

The HDB-6 and HDB-7 Ventilation Systems shall be maintained at least as a Level 4 duct class (per Reference 57) for normal permissible leakage rates. Per Reference 58, the bounding in-leakage rate associated with Level 4 duct class for all transfer facilities is 1 scfm. This potential in-leakage rate is extremely small and the minimum ventilation flow rate requirements from Chapters 3 and 5 are derived using various bounding conditions (e.g., radiolytic hydrogen generation rate, dissolved hydrogen from steam jetted transfers). Additionally, nominal flow rates from transfer facility ventilation systems typically exceed minimum ventilation flow rate requirements by a significant amount. Therefore, no adjustment is necessary to flow rate requirements (determined/provided in the DSA/TSR) to account for the Level 4 duct class permissible leakage rates.

Ventilation System Performance Monitoring is required when HEPA filtration is credited as a control in an active ventilation system for mitigating an event. HEPA filters are susceptible to

plugging and possible breakthrough when subjected to high moisture loading, which would render the filter incapable of performing its intended function. Ventilation System Performance Monitoring ensures that the HEPA filter is operating properly, and capable of performing its credited function.

Ventilation System Performance Monitoring checks the ventilation system periodically to ensure that HEPA filter plugging or breakthrough has not occurred. Monitoring is performed prior to beginning an evolution to establish baseline conditions, and periodically thereafter.

4.4.5.3 System Evaluation

Functionality is assured through the implementation of applicable SRs, as identified in the TSRs, and the Structural Integrity Program and associated testing/inspection.

The associated section of Table 4.4-2 summarizes the DR evaluation for the DB Ventilation Systems (HDB-6 and HDB-7). A general assessment of the applicable DRs is provided below.

DR-3 Functionality

HDB-6 and HDB-7 Ventilation Systems are susceptible to failure as a result of the loss of power or component failure. Based on the reasons/discussions stated below, HDB-6 and HDB-7 Ventilation Systems are deemed acceptable to meet their SS requirements:

- On loss of electrical power to the ventilation systems, there will be sufficient time to restore the power prior to a flammable mixture developing in HDB-6 and HDB-7 that would reach 100% of the LFL, assuming that the transfer through the facility is terminated on a loss of ventilation.
- HDB-6 and HDB-7 normally contain little or no liquid. Barometric breathing alone will prevent exceeding 25% of the LFL for liquid volumes as great as 1.29% of the structure volume (0.39% for HDB-7 when the liquid is ESP Sludge Slurry).
- HDB-6 and HDB-7 are equipped with a leak detection system, an indication of a leak would require initiating operator investigation and securing transfers.
- There is non-credited indication/alarm in the control room of vent fan status. Any loss of power to the fan would be identified and corrected.
- Operators periodically monitor ventilation flow indication. Loss of power to or failure of the vent fan would result in a low flow condition and alert operators to a potential problem.
- Mechanical failure would most likely be preceded by a long period of indications that the fan was failing. A relatively small amount of ventilation is required to maintain DB vapor space below 25% of the LFL.
- The dampers are passive in nature; once set, they will not move without operator action. In addition, periodic monitoring of the local flow indication would detect this failure and operations would correct the problem.

4.4.6 H-AREA DIVERSION BOX 4 PASSIVE VENT

4.4.6.1 Safety Function and Functional Requirements

The HDB-4 Passive Vent provides a filtered release path to minimize the potential for a release of radiological material to the environment. The HDB-4 Passive Vent is required during normal operations (during sump jetting operations).

The HDB-4 Passive Vent is credited as an SS control for the following event:

- Aerosolization Events

4.4.6.2 System Description

HDB-4 has a passive vent consisting of vent piping and a HEPA filter that filters any release though the DB vent.

4.4.6.3 System Evaluation

Functionality is assured through the implementation of the Structural Integrity Program and associated testing/inspection.

The associated section of Table 4.4-2 summarizes the DR evaluation for the HDB-4 Passive Vent. The HDB-4 Passive Vent meets the DRs for an SS SSC.

4.4.7 VALVE BOX (INCLUDING DRAIN VALVE BOX) CONDUCTIVITY PROBES AND HIGH LEVEL ALARMS

4.4.7.1 Safety Function and Functional Requirements

VB (including Drain VB) Conductivity Probes and High Level Alarms provide a control room alarm, upon the detection of a liquid waste level greater than the initial waste volumes given in Chapter 3, to mitigate a release of radioactive material to the environment; and to limit flammable vapor accumulation in the VB. The VB High Level Alarms are used to initiate operator actions to limit the amount of waste in the VB.

VBs (including Drain VBs) that are in the transfer path for High-Rem transfers require sump conductivity probes with high level alarm. VB Conductivity Probes and High Level Alarms are required during normal operations.

VB (including Drain VB) Conductivity Probes and High Level Alarms are credited as an SS control for the following events:

- Transfer Facility Explosions
- Transfer Error/SMP Waste Release

4.4.7.2 System Description

The major components comprising each VB (including Drain VB) Conductivity Probe and Alarm include a stainless steel sensing probe, aircraft cable/wiring, level sensing relay, and control room panel alarm/annunciator. In addition, some systems utilize a safety certified PLC to relay the alarm signal from a local control room to a central control room (Figure 4.4-20). Power supplies to the sensing circuit and annunciator, and the functional test switch are not within the SS boundary. See Figure 4.3-2. Additionally, the VB (including Drain VB) Conductivity Probe and Alarm circuits may utilize time delay relays (less than or equal to 60 seconds) to avoid relay chatter associated with electronic noise signals. This time delay period, prior to alarm actuation, is judged to have an insignificant impact on initiating operator actions for the event.

All active and passive components that comprise the sensing and instrumentation circuit are considered SS components. These components include but are not limited to the signal cable, grounding pathway, terminal blocks, cable connectors, sensing relays, time delay relays, alarm relays, alarm bistables, annunciators, and safety PLCs (fiber optic alarm loop). The control room alarm must provide both audible and visual indications of the alarm condition.

4.4.7.3 System Evaluation

Functionality is assured through the implementation of applicable SRs, as identified in the TSRs.

The associated section of Table 4.4-2 summarizes the DR evaluation for the VB (including Drain VB) Conductivity Probes and High Level Alarms. A general assessment of the applicable DRs is provided below. Subsequent to the initial DR evaluation (Ref. 15), additional assessments were performed to evaluate the impact of multiplexing the alarm signal to a central control room using a safety certified PLC. These assessments (Ref. 39, 40, 52) concluded that multiplexing the alarm signal using a safety certified PLC had a negligible impact on the overall system failure probability and the SSCs are deemed acceptable to meet their SS requirements, assuming the requirements of Section 4.4 are met.

DR-3 Functionality

VB (including Drain VB) Conductivity Probes and High Level Alarms have demonstrated a high degree of reliability to perform their credited function. However, there are vulnerabilities in the system, such as failure during a loss of power, loss of input signal or failure of the level sensing relay/circuit. Based on the reasons/discussions stated below, VB (including Drain VB) Conductivity Probes and High Level Alarms are deemed acceptable to meet their SS requirements:

- The instrument loop periodic testing provides assurance that power is available and that the entire loop including the applicable panel alarm, is functioning properly when the tests are accomplished. The likelihood of relay failure or losing power during the period between these surveillances and at the same time having an event that leaks waste into a VB is highly unlikely.

- A total loss of power resulting in a loss of lighting, multiple indications, and control room instruments will be obvious to operators such that corrective action may be taken. Only a loss of power or electrical signal to a very selective circuit(s) might go undetected.
- In cases where a VB contains an accumulation of liquid waste (not actually contacting the probe) or high humidity, the level sensing relays have demonstrated contact chatter and premature failure. With the exception of this vulnerability, these instruments have demonstrated a high degree of reliability to perform its credited function. This vulnerability is judged acceptable because requirements specify that conductivity probe instrument loops be periodically tested. This test demonstrates the operability of all active and passive components of the instrument with the exception of a limited portion of the common return path encompassing the box grounding scheme. Additionally it verifies that power to the applicable monitored alarm panel and sensing circuits is available.

4.4.8 PUMP PIT CONDUCTIVITY PROBES AND HIGH LEVEL ALARMS

4.4.8.1 Safety Function and Functional Requirements

PP Conductivity Probes and High Level Alarms provide a control room alarm, upon detection of a liquid waste level greater than the initial waste volumes given in Chapter 3, to mitigate a release of radioactive material to the environment; and ensure the amount of waste in the PP does not produce flammable conditions. PP High Level Alarms are used to initiate operator actions to limit the amount of waste to less than the initial waste volumes given in Chapter 3.

The HDB-8 sump and HPP-7 sump conductivity probes and high level alarms support the monitoring and alarm function of the HDB-8 Complex LDBs. PP Conductivity Probes and High Level Alarms are required during normal operations.

PP Conductivity Probes and High Level Alarms are credited as an SS control for the following events:

- Transfer Error/SMP Waste Release

4.4.8.2 System Description

The major components comprising each PP Conductivity Probe and High Level Alarm include a stainless steel sensing probe, aircraft cable/wiring, level sensing relay, and control room panel alarm/annunciator. In addition, some systems utilize a safety certified PLC to relay the alarm signal from a local control room to a central control room (Figure 4.4-20). Power supplies to the sensing circuit and annunciator, and the functional test switch are not within the SS boundary. See Figure 4.3-2. Additionally, the PP Conductivity Probe and High Level Alarm circuits may utilize time delay relays (less than or equal to 60 seconds) to avoid relay chatter associated with electronic noise signals. This time delay period, prior to alarm actuation, is judged to have an insignificant impact on initiating operator actions for the event.

All active and passive components that comprise the sensing and instrumentation circuit are considered SS components. These components include but are not limited to the signal cable, grounding pathway, terminal blocks, cable connectors, sensing relays, time delay relays, alarm relays, alarm bistables, annunciators, and safety PLCs (fiber optic alarm loop). The control room alarm must provide both audible and visual indications of the alarm condition.

4.4.8.3 System Evaluation

Functionality is assured through the implementation of applicable SRs, as identified in the TSRs.

The associated section of Table 4.4-2 summarizes the DR evaluation for the PP Conductivity Probes and High Level Alarms. A general assessment of the applicable DRs is provided below. Subsequent to the initial DR evaluation (Ref. 15), additional assessments were performed to evaluate the impact of multiplexing the alarm signal to a central control room using a safety certified PLC. These assessments (Ref. 39, 40, 52) concluded that multiplexing the alarm signal using a safety certified PLC had a negligible impact on the overall system failure probability and the SSCs are deemed acceptable to meet their SS requirements, assuming the requirements of Section 4.4 are met.

DR-3 Functionality

PP Probes and High Level Alarms have demonstrated a high degree of reliability to perform their credited function. However, there are vulnerabilities in the system, such as failure during a loss of power, loss of input signal or failure of the level sensing relay/circuit. Based on the reasons/discussions stated below, PP Conductivity Probes and High Level Alarms are deemed acceptable to meet their SS requirements:

- The instrument loop periodic testing provides assurance that power is available and that the entire loop including the applicable panel alarm, is functioning properly when the tests are accomplished. The likelihood of relay failure or losing power during the period between these surveillances and at the same time having an event that leaks waste into a PP is highly unlikely.
- A total loss of power resulting in a loss of lighting, multiple indications, and control room instruments will be obvious to operators such that corrective action may be taken. The High Level Alarm will detect a loss of power to the sensor.
- In cases where a PP contains an accumulation of liquid waste (not actually contacting the probe) or high humidity, the level sensing relays have demonstrated contact chatter and early failure. With the exception of this vulnerability, these instruments have demonstrated a high degree of reliability to perform its credited function. This vulnerability is judged acceptable because requirements specify that conductivity probe instrument loops be periodically tested. This test demonstrates the operability of all active and passive components of the instrument with the exception of a limited portion of the common return path encompassing the PP grounding scheme. Additionally it verifies that power to the applicable monitored alarm panel and sensing circuits is available.

4.4.9 PUMP PIT/PUMP TANK VENTILATION SYSTEMS WITH PASSIVE VENTS

4.4.9.1 Safety Function and Functional Requirements

PP/Pump Tank Ventilation Systems control the concentration of flammable vapors to less than or equal to 25% of the LFL conditions in the pump tanks (and applicable DBs) by maintaining a minimum, continuous, measured purge flow (measured by a flow instrument). PP/Pump Tank Ventilation Systems provide confinement capabilities and a filtered release path to minimize the potential for a release of radiological material to the environment. The PP/Pump Tank Ventilation Systems also provide an active elevated release path (via the exhaust stack) to ensure adequate dispersion of potential chemical vapors from the PP/pump tank vapor space during Chemical Cleaning Transfers (or vent/drain operations associated with the transfer). DB ventilation for FDB-2, FDB-4, and HDB-2 is provided by their associated PP/Pump Tank Ventilation Systems.

Passive Vents on a pump tank (without an operating fan) extends the time to reach LFL, when a pump tank is not receiving steam jetted transfers, thereby providing sufficient time to restore active ventilation before exceeding flammable conditions. The PP/pump tank hydrogen concentration can be reduced to below flammable conditions when restarting active ventilation after reliance on the Passive Vents.

Passive Vents are required during normal operations, during an external fire event, during and following Tornado/High Winds, and during and following a Seismic Event. Passive Vents maintain vapor space communication between the pump tank and PP. The remaining portions of the PP/Pump Tank Ventilation Systems are required during normal operations only.

The PP/Pump Tank Ventilation Systems with Passive Vents are credited as an SS control for the following events:

- Pump Pit and Pump Tank Explosion
- Transfer Error/SMP Waste Release
- Aerosolization Events
- Waste Tank/Pump Tank Overheating
- Tornado/High Winds Event (Passive Vents only)
- Seismic Event (Passive Vents only)
- Wildland Fire (Passive Vents only)
- Loss of Offsite Power (Passive Vents only)

4.4.9.2 System Description

The PP/Pump Tank Ventilation Systems provide the ventilation requirements for the following associated DBs:

- FPP-1 provides ventilation for FDB-2

- FPP-2 and FPP-3 provides ventilation for FDB-4
- HPP-2, HPP-3, and HPP-4 provides ventilation for HDB-2
- HPP-5 and HPP-6 have no associated DB

The major SS components typically comprising the PP/Pump Tank Ventilation Systems are listed below and shown in Figures 4.4-2 and 4.4-3 (HPP-2/HPP-3/HPP-4 Ventilation System does not have a demister, condenser, or reheater):

- Demister, condenser, steam reheater
- Outlet HEPA filter assemblies
- Exhaust fan/motor
- Exhaust stack
- Manual dampers
- Ventilation ductwork
- Ventilation flow instrumentation

The inlet airflow and flow communication between the associated DBs and PPs varies for PP/Pump Tank Ventilation Systems as described below. Inlet supply headers attached to the DB or PP, described below, contain a HEPA filter. The inlet HEPA filters are not credited for a filtration function on PP/Pump Tank Ventilation Systems; however, the inlet HEPA filters/housings for FDB-2, HPP-2/HPP-3/HPP-4, and HPP-5 are functionally classified SS to permit required airflow to the applicable cell.

- FDB-2: The purge airflow is drawn into FDB-2 through an SS inlet supply header (attached to the DB) or cell penetrations (e.g., cell covers/plugs, equipment penetrations) by operation of the FPP-1 Ventilation System. After sweeping the DB vapor space, the air and flammable vapors are removed through a vent duct to FPP-1.
- FPP-1: The purge airflow is drawn into FPP-1 through a vent duct from FDB-2 or cell penetrations (e.g., cell covers/plugs, equipment penetrations) by operation of the FPP-1 Ventilation System.
- FDB-4: The purge airflow is drawn into FDB-4 through an inlet supply header (attached to the DB), vent slots, or cell penetrations (e.g., cell covers/plugs, equipment penetrations) by operation of the FPP-2/FPP-3 Ventilation System. Since there are multiple paths for air inflow, the air introduction points to the DB are not required to be functionally classified SS. After sweeping the DB vapor space, the air and flammable vapors are removed through vent slots to FPP-3 (via a pipe chase) or a vent/drain slot to FPP-2.
- FPP-2: The purge airflow is drawn into FPP-2 through a vent/drain slot from FDB-4 or cell penetrations (e.g., cell covers/plugs, equipment penetrations) by operation of the FPP-2/FPP-3 Ventilation System.

- FPP-3: The purge airflow is drawn into FPP-3 through vent slots from FDB-4 (via a pipe chase) or cell penetrations (e.g., cell covers/plugs, equipment penetrations) by operation of the FPP-2/FPP-3 Ventilation System.
- HDB-2: The purge airflow is drawn into HDB-2 through an inlet supply header (attached to the DB) or cell penetrations (e.g., cell covers/plugs, equipment penetrations) by operation of the HPP-2/HPP-3/HPP-4 Ventilation System. After sweeping the DB vapor space, the air and flammable vapors are removed through a sump drain line to HPP-3. However, based on the System Evaluation for the HDB-2 purge flow, ventilation for HDB-2 is not credited and not required to be functionally classified SS for HDB-2 aspects (see Section 4.4.9.3).
- HPP-2/HPP-4: The purge airflow is drawn into the PPs through an SS inlet supply header (attached to the PP) or cell penetrations (e.g., cell covers/plugs, equipment penetrations) by operation of the HPP-2/HPP-3/HPP-4 Ventilation System.
- HPP-3: The purge airflow is drawn into HPP-3 through an SS inlet supply header (attached to the PP), cell penetrations (e.g., cell covers/plugs, equipment penetrations), or through the sump drain line from HDB-2 by operation of the HPP-2/HPP-3/HPP-4 Ventilation System.
- HPP-5: The purge airflow is drawn into HPP-5 through an SS inlet supply header (attached to the PP) or cell penetrations (e.g., cell covers/plugs, equipment penetrations) by operation of the HPP-5/HPP-6 Ventilation System.
- HPP-6: The purge airflow is drawn into HPP-6 through a vent duct from HPP-5 or cell penetrations (e.g., cell covers/plugs, equipment penetrations) by operation of the HPP-5/HPP-6 Ventilation System.

From the PP, air and flammable vapors are removed through an exhaust header which is attached to the pump tank by the use of a jumper. A purge fan pulls purge flow into the pump tank vapor space, from the PP, through a passive vent and non-credited pump tank overflow line. After sweeping the tank vapor space, the air and flammable vapors are removed by the exhaust header. In the exhaust header, the air/vapor mixture typically passes through a demister, condenser, and steam reheater. From the reheater, the mixture passes through an outlet HEPA filter assembly, manual damper, flow element, and through an exhaust blower/fan through the exhaust fan stack to atmosphere. The SS function requires the structural integrity of the pressure boundary of the exhaust ventilation system and its components. The structural integrity of the pressure boundary includes internal portions of the system, where necessary, to maintain the flow path boundary of the system (e.g., reheater steam tubes). The stack is SS for structural integrity to prevent a failure (such as crimping) that could cause a loss of ventilation flow.

The PP/Pump Tank Ventilation Systems shall be maintained at least as a Level 4 duct class (per Reference 57) for normal permissible leakage rates. Per Reference 58, the bounding in-leakage rate associated with Level 4 duct class for all transfer facilities is 1 scfm. This potential in-leakage rate is extremely small and the minimum ventilation flow rate requirements from Chapters 3 and 5 are derived using various bounding conditions (e.g., radiolytic hydrogen generation rate, dissolved hydrogen from steam jetted transfers). Additionally, nominal flow rates from transfer facility ventilation systems typically exceed minimum ventilation flow rate

requirements by a significant amount. Therefore, no adjustment is necessary to flow rate requirements (determined/provided in the DSA/TSR) to account for the Level 4 duct class permissible leakage rates.

The PP/Pump Tank Ventilation Systems also provide an active elevated release path (via the exhaust stack) to ensure adequate dispersion of potential chemical vapors from the PP/pump tank vapor space during Chemical Cleaning Transfers (or vent/drain operations associated with the transfer). The SS airborne confinement boundary for this function includes all the ventilation ductwork/pipes from the PP/pump tank up to and including the stack discharge (with adequate height as determined by the Industrial Hygiene Program).

The pump tank Passive Vent (excluding HPT-7, HPT-8, HPT-9, and HPT-10) is used to interconnect the pump tank vapor space with the PP. During normal operation, purge flow is from the PP, through the passive vent, into the pump tank. On a loss of ventilation flow, the Passive Vents effectively increase the size of the pump tank vapor space by providing a flow path for naturally buoyant flammable gases to flow from the pump tank into the PP.

The support systems for the ventilation system components (e.g., flushwater, CRW, steam) are not required to support the SS function of the PP/Pump Tank Ventilation System. Failure of these support systems was evaluated and accepted as not compromising the SS airborne confinement function provided Ventilation System Performance Monitoring is completed. PP/Pump Tank Ventilation Systems require an outlet HEPA filter efficiency of at least 99.5% to mitigate the consequences of aerosolization, overflow, and overheating events.

Ventilation System Performance Monitoring is required when HEPA filtration is credited as a control in an active ventilation system for mitigating an event. HEPA filters are susceptible to plugging and possible breakthrough when subjected to high moisture loading, which would render the filter incapable of performing its intended function. Ventilation System Performance Monitoring ensures that the HEPA filter is operating properly, and capable of performing its credited function.

Ventilation System Performance Monitoring checks the ventilation system periodically to ensure that HEPA filter plugging or breakthrough has not occurred. Monitoring is performed prior to beginning an evolution to establish baseline conditions, and periodically thereafter.

4.4.9.3 System Evaluation

Functionality is assured through the implementation of applicable SRs, as identified in the TSRs, and the Structural Integrity Program and associated testing/inspection.

The associated section of Table 4.4-2 summarizes the DR evaluation for the PP/Pump Tank Ventilation Systems with Passive Vents. A general assessment of the applicable DRs is provided below.

DR-3 Functionality

There are vulnerabilities associated with the PP/Pump Tank Ventilation Systems such as susceptibilities to loss of power, mechanical component failure (i.e., fans, dampers), and failure of flow indication. Based on the reasons/discussions stated below, the PP/Pump Tank Ventilation Systems with Passive Vents are deemed acceptable to meet their SS requirements:

- On loss of the power to the ventilation systems, there will be sufficient time to restore power prior to a flammable mixture developing in the pump tank or PP, assuming that the transfer through the facility is immediately terminated on a loss of ventilation.
- When a pump tank (excluding the HDB-8 Complex pump tanks and pump tanks receiving canyon transfers) will be receiving steam jetted transfers greater than 1,200 gallons, a backup portable ventilation system will be installed and available for immediate use in case of a failure of the installed active ventilation system. A surveillance to ensure ventilation operation will be performed periodically.
- PPs normally contain little or no liquid. Barometric breathing alone will prevent exceeding 25% of the LFL for liquid volumes as great as 1.29% of the structure volume.
- PPs are equipped with a leak detection system; an indication of a leak would require initiating operator investigation.
- There is non-credited indication/alarm in the control room of vent fan status. Any loss of power to the fan would be identified and corrected.
- Operators periodically monitor non-credited HEPA filter dP. Loss of power to or failure of the vent fan would result in a zero dP condition and alert operators to a potential problem.
- Mechanical failure would most likely be preceded by indications that the fan was failing. A small amount of ventilation is required to maintain the vapor space of the PP/pump tank/DB below 25% of the LFL.
- The dampers are passive in nature; once set, they will not move without operator action. In addition, periodic monitoring of the local flow indication would detect this failure and operations would correct the problem. For HDB-2 there is a non-credited low flow alarm in the control room that would alert operators for the need to take corrective action.
- The local flow indicators are periodically monitored to ensure the systems are operating with sufficient continuous flow to remove released hydrogen.

There are vulnerabilities associated with crediting ventilation on HDB-2 due to the necessary flow communication needed between HDB-2 and HPP-3 through a sump drain line. Since liquid accumulation from an initiating event (e.g., transfer line leak causing a Transfer Facility Explosion) could block the necessary airflow communication, the ventilation for HDB-2 will not be credited (not functionally classified SS). Per Chapter 3, ventilation for HDB-2 would only be required during a High-Rem waste transfer. Therefore, High-Rem waste transfers through HDB-2 are prohibited.

4.4.10 H-AREA DIVERSION BOX 8 PROCESS VESSEL VENTILATION SYSTEM

4.4.10.1 Safety Function and Functional Requirements

The HDB-8 Process Vessel Ventilation (PVV) System controls the concentration of flammable vapors to less than or equal to 25% of the LFL conditions in the HDB-8 pump tanks by maintaining a minimum, continuous, measured purge flow (by use of a flow instrument). The HDB-8 Process Vessel Ventilation System provides passive confinement capabilities and a filtered release path to mitigate a release of radiological material to the environment.

The HDB-8 Process Vessel Ventilation System is required during normal operations and following a Seismic Event.

The non-operating (standby) PVV exhaust fan is required to automatically start on ventilation low flow.

The HDB-8 Process Vessel Ventilation System is credited as an SS control for the following events:

- Pump Pit and Pump Tank Explosion
- Transfer Error/SMP Waste Release
- Aerosolization Events
- Waste Tank/Pump Tank Overheating
- Seismic Event
- Loss of Offsite Power

4.4.10.2 System Description

The major SS components comprising the HDB-8 Process Vessel Ventilation System are listed below and shown in Figure 4.4-4:

- Demister, condenser, steam reheater
- Outlet HEPA filter assemblies
- Exhaust fan/motor
- Exhaust stack
- Manual dampers
- Ventilation ductwork
- Ventilation flow instrumentation/interlock/alarm

The purge airflow is drawn into HDB-8 through an inlet supply header (attached to the DB) or cell penetrations (e.g., cell covers/plugs, equipment penetrations) by operation of the HDB-8 PVV System. Operating history indicates that sufficient airflow is drawn into the cells even when the damper on the inlet supply header is closed. Since there are multiple paths for air

inflow, the air introduction points to the DB/PPs are not required to be functionally classified SS. The inlet supply line has an attached HEPA filter; however, the filter is not required to support the SS function of the ventilation system. From the DB, the air is drawn into each of the four PPs through a pipe chase or through cell penetrations (e.g., cell covers/plugs, equipment penetrations) and flows through the pump tanks' ventilation inlet lines into the pump tanks. One of the two available exhaust fans is operating and pulls the air out of each pump tank into a common discharge header. The non-operating (standby) exhaust fan will automatically start and associated dampers open/close on ventilation low flow.

The discharge header contains a condenser, mist eliminator, reheater, two HEPA filters in parallel arrangement, and a flow indicating device before discharging the exhaust to atmosphere via one of two exhaust fans and an exhaust stack. The SS function requires ventilation fan operation and the structural integrity of the pressure boundary of the ventilation system and its components. The structural integrity of the pressure boundary includes internal portions of the system, where necessary, to maintain the flow path boundary of the system (e.g., reheater steam tubes). The stack is SS for structural integrity to prevent a failure (such as crimping) that could cause a loss of ventilation flow.

The HDB-8 Process Vessel Ventilation System shall be maintained at least as a Level 4 duct class (per Reference 57) for normal permissible leakage rates. Per Reference 58, the bounding in-leakage rate associated with Level 4 duct class for all transfer facilities is 1 scfm. This potential in-leakage rate is extremely small and the minimum ventilation flow rate requirements from Chapters 3 and 5 are derived using various bounding conditions (e.g., radiolytic hydrogen generation rate, dissolved hydrogen from steam jetted transfers). Additionally, nominal flow rates from transfer facility ventilation systems typically exceed minimum ventilation flow rate requirements by a significant amount. Therefore, no adjustment is necessary to flow rate requirements (determined/provided in the DSA/TSR) to account for the Level 4 duct class permissible leakage rates.

The pump tank ventilation inlet lines terminate at an elevation that is higher than the level attained by the total of 10,000 gallons plus residual volume in the sumps (10,000 accounts for the expected volume addition due to the maximum mitigated spill). This ensures that the ventilation inlet lines are not blocked by liquid level during system operation.

A fan inlet flow element senses the airflow at the inlet of the fans. A flow indicating transmitter provides an electronic flow signal to provide flow indication, low flow alarm, and a low flow interlock to start the standby fan. Flow indication and low flow alarm are provided in the control room. The control room alarm must provide both audible and visual indications of the alarm condition.

An SS interlock (seismically qualified) ensures that the standby fan starts and dampers reposition on low ventilation flow, including low flow caused by loss of power to the operating fan. The low flow interlock circuits may utilize time delay relays (less than or equal to 45 seconds) to avoid relay chatter associated with electronic noise signals and to allow smooth transition from the primary fan to the standby fan. This time delay period, prior to interlock actuation, is necessary for proper system operation. An SS diesel generator (see Section 4.4.11) provides

backup power to the PVV exhaust fans (and non-credited Distributed Control System [DCS]) when a loss of normal power to HDB-8 is detected.

The support systems for the ventilation system components (e.g., flushwater, condenser cooling, steam) are not required to support the SS function of the ventilation system. Failure of these support systems was evaluated and accepted as not compromising the SS airborne confinement function provided Ventilation System Performance Monitoring is completed. The PVV System requires an outlet HEPA filter efficiency of at least 99.5% to mitigate the consequences of aerosolization, overflow, and overheating events.

Ventilation System Performance Monitoring is required when HEPA filtration is credited as a control in an active ventilation system for mitigating an event. HEPA filters are susceptible to plugging and possible breakthrough when subjected to high moisture loading, which would render the filter incapable of performing its intended function. Ventilation System Performance Monitoring ensures that the HEPA filter is operating properly, and capable of performing its credited function.

Ventilation System Performance Monitoring checks the ventilation system periodically to ensure that HEPA filter plugging or breakthrough has not occurred. Monitoring is performed prior to beginning an evolution to establish baseline conditions, and periodically thereafter.

4.4.10.3 System Evaluation

Functionality is assured through the implementation of applicable SRs, as identified in the TSRs, and the Structural Integrity Program and associated testing/inspection.

The associated section of Table 4.4-2 summarizes the DR evaluation for the HDB-8 PVV System. A general assessment of the applicable DRs is provided below.

DR-3 Functionality

The HDB-8 PVV System is susceptible to failure because of loss of power, loss of air, or component failure. Based on the reasons/discussions stated below, the HDB-8 PVV System is deemed acceptable to meet its SS requirements:

- The HDB-8 ventilation normal power and the HDB-8 diesel generator (DG) are both susceptible to a common mode failure (i.e., lightning), but this vulnerability is accepted based on the low probability of this common mode failure occurring during an HDB-8 steam jetted transfer. The probability of this common mode failure is based on the frequency of lightning (anticipated) coupled with the probability of a steam jetted transfer through HDB-8 in a thunderstorm (unlikely) and the likelihood that one of the susceptible components is struck (unlikely).
- The HDB-8 PVV System is provided with backup power to the exhaust fans by a standby diesel generator.
- An SS interlock ensures that the PVV backup exhaust fan starts and dampers reposition following a low flow signal.

- DB and PPs normally contain little or no liquid. Barometric breathing alone will prevent exceeding 25% of the LFL for liquid volumes as great as 1.29% of the structure volume.
- PPs are equipped with a leak detection system; an indication of a leak would require initiating operator investigation.
- There is non-credited indication/alarm in the control room of vent fan status which would allow fan failures (including loss of power) to be identified and corrected.
- An SS low exhaust flow alarm is provided in the control room that would alert operators for the need to take corrective action.
- When one HDB-8 PVV System exhaust fan becomes inoperable, TSRs require stopping steam jetted transfers into HDB-8 pump tanks and require isolating HDB-8 pump tank and sump transfer jets from their steam supplies.
- Operators periodically monitor non-credited HEPA filter dP. Loss of power to or failure of the vent fan would result in a zero dP condition and alert operators to a potential problem
- Mechanical failure would most likely be preceded by indications that the fan was failing. A small amount of ventilation is required to maintain the vapor space of the DB/PP/pump tank below 25% of the LFL. Even if a fan's flow were very severely degraded, as long as the fan was rotating, ventilation would most likely be sufficient to prevent LFL.
- Air operated inlet dampers (for the exhaust fans) fail open on a loss of power or loss of Instrument Air (IA) (causing purge bypass flow). Operations personnel are required to ensure exhaust fan inlet damper positions to prevent bypass flow conditions through the idle exhaust fan as a post event response (Ref. 19).
- The ventilation flow indicator is periodically monitored to ensure the system is operating with sufficient continuous flow to remove generated hydrogen.

4.4.11 H-AREA DIVERSION BOX 8 DIESEL GENERATOR

4.4.11.1 Safety Function and Functional Requirements

The HDB-8 Diesel Generator provides a backup power supply to the HDB-8 PVV System on a loss of the normal power supply. The HDB-8 DG is required to automatically start and supply electrical power to the HDB-8 PVV System when a loss of normal power to HDB-8 electrical system is detected.

The HDB-8 DG is required during normal operations and following a Seismic Event.

The HDB-8 DG is credited as an SS control in support of the HDB-8 PVV System operation for the following events:

- Pump Pit and Pump Tank Explosion
- Seismic Event

- Loss of Offsite Power

4.4.11.2 System Description

The major SS components and support systems comprising the HDB-8 DG are listed below and shown in Figures 4.4-5 and 4.4-6:

- HDB-8 DG
  - Diesel Engine
  - Generator
  - Lubrication System
- Fuel Oil System
  - Fuel Oil Tank
  - Low Pressure Fuel Oil Pump
  - Water Separator and Filter
  - Fuel Oil Injection Pump
- Cooling Water System
  - Cooling Water Pump
  - Radiator and Fan
- Battery Start System
  - Battery
  - Battery Charger
  - Battery Disconnect
  - DG Starter
- DG Breaker
- Automatic Transfer Switch (ATS)

The HDB-8 DG provides backup 480 VAC power to a selected set of equipment and instrument loads (e.g., HDB-8 PVV fans, control instrumentation) fed from the stub bus portion of MCC B30. The DG is designed to provide backup power through an ATS. The ATS is equipped with adjustable timing controls for starting the DG and for preventing false starts. The ATS is electrically and mechanically interlocked to prevent simultaneous supply (paralleling) of both the normal and standby electrical power. The DG output breaker electrically connects the DG to the MCC.

The DG is interlocked with the ATS mounted on MCC B30, to automatically start the DG upon a loss of normal electrical power. The DG auto start controls include the Engine Mode Switch, which provides for both automatic and manual modes of operation. The DG can be controlled

from the non-credited DCS operator consoles in the 241-2H Control Room. The DG can also be controlled locally at the DG enclosure.

The Battery Start System provides DC power to the diesel engine starter motor located on the diesel engine. The diesel battery also provides 12-VDC power to the DG control panel for instrumentation and controls.

The fuel oil storage tank is a 192-gallon tank that, at approximately 50% capacity, can provide up to 40 hours of continuous operation at full rated load (no specific duration of operation was credited in Chapter 3). The diesel fuel oil system supplies the diesel engine with fuel oil for combustion. The fuel oil flows from the storage tank to an in-line low pressure fuel oil pump. A water separator and filter, and a fuel oil injection pump are on the discharge side. The fuel oil injection pump provides pressurized fuel to the fuel inlet manifold in the cylinder head to the injectors.

Instrumentation, controls, and alarms not discussed above for the HDB-8 DG or support systems are SS components because they are an integral part of the unit. However, these components do not provide a credited SS instrumentation, control, or alarm function.

4.4.11.3 System Evaluation

Functionality is assured through the implementation of applicable SRs, as identified in the TSRs. Additionally, functionality of some support systems (e.g., fuel oil, lube oil) is assured through implementation of the NMMP and associated testing/inspection.

The associated section of Table 4.4-2 summarizes the DR evaluation for the HDB-8 DG. A general assessment of the applicable DRs is provided below.

DR-3 Functionality

The HDB-8 DG and support systems were designed to perform the current functions with a high degree of reliability. However, there are vulnerabilities in the system, such as failure of the DG to start, run, and/or load.

Based on the reasons/discussions stated below, the HDB-8 DG and support systems are deemed acceptable to meet their SS requirements:

- There are multiple indications that will alert operators that the systems have failed to operate properly. Therefore, operators can correct the failure by manually starting the DG and/or manually closing the DG output breaker after the cause for the trip has been determined and corrected.
- The overcurrent protective devices on non-SS components connected to the MCC B30 backup power bus are selectively coordinated with the DG output breaker to localize a fault condition and restrict outages to the affected equipment or portion of the backup power distribution system. Flow and fan status indication provide notification of HDB-8 PVV System fan status. If the DG output breaker is tripped

causing the fan to go off due to an overcurrent condition, the breaker can be closed manually after the cause for the trip has been determined and corrected.

Light load operations of the HDB-8 DG are not a concern. Based on manufacturer's recommendations, light load operation is considered to be the DG operating at less than 30% capacity. This could cause damage to the DG if operated under this condition for an extended period of time. During surveillance testing, load tests are performed with the DG at greater than 30% capacity and no-load tests are not typically performed. Another condition that could cause the DG to run unloaded would be a spurious start of the DG with normal power still available. However, under this condition indications are available to alert operators to the DG start and procedures direct securing the DG, thus limiting the time the DG is operated unloaded. Based on this discussion, damage to the DG as a result of running at light load operations for extended periods of time is not a concern.

The HDB-8 DG has the following vulnerability associated with its operation:

- Replenishment of the fuel oil following a Seismic Event.

4.4.12 LEAK DETECTION BOXES/MODIFIED LEAK DETECTION BOXES/LEAK PROBE SLEEVES/CLEAN OUT PORTS

4.4.12.1 Safety Function and Functional Requirements

LDBs/MLDBs/LPSs provide passive containment to channel core pipe leakage to a leak detection location. LDBs/MLDBs/LPSs/COPs provide airborne waste confinement following a transfer line core pipe explosion or core pipe waste release. LDBs/MLDBs/LPSs/COPs are required during normal operations.

LDBs/MLDBs/LPSs/COPs are credited as an SS control for the following events:

- Transfer Line and Transfer Line Jacket/Encasement Explosions
- Transfer Facility Explosions (LDBs along leak path to the LDB Drain Cell only)
- Transfer Error/SMP Waste Release (LDBs/MLDBs/LPSs only)

For the purpose of some Chapter 3 events, the Transfer Line Jacket includes all secondary containments (i.e., LDBs, MLDBs, LPSs, and COPs) connected to the jacket. Transfer Line Jackets are described in Section 4.4.3.

4.4.12.2 System Description

A connection, typically at the low point of a transfer line jacket, directs leakage to a LDB. LDBs are horizontal, carbon steel cylinders, with capped ends. They are located below grade level and close to the tank or DB that the piping penetrates. Each LDB is coated with special paints to protect it from corrosion. The LDBs have a 1-inch diameter overflow line that extends up inside the LDB. Some LDBs have the drain and overflow piping permanently plugged. For those LDBs that have drain lines, the drain line is normally plugged which allows any leakage into the LDB to collect and contact the installed conductivity probe. To support LDB conductivity probe

operability, the drain plug must be installed and must prevent waste from draining past the probe undetected. The HDB-8 LDBs and overflow lines use a common drain header leading to the HDB-8 and HPP-7 sumps. Since the sump conductivity probes are used to monitor for leakage into HDB-8 LDBs, the drain header must remain open and unplugged to ensure flow into the sumps.

MLDBs are used in place of LDBs in areas where the LDBs cannot be gravity drained. Part of the MLDB extends above the ground. Each MLDB is coated with special paint to protect it from corrosion. The MLDB consists of a vertical pipe flanged at the top with three pipelines protruding out of the top of the flange. MLDBs have a level conductivity probe located near the bottom of the MLDB. A cleanout/smear pipe provides a means to sample, smear, or measure the contamination level of the MLDB. The cleanout/smear pipe also can be used to empty the MLDB, using a portable pump.

LPSs are lengths of transfer line jackets that have penetrations containing conductivity probes used for leak detection. Liquids collected by LPSs are removed using a portable pump.

COPs provide access for flushing or catheterization of the Gravity Drain Lines. COPs have non-credited conductivity probe leak detection. Any leakage within the COP is directed to an LDB or waste tank.

4.4.12.3 System Evaluation

Functionality is assured through the implementation of the Structural Integrity Program and associated testing/inspection.

The associated section of Table 4.4-2 summarizes the DR evaluation for the LDBs/MLDBs/LPSs/COPs. A general assessment of the applicable DRs is provided below.

DR-3 Functionality

The above ground portions of the MLDBs are susceptible to failure from non-SS component interactions. Based on the reason/discussion stated below, LDBs/MLDBs/LPSs/COPs are deemed acceptable to meet their SS requirements

- The Administrative Controls impose the Configuration Management Program, Traffic Control Program, and Critical Lift Program to address those attributes necessary to protect the MLDBs from damage by a non-SS item.

4.4.13 LEAK DETECTION BOX/MODIFIED LEAK DETECTION BOX/LEAK PROBE SLEEVE CONDUCTIVITY PROBES AND HIGH LEVEL ALARMS

4.4.13.1 Safety Function and Functional Requirements

LDB/MLDB/LPS Conductivity Probes and High Level Alarms provide a control room alarm upon detection of liquid waste to minimize the potential for a release of radioactive material to the environment. The LDBs that drain to the LDB Drain Cell provides a control room alarm upon detection of liquid waste to ensure that the waste does not produce a flammable vapor

space in the Drain Cell. The HDB-8 and HPP-7 sump conductivity probes are used in place of the non-credited DCS monitored HDB-8 LDB conductivity probes. The LDB/MLDB/LPS High Level Alarms are used to initiate operator actions to limit the amount of waste leakage.

LDBs/MLDBs/LPSs that are in the transfer path for High-Rem transfers require conductivity probes with high level alarm. The LDB/MLDB/LPS Conductivity Probes and High Level Alarms are required during normal operations.

LDB/MLDB/LPS Conductivity Probes and High Level Alarms are credited as an SS control for the following events:

- Transfer Facility Explosions (LDBs along leak path to the LDB Drain Cell only)
- Transfer Error/SMP Waste Release

4.4.13.2 System Description

The major components of each LDB/MLDB/LPS Conductivity Probe and High Level Alarm include a stainless steel sensing probe, aircraft cable/wiring, level sensing relay, and control room panel alarm/annunciator. In addition, some systems utilize a safety certified PLC to relay the alarm signal from a local control room to a central control room (Figure 4.4-20). The conductivity probe is located near the point where the secondary containment jacket drain line enters the box or sleeve. Power supplies to the sensing circuit and annunciator, and the functional test switch are not within the SS boundary. See Figure 4.3-2. Additionally, the LDB/MLDB/LPS Conductivity Probe and High Level Alarm circuits may utilize time delay relays (less than or equal to 60 seconds) to avoid relay chatter associated with electronic noise signals. This time delay period, prior to alarm actuation, is judged to have an insignificant impact on initiating operator actions for the event.

All active and passive components that comprise the sensing and instrumentation circuit are considered SS components. These components include but are not limited to the signal cable, grounding pathway, terminal blocks, cable connectors, sensing relays, time delay relays, alarm relays, alarm bistables, annunciators, and safety PLCs (fiber optic alarm loop). The control room alarm must provide both audible and visual indications of the alarm condition.

Operability of LDB/MLDB/LPS Conductivity Probes and High Level Alarms is supported by the surrounding structure (see Section 4.4.12).

4.4.13.3 System Evaluation

Functionality is assured through the implementation of applicable SRs, as identified in the TSRs.

The associated section of Table 4.4-2 summarizes the DR evaluation for the LDB/MLDB/LPS Conductivity Probes and High Level Alarms. A general assessment of the applicable DRs is provided below. Subsequent to the initial DR evaluation (Ref. 15), additional assessments were performed to evaluate the impact of multiplexing the alarm signal to a central control room using a safety certified PLC. These assessments (Ref. 39, 40, 52) concluded that multiplexing the alarm signal using a safety certified PLC had a negligible impact on the overall system failure

probability and the SSCs are deemed acceptable to meet their SS requirements, assuming the requirements of Section 4.4 are met.

DR-3 Functionality

LDB/MLDB/LPS Conductivity Probes and High Level Alarms have demonstrated a high degree of reliability to perform their credited function. However, there are vulnerabilities in the system, such as failure during a loss of power, loss of input signal or failure of the level sensing relay/circuit. Based on the reasons/discussions stated below, LDB/MLDB/LPS Conductivity Probes and High Level Alarms are deemed acceptable to meet their SS requirements:

- The instrument loop periodic testing provides assurance that power is available and that the entire loop including the applicable panel alarm, is functioning properly when the Functional Tests are accomplished. The likelihood of relay failure or losing power during the period between these surveillances and at the same time having an event that leaks waste into an LDB/MLDB/LPS is highly unlikely.
- A total loss of power resulting in a loss of lighting, multiple indications, and control room instruments will be obvious to operators such that corrective action may be taken. Only a loss of power or electrical signal to a very selective circuit(s) might go undetected.
- In cases where an LDB/MLDB/LPS contains an accumulation of liquid waste (not actually contacting the probe) or high humidity, the level sensing relays have demonstrated contact chatter and premature failure. With the exception of this vulnerability, these instruments have demonstrated a high degree of reliability to perform its credited function. This vulnerability is judged acceptable because requirements specify that conductivity probe instrument loops be periodically tested. This test demonstrates the operability of all active and passive components of the instrument with the exception of a limited portion of the common return path encompassing the box grounding scheme. Additionally it verifies that power to the applicable monitored alarm panel and sensing circuits is available.

4.4.14 F-AREA PUMP TANK-1 PULSE TUBE AGITATOR LIQUID LEVEL INTERLOCK

4.4.14.1 Safety Function and Functional Requirements

The F-Area Pump Tank (FPT) FPT-1 Pulse Tube Agitator (PTA) Liquid Level Interlock mitigates a release of radioactive material to the environment by interlocking off the air supply to the PTA on pump tank low level.

The FPT-1 PTA Liquid Level Interlock is required during normal operations.

The FPT-1 PTA Liquid Level Interlock is credited as an SS control for the following event:

- Aerosolization Events

4.4.14.2 System Description

The major components comprising the FPT-1 PTA Liquid Level Interlock are listed below and shown in Figure 4.4-7:

- Controller
- Rotameters
- FPT-1 Weight Factor Level Transmitter
- Main Air Flow Valve

The controller monitors FPT-1 level using a signal from the pump tank weight factor level transmitter. On a pump tank low level condition, the controller ensures that the PTA system will either fail to start or will trip out to prevent aerosolization of pump tank contents. A failure to start or trip out by the controller will de-energize the solenoid valve at the Main Air Flow Valve. The de-energized solenoid valve vents IA from the Main Air Flow Valve causing it to go shut. The Main Air Flow Valve is designed to fail closed on a loss of IA or loss of power.

All active and passive components that comprise the sensing and instrumentation circuit are considered SS components. These components include but are not limited to the signal cable, grounding pathway, terminal blocks, cable connectors, and sensing relays.

4.4.14.3 System Evaluation

Functionality is assured through the implementation of applicable SRs, as identified in the TSRs. Implementation of the Severe Weather Response Program during freezing conditions shall ensure meeting the SS requirements. The Main Air Flow Valve and its associated solenoid valve are designed such that upon an input signal or loss of power/IA, IA is immediately vented off the Main Air Flow Valve. The combined timing to cause closure of the solenoid valve and Main Air Flow Valve is more than sufficient (i.e., seconds) to avoid the need for a TSR SR specifically on closure timing.

The associated section of Table 4.4-2 summarizes the DR evaluation for the FPT-1 PTA Liquid Level Interlock. A general assessment of the applicable DRs is provided below.

DR-2 Equipment Environment Consideration

During very cold weather it is possible that moisture that has accumulated over time in the air lines can freeze and cause a blockage of the air lines (there is no heat tracing). This blockage could prevent the flow of air to the pump tank components and thereby prevent the operation of the interlock from performing its safety function. A plug of ice forming in the Main Air Flow Valve IA line could prevent the valve from closing, and thereby, prevent the interlock from functioning. Because freezing in the IA system often impacts only selective components; alarms and pressure indicators may not be reliable during freezing conditions. Based on the reason/discussion stated below, the FPT-1 PTA Liquid Level Interlock is deemed acceptable to meet its SS requirements:

- The Severe Weather Response Program provides actions to prevent moisture freezing in the air supply lines.

DR-3 Functionality

The FPT-1 PTA Liquid Level Interlock was designed to perform its current requirements with a high degree of reliability; however, there are several vulnerabilities that could limit the ability of the system to perform its function. These vulnerabilities include the following:

- Loss of IA to the Main Air Flow Valve or to the dip tubes
- Loss of electrical power or failure of an electrical component
- Failure of the Main Air Flow Valve (solenoid operated pulse chamber isolation valve)
- Failure of the FPT-1 level or dip tube piping

Based on the reasons/discussions stated below, the FPT-1 PTA Liquid Level Interlock is deemed acceptable to meet its SS requirements:

- Loss of IA to the supply valve causes the Main Air Flow Valve to fail closed and loss of IA to the low-level instrument results in a zero level reading which would actuate the liquid level interlock.
- Loss of electrical power or signal to the solenoid will cause the Main Air Flow Valve to shut. A localized loss of power to the level (with all other electrical components remaining energized) causes the system to de-energize, shutting the air supply valve. There is a low probability that an electrical component failure or smart short would preclude this fail-safe interlock from functioning. In addition, non-credited low-level alarms alert the operators, such that corrective action may be taken.
- A dip tube failure, such as breakage or leakage, would result in the liquid level transmitter reading FPT-1 level that is lower than the actual level, actuating the interlock. Periodic loop verifications are performed on the interlock and the other pump tank indications.

4.4.15 F-AREA PUMP TANK-1 PULSE TUBE AGITATOR AIR SUPPLY PRESSURE RELIEF VALVE

4.4.15.1 Safety Function and Functional Requirements

The FPT-1 PTA Air Supply Pressure Relief Valve (PRV) prevents a release of radioactive material to the environment by limiting the jet suction air supply pressure. Limiting the supply air pressure to less than or equal to the maximum PRV setpoint ensures the suction lift generated is limited thus avoiding sucking waste into the jet and discharging it into the PP. The PRV setting (less than or equal to 58 psig) is based on a 14-foot vertical separation between the FPT-1 overflow line and the PTA jet suction location.

The FPT-1 PTA Air Supply PRV is required during normal operations.

The FPT-1 PTA Air Supply PRV is credited as an SS control for the following event:

- Aerosolization Events

4.4.15.2 System Description

There are two FPT-1 PTA Air Supply PRVs installed on the supply line downstream of the Main Air Flow Valve. Both PRVs are functionally classified as SS, with only one PRV required to be operable during system operation. See Figure 4.4-7.

4.4.15.3 System Evaluation

Functionality is assured through the implementation of the NMMP and associated testing/inspection.

The associated section of Table 4.4-2 summarizes the DR evaluation for the FPT-1 PTA Air Supply PRVs. The FPT-1 PTA Air Supply PRVs were initially designed, procured, installed, tested, and maintained as SC equipment (initially had an SC FC). Since the FPT-1 PTA Air Supply PRVs are required to have SS FC, they meet the DRs for an SS SSC.

4.4.16 LDB DRAIN CELL

4.4.16.1 Safety Function and Functional Requirements

The LDB Drain Cell provides passive confinement to mitigate a release of radioactive material to the environment. The LDB Drain Cell structural integrity is required during normal operations, and during and following a Seismic Event. If the LDB Drain Cell structure survives during a Tornado/High Winds Event, the LDB Drain Cell structure provides mitigation for an explosion through passive confinement. The LDB Drain Cell structure is not required to withstand high winds (i.e., the structure is not required to be PC-2 high wind qualified) since loss of confinement prior to the event would prevent the event (i.e., the flammable vapors would not accumulate).

The LDB Drain Cell is credited as an SS control for the following events:

- Transfer Facility Explosions
- Transfer Error/SMP Waste Release
- Tornado/High Winds Event
- Seismic Event

4.4.16.2 System Description

The LDB Drain Cell is a reinforced concrete structure lined with stainless steel, located below grade, into which the LDBs for Tanks 48, 49, 50, and 51 typically drain. The LDB Drain Cell floors are designed to route any in-leakage to a sump and a non-credited conductivity probe. The LDB Drain Cell is vented through a passive vent line containing a HEPA filter. See Figure 4.4-8.

4.4.16.3 System Evaluation

Functionality is assured through the implementation of the Structural Integrity Program and associated testing/inspection.

The associated section of Table 4.4-2 summarizes the DR evaluation for the LDB Drain Cell. The LDB Drain Cell meets the DRs for an SS SSC.

4.4.17 AREA RADIATION MONITORS WITH CONTROL ROOM NOTIFICATION

4.4.17.1 Safety Function and Functional Requirements

ARMs with Control Room Notification provide control room notification (alarm or equivalent control room notification by local personnel) upon the detection of higher than normal radiation levels in areas associated with waste transfers and SMP operation to mitigate a release of radioactive material to the environment. ARMs with Control Room Notification are used to initiate operator actions needed to stop the potential release of radioactive material.

The ARMs with Control Room Notification are credited during High-Rem waste transfers at above ground (or exposed) transfer line locations and during SMP operations. These ARMs are placed in accordance with the ARM Location Program. The ARMs with Control Room Notification are required during normal operations.

ARMs with Control Room Notification are credited as an SS control for the following events:

- Transfer Error/SMP Waste Release
- Aerosolization Events
- Waste Tank Explosion (SMP Column Explosion)

4.4.17.2 System Description

The major SS components comprising the ARM with Control Room Alarm circuit are listed below, and shown in Figure 4.4-9:

- Radiation Detector
- Metering (analog/digital) and Alarm Circuit
- Control Room Alarm (hardwired, fiber optic, or wireless)

Radiation monitoring devices are connected (via hardwire, safety certified PLC, or through wireless communication) to the applicable control room alarm panel or have local alarms (A local alarm with control room notification capability (i.e., operator with a radio) is sufficient.). The ARMs are located in the immediate vicinity of above ground (or exposed) transfer lines, SMPs (during operation), and waste tanks, and provide continuous area radiation monitoring. The ARM is located close enough to the transfer line, waste tank, or the SMP such that it will detect an increase in radiation levels caused by a release of waste to the environment.

The ARMs operate independently of each other, but are either connected to the general alarm system located in the applicable control room or have local alarms. Loss of power to an ARM will cause a failure of the ARM, but the power loss to an installed, permanent ARM will cause a local fail safe indication and an alarm in the associated control room. Loss of communication of a wireless ARM will annunciate in the associated control room alarm. Additionally, the ARM alarm circuits may utilize time delay relays (less than or equal to 60 seconds) to avoid relay chatter associated with electronic noise signals. This time delay period, prior to alarm actuation, is judged to have an insignificant impact on initiating operator actions for the event.

All active and passive components that comprise the sensing and instrumentation circuit are considered SS components. These components include but are not limited to the signal cable, grounding pathway, terminal blocks, cable connectors, sensing relays, time delay relays, alarm relays, alarm bistables, annunciators, and safety PLCs (fiber optic alarm loop). The control room or local alarm must provide both audible and visual indications of the alarm condition.

4.4.17.3 System Evaluation

Functionality is assured through the implementation of applicable SRs, as identified in the TSRs.

ARMs with wireless control room alarms meet ISA 84.01 SIL-1 requirements.

The associated section of Table 4.4-2 summarizes the DR evaluation for the ARMs with Control Room Notification. A general assessment of the applicable DRs is provided below. Subsequent to the initial DR evaluation, additional assessments were performed to evaluate the impact of multiplexing the alarm signal to a central control room using a safety certified PLC. These assessments (Ref. 39, 40, 52) concluded that multiplexing the alarm signal using a safety certified PLC had a negligible impact on the overall system failure probability and the SSCs are deemed acceptable to meet their SS requirements, assuming the requirements of Section 4.4 are met.

DR-3 Functionality

ARMs with Control Room Notification have demonstrated a high degree of reliability to perform their credited function. However, there are vulnerabilities in the system, such as failure during a loss of power, loss of input signal or failure of the sensing relay/circuit. Based on the reasons/discussions stated below, ARMs with Control Room Notification are deemed acceptable to meet their SS requirements:

- The instrument loop periodic testing provides assurance that power is available and that the entire loop, including the applicable panel alarm, is functioning properly when the Functional Tests are accomplished. The likelihood of relay failure or losing power during the period between these surveillances and at the same time having an event that leaks waste from a waste tank or transfer line is highly unlikely.
- Loss of communication of a wireless ARM will annunciate in the associated control room.

4.4.18 INFLUENT MANUAL ISOLATION VALVES

4.4.18.1 Safety Function and Functional Requirements

Influent Manual Isolation Valves provide a means of stopping non-waste additions (e.g., chemical additions, water additions) to waste tanks and pump tanks to mitigate a radioactive material release to the environment from an overflow event. For non-waste additions into waste tanks, the SS functional requirement applies to only those systems that have a sending vessel greater than or equal to 15,000 gallons or are capable of continuous non-waste makeup flow to the waste tanks (e.g., IW System). The term “manual isolation valve” is used to denote a valve that is capable of actuation (closure) by operator action. This operator action may be either local (e.g., turning a handwheel) or remote (e.g., switch actuation of a solenoid valve that fails closed on loss of power).

Influent Manual Isolation Valves are required to be capable of isolating non-waste supplies during normal operations. Systems that use another means for stopping non-waste additions (e.g., Transfer Pump Electrical Breakers/Disconnects – see Section 4.4.1) do not require Influent Manual Isolation Valves. Influent Manual Isolation Valves shall be capable of being fully shut to perform their credited safety function. Removal for repair or replacement requires a seat leak test to verify no more than “minor leak-by” which is defined as a trickle (i.e., thin stream or drops).

Influent Manual Isolation Valves are credited as an SS control for the following event:

- Transfer Error/SMP Waste Release

4.4.18.2 System Description

Influent Manual Isolation Valves provide for isolation of non-waste additions (e.g., chemical additions, water additions) to waste tanks and pump tanks. Pressure boundary leakage (e.g., bonnet or valve stem leakage) from the isolation valve or valve seat/disk wear does not

defeat the safety function. The valves must be capable of being fully shut. Single valve isolation is required to meet the SS control.

4.4.18.3 System Evaluation

Functionality is assured through the implementation of the NMMP to validate these valves can be fully closed.

The associated section of Table 4.4-2 summarizes the DR evaluation for the Influent Manual Isolation Valves. Influent Manual Isolation Valves meet the DRs for an SS SSC.

4.4.19 TYPE IIIA WASTE TANK CHROMATE WATER COOLING COILS (EXCLUDING WASTE TANK 35)

4.4.19.1 Safety Function and Functional Requirements

The Type IIIA Waste Tank Chromate Water (CRW) Cooling Coils (excluding Waste Tank 35) pressure boundary integrity prevents a release of radioactive material to the environment by preventing waste tank siphon or pump-out conditions. CRW Cooling Coil pressure boundary integrity is required during normal operations, and during and following a Seismic Event. No CRW Cooling Coil leakage within the waste tank is permitted.

The pressure boundary of the Type IIIA Waste Tank CRW Cooling Coils (excluding Waste Tank 35) is credited as an SS control for the following events:

- Waste Tank Siphon/Pump-Out
- Seismic Event

4.4.19.2 System Description

Each of the Type IIIA waste tanks (excluding Waste Tank 35) contains Type IIIA CRW Cooling Coils. The design and maintenance of each coil prevents leakage from the waste tank into the coil in the event the CRW system becomes depressurized. The SS boundary for the CRW Cooling Coils is the piping located inside the waste tank.

4.4.19.3 System Evaluation

Functionality is assured through the implementation of the Structural Integrity Program and associated testing/inspection.

The associated section of Table 4.4-2 summarizes the DR evaluation for the Type IIIA Waste Tank CRW Cooling Coils (excluding Waste Tank 35). Type IIIA Waste Tank CRW Cooling Coils meet the DRs for an SS SSC.

4.4.20 WASTE TANK CHROMATE WATER HEADER ISOLATION VALVES

4.4.20.1 Safety Function and Functional Requirements

Waste Tank CRW Header Isolation Valves mitigate a release of radioactive material to the environment by providing a means of stopping a siphon or pump-out of the waste tanks. Waste Tank CRW Header Isolation Valves are required during normal operations for Waste Tanks 13, 14 (when connected to the CRW System), 15 (when connected to the CRW System), 25, 26, 27, 28, 36, 37, 38, 39, 40, 41, 42, 43, 44, 45, 46, 47, 48, 49, 50, and 51; and following a Seismic Event for Waste Tanks 13, 14 (when connected to the CRW System), 15 (when connected to the CRW System), 25, 26, 27, 28, 29, 31, 32, 33, 34, 35, 36, 37, 38, 39, 40, 41, 42, 43, 44, 45, 46, 47, 48, 49, 50, and 51. Waste Tank CRW Header Isolation Valves shall be capable of being fully shut to perform their credited safety function. Removal for repair or replacement requires a seat leak test to verify no more than "minor leak-by" which is defined as a trickle (i.e., thin stream or drops).

Waste Tank CRW Header Isolation Valves are credited as an SS control for the following events:

- Waste Tank Siphon/Pump-Out (Tanks 13, 14, 15, 25, 26, 27, 28, 36, 37, 38, 39, 40, 41, 42, 43, 44, 45, 46, 47, 48, 49, 50, and 51)
- Seismic Event (Tanks 13, 14, 15, 25, 26, 27, 28, 29, 31, 32, 33, 34, 35, 36, 37, 38, 39, 40, 41, 42, 43, 44, 45, 46, 47, 48, 49, 50, and 51)

4.4.20.2 System Description

Waste Tank CRW Header Isolation Valves (supply and return) provide for isolation of the CRW to and from the waste tank CRW systems. Pressure boundary leakage (e.g., bonnet or valve stem leakage) from the isolation valve or valve seat/disk wear does not defeat the safety function. The valves must be capable of being fully shut. Single valve isolation is required to meet the SS control. This control applies to Waste Tanks 13, 14, 15, 25, 26, 27, 28, 29, 31, 32, 33, 34, 35, 36, 37, 38, 39, 40, 41, 42, 43, 44, 45, 46, 47, 48, 49, 50, and 51.

Selection of the isolation valves is based on operator accessibility and operation during post-seismic event conditions.

4.4.20.3 System Evaluation

Functionality is assured through the implementation of the NMMP to validate these valves can be fully closed, and the Structural Integrity Program to validate operator accessibility and operation during post-seismic event conditions.

The associated section of Table 4.4-2 summarizes the DR evaluation for the Waste Tank CRW Header Isolation Valves. Waste Tank CRW Header Isolation Valves meet the DRs for an SS SSC.

4.4.21 DELETED

4.4.22 WASTE TANK 30 CHROMATE WATER COIL ISOLATION VALVES

4.4.22.1 Safety Function and Functional Requirements

Waste Tank 30 CRW Coil Isolation Valves mitigate a release of radioactive material to the environment by providing a means of stopping a siphon or pump-out of Waste Tank 30. Waste Tank 30 CRW Coil Isolation Valves are required during normal operations and following a Seismic Event. Waste Tank CRW Coil Isolation Valves shall be capable of being fully shut to perform their credited safety function. Removal for repair or replacement requires a seat leak test to verify no more than "minor leak-by" which is defined as a trickle (i.e., thin stream or drops).

Waste Tank 30 CRW Coil Isolation Valves are credited as an SS control for the following events:

- Waste Tank Siphon/Pump-Out
- Seismic Event

4.4.22.2 System Description

Waste Tank 30 CRW Coil Isolation Valves (supply and return) provide for isolation of the CRW to and from the Waste Tank 30 CRW cooling coils. Pressure boundary leakage (e.g., bonnet or valve stem leakage) from the isolation valve or valve seat/disk wear does not defeat the safety function. The valves must be capable of being fully shut. Single valve isolation is required to meet the SS control.

Selection of the isolation valves is based on operator accessibility and operation during post-seismic event conditions.

4.4.22.3 System Evaluation

Functionality is assured through the implementation of the NMMP to validate these valves can be fully closed, and the Structural Integrity Program to validate operator accessibility and operation during post-seismic event conditions.

The associated section of Table 4.4-2 summarizes the DR evaluation for the Waste Tank 30 CRW Cooling Coil Isolation Valves. Waste Tank 30 CRW Cooling Coil Isolation Valves meet the DRs for an SS SSC.

4.4.23 WASTE TANKS 29, 31, 32, 33, 34, AND 35 TYPE III CHROMATE WATER COOLING COILS

4.4.23.1 Safety Function and Functional Requirements

Waste Tanks 29, 31, 32, 33, 34, and 35 Type III CRW Cooling Coils prevent a release of radioactive material to the environment by maintaining pressure boundary integrity to prevent waste tank siphon or pump-out conditions. CRW Cooling Coil pressure boundary integrity is required during normal operations. No CRW Cooling Coil leakage within the waste tank is permitted.

Waste Tanks 29, 31, 32, 33, 34, and 35 Type III CRW Cooling Coils are credited as an SS control for the following event:

- Waste Tank Siphon/Pump-Out

4.4.23.2 System Description

There are six waste tanks in the CSTF susceptible to a siphon or pump-out event that contain intact Type III CRW Coiling Coils. The coils are designed and maintained to prevent leakage from the waste tank into the coil in the event the CRW system becomes depressurized at the coil. The SS boundary for the CRW Cooling Coils is the piping located inside the waste tank.

4.4.23.3 System Evaluation

Functionality is assured through the implementation of the Structural Integrity Program and associated testing/inspection.

The associated section of Table 4.4-2 summarizes the DR evaluation for the Waste Tanks 29, 31, 32, 33, 34, and 35 Type III CRW Cooling Coils. Waste Tanks 29, 31, 32, 33, 34, and 35 Type III CRW Cooling Coils meet the DRs for an SS SSC.

4.4.24 TYPE IV WASTE TANKS

4.4.24.1 Safety Function and Functional Requirements

Type IV Waste Tanks provide passive containment of the tank contents to prevent a release of liquid radiological material to the environment and provide passive confinement to mitigate an airborne radiological material release. The tanks also support the operation of the ventilation system. Type IV Waste Tanks structural integrity (tank top only for seismic) is required during normal operations, during an external fire event, during and following a Tornado/High Winds Event, and during and following a Seismic Event. The Type IV Waste Tank structure is considered to be PC-2 high wind qualified by virtue of its underground location. Type IV Waste Tanks are designed or protected from corrosion, external fire and external impacts.

The waste tank riser covers and riser plugs are an integral component of each Waste Tank and are necessary to fulfill the SS confinement function. These riser covers and riser plugs help form the boundary for airborne/aerosolized waste confinement for some events. The functionality of

the riser covers and riser plugs is to remain in place during in-tank activities that have the potential to release airborne/aerosolized waste. For the Waste Tank Explosion event, the waste tank provides an overall gross confinement function and it is recognized that the explosion pressures could dislodge the riser plugs and that unrestrained riser plugs may not remain in place. The internal components of the riser (e.g., core pipes, leak detection) are not required to be SS.

There are many activities that take place in the CSTF that require equipment to be installed through waste tank risers and plugs, in addition to temporary work that requires riser cover and plug removal. Some activities (e.g., liquid/vapor sampling) may have the riser cover/plug removed for the duration of the activity, but these activities are short in duration, typically controlled by procedure or work instruction, and represent a minimal time at risk. Longer duration activities (e.g., camera installed for periodic inspections) with the riser cover/plug removed, require the installation of temporary covers to ensure the safety function of the waste tank is met. Longer duration activities requiring riser cover/plug removal (without installation of temporary covers) are acceptable, provided Engineering determines that the safety function of the waste tank is not compromised by the openings (e.g., ability of the waste tank to provide airborne confinement for aerosolization [in conjunction with active ventilation]).

Type IV Waste Tanks are credited as an SS control for the following events:

- Aerosolization Events
- Waste Tank Explosion
- Waste Tank/Pump Tank Overheating
- Waste Tank Wall Failure
- Tornado/High Winds Event
- Seismic Event
- Wildland Fire
- Loss of Offsite Power

4.4.24.2 <u>System Description</u>

The Type IV Waste Tank SS boundary includes the outer concrete walls, primary tank, risers, penetrations through the primary wall, and the tank top. Type IV Waste Tanks contain no CRW Cooling Coils.

The primary tank walls are constructed of carbon steel. The waste tank structures require tank top loading controls to protect the tank structure against excessive stresses, flammable vapor controls to protect against an internal tank explosion, chemical control for corrosion control, and an inspection program to evaluate continued tank integrity.

4.4.24.3 <u>System Evaluation</u>

Functionality is assured through the implementation of the Structural Integrity Program (and associated testing/inspection) and Corrosion Control Program.

The associated section of Table 4.4-2 summarizes the DR evaluation for the Type IV Waste Tanks. Type IV Waste Tanks meet the DRs for an SS SSC.

4.4.25 TANK 50 AND TYPE IV WASTE TANK PURGE VENTILATION SYSTEMS

4.4.25.1 Safety Function and Functional Requirements

The Tank 50 Purge Ventilation System and Type IV Waste Tank Purge Ventilation Systems provide the following SS functions (as applicable):

- (Type IV Waste Tanks) Provides sufficient purge flow rate through the tank (Rapid Generation Tanks and Slow Generation Tanks) to maintain the tank bulk vapor space less than or equal to 25% of the LFL (accounting for dissolved hydrogen release from steam jetted transfers and radiolytic hydrogen generation). This function will ensure that the tank bulk vapor space is maintained less than or equal to the hydrogen concentration SAV and protect the initial hydrogen concentration to ensure that the minimum time to LFL associated with the waste tank flammability classification is protected.
- (Type IV Waste Tanks) Provides sufficient purge flow rate through the tank (Very Slow Generation Tanks during receipt of a steam jetted transfer), accounting for dissolved hydrogen release, to ensure that the minimum time to LFL associated with the waste tank flammability classification is protected.
- (Tank 50) Provides sufficient purge flow rate through Tank 50 (when classified as a Rapid Generation Tank or Slow Generation Tank) to maintain the hydrogen concentration in the waste tank bulk vapor space to less than or equal to 3.8% of the LFL (accounting for radiolytic hydrogen generation). This function protects the initial hydrogen concentration to ensure that the minimum time to CLFL associated with the waste tank flammability classification is protected.
- (Tank 50 and Type IV Waste Tanks) During free supernate removal activities on Rapid Generation Tanks and Slow Generation Tanks (in conjunction with the Gas Release Program), maintains the minimum time to LFL defined by the waste tank flammability classification (and associated minimum ventilation flow rate requirements).
- (Tank 50 and Type IV Waste Tanks) For spontaneous liberation events and other activities (sludge agitation, bulk saltcake dissolution, and saltcake interstitial liquid removal) on Rapid Generation Tanks and Slow Generation Tanks, minimizes the potential for reaching a flammable vapor concentration by providing a continuous purge of the tank vapor space.
- (Type IV Waste Tanks) For activities (sludge agitation, bulk saltcake dissolution, and saltcake interstitial liquid removal) that exceed the Gas Release Criteria described in Chapter 3 (see Section 3.4.2.11), provides sufficient purge flow rate through the tank (in conjunction with the Gas Release Program) to maintain the waste tank bulk vapor space hydrogen concentration less than or equal to the SAV and maintain the minimum time to LFL defined by the waste tank flammability classification.

Ventilation System Flow Indicators are required for Rapid Generation Tanks (Tank 50 and Type IV Waste Tanks). Additionally for Type IV Waste Tanks, Ventilation System Flow Indicators are required for those tanks undergoing sludge agitation (using waste tank mixing devices), bulk saltcake dissolution, or saltcake interstitial liquid removal activities which exceed the Gas Release Criteria described in Chapter 3 (see Section 3.4.2.11 or Table 3.4-9 for specific applicability requirements). These indicators provide a low flow interlock to stop the gas release activity (see Section 4.3.13). The Ventilation System Flow Indicators are required to provide local indication of waste tank vapor space air flow.

The Tank 50 and Type IV Waste Tank Purge Ventilation Systems also provide an active filtered release path for potential radiological releases from the waste tank vapor space. When not operating, the ventilation system integrity (including outlet HEPA filter) provides airborne confinement of radiological material to minimize a radioactive release to the environment. Ventilation System Flow Indicators are not required to support this SS function.

The Tank 50 and Type IV Waste Tank Purge Ventilation Systems are required during normal operations. Tank 50 and Type IV Waste Tank Purge Ventilation Systems (with Flow Indicators as required and identified in Chapter 3) are credited as an SS control for the following events:

- Aerosolization Events
- Waste Tank Explosion
- Waste Tank/Pump Tank Overheating

4.4.25.2 <u>System Description</u>

The major SS components typically comprising the Tank 50 and Type IV Waste Tank Purge Ventilation Systems are listed below and shown in Figure 4.3-3 (Note that the condenser shown in Figure 4.3-3 does not apply to Type IV Tanks):

- Demister, condenser, steam reheater
- Outlet HEPA filter assemblies
- Exhaust fan/motor
- Exhaust stack
- Manual dampers
- Ventilation ductwork
- Ventilation flow instrumentation

The waste tanks share the same basic ventilation flowpath with minor differences between the systems. The following description is typical for most ventilation systems, but some differences exist from tank to tank. Differences in components and flow paths are acceptable as long as the safety function is met.

The purge airflow is drawn into the tank through an inlet filter or other tank penetrations (e.g., riser covers/plugs, equipment penetrations) by operation of the ventilation system. Since

there are multiple paths for air inflow, the air introduction points to the waste tank are not required to be functionally classified SS. After sweeping the tank vapor space, the air and flammable vapors are removed by the exhaust header. In the exhaust header, the air/vapor mixture passes through a demister, condenser, and steam reheater. From the reheater, the mixture passes through an outlet HEPA filter assembly, manual damper, flow element, and through an exhaust blower/fan through the exhaust fan stack to atmosphere. Some of the Type IV Waste Tank Purge Ventilation Systems are capable of being connected in pairs so that one ventilation system ventilates a pair of tanks. The support systems for the ventilation system components (e.g., flushwater, CRW, steam) and HEPA filter filtration characteristics are not required to support the SS flammable vapor control function of the tank ventilation system. In addition, the inlet HEPA filter and ductwork are not required to support the SS flammable vapor control function of the ventilation system. The SS flammable vapor control function requires the structural integrity of the pressure boundary of the exhaust ventilation system and its components. The structural integrity of the pressure boundary includes internal portions of the system, where necessary, to maintain the flow path boundary of the system (e.g., reheater steam tubes). The stack is SS for structural integrity to prevent a failure (such as crimping) that could cause a loss of tank purge ventilation flow.

The Tank 50 and Type IV Waste Tank Purge Ventilation Systems shall be maintained at least as a Level 4 duct class (per Reference 57) for normal permissible leakage rates. Per Reference 58, the bounding in-leakage rate associated with Level 4 duct class for all waste tank types is 1 scfm. This potential in-leakage rate is extremely small and the minimum ventilation flow rate requirements from Chapters 3 and 5 are derived using various bounding conditions (e.g., tank level, radiolytic hydrogen generation rate, dissolved hydrogen from steam jetted transfers). Additionally, nominal flow rates from waste tank ventilation systems typically exceed minimum ventilation flow rate requirements by a significant amount. Therefore, no adjustment is necessary to flow rate requirements (determined/provided in the DSA/TSR) to account for the Level 4 duct class permissible leakage rates.

The SS airborne confinement boundary for the ventilation system includes all the ventilation ductwork/pipes from the waste tank up to and including the outlet HEPA filter assemblies. This also includes any penetrations into the ductwork/pipes, up to the first sound isolation point of the penetration, and instrumentation isolation valves. HEPA filter filtration characteristics are required to support the integrity function. Outlet HEPA filters are required to be 99.5% efficient to mitigate releases from waste tank Aerosolization Events (this efficiency also bounds requirements for mitigating waste tank overheating events). The support systems for the ventilation system components (e.g., flushwater, CRW, steam) are not required to support the SS function of the Waste Tank Purge Ventilation Systems. Failure of these support systems was evaluated and accepted as not compromising the SS airborne confinement function provided Ventilation System Performance Monitoring is completed. The airborne confinement safety function requires fan operation and the structural integrity of the pressure boundary of the ventilation system and its components. The structural integrity of the pressure boundary includes internal portions of the system, where necessary, to maintain the flow path boundary of the system (e.g., reheater steam tubes).

Ventilation System Performance Monitoring is required when HEPA filtration is credited as a control in an active ventilation system for mitigating an event. HEPA filters are susceptible to plugging and possible breakthrough when subjected to high moisture loading, which would render the filter incapable of performing its intended function. Ventilation System Performance Monitoring ensures that the HEPA filter is operating properly, and capable of performing its credited function.

Ventilation System Performance Monitoring checks the ventilation system periodically to ensure that HEPA filter plugging or breakthrough has not occurred. Monitoring is performed prior to beginning an evolution to establish baseline conditions, and periodically thereafter.

4.4.25.3 System Evaluation

Functionality is assured through the implementation of applicable SRs, as identified in the TSRs, and the Structural Integrity Program and associated testing/inspection.

The associated section of Table 4.4-2 summarizes the DR evaluation for the Tank 50 and Type IV Waste Tank Purge Ventilation Systems. A general assessment of the applicable DRs is provided below.

DR-3 Functionality

The Tank 50 and Type IV Waste Tank Purge Ventilation Systems have vulnerabilities associated with power supply. These vulnerabilities affect the reliability of the system. Based on the reasons/discussions stated below, the Tank 50 and Type IV Waste Tank Purge Ventilation Systems are deemed acceptable to meet their SS requirements:

- The Flammability Control Program provides administrative control of tank contents and operations such that at least seven days would be required following the loss of the ventilation system before the waste tank would reach 100% of the LFL (CLFL for Tank 50).
- TSRs require that the purge ventilation system be checked periodically, which will give operations adequate time to detect the failure and restore the equipment to operability, or to install portable blowers to purge the waste tank while the installed system is being repaired.
- Multiple non-credited (e.g., control room alarms, vacuum/pressure/dP indications) indicators are available to alert the operator to the loss of ventilation and to take corrective action. Based on the multiple indicators of loss of purge flow, the time required to reach 100% of the LFL (CLFL for Tank 50), and the availability of portable backup blowers, it is judged that operations would be able to restore adequate ventilation flow to the waste tank before reaching LFL (CLFL for Tank 50), thereby, preventing an explosion.
- Where a flow indicator is required, surveillances are performed for ventilation flow and flammable vapor concentration. The surveillance frequency is adequate to detect a loss of ventilation flow and take corrective actions within the seven days provided by the Flammability Control Program.

- Loss of power could involve a localized loss of power, such as to an individual substation or motor control center, or could involve complete loss of offsite power. Operating experience at SRS has shown that, historically, complete loss of power events are of short duration. Power is available from other sources (e.g., diesel generators). Power is restored well within the seven days provided by the Flammability Control Program.
- The waste tanks are maintained to ensure at least seven days to reach LFL (CLFL for Tank 50) after loss of ventilation; adequate time exists to restore normal power to the ventilation system, provide power from an alternate source to the installed fan, or to install and operate a portable ventilation system.

4.4.26 WASTE TANK ANNULUS

4.4.26.1 Safety Function and Functional Requirements

The Waste Tank Annulus provides passive confinement of the annulus contents to prevent a release of radiological material to the environment and provide passive confinement to mitigate an airborne radiological material release. The Waste Tank Annulus (excluding Tank 50) also provides liquid containment features to provide support for the operation of the annulus conductivity probes by collecting leaked waste. The Type I and Type II Waste Tank Annulus structure also supports ventilation system operation for Type I/II Acidic Chemical Cleaning Waste Tank. The Waste Tank Annulus structural integrity is required during normal operations, during an external fire event, during and following a Tornado/High Winds Event, and during and following a Seismic Event.

The waste tank annulus riser plugs are an integral component of each Waste Tank Annulus and are necessary to fulfill the SS confinement function. These riser plugs help form the boundary for airborne/aerosolized waste confinement for some events. The functionality of the riser plugs is to remain in place during annulus activities that have the potential to release airborne/aerosolized waste. For the Waste Tank Annulus Explosion event, the waste tank annulus provides an overall gross confinement function and it is recognized that the explosion pressures could dislodge the riser plugs and that unrestrained riser plugs may not remain in place.

There are many activities that take place in the CSTF that require equipment to be installed through waste tank annulus riser plugs, in addition to temporary work that requires plug removal. Some activities (e.g., liquid/vapor sampling) may have the plug removed for the duration of the activity, but these activities are short in duration, typically controlled by procedure or work instruction, and represent a minimal time at risk. Longer duration activities (e.g., camera installed for periodic inspections) with the riser plug removed, require the installation of temporary covers to ensure the safety function of the waste tank annulus is met. Longer duration activities requiring riser plug removal (without installation of temporary covers) are acceptable, provided Engineering determines that the safety function of the waste tank annulus is not compromised by the openings (e.g., ability of the waste tank annulus to provide airborne confinement for aerosolization).

The Waste Tank Annulus is credited as an SS control for the following events:

- Transfer Error/SMP Waste Release
- Aerosolization Events
- Waste Tank Annulus Explosion (Type I/II Acidic Chemical Cleaning Waste Tank only)
- Waste Tank Wall Failure (Type I/II Chemical Cleaning Waste Tank only)
- Waste Tank/Pump Tank Overheating
- Tornado/High Winds Event (Type I/II Acidic Chemical Cleaning Waste Tank only)
- Seismic Event
- Wildland Fire (Type I/II Acidic Chemical Cleaning Waste Tank only)
- Loss of Offsite Power (Type I/II Acidic Chemical Cleaning Waste Tank only)

4.4.26.2 System Description

Type I, II, III, and IIIA Waste Tanks each have an annulus surrounding the primary tank that includes the space between the primary tank shell and the secondary containment. The annulus boundary is included as part of the overall waste tank boundary to include the annulus risers.

The Waste Tank Annulus provides a path, for non-credited ventilation flow around the outside of the primary tank for corrosion and temperature control (ventilation flow is credited for Type I/II Acidic Chemical Cleaning Waste Tank; see Section 4.4.27), and contains level detection instrumentation used to measure/indicate liquid level in the annulus.

4.4.26.3 System Evaluation

Functionality is assured through the implementation of the Structural Integrity Program, Corrosion Control Program, and associated testing/inspection.

The associated section of Table 4.4-2 summarizes the DR evaluation for the Waste Tank Annulus. The Waste Tank Annulus meets the DRs for an SS SSC.

4.4.27 TYPE I, II WASTE TANK ANNULUS VENTILATION SYSTEMS

4.4.27.1 Safety Function and Functional Requirements

The SS function of the Type I, II Waste Tank Annulus Ventilation System (negative pressure) is to maintain the concentration of flammable vapors in the waste tank annulus bulk vapor space to less than or equal to 25% LFL accounting for radiolytic and corrosion induced hydrogen generation on Type I/II Acidic Chemical Cleaning Waste Tanks. Ventilation system flow indicators are not required for this system.

The Type I, II Waste Tank Annulus Ventilation System also provides an active filtered release path for potential radiological releases from the waste tank annulus vapor space on Type I/II

Acidic Chemical Cleaning Waste Tanks. For Type I/II Non-Acidic Chemical Cleaning Waste Tanks, the ventilation system inlet and outlet HEPA filters ensure that airborne releases within the waste tank annulus are mitigated via HEPA filtration when the ventilation system is not operating. The Type I, II Waste Tank Annulus Ventilation System also provides an active elevated release path (via the exhaust stack) to ensure adequate dispersion of potential chemical vapors from the waste tank annulus vapor space on Type I/II Acidic Chemical Cleaning Waste Tanks.

The Type I, II Waste Tank Annulus Ventilation System is required during normal operations. The Type I, II Waste Tank Annulus Ventilation System is credited as an SS control for the following events:

- Waste Tank Annulus Explosion (Type I/II Acidic Chemical Cleaning Waste Tank only)
- Waste Tank Wall Failure (Type I/II Chemical Cleaning Waste Tank only)

4.4.27.2 <u>System Description</u>

The major SS components typically comprising the Type I, II Waste Tank Annulus Ventilation System are listed below and shown in Figure 4.4-22:

- Outlet HEPA filter assembly
- Exhaust fan/motor
- Manual damper
- Ventilation ductwork
- Exhaust stack

The waste tank annuli share the same basic ventilation flowpath with minor differences between the systems. The following description is typical for most annulus ventilation systems, but some differences exist from tank to tank. Differences in components and flow paths are acceptable as long as the safety function is met.

The airflow is drawn into the annulus through an inlet filter or other annulus penetrations (e.g., riser covers/plugs, equipment penetrations) by operation of the ventilation system. Since there are multiple paths for air inflow, the air introduction points to the annulus are not required to be functionally classified SS. After sweeping the annulus vapor space, the air and flammable vapors are removed by the exhaust header. In the exhaust header, the air/vapor mixture passes through an outlet HEPA filter assembly, an exhaust blower/fan, manual damper, and the exhaust fan stack to atmosphere. The stack is SS for structural integrity to prevent a failure (such as crimping) that could cause a loss of annulus ventilation flow. The stack (with adequate height as determined by the Industrial Hygiene Program) is also SS to have an elevated release point to ensure adequate dispersion of chemical vapors.

The Type I, II Waste Tank Annulus Ventilation Systems shall be maintained at least as a Level 4 duct class (per Reference 57) for normal permissible leakage rates. Per Reference 58, the

bounding in-leakage rate associated with Level 4 duct class for all waste tank types (for primary tank ventilation) is 1 scfm. Although Reference 58 did not analyze Type I, II Waste Tank Annulus Ventilation Systems (as these systems are typically installed only on a waste tank that will undergo Acidic Chemical Cleaning), it is reasonable to assume the same potential value of 1 scfm for in-leakage on these systems. This potential in-leakage rate is extremely small and the minimum ventilation flow rate requirements from Chapters 3 and 5 are derived using various bounding conditions (e.g., annulus level, radiolytic hydrogen generation rate, corrosion induced hydrogen generation rate). Additionally, nominal flow rates from waste tank annulus ventilation systems typically exceed minimum ventilation flow rate requirements by a significant amount. Therefore, no adjustment is necessary to flow rate requirements (determined/provided in the DSA/TSR) to account for the Level 4 duct class permissible leakage rates.

The Type I and Type II Waste Tanks also have a non-credited positive pressure annulus ventilation system. This system can provide airflow through an air supply duct to a circular ventilation duct (dehumidification duct) that is positioned around the bottom of the annulus. Since the dehumidification duct for the positive pressure annulus ventilation system is located at the bottom of the annulus, the positive pressure annulus ventilation system may not purge flammable vapors from the annulus if the ventilation ductwork is submerged by waste. Thus, the Type I, II Waste Tank Annulus Ventilation System (negative pressure) is not connected to the dehumidification duct in a manner which prevents accomplishment of the safety functions.

For Type I/II Acidic Chemical Cleaning Waste Tanks, the airborne confinement boundary for the ventilation system includes the outlet HEPA filter and all the ventilation ductwork/pipes from the annulus up to and including the exhaust stack discharge (with adequate height). This also includes any penetrations into the ductwork/pipes, up to the first sound isolation point of the penetration, and instrumentation isolation valves. HEPA filter filtration characteristics are required to support the integrity function. Outlet HEPA filters are required to be 95% efficient to mitigate releases from Waste Tank Wall Failure events. The safety function requires fan operation and the structural integrity of the pressure boundary of the ventilation system and its components.

For Type I/II Non-Acidic Chemical Cleaning Waste Tanks, the airborne confinement boundary for the ventilation system includes all the ventilation ductwork/pipes from the annulus up to and including the outlet HEPA filter assembly. The SS airborne confinement boundary also includes the ventilation ductwork/pipes from the annulus up to and including the inlet HEPA filter assembly. This also includes any penetrations into the ductwork/pipes, up to the first sound isolation point of the penetration, and instrumentation isolation valves. HEPA filter filtration characteristics are required to support the integrity function. Inlet and outlet HEPA filters are required to be 95% efficient to mitigate releases from Waste Tank Wall Failure events. The safety function requires the structural integrity of the pressure boundary of the ventilation system and its components.

Ventilation System Performance Monitoring is required when HEPA filtration is credited as a control in an active ventilation system for mitigating an event. HEPA filters are susceptible to plugging and possible breakthrough when subjected to high moisture loading, which would render the filter incapable of performing its intended function. Ventilation System Performance

Monitoring ensures that the HEPA filter is operating properly, and capable of performing its credited function.

Ventilation System Performance Monitoring checks the ventilation system periodically to ensure that HEPA filter plugging or breakthrough has not occurred. Monitoring is performed prior to beginning an evolution to establish baseline conditions, and periodically thereafter.

4.4.27.3 System Evaluation

Functionality is assured through the implementation of applicable SRs, as identified in the TSRs, and the Structural Integrity Program and associated testing/inspection.

The associated section of Table 4.4-2 summarizes the DR evaluation for the Type I, II Waste Tank Annulus Ventilation System. A general assessment of the applicable DRs is provided below.

DR-3 Functionality

The Type I, II Waste Tank Annulus Ventilation Systems have vulnerabilities associated with power supply. These vulnerabilities affect the reliability of the system. Based on the reasons/discussions stated below, the Type I, II Waste Tank Annulus Ventilation Systems are deemed acceptable to meet their SS requirements:

- TSRs require that the annulus ventilation system be checked periodically, which will give operations adequate time to detect the failure and restore the equipment to operability, or to install portable blowers to purge the waste tank annulus while the installed system is being repaired.
- The surveillance frequency for monitoring annulus ventilation is adequate to detect a loss of ventilation flow and take corrective actions before reaching LFL.
- Loss of power could involve a localized loss of power, such as to an individual substation or motor control center, or could involve complete loss of offsite power. Operating experience at SRS has shown that, historically, complete loss of power events are of short duration. Power is available from other sources (e.g., diesel generators, portable generators).
- The annulus has five days to reach LFL after loss of ventilation (at the residual waste volume); adequate time exists to restore normal power to the ventilation system, provide power from an alternate source to the installed fan, or to install and operate a portable ventilation system.

4.4.28 TYPE I, II, III, IIIA WASTE TANK ANNULUS CONDUCTIVITY PROBES AND HIGH LEVEL ALARMS

4.4.28.1 Safety Function and Functional Requirements

The SS function of the Type I, II, III, IIIA, excluding Tank 50, Waste Tank Annulus Conductivity Probes and High Level Alarms provide a control room alarm, upon the detection of

a liquid waste level greater than the residual waste volume given in Chapter 3 (see Table 3.4-3). The Annulus High Level Alarm is used to initiate operator actions to mitigate the event and limit the quantity of radiological material in the annulus.

Annulus Conductivity Probes and High Level Alarms are required during normal operations for the following:

- Type I, II, III, IIIA Waste Tank Annuli that are being monitored for residual waste volume initial condition protection.
- Type III/IIIA Waste Tank Annuli that are in the transfer path for High-Rem transfers, excluding Tank 50.
- Type I/II Waste Tank Annuli for Type I/II Acidic Chemical Cleaning Waste Tank.

Type I, II, III, IIIA Waste Tank Annulus Conductivity Probes and High Level Alarms are credited with protecting the initial condition (residual waste volume in the waste tank annulus) for the following events:

- Waste Tank Annulus Explosion
- Tornado/High Winds Event (Type I/II Acidic Chemical Cleaning Waste Tank only)
- Seismic Event (Type I/II Acidic Chemical Cleaning Waste Tank only)
- Wildland Fire (Type I/II Acidic Chemical Cleaning Waste Tank only)
- Loss of Offsite Power (Type I/II Acidic Chemical Cleaning Waste Tank only)

The Type I/II Waste Tank Annulus Conductivity Probes and High Level Alarms are credited as an SS control for Waste Tank Annulus Explosion in a Type I/II Acidic Chemical Cleaning Waste Tank.

The Type III/IIIA, excluding Tank 50, Waste Tank Annulus Conductivity Probes and High Level Alarms are credited as an SS control during High-Rem waste transfers for Transfer Error/SMP Waste Release (Waste Tank Annulus Spill due to Core Pipe Failure).

4.4.28.2 <u>System Description</u>

There are three annulus conductivity probes positioned in the outer annuli for Type III/IIIA Waste Tanks (Waste Tanks 25, 26, 27, 28, 29, 30, 31, 32, 33, 34, 35, 36, 37, 38, 39, 40, 41, 42, 43, 44, 45, 46, 47, 48, 49, and 51). Waste Tanks 40, 41, and 42 have only one annulus conductivity probe that is connected (via hardwire or safety certified PLC [Figure 4.4-20]) to the applicable control room alarm panel. The Type IIIA Waste Tank center annulus conductivity probe is not credited as SS required equipment. Type I/II Waste Tanks have only an outer annulus, which contains two annulus conductivity probes.

The major SS components of the Type I, II, III, IIIA Waste Tank Annulus Conductivity Probes and High Level Alarms include a stainless steel sensing probe, aircraft cable/wiring, level sensing relay, and control room panel alarm/annunciator. Power supplies to the sensing circuit and annunciator, and the functional test switch are not within the SS boundary. See Figure 4.3-2.

Additionally, the Type I, II, III, IIIA Waste Tank Annulus Conductivity Probe and High Level Alarm circuits may utilize time delay relays (less than or equal to 60 seconds) to avoid relay chatter associated with electronic noise signals. This time delay period, prior to alarm actuation, is judged to have an insignificant impact on initiating operator actions for the event.

All active and passive components that comprise the sensing and instrumentation circuit are considered SS components. These components include but are not limited to the signal cable, grounding pathway, terminal blocks, cable connectors, sensing relays, time delay relays, alarm relays, alarm bistables, annunciators, and safety PLCs (fiber optic alarm loop). The control room alarm must provide both audible and visual indications of the alarm condition.

4.4.28.3 System Evaluation

Functionality is assured through the implementation of applicable SRs, as identified in the TSRs.

The associated section of Table 4.4-2 summarizes the DR evaluation for the Type I, II, III, IIIA Waste Tank Annulus Conductivity Probes and High Level Alarms. Though the DR evaluation was performed specifically for Type III/IIIA Waste Tanks, the design elements utilized in the evaluation are also present for Type I/II Waste Tanks. The evaluation can therefore be applied to Type I/II Waste Tanks. A general assessment of the applicable DRs is provided below. Subsequent to the initial DR evaluation (Ref. 22), additional assessments were performed to evaluate the impact of multiplexing the alarm signal to a central control room using a safety certified PLC. These assessments (Ref. 39, 40, 52) concluded that multiplexing the alarm signal using a safety certified PLC had a negligible impact on the overall system failure probability and the SSCs are deemed acceptable to meet their SS requirements, assuming the requirements of Section 4.4 are met.

DR-3 Functionality

Type I, II, III, IIIA Waste Tank Annulus Conductivity Probes and High Level Alarms have demonstrated a high degree of reliability to perform their credited function. However, there are vulnerabilities in the system, such as failure during a loss of power, loss of input signal or failure of the level sensing relay/circuit. Based on the reasons/discussions stated below, Type I, II, III, IIIA Waste Tank Annulus Conductivity Probes and High Level Alarms are deemed acceptable to meet their SS requirements:

- The instrument loop periodic testing provides assurance that power is available and that the entire loop including the applicable panel alarm, is functioning properly when the tests are accomplished. The likelihood of relay failure or losing power during the period between these surveillances and at the same time having an event that leaks waste into a tank annulus is highly unlikely.
- A total loss of power resulting in a loss of lighting, multiple indications, and loss of control room instruments will be obvious to operators such that corrective action may be taken. Only a loss of power or electrical signal to a very selective circuit(s) might go undetected.

- A failure of the level sensing relay/control room alarm could result from sticking contacts, an electrical short, or loss of the electrical circuit. Because each annulus has multiple instruments, it is considered unlikely that the instruments would all fail at the same time that an annulus leak occurs. Several annulus conductivity probes do share control room alarm modules, however the periodic functional verifications of the instrument loop would detect a failed alarm module.

4.4.29 WASTE TANK TRANSFER PUMP/JET/SMP RISERS

4.4.29.1 Safety Function and Functional Requirements

Waste Tank Transfer Pump/Jet/SMP Risers mitigate the release of radiological material to the environment by providing airborne waste confinement following a primary containment waste release into the riser, and also provide containment of liquid waste by channeling the liquid waste to the riser leak detection system or drain path following a leak inside the riser. Waste Tank Transfer Pump/Jet Riser integrity is required during normal operations. SMP Riser integrity is required during normal operations and during and following a Seismic Event.

Some Waste Tank Transfer Pump/Jet/SMP Risers have drains that prevent a radioactive material release to the environment by preventing the accumulation of liquid waste in the riser by providing a drain path to the associated waste tank. Waste Tank Transfer Pump/Jet Riser Drains are required in those risers that contain liquid waste lines but do not have a credited level detection system. Waste Tank Transfer Pump/Jet Riser Drains are required to continuously drain the risers during High-Rem waste transfers. SMP Riser Drains are required in those risers that contain SMPs, but do not have a credited leak detection system with interlock.

Waste Tank Transfer Pump/Jet Risers (and drains where applicable) are credited as an SS control for the following event:

- Transfer Error/SMP Waste Release

SMP Risers (and drains where applicable) are credited as an SS control for the following events:

- Transfer Error/SMP Waste Release
- Seismic Event

4.4.29.2 System Description

Multiple risers on each tank provide access to the tank interiors. Risers that contain lines that are used to transport liquid waste into or out of the tank are required to have either a credited drain path back to the tank or a credited liquid leak detection system with an associated control room alarm (see Section 4.4.30). Risers that contain an SMP are required to have either a credited drain path back to the tank or a credited liquid leak detection system with interlock to shutdown the SMP (see Section 4.4.42).

4.4.29.3 System Evaluation

Functionality is assured through the implementation of the Structural Integrity Program and associated testing/inspection.

The associated section of Table 4.4-2 summarizes the DR evaluation for the Waste Tank Transfer Pump/Jet/SMP Risers. Waste Tank Transfer Pump/Jet/SMP Risers meet the DRs for an SS SSC.

4.4.30 WASTE TANK TRANSFER PUMP/JET RISER CONDUCTIVITY PROBES AND HIGH LEVEL ALARMS

4.4.30.1 Safety Function and Functional Requirements

Waste Tank Transfer Pump/Jet Riser Conductivity Probes and High Level Alarms provide a control room alarm upon the indication of liquid waste for those risers that contain liquid waste lines and do not have credited drains to mitigate a release of radioactive material to the environment. Waste Tank Transfer Pump/Jet Riser Conductivity Probes and High Level Alarms are used to initiate operator actions to limit the amount of waste in the riser to prevent an overflow of the riser.

Waste Tank Transfer Pump/Jet Risers, that do not continuously drain, that are in the transfer path of High-Rem transfers require conductivity probes with high level alarm. Waste Tank Transfer Pump/Jet Riser Conductivity Probes and High Level Alarms are required during normal operations.

Waste Tank Transfer Pump/Jet Riser Conductivity Probes and High Level Alarms are credited as an SS control for the following event:

- Transfer Error/SMP Waste Release

4.4.30.2 System Description

The major components of each Waste Tank Transfer Pump/Jet Riser Conductivity Probe and High Level Alarm includes a stainless steel sensing probe, aircraft cable/wiring, level sensing relay, and control room panel alarm/annunciator. In addition, some systems utilize a safety certified PLC to relay the alarm signal from a local control room to a central control room (Figure 4.4-20). Power supplies to the sensing circuit and annunciator, and the functional test switch are not within the SS boundary. See Figure 4.3-2. Additionally, the Waste Tank Transfer Pump/Jet Riser Conductivity Probe and High Level Alarm circuits may utilize time delay relays (less than or equal to 60 seconds) to avoid relay chatter associated with electronic noise signals. This time delay period, prior to alarm actuation, is judged to have an insignificant impact on initiating operator actions for the event.

All active and passive components that comprise the sensing and instrumentation circuit are considered SS components. These components include but are not limited to the signal cable, grounding pathway, terminal blocks, cable connectors, sensing relays, time delay relays, alarm

relays, alarm bistables, annunciators, and safety PLCs (fiber optic alarm loop). The control room alarm must provide both audible and visual indications of the alarm condition.

4.4.30.3 System Evaluation

Functionality is assured through the implementation of applicable SRs, as identified in the TSRs.

The associated section of Table 4.4-2 summarizes the DR evaluation for the Waste Tank Transfer Pump/Jet Riser Conductivity Probes and High Level Alarms. A general assessment of the applicable DRs is provided below. Subsequent to the initial DR evaluation (Ref. 15), additional assessments were performed to evaluate the impact of multiplexing the alarm signal to a central control room using a safety certified PLC. These assessments (Ref. 39, 40, 52) concluded that multiplexing the alarm signal using a safety certified PLC had a negligible impact on the overall system failure probability and the SSCs are deemed acceptable to meet their SS requirements, assuming the requirements of Section 4.4 are met.

DR-3 Functionality

Waste Tank Transfer Pump/Jet Riser Conductivity Probes and High Level Alarms have demonstrated a high degree of reliability to perform their credited function. However, there are vulnerabilities in the system, such as failure during a loss of power, loss of input signal or failure of the level sensing relay/circuit. Based on the reasons/discussions stated below, Waste Tank Transfer Pump/Jet Riser Conductivity Probes and High Level Alarms are deemed acceptable to meet their SS requirements:

- The instrument loop periodic testing provides assurance that power is available and that the entire loop including the applicable panel alarm, is functioning properly when the tests are accomplished. The likelihood of relay failure or losing power during the period between these surveillances and at the same time having an event that leaks waste into a riser is highly unlikely.
- A total loss of power resulting in a loss of lighting, multiple indications, and loss of control room instruments will be obvious to operators such that corrective action may be taken. Only a loss of power or electrical signal to a very selective circuit(s) might go undetected.
- In cases where a Waste Tank Transfer Pump/Jet Riser contains an accumulation of liquid waste (not actually contacting the probe) or high humidity, the level sensing relays have demonstrated contact chatter and early failure. With the exception of this vulnerability, these instruments have demonstrated a high degree of reliability to perform its credited function. This vulnerability is judged acceptable because requirements specify that conductivity probe instrument loops be periodically tested by continuity verification. This test demonstrates the operability of all active and passive components of the instrument, with the exception of a limited portion of the common return path encompassing the riser grounding scheme. Additionally it verifies that power to the applicable monitored alarm panel and sensing circuits is available.

4.4.31 TANK 50 AND TYPE IV WASTE TANK HIGH LIQUID LEVEL CONDUCTIVITY PROBES AND ALARMS

4.4.31.1 Safety Function and Functional Requirements

The SS function of the Tank 50 and Type IV Waste Tank HLLCPs is to provide a control room alarm for a high level condition in a waste tank so that operations can prevent the release of radiological material to the environment from an overflow condition and maintain flammability control in the Tank 50 and Type IV Waste Tank vapor spaces. The Tank 50 and Type IV Waste Tank HLLCPs also protect initial conditions (fill limits) for tank wall exposed area.

Tank 50 and Type IV Waste Tank HLLCP alarms are used to initiate operator actions needed to limit the amount of waste in a waste tank. Tank 50 and Type IV Waste Tank HLLCPs and Alarms are required during normal operations.

Tank 50 and Type IV Waste Tank HLLCPs and Alarms are credited as an SS control for the following events:

- Transfer Error/SMP Waste Release
- Aerosolization Events
- Waste Tank Explosion
- Waste Tank Annulus Explosion (Tank 50 only)
- Waste Tank/Pump Tank Overheating
- Waste Tank Wall Failure (Tank 50 only)
- Tornado/High Winds Event
- Seismic Event
- Wildland Fire
- Loss of Offsite Power

4.4.31.2 System Description

The major SS components comprising the Tank 50 and Type IV Waste Tank HLLCPs and Alarms consist of a stainless steel sensing probe, aircraft cable/wiring, level sensing relay, and control room panel alarm/annunciator. In addition, some systems utilize a safety certified PLC to relay the alarm signal from a local control room to a central control room (Figure 4.4-20). Power supplies to the sensing circuit and annunciator, and the functional test switch are not within the SS boundary. Additionally, the Tank 50 and Type IV Waste Tank HLLCP and Alarm circuits may utilize time delay relays (less than or equal to 60 seconds) to avoid relay chatter associated with electronic noise signals. This time delay period, prior to alarm actuation, is judged to have an insignificant impact on initiating operator actions for the event.

All active and passive components that comprise the sensing and instrumentation circuit are considered SS components. These components include but are not limited to the signal cable,

grounding pathway, terminal blocks, cable connectors, sensing relays, time delay relays, alarm relays, alarm bistables, annunciators, and safety PLCs (fiber optic alarm loop). The control room alarm must provide both audible and visual indications of the alarm condition.

4.4.31.3 System Evaluation

Functionality is assured through the implementation of applicable SRs, as identified in the TSRs.

The associated section of Table 4.4-2 summarizes the DR evaluation for the Tank 50 and Type IV Waste Tank HLLCPs and Alarms. A general assessment of the applicable DRs is provided below. Subsequent to the initial DR evaluation (Ref. 13), additional assessments were performed to evaluate the impact of multiplexing the HLLCP alarm signal to a central control room using a safety certified PLC. These assessments (Ref. 39, 40, 52) concluded that multiplexing the HLLCP alarm signal using a safety certified PLC had a negligible impact on the overall system failure probability and the SSCs are deemed acceptable to meet their SS requirements, assuming the requirements of Section 4.4 are met.

DR-3 Functionality

Tank 50 and Type IV Waste Tank HLLCPs and Alarms have demonstrated a high degree of reliability to perform their credited function. However, there are vulnerabilities in the system, such as failure during a loss of power, loss of input signal or failure of the level sensing relay/circuit. Based on the reasons/discussions stated below, Tank 50 and Type IV Waste Tank HLLCPs and Alarms are deemed acceptable to meet their SS requirements:

- The instrument loop periodic testing provides assurance that power is available and that the entire loop including the applicable panel alarm, is functioning properly when the tests are accomplished. The likelihood of relay failure or losing power during the period between these surveillances and at the same time having an event that raises the level to above the fill limit is highly unlikely.
- A total loss of power resulting in a loss of lighting, multiple indications, and loss of control room instruments will be obvious to operators such that corrective action may be taken. Only a loss of power or electrical signal to a very selective circuit(s) might go undetected.
- Additional level indication is provided by non-credited reel tapes, radar, or steel measuring tapes.

4.4.32 WASTE TANK HYDROGEN MONITOR AND HIGH HYDROGEN CONCENTRATION INTERLOCK

4.4.32.1 Safety Function and Functional Requirements

The installed Waste Tank Hydrogen Monitor and High Hydrogen Concentration Interlock provides for continuous hydrogen monitoring of the waste tank bulk vapor space to protect the hydrogen concentration SAV defined by the Flammability Control Program.

Depending on the activity being performed, the High Hydrogen Concentration Interlock will perform the following when high hydrogen concentration or failure of instrument loop control power occurs:

- stop waste tank mixing devices (tanks undergoing sludge agitation or bulk saltcake dissolution using waste tank mixing devices)
- stop transfer pumps associated with waste tank recirculation (tanks undergoing bulk saltcake dissolution using transfer pumps associated with waste tank recirculation)
- close the dissolution liquid addition valves (tanks undergoing bulk saltcake dissolution)
- stop transfer pumps associated with saltcake interstitial liquid removal (tanks undergoing saltcake interstitial liquid removal)

The Low Sample Flow Indicator provides indication of inadequate sample flowrate and possible low air supply pressure to the sample aspirator. Indication of low sample flow initiates operator actions to restore operability of the Waste Tank Hydrogen Monitor and stop other activities to limit the buildup of flammable vapor in the tank vapor space.

The Waste Tank Hydrogen Monitor and High Hydrogen Concentration Interlock is required for tanks undergoing sludge agitation (using waste tank mixing devices), bulk saltcake dissolution, or saltcake interstitial liquid removal activities which exceed the Gas Release Criteria described in Chapter 3 (see Section 3.4.2.11 or Table 3.4-9 for specific applicability requirements). The Waste Tank Hydrogen Monitor and High Hydrogen Concentration Interlock are required during normal operations, and during and following a Seismic Event.

The Waste Tank Hydrogen Monitor and High Hydrogen Concentration Interlock are credited as an SS control for the following events:

- Waste Tank Explosion
- Seismic Event

4.4.32.2 <u>System Description</u>

The major SS components comprising the installed Waste Tank Hydrogen Monitor with High Hydrogen Concentration Interlock and Sample Flow Indicator are listed below and shown in Figure 4.4-11 (no DCS components are included in the SS system boundary).

- Combustible Gas Detector
- Controller Unit
- Gas Sampling System
- Interlock

Facility IA is passed through an aspirator to create the vacuum that pulls the vapor space sample through the combustible gas detector. The sample flow indicators (rotameters) are relied upon to

maintain the sample flow within the limits needed to maintain accurate flammable vapor concentration readings. The sample flow indicators provide indication of insufficient sample flow, possibly caused by pluggage of the sample line or low IA supply pressure.

The High Hydrogen Concentration Interlock function is actuated when a high flammable gas concentration signal is received on the hydrogen monitor. Upon interlock actuation, the interlock system trips waste tank mixing device electrical breakers, trips transfer pump electrical breakers (associated with waste tank recirculation or saltcake interstitial liquid removal), and closes dissolution liquid addition valves (as applicable). The interlock is also actuated on a loss of interlock instrument loop control power. If the interlocks are located within a structure, the structure is required to be PC-2 seismically qualified. Additionally, the High Hydrogen Concentration Interlock circuits may utilize time delay relays (less than or equal to 15 seconds) to avoid relay chatter associated with electronic noise signals. This time delay period, prior to interlock actuation, is judged to have an insignificant impact on the waste tank's bulk vapor space flammable vapor concentration given the long time to LFL and the multiple requirements involved with the control set for a Waste Tank Explosion (e.g., Gas Release Program, Waste Tank Ventilation with Low Flow Interlock).

All active and passive components that comprise the credited sensing, instrumentation, and control circuit are considered SS components. These components include, but are not limited to, the instrument tubing, instrument isolation valves, signal cable, grounding pathway, terminal blocks, cable connectors, sensing relays, and time delay relays. Although not required by the safety analysis, the hydrogen concentration local indication is within the SS system boundary in order to perform loop checks of the Waste Tank Hydrogen Monitor and due to its integral location within the instrument controller.

4.4.32.3 System Evaluation

Functionality is assured through the implementation of applicable SRs, as identified in the TSRs.

The Waste Tank Hydrogen Monitor and High Hydrogen Concentration Interlock function must operate at a SIL-1 reliability.

The associated section of Table 4.4-2 summarizes the DR evaluation for the Waste Tank Hydrogen Monitor and High Hydrogen Concentration Interlock. A general assessment of the applicable DRs is provided below.

The Waste Tank Hydrogen Monitor and High Hydrogen Concentration Interlock are designed, procured, installed, tested, and maintained as SS equipment.

DR-2 Equipment Environment Consideration

The Waste Tank Hydrogen Monitor and High Hydrogen Concentration Interlock, and Sample Flow Indicator has some components and subassemblies that are susceptible to degradation or failure as a result of the harsh chemical and/or radiological environment. Based on the reason/discussion stated below, the monitor functions are deemed acceptable to meet their SS requirements:

- Periodic Instrument Loop Checks and Instrument Loop Calibrations for the installed hydrogen instrumentation are performed.

DR-4 Test Requirements

The Waste Tank Hydrogen Monitor and High Hydrogen Concentration Interlock, and Sample Flow Indicator are not capable of testing all of the installed components (i.e., the sample tubing between the waste tank vapor space and sample line isolation valve). Based on the reason/discussion stated below, the installed monitor functions are deemed acceptable to meet their SS requirements:

- Periodic testing and inspection of the sample tubing/valves between the tank and the hydrogen monitor capable of identifying sample line leakage is performed.

4.4.33 H-AREA CATCH TANK AND CATCH TANK ENCASEMENT

4.4.33.1 Safety Function and Functional Requirements

The H-Area Catch Tank and Catch Tank Encasement provide passive containment (confinement for encasement) of tank contents to minimize the potential for a release of radioactive material to the environment. The H-Area Catch Tank and Catch Tank Encasement integrity is required during normal operations, and during and following a Seismic Event. For a Seismic Event, Catch Tank Encasement structural integrity is required to ensure Catch Tank integrity. If the H-Area Catch Tank Encasement structure survives during a Tornado/High Winds Event, the H-Area Catch Tank Encasement structure provides mitigation for an explosion through passive confinement. The H-Area Catch Tank Encasement structure is not required to withstand high winds (i.e., the structure is not required to be PC-2 high wind qualified) since loss of confinement prior to the event would prevent the event (i.e., the flammable vapors would not accumulate).

The H-Area Catch Tank and Catch Tank Encasement are credited as an SS control for the following events:

- Transfer Facility Explosions (Catch Tank Encasement)
- Transfer Error/SMP Waste Release (Catch Tank)
- Tornado/High Winds Event (Catch Tank Encasement)
- Seismic Event (Catch Tank and Catch Tank Encasement)

4.4.33.2 System Description

The H-Area Catch Tank is an 11,700-gallon stainless steel tank used to collect the drains from the Transfer Line Encasements. The Catch Tank and Transfer Line Encasements (see Section 4.4.3 for a description of the Transfer Line Encasements) draining to the Catch Tank together are considered a large box with greater than a 15,000-gallon capacity. The Catch Tank is located inside a Catch Tank Encasement and both are located below grade with approximately 20 feet of ground cover. The Catch Tank is vented through a passive vent line containing a HEPA filter. See Figure 4.4-12.

4.4.33.3 System Evaluation

Functionality is assured through the implementation of the Structural Integrity Program and associated testing/inspection.

The associated section of Table 4.4-2 summarizes the DR evaluation for the H-Area Catch Tank and Catch Tank Encasement. The H-Area Catch Tank and Catch Tank Encasement meet the DRs for an SS SSC.

4.4.34 DELETED

4.4.35 242-16H AND 242-25H EVAPORATOR STEAM TUBE BUNDLES

4.4.35.1 Safety Function and Functional Requirements

The 242-16H and 242-25H Evaporator Steam Tube Bundles provide passive containment of steam and air to prevent leakage from the tube bundle. To provide boundary integrity the tube bundles shall have no measurable leaks. The 242-16H and 242-25H Evaporator Steam Tube Bundles are constructed of corrosion resistant material. Evaporator Steam Tube Bundle boundary integrity is required during normal operations, and during and following a Seismic Event. Evaluation (Ref. 27, 34, 35) has shown that the 242-16H Evaporator Steam Tube Bundle is not significantly affected (no loss of safety function) during and following a Seismic Event. Although not a functional requirement, 242-16H Evaporator tube bundle leakage is assumed to be the maximum amount associated with a 0.6 inch x 0.0415 inch crack size for post-seismic. The 242-25H Evaporator Steam Tube Bundle was seismically designed and installed.

The 242-16H and 242-25H Evaporator Steam Tube Bundles are credited as an SS control for the following events:

- Evaporator Overpressure
- Seismic Event

4.4.35.2 System Description

The 242-16H and 242-25H Evaporator Steam Tube Bundles are located in the mid section of the evaporator and concentrate waste by heating the waste to its boiling point and driving off relatively uncontaminated water. See Figure 4.4-13.

4.4.35.3 System Evaluation

Functionality is assured through the implementation of the Structural Integrity Program and associated testing/inspection.

The associated section of Table 4.4-2 summarizes the DR evaluation for the 242-16H and 242-25H Evaporator Steam Tube Bundles. The 242-16H and 242-25H Evaporator Steam Tube Bundles meet the DRs for an SS SSC.

4.4.36 242-16H AND 242-25H EVAPORATOR LANCE AIR SUPPLY LINE ORIFICES

4.4.36.1 Safety Function and Functional Requirements

The 242-16H and 242-25H Evaporator Lance Air Supply Line Orifices mitigate an evaporator over pressurization condition and the subsequent release of a radiological material leak to the environment by limiting the maximum air supply pressure and flow rate to the evaporator lance. The Lance Air Supply Line Orifices are required to be no larger than the diameters assumed in the safety analysis (i.e., 0.09 inches for 242-16H during operation, 0.3 inches for 242-16H during chemical cleaning, and 0.15 inches for 242-25H), such that air flow is within the analysis assumption following a crack of the evaporator steam tube bundle.

The Evaporator Lance Air Supply Line Orifices for the 242-16H and 242-25H Evaporators are required during normal operations. The 242-16H and 242-25H Lance Air Supply Line Orifices are credited with protecting the initial conditions (restricted flow and pressure to the lance) assumed for a Seismic Event.

The 242-16H and 242-25H Evaporator Lance Air Supply Line Orifices are credited as an SS control for the following events:

- Evaporator Overpressure
- Seismic Event

4.4.36.2 System Description

The Evaporator air supply pressure and flowrate is limited by the use of orifices in the air supplied to the lance lines. Airflow to the evaporator lance lines is controlled by the installation of an orifice in the main supply lines and an orifice installed in the air bypass lines. See Figure 4.4-14.

4.4.36.3 System Evaluation

Functionality is assured through the implementation of the NMMP and associated testing/inspection.

The associated section of Table 4.4-2 summarizes the DR evaluation for the 242-16H and 242-25H Evaporator Lance Air Supply Line Orifices. The 242-16H and 242-25H Evaporator Air Supply Line Orifices meet the DRs for an SS SSC.

4.4.37 242-16H AND 242-25H EVAPORATOR LANCE STEAM SUPPLY LINE ORIFICES

4.4.37.1 Safety Function and Functional Requirements

The 242-16H and 242-25H Evaporator Lance Steam Supply Line Orifices mitigate an evaporator over pressurization condition and the subsequent release of a radiological material leak to the environment by limiting the maximum steam supply pressure and flow rate to the evaporator lance. The Lance Steam Supply Line Orifices are required to be no larger than the diameters assumed in the safety analysis (i.e., 0.43 inches for 242-16H and 1.086 inches for 242-25H), such that steam flow is within the analysis assumption following a crack of the evaporator steam tube bundle.

The 242-16H and 242-25H Evaporator Lance Steam Supply Line Orifices are required during normal operations. The 242-16H and 242-25H Lance Steam Supply Line Orifices are credited with protecting the initial conditions (restricted flow and pressure to the lance) assumed for a Seismic Event.

The 242-16H and 242-25H Evaporator Lance Steam Supply Line Orifices are credited as an SS control for the following events:

- Evaporator Overpressure
- Seismic Event

4.4.37.2 System Description

The 242-16H Evaporator steam supply pressure and flowrate to the lance line are limited by the use of an orifice located upstream of the lance gang valve assembly. See Figure 4.4-15.

The 242-25H Evaporator steam supply pressure and flowrate to the lance line are limited by the use of an orifice located downstream of the lance gang valve assembly. See Figure 4.4-16.

4.4.37.3 System Evaluation

Functionality is assured through the implementation of the NMMP and associated testing/inspection.

The associated section of Table 4.4-2 summarizes the DR evaluation for the 242-16H and 242-25H Evaporator Lance Steam Supply Line Orifices. The 242-16H and 242-25H Evaporator Lance Steam Supply Line Orifices meet the DRs for an SS SSC.

4.4.38 242-16H EVAPORATOR TUBE BUNDLE STEAM PRESSURE CONTROL VALVE AND TUBE BUNDLE STEAM PRESSURE RELIEF VALVE

4.4.38.1 Safety Function and Functional Requirements

The 242-16H Evaporator Tube Bundle Steam Pressure Control Valve (PCV) and Tube Bundle Steam PRV mitigate an evaporator over pressurization condition and a subsequent radiological

material release to the environment by limiting the maximum steam supply pressure and flow rate to the evaporator tube bundle and lance. Limiting the steam supply pressure to less than or equal to the maximum 242-16H Evaporator Tube Bundle Steam PCV and Tube Bundle Steam PRV setpoint of 150 psig and 170 psig ensures the steam pressure at the tube bundle and lance is less than or equal to the SAV (i.e., 150 psig and 170 psig). The 242-16H Evaporator Tube Bundle Steam PCV and Tube Bundle Steam PRV settings are based on a pressure drop resulting from the assumed piping configuration from the 242-16H Evaporator Tube Bundle Steam PCV to the 242-16H Evaporator Tube Bundle (Ref. 56).

The 242-16H Evaporator Tube Bundle Steam PCV is required during normal operations, and during and following a Seismic Event. The 242-16H Evaporator Tube Bundle Steam PRV is required during and following a Seismic Event.

The 242-16H Evaporator Tube Bundle Steam PCV and Tube Bundle Steam PRV are credited as an SS control for the following events:

- Evaporator Overpressure (242-16H Evaporator Tube Bundle Steam PCV only)
- Seismic Event

4.4.38.2 System Description

The 242-16H Evaporator utilizes site supplied high-pressure steam and, with the use of a steam PCV, reduces the high-pressure steam prior to use in the evaporator. Downstream of the PCV there is a steam PRV.

The 242-16H Evaporator PCV has a bypass line containing one manually operated bypass valve that must be administratively controlled closed during evaporator operation. See Figure 4.4-15.

4.4.38.3 System Evaluation

Functionality is assured through the implementation of the NMMP and associated testing/inspection.

The associated section of Table 4.4-2 summarizes the DR evaluation for the 242-16H Evaporator Tube Bundle Steam PCV and Tube Bundle Steam PRV. The 242-16H Evaporator Tube Bundle Steam PCV and Tube Bundle Steam PRV meet the DRs for an SS SSC.

4.4.39 242-25H EVAPORATOR LANCE STEAM PRESSURE CONTROL VALVE AND LANCE STEAM PRESSURE RELIEF VALVE

4.4.39.1 Safety Function and Functional Requirements

The 242-25H Evaporator Lance Steam PCV and Lance Steam PRV mitigate an evaporator over pressurization condition and a subsequent radiological material release to the environment by limiting the maximum steam supply pressure and flow rate to the evaporator lance. Limiting the steam supply pressure to less than or equal to the maximum 242-25H Evaporator Lance Steam PCV setpoint of 30 psig ensures the steam pressure at the lance is less than or equal to the SAV

(i.e., 30 psig). Based on operating experience, the pressure drop from the 242-25H Evaporator Lance Steam PCV to the evaporator lance outlet is at least 3 psig. Therefore, even if steam pressure is at the maximum 242-25H Evaporator Lance Steam PCV setpoint (30 psig) at the steam pressure reducing station, the piping losses would account for any tolerance in the setpoint such that the steam pressure is less than or equal to the SAV. The 242-25H Evaporator Lance Steam PRV is required to have a maximum setpoint of 42 psig which protects the design pressure of the evaporator lance piping and components. The 242-25H Evaporator Lance Steam PRV setting does not ensure that the steam pressure at the lance is less than or equal to the SAV.

The 242-25H Evaporator Lance Steam PCV and Lance Steam PRV are required during normal operations, and during and following a Seismic Event.

The 242-25H Evaporator Lance Steam PCV and Lance Steam PRV are credited as an SS control for the following events:

- Evaporator Overpressure
- Seismic Event

4.4.39.2 System Description

The 242-25H Evaporator utilizes a 150/25# PCV to supply 25 psig steam to the lance line. Downstream of the PCV there is a PRV that provides overpressure protection in case of the PCV failure.

The 242-25H Evaporator PCV has a bypass line containing one manually operated bypass valve that must be administratively controlled closed during evaporator operation. See Figure 4.4-16.

4.4.39.3 System Evaluation

Functionality is assured through the implementation of the NMMP and associated testing/inspection.

The associated section of Table 4.4-2 summarizes the DR evaluation for the 242-25H Evaporator Lance Steam PCV and Lance Steam PRV. The 242-25H Evaporator Lance Steam PCV and Lance Steam PRV meet the DRs for an SS SSC.

4.4.40 SUBMERSIBLE MIXER PUMP COLUMN PRESSURE BOUNDARY

4.4.40.1 Safety Function and Functional Requirements

The SMP Column Pressure Boundary provides a passive boundary to prevent waste from entering the SMP column, resulting in subsequent hydrogen buildup and explosion causing a radiological release to the environment. The SMP Column Pressure Boundary integrity is required during normal operations, and during and following a Seismic Event. The SMP Column Pressure Boundary is designed or protected from corrosion, external fire, and external impacts.

The SMP Column Pressure Boundary is credited as an SS control for the following events:

- Waste Tank Explosion (SMP Column Explosion)
- Seismic Event

4.4.40.2 System Description

The SMP Column Pressure Boundary ensures that waste from the tank does not leak into the pump column. The maximum height of the SMP pump column above the tank top is 25 feet when the vendor manifold is located at the top of the riser. Near the top of the column, epoxy resin fills the opening between the power cables and the column penetrations. The epoxy is not considered SS. See Figure 4.4-19.

4.4.40.3 System Evaluation

Functionality is assured through the implementation of the Structural Integrity Program.

The SMP was procured and built as a PS SSC, but the SMP Column Pressure Boundary is considered capable of performing its SS function based on the following:

- The SMP was procured to level 2 specifications
- The procurement required the vendor to comply with applicable NQA-1 QA requirements for design, fabrication, inspection and testing which meets all SS requirements
- All critical testing was witnessed and selected reports/documents were reviewed by an SRS representative
- The pressure boundary was successfully pressure tested by the vendor
- The SMP will be installed into the waste tank as an SS SSC

The associated section of Table 4.4-2 summarizes the DR evaluation for the SMP Column Pressure Boundary. The SMP Column Pressure Boundary meets the DRs for an SS SSC.

4.4.41 SUBMERSIBLE MIXER PUMP FLUSH/MOTOR PRESSURE BOUNDARY

4.4.41.1 Safety Function and Functional Requirements

The SMP Flush/Motor Pressure Boundary provides a passive boundary to prevent waste from entering the SMP column, resulting in a subsequent radiological release to the environment from a spill, spray, or an explosion. The SMP Flush/Motor Pressure Boundary integrity is required during normal operations, and during and following a Seismic Event. The SMP Flush/Motor Pressure Boundary is designed or protected from corrosion, external fire, and external impacts.

The SMP Flush/Motor Pressure Boundaries are credited as an SS control for the following events:

- Transfer Error/SMP Waste Release

- Waste Tank Explosion (SMP Column Explosion)
- Seismic Event

4.4.41.2 System Description

The SMP Flush/Motor Pressure Boundary is made up of passive design features that ensure that waste (either from the motor or the flush piping) does not leak into the pump column. See Figure 4.4-19.

4.4.41.3 System Evaluation

Functionality is assured through the implementation of the Structural Integrity Program.

The SMP was procured and built as a PS SSC, but the SMP Flush/Motor Pressure Boundary is considered capable of performing its SS function based on the following:

- The SMP was procured to level 2 specifications
- The procurement required the vendor to comply with applicable NQA-1 QA requirements for design, fabrication, inspection and testing which meets all SS requirements
- All critical testing was witnessed and selected reports/documents were reviewed by an SRS representative
- The pressure boundary was successfully pressure tested by the vendor
- The SMP will be installed into the waste tank as an SS SSC

The associated section of Table 4.4-2 summarizes the DR evaluation for the SMP Flush/Motor Pressure Boundary. The SMP Flush/Motor Pressure Boundary meets the DRs for an SS SSC.

4.4.42 SUBMERSIBLE MIXER PUMP RISER CONDUCTIVITY PROBE INTERLOCK

4.4.42.1 Safety Function and Functional Requirements

The SMP Riser Conductivity Probe Interlock provides an interlock to stop SMP operation upon indication of liquid waste within those risers that contain a SMP and do not have credited drains to minimize the potential for waste to overflow the SMP riser, mitigating a release of radioactive material to the environment. The SMP Riser Conductivity Probe Interlock limits the amount of waste that can overflow the riser.

The SMP Riser Conductivity Probe Interlock is required during normal operations, and during and following a Seismic Event.

The SMP Riser Conductivity Probe Interlock is credited as an SS control for the following events:

- Transfer Error/SMP Waste Release

- Seismic Event

4.4.42.2 System Description

The major components of each SMP Riser Conductivity Probe Interlock includes a stainless steel sensing probe, aircraft cable/wiring, level sensing relay, and interlock contact in the SMP power supply. Power supplies to the sensing circuit, annunciator, and the functional test switch are not within the SS boundary. A loss of power to the sensing and interlock circuits will result in the actuation of the interlock (i.e., fail-safe design). See Figure 4.4-18.

All active and passive components that comprise the sensing and interlock circuit are considered SS components. These components include but are not limited to the signal cable, grounding pathway, terminal blocks, cable connectors, sensing relays, and interlock contact.

4.4.42.3 System Evaluation

Functionality is assured through the implementation of applicable SRs, as identified in the TSRs.

The associated section of Table 4.4-2 summarizes the DR evaluation for the SMP Riser Conductivity Probe Interlock. The SMP Riser Conductivity Probe Interlocks are designed, procured, installed, tested, and maintained as SS equipment and meet the DRs for an SS SSC.

4.4.43 SUBMERSIBLE MIXER PUMP ELECTRICAL BREAKERS/DISCONNECTS

4.4.43.1 Safety Function and Functional Requirements

SMP Electrical Breakers/Disconnects mitigate a radiological material release to the environment by providing a means to secure power to the SMP and to minimize the potential for an explosion following a Seismic Event. SMP Electrical Breakers/Disconnects are capable of securing power to the SMP during normal operations and following a Seismic Event.

SMP Electrical Breakers/Disconnects are credited as an SS control for the following events:

- Transfer Error/SMP Waste Release
- Aerosolization Events
- Seismic Event

4.4.43.2 System Description

The SMPs have various electrical components that can be used to manually interrupt electrical power to the motor.

4.4.43.3 System Evaluation

Functionality is assured through the implementation of the NMMP.

The associated section of Table 4.4-2 summarizes the DR evaluation for the SMP Electrical Breakers/Disconnects. SMP Electrical Breakers/Disconnects meet the DRs for an SS SSC.

4.4.44 TANK 50 WASTE TEMPERATURE MONITORING

4.4.44.1 Safety Function and Functional Requirements

Tank 50 Waste Temperature Monitoring provides local indication of average bulk waste temperature to verify initial conditions for maintaining flammable vapor concentration in the tank are protected. Maintaining the average bulk waste temperature in Tank 50 will ensure that equilibrium Isopar® L and trace organics are maintained within initial conditions (< 60%) for the contribution to the Tank 50 steady state CLFL. Tank 50 Waste Temperature Monitoring is required during normal operations.

Tank 50 Waste Temperature Monitoring is credited as an SS control for the following event:

- Waste Tank Explosion

4.4.44.2 System Description

The major SS components comprising Tank 50 Waste Temperature Monitoring include a temperature element (thermocouple) and a temperature indicator. Tank 50 Waste Temperature Monitoring is accomplished by either of two independent loops. Each loop includes a temperature element installed inside of a common thermowell. Each temperature element is connected to a separate temperature indicator to provide local indication capability. Additional temperature elements share the same thermowell and provide supplemental, non-credited temperature monitoring capability at various elevations within the waste tank. Signal output from the SS temperature indicators is not credited for any safety function. The thermowell and power supplies to the SS temperature indicators are not within the SS boundary. See Figure 4.4-21.

All active and passive components that comprise the credited sensing and indication circuit are considered SS components.

4.4.44.3 System Evaluation

Functionality is assured through the implementation of applicable SRs, as identified in the TSRs.

The Tank 50 Waste Temperature Monitoring function must operate at a SIL-1 reliability.

The associated section of Table 4.4-2 summarizes the DR evaluation for Tank 50 Waste Temperature Monitoring. Tank 50 Waste Temperature Monitoring is designed, procured, installed, tested, and maintained as SS equipment and meets the DRs for an SS SSC.

4.4.45 DELETED

4.4.46 DELETED

4.4.47 242-16H AND 242-25H EVAPORATOR MERCURY MONITORING

4.4.47.1 Safety Function and Functional Requirements

The 242-16H and 242-25H Evaporator Mercury Monitoring provides local indication of mercury quantity in the Mercury Removal Tank (MRT) and associated collection system to verify mercury inventory initial conditions are protected. The 242-16H and 242-25H Evaporator Mercury Monitoring is required during normal operations.

The 242-16H and 242-25H Evaporator Mercury Monitoring is credited as an SS control for the following event:

- Chemical Release

4.4.47.2 System Description

The 242-16H and 242-25H Evaporator Mercury Monitoring utilizes an installed sight glass located at the end of the MRT drain line. The sight glass allows operators to periodically monitor mercury inventory and initiate actions (e.g., drain/collect mercury) as necessary.

The MRT drain line sight glass has a graduated scale located on a sight glass rod adjacent to the sight glass window. During sight glass repair or replacement, the sight glass graduated scale (indicated volume increments) is adjusted to ensure proper indication and account for mercury that can be held up between the upper sight glass drain valve and the indicated volume increment. The SS boundary for the 242-16H and 242-25H Evaporator Mercury Monitoring only includes the sight glass, as this will provide indication of mercury inventory.

The MRT drain line contains two manually operated valves between the MRT and the MRT drain line sight glass. One valve is an isolation valve and the other is a 3-way valve used to align the MRT drain line to the Mercury Collection Station or to the Overheads Receiver Tanks. To ensure the sight glass is capable of detecting mercury inventory during evaporator operation, the isolation valve is open and the 3-way valve is positioned to align the MRT drain line to the Mercury Collection Station. See Figure 4.4-23.

4.4.47.3 System Evaluation

Functionality is assured through the implementation of applicable SRs, as identified in the TSRs, and the NMMP and associated testing/inspection.

The associated section of Table 4.4-2 summarizes the DR evaluation for the 242-16H and 242-25H Evaporator Mercury Monitoring. The 242-16H and 242-25H Evaporator Mercury Monitoring are designed, procured, installed, tested, and maintained as SS equipment and meet the DRs for an SS SSC.

4.5 REFERENCES

1. Nuclear Safety Management. Title 10 Energy, Code of Federal Regulations. Part 830, U.S. Department of Energy, Washington, DC, January 2001.

2. Preparation Guide for U.S. Department of Energy Nonreactor Nuclear Facility Documented Safety Analyses. DOE-STD-3009-94, Change Notice No. 3, U.S. Department of Energy, Washington, DC, March 2006.

3. Functional Classification. Procedure Manual E7, Procedure 2.25A.

4. Functional Classification Methodology Manual (U). WSRC-TM-93-9, Rev. 5, November 2004.

5. General Design Criteria. DOE Order 6430.1A, U.S. Department of Energy, Washington, DC, April 1989.

6. Backfit Analysis Process. Procedure Manual E7, Procedure 3.41.

7. Natural Phenomena Hazards Performance Categorization Guidelines for Structures, Systems, and Components. DOE-STD-1021-93, U.S. Department of Energy, Washington, DC, Reaffirmed with Errata April 2002.

8. Liquid Radioactive Waste Handling Facilities Backfit Methodology for Final Functional Classification Implementation (U). G-TRT-G-00004, Rev. 1, April 1997.

9. Code of Record for SRS Process Piping Systems (U). Data Letter TCDL-053, Rev. 0, August 2001.

10. d'Entremont, P.D., Jeffrey, J.K., Hester, J.R., and Hill, P.J. Lower Source Terms for F-Area Tanks. WSRC-TR-2002-00260, Rev. 1, July 2002.

11. Deleted

12. Smart Plant Foundation. Licensed to Savannah River Site, Aiken, SC.

13. High Liquid Level Conductivity Probe Instrument Loops and Associated Alarm Functions (Tanks 1-15, 18-19, 21-47, and 49-51). G-BFA-G-00028, Rev. 1, May 2002.

14. Deleted

15. Transfer Path Conductivity Probe Instrument Loops and Associated Alarm Functions (Transfer Line Jacket Leak Detection Boxes (LDBs), Modified Leak Detection Boxes (MLDBs), Leak Probe Sleeves (LPS), Pump Pits (PP), Diversion Boxes (DB) and Valve Boxes (VB)). G-BFA-G-00032, Rev. 0, May 2002.

16. FPT-1 Interlock and Related Components. G-BFA-G-00033, Rev. 1, July 2005.

17. Transfer Isolation Devices. G-BFA-G-00034, Rev. 1, August 2005.

18. Waste Tank Ventilation System. G-BFA-G-00035, Rev. 1, August 2005.

19. F and H Tank Farm Diversion Box / Pump Tank / Pump Pit Active Ventilation System. G-BFA-G-00036, Rev. 3, June 2017.

20. Deleted

21. HDB-8 Standby Electrical Power. G-BFA-H-00019, Rev. 3, November 2016.

22. Waste Tank Annulus Leak Detection Conductivity Probe Instrument Loops and Associated Alarm Functions (Tank Annuli 25-51). J-BFA-G-00003, Rev. 1, August 2005.

23. Diversion Box HDB-6 and HDB-7 Ventilation System (Including HEPA Filters). M-BFA-G-00003, Rev. 1, December 2004.

24. F-Area and H-Area Waste Tank Chromate Cooling Water (CRW) and Inhibited Water (IW) Supply/Return Isolation Valves. M-BFA-G-00004, Rev. 2, August 2005.

25. Deleted

26. Ortner, T.L. to Miller, M. Review of Backfit Package G-BFA-G-00005 (U). HLW-STE-2002-00156, Westinghouse Savannah River Company, Aiken, SC, May 9, 2002.

27. Rawls, G.B. to Little, D.B. 2H/2F Evaporator Post Seismic Failure Evaluation. PEC-EAT-02-0016, Rev. 0, Westinghouse Savannah River Company, Aiken, SC, June 18, 2002.

28. Specification 7100 Primary and Secondary Steel Liner Tanks for Project 9S1747 Waste Storage Tanks 200 Area – Building 241-54F Savannah River Plant, Rev. 30, March 14, 1977.

29. Specification 6993 Primary and Secondary Steel Liner Tanks for Project 9S1618 Waste Storage Tanks 200 Area – Building 241-15H Savannah River Plant, Rev. 2, Addendum G, March 5, 1976.

30. Pellini, W.S. and Puzak, P.P. Fracture Analysis Diagram Procedures for the Fracture-Safe Engineering Design of Steel Structures. Naval Research Laboratory, NRL Report 5920, March 15, 1963.

31. Hsu, T.S. to Wood, D.C. Type III Waste Tank Failure Frequency (U). HLW-HLE-94-0522, Westinghouse Savannah River Company, Aiken, SC, March 14, 1994.

32. Fields, C.C. Input Data Generic Accident Analysis. S-CLC-G-00175, Rev. 0, October 1998.

33. HEPA Filters and Associated Ductwork for the F and H Tank Farm. G-BFA-G-00012, Rev. 1, August 2005.

34. McKeel, C.A. Flaw Stability Analysis for High Level Waste Evaporators. T-CLC-H-00617, Rev. 1, November 2006.

35. McKeel, C.A. to Ortner, T.L. 2H and 2F Evaporator Tube Bundles (U). PEC-EAT-02-0020, Westinghouse Savannah River Company, Aiken, SC, August 21, 2002.

36. Deleted

37. Deleted

38. Ortner, T.L. to Lex, T.J. Approach to Demonstrating Seismic Capability of Safety-Related Electrical Disconnects (U). CBU-LTS-2004-00188, Westinghouse Savannah River Company, Aiken, SC, December 2, 2004.

39. Campbell, T.C. Assessment of Safety Significant Alarm Loops for the H-Tank Farm Control Room Consolidation Project. J-CLC-H-00868, Rev. 1, May 2013.

40. HLW (Tank Farm) Backfit Assessment Package Fiber Optic Alarm Cable. G-BFA-H-00020, Rev. 0, February 2005.

41. H-Area Waste Tanks 30 and 35 Chromate Cooling Water Supply and Return Siphon Breakers. M-BFA-H-00006, Rev. 0, January 2005.

42. Suttinger, L.T. Assessment of Safety Class Alarm Loops for the H-Tank Farm Control Room Consolidation Project. J-CLC-H-00865, Rev. 0, November 2005.

43. Deleted

44. Deleted

45. F and H Tank Farm Diversion Box / Pump Tank / Pump Pit Ventilation Air Inlet System. G-BFA-G-00038, Rev. 0, March 2012.

46. Grimes, S.B. De Minimus Violation of IEEE Std 384 as Applied to Safety Class Fiber Optic Alarm Circuits for the Control Room Consolidation Project. J-CSE-H-00001, Rev. 0, January 2012.

47. Barnes, W.M. to Lex, T.J. Engineering Position: Guidance in Application of IEEE 384 to the H-Tank Farm Control Room Consolidation Project Safety Class Design. CBU-HDP-2004-00345, Westinghouse Savannah River Company, Aiken, SC, January 11, 2005.

48. Single Failure Analysis of Safety Class Alarm Design Modifications to HLLCP Alarms for Tanks 1 through 8, Tanks 25 through 28, Tanks 33 through 34, and Tanks 44 through 47,

J-DCP-F-10001, Rev. 2, J-DCP-F-10003, Rev. 2, J-DCP-H-10004, Rev. 0. J-ESR-F-00039, Rev. 0, December 2012.

49. Single Failure Analysis of Safety Class Alarm Design H-Tank Farm Control Room Consolidation, J-DCP-H-04028, J-DCP-H-05005. J-ESR-H-00050, Rev. 1, January 2006.

50. Single Failure Analysis of Safety Class Alarm Design Modifications to HLLCP Alarms for Tanks 29 through 32 and Tanks 35 through 37, J-DCP-H-10002. J-ESR-H-00075, Rev. 0, November 2010.

51. Campbell, T.C. Assessment of Safety Class Alarm Loops for the F-Tank Farm Control Room Consolidation Project. J-CLC-F-00443, Rev. 0, December 2012.

52. Campbell, T.C. Assessment of Safety Significant Alarm Loops for the F-Tank Farm Control Room Consolidation Project. S-CLC-F-00678, Rev. 0, December 2012.

53. SRS Engineering Standards Manual. WSRC-TM-95-1, Standard 1060.

54. SRS Engineering Standards Manual. WSRC-TM-95-1, Standard 1061.

55. Waste Tank Ventilation Steam Heater. M-BFA-G-00006, Rev. 0, May 2015.

56. Polizzi, L.M. Reanalysis of 2H/2F Evaporator Over Pressure Accident By Including Pressure Losses in Steam and Air Pipes (U). S-CLC-G-00265, Rev. 1, June 2002.

57. DOE Handbook - Nuclear Air Cleaning Handbook. DOE-HDBK-1169-2003, U.S. Department of Energy, Washington, DC, November 2003.

58. Mobley, L.L. Permissible Leak Rate for Level 4 Waste Purge Ventilation Systems. M-CLC-G-00460, Rev. 0, May 2017.

4.6 TABLES

Table 4.2-1 Design Requirements for Safety Class Structures, Systems, and Components

DESIGN REQUIREMENTS	REMARKS
1. Design Basis Earthquake (DBE) Resistance	Safety functions must not be compromised by Seismic Event up to and including the DBE for the site. To include seismic II/I considerations. For the purpose of determining DR compliance, for SSCs contained in non-qualified control rooms (including associated MCCs), it is assumed that: 1) the control room is intact, and 2) the equipment within is accessible.
2. Design Basis Tornado (DBT) Resistance	Safety functions must not be compromised by the DBT for the site. To include tornado II/I considerations.
3. Probable Maximum Flood (PMF) Resistance	Safety functions must not be compromised by the PMF for the site.
4. Probable Maximum Precipitation (PMP) Resistance	Safety functions must not be compromised by the PMP for the site.
5. Explosion/Fire Resistance	Safety functions must not be compromised by external fires or explosions (including the effects of explosion generated missiles).
6. Single Active Failure Resistance	Applies to active mechanical items. Assured by providing redundancy, independence, separation, and/or diversity.
7. Equipment Environment Consideration	SC items must be qualified to function under the most limiting accident conditions of interest at end of life.
8. SC Electrical Requirements	Applies to the design of SC electrical systems and components.
9. ASME Sect. III or Other Applicable Requirements	Applies to the design of SC piping, pumps, and pressure vessels.
10. QA Requirements	Additional QA requirements are applied to SC items to ensure that they will perform as designed.
11. Internal Hazard Resistance	Safety functions must not be compromised by internal hazards including missiles, fires, explosions, smoke, fire suppression agents, flooding, and damage caused by non-SC items and other external impacts.
12. Maintenance Requirements	SC items shall be designed to allow inspection, maintenance, and testing to ensure their continued functioning, readiness for operation, and accuracy.
13. Test Requirements	SC items shall be designed to include appropriate provisions for periodic testing. This testing must be capable of being performed in-place and on a regular schedule.
14. Functionality	SC items must be capable of performing the required safety function.

Table 4.2-2 Design Requirements for Safety Significant Structures, Systems, and Components

DESIGN REQUIREMENTS	REMARKS
1. NPH Resistance	Safety functions must not be compromised by NPH seismic, high wind, and flooding events. For the purpose of determining DR compliance with respect to NPH seismic, for SSCs contained in non-qualified control rooms (including associated MCCs), it is assumed that: 1) the control room is intact, and 2) the equipment within is accessible.
2. Equipment Environment Consideration	SS items must be designed to withstand the effects of, and be compatible with, the environmental conditions associated with operation, maintenance, shutdown, testing, and accidents.
3. Functionality	Functionality requirements are based on reliability of the SSC to perform its function and QA controls.
4. Test Requirements	SS items shall be designed to include appropriate provisions for periodic testing. This testing must be capable of being performed in-place and on a regular schedule.
5. Maintenance Requirements	SS items shall be designed to allow inspection, maintenance, and testing to ensure their continued functioning, readiness for operation, and accuracy.

Table 4.3-1 Safety Class Structures, Systems, and Components

Functional Class	Chapter 4 SC SSC	Chapter 3 Accident Reference (Notes 1, 2)	Safety Function	Functional Requirement (Note 2)	TSR Coverage
SC SS	4.3.1 Transfer Lines (Core Pipe)	Evaporator Overflow, Leaks, and Spills Transfer Line and Transfer Line Jacket/Encasement Explosions Transfer Facility Explosions Transfer Error/SMP Waste Release Waste Tank Annulus Explosion Seismic Event (SC)	Provide passive containment of liquid waste in order to prevent radioactive material leaks and spills into a transfer facility, evaporator cell, transfer line jacket/encasement, Waste Tank annuli, or the environment. Provide passive containment of acidic waste material during Chemical Cleaning Transfers.	Maintain piping integrity during normal operations, and during and following a Seismic Event. (Primary hose of the flexible hose-in-hose transfer line used for Contingency Transfer System transfers is not required during and following a Seismic Event and is required to be SS only.).	Design Feature

Table 4.3-1 Safety Class Structures, Systems, and Components (continued)

Functional Class	Chapter 4 SC SSC	Chapter 3 Accident Reference (Notes 1, 2)	Safety Function	Functional Requirement (Note 2)	TSR Coverage
SC SS	4.3.2 Transfer Line Jumpers/Connectors	Evaporator Overflow, Leaks, and Spills Transfer Line and Transfer Line Jacket/Encasement Explosions Transfer Facility Explosions Transfer Error/SMP Waste Release Seismic Event (SC)	Provide passive containment of liquid waste in order to prevent radioactive material leaks and spills into a transfer facility or evaporator cell. Provide passive containment of acidic waste material during Chemical Cleaning Transfers.	Maintain jumper integrity during normal operations, and during and following a Seismic Event.	Design Feature

Table 4.3-1 Safety Class Structures, Systems, and Components (continued)

Functional Class	Chapter 4 SC SSC	Chapter 3 Accident Reference (Notes 1, 2)	Safety Function	Functional Requirement (Note 2)	TSR Coverage
SC SS	4.3.3 Transfer Line Isolation Valves	Transfer Line and Transfer Line Jacket/Encasement Explosions Transfer Facility Explosions Pump Pit and Pump Tank Explosion Transfer Error/SMP Waste Release Waste Tank Explosion (SC) Waste Tank Annulus Explosion (SC) Waste Tank/Pump Tank Overheating (SC) Waste Tank Wall Failure (SC) Siphon/Pump-Out Event (SC) Seismic Event (SC)	Provide passive containment of liquid waste in order to prevent radioactive material releases and spills into a transfer facility. Provide for manual isolation of a transfer path to prevent radiological material release to the environment. Provide passive containment of the acidic waste material in the evaporator (during chemical cleaning operations) to prevent the introduction of acidic material into a waste tank. (242-16H Evaporator Isolation Valves). Provide passive containment of acidic waste material during Chemical Cleaning Transfers.	Maintain containment integrity such that transfer line valve body failure is prevented during normal operations, and during and following a Seismic Event. Capable of being closed during normal operations and following a Seismic Event (excluding 242-16H Evaporator Isolation Valves).	Design Feature

Table 4.3-1 Safety Class Structures, Systems, and Components (continued)

Functional Class	Chapter 4 SC SSC	Chapter 3 Accident Reference (Notes 1, 2)	Safety Function	Functional Requirement (Note 2)	TSR Coverage
SC SS	4.3.4 DBs (Including High Point Flush Pit)	Transfer Line and Transfer Line Jacket/Encasement Explosions Transfer Facility Explosions Transfer Error/SMP Waste Release Aerosolization Events Tornado/High Winds Event Seismic Event (SC) Wildland Fire	Provide passive confinement to mitigate a release of radioactive material to the environment; provide structural integrity to support transfer line integrity (II/I). Support ventilation system operation (as applicable). DBs that have an overflow capacity of ≥ 15,000 gallons of liquid waste are designed and maintained to contain a spill of radioactive material up to 15,000 gallons. DBs that have an overflow capacity of less than 15,000 gallons of liquid waste and those DBs that are in the transfer path for High-Rem, or ESP Sludge Slurry (HDB-7 only) transfers provide containment to channel liquid, such that the level detection equipment can perform its function in order to mitigate an event. DBs that are in the transfer path for Low-Rem waste transfers provide airborne waste confinement in order to mitigate an event.	Maintain box integrity during normal operations, during an external fire event, and during and following a Seismic Event.	Design Feature
SC	4.3.5 DB Sump Steam Jet (Including steam supply piping inside the DB)	Aerosolization Events (SC) Seismic Event (SC)	Provide passive containment of the motive steam/air in order to prevent radioactive material aerosolization and its subsequent release from the DB. Constructed of corrosion resistant material.	Maintain their boundary integrity during normal operations, and during and following a Seismic Event.	Design Feature

Table 4.3-1 Safety Class Structures, Systems, and Components (continued)

Functional Class	Chapter 4 SC SSC	Chapter 3 Accident Reference (Notes 1, 2)	Safety Function	Functional Requirement (Note 2)	TSR Coverage
SC SS	4.3.6 VBs (Including Drain VBs)	Transfer Line and Transfer Line Jacket/Encasement Explosions Transfer Facility Explosions Transfer Error/SMP Waste Release Tornado/High Winds Event Seismic Event (SC) Wildland Fire	Provide passive confinement to minimize a release of radioactive material to the environment; provide structural integrity to support transfer line integrity (II/I). Provide containment to channel liquid such that the level detection equipment can perform its function in order to mitigate an event.	Maintain box integrity during normal operations, during an external fire event, and during and following a Seismic Event.	Design Feature
SC SS	4.3.7 PPs	Transfer Line and Transfer Line Jacket/Encasement Explosions Transfer Facility Explosions Pump Pit and Pump Tank Explosion Transfer Error/SMP Waste Release Aerosolization Events Waste Tank/Pump Tank Overheating Tornado/High Winds Event Seismic Event (SC) Wildland Fire Loss of Offsite Power	Provide passive confinement to minimize a release of radioactive material to the environment; provide structural integrity to support transfer line integrity (II/I). Provide containment to channel liquid such that the level detection equipment can perform its function in order to mitigate an overflow of the PP and support PP ventilation system operation.	Maintain PP integrity during normal operations, during an external fire event, and during and following a Seismic Event.	Design Feature

Table 4.3-1 Safety Class Structures, Systems, and Components (continued)

Functional Class	Chapter 4 SC SSC	Chapter 3 Accident Reference (Notes 1, 2)	Safety Function	Functional Requirement (Note 2)	TSR Coverage
SC	4.3.8 PP Sump Steam Jet (Including steam supply piping inside PP)	Aerosolization Events (SC) Seismic Event (SC)	Provide passive containment of the motive steam/air thereby preventing radioactive material aerosolization and its subsequent release from the PP. Constructed of corrosion resistant material.	Maintain their boundary integrity during normal operations, and during and following a Seismic Event.	Design Feature
SC SS	4.3.9 Pump Tanks	Pump Pit and Pump Tank Explosion Transfer Error/SMP Waste Release Aerosolization Events Waste Tank/Pump Tank Overheating Seismic Event (SC) Loss of Offsite Power	Provide passive containment to minimize a release of radiological material to the environment. Support Pump Tank ventilation system operation.	Maintain pump tank integrity during normal operations, and during and following a Seismic Event.	Design Feature
SC SS	4.3.10 Type I, II, III, IIIA Waste Tanks	Aerosolization Events Waste Tank Explosion Waste Tank Annulus Explosion (SC) Waste Tank/Pump Tank Overheating Waste Tank Wall Failure (SC) Tornado/High Winds Event Seismic Event (SC) Wildland Fire Loss of Offsite Power	Provide passive containment of the tank contents to prevent a release of liquid radiological material to the environment, provide passive confinement to mitigate an airborne radiological material release, and maintain structural integrity. Support ventilation system operation.	Maintain structural integrity during normal operations, during an external fire event, during and following a Tornado/High Winds Event, and during and following a Seismic Event.	Design Feature

Table 4.3-1 Safety Class Structures, Systems, and Components (continued)

Functional Class	Chapter 4 SC SSC	Chapter 3 Accident Reference (Notes 1, 2)	Safety Function	Functional Requirement (Note 2)	TSR Coverage
SC SS	4.3.11 Type I, II, III, IIIA Waste Tank HLLCPs and Alarms (Excluding Tank 50)	Transfer Error/SMP Waste Release Aerosolization Events (SC) Waste Tank Explosion (SC) Waste Tank Annulus Explosion (SC) Waste Tank/Pump Tank Overheating Waste Tank Wall Failure (SC) Waste Tank Siphon/Pump-Out Tornado/High Winds Event (SC) Seismic Event (SC) Wildland Fire (SC) Loss of Offsite Power (SC)	Maintain flammability control of the tank vapor space by providing control room alarm of a waste tank high level condition. Prevent the release of radiological material to the environment (overflow). Provide control room alarm for a waste tank high level condition to protect tank wall integrity requirements, waste tank wall failure, tank wall exposed area conditions, and waste tank annulus explosion by limiting fill levels as an initial condition. For Waste Tanks 1, 2, 3, 4, 7, 8, 9, 10, and 11 the HLLCP prevent a siphon event by limiting fill levels as an initial condition. Alarms are used to initiate operator actions needed to limit the amount of waste in a waste tank. Type I, II Waste Tank HLLCPs and Alarms on Type I/II Acidic Chemical Cleaning Waste Tanks protect the initial condition (fill limits) for flammability/wall leak analysis	HLLCPs and alarms are required during normal operations.	LCO Required

Table 4.3-1 Safety Class Structures, Systems, and Components (continued)

Functional Class	Chapter 4 SC SSC	Chapter 3 Accident Reference (Notes 1, 2)	Safety Function	Functional Requirement (Note 2)	TSR Coverage
SC SS	4.3.12 Type I, II, III, IIIA Waste Tank Purge Ventilation Systems (Excluding Tank 50)	Aerosolization Events Waste Tank Explosion (SC) Waste Tank/Pump Tank Overheating	Provide sufficient tank purge to maintain bulk vapor space less than or equal to 25% of the LFL (ensures vapor space is less than or equal to the hydrogen concentration SAV and protects hydrogen concentration to ensure minimum time to LFL is protected). For free supernate removal activities (in conjunction with the Gas Release Program), maintains minimum time to LFL. For spontaneous liberation events and other activities (sludge agitation, bulk saltcake dissolution, and saltcake interstitial liquid removal), minimizes potential for flammable vapor concentration by providing a continuous purge of the tank vapor space. For activities (sludge agitation, bulk saltcake dissolution, and saltcake interstitial liquid removal) that exceed Gas Release Criteria, provides sufficient tank purge (in conjunction with the Gas Release Program) to maintain bulk vapor space hydrogen concentration less than or equal to the SAV and maintain minimum time to LFL. Provide an active filtered release path for potential radiological releases from the waste tank vapor space. Provide an active elevated release path to ensure adequate dispersion of potential chemical vapors from the waste tank vapor space.	Waste Tank Purge Ventilation Systems are required during normal operations.	LCO Required

Table 4.3-1 Safety Class Structures, Systems, and Components (continued)

Functional Class	Chapter 4 SC SSC	Chapter 3 Accident Reference (Notes 1, 2)	Safety Function	Functional Requirement (Note 2)	TSR Coverage
SC SS	4.3.13 Waste Tank Ventilation Low Flow Interlock	Waste Tank Explosion (SC) Seismic Event (SC)	Prevent waste tank vapor space from exceeding the hydrogen concentration SAV defined by the Flammability Control Program or become flammable following a trapped gas release within the minimum time to LFL as defined by the waste tank flammability classification, during sludge agitation (using waste tank mixing devices), bulk saltcake dissolution, and saltcake interstitial liquid removal activities. Provide interlock to stop waste tank mixing devices, stop transfer pumps associated with waste tank recirculation, close the dissolution liquid addition valves, and stop transfer pumps associated with saltcake interstitial liquid removal when low ventilation flow or failure of the instrument loop control power occurs.	Interlock is required during normal operations, and during and following a Seismic Event.	LCO Required
	4.3.14 Deleted				
SC SS	4.3.15 Waste Tank Transfer Jets (Including steam supply piping inside the waste tank)	Aerosolization Events (SC) Seismic Event (SC) Waste Tank/Pump Tank Overheating	Provide passive containment of the motive steam/air to prevent radioactive material aerosolization from steam/air impingement at the liquid surface and its subsequent release from the waste tank. Provide passive containment of the motive steam to prevent overheating of the waste and its subsequent release of radioactive material from the waste tank. Constructed of corrosion resistant material.	Maintain their boundary integrity during normal operations, and during and following a Seismic Event.	Design Feature

Table 4.3-1 Safety Class Structures, Systems, and Components (continued)

Functional Class	Chapter 4 SC SSC	Chapter 3 Accident Reference (Notes 1, 2)	Safety Function	Functional Requirement (Note 2)	TSR Coverage
SC	4.3.16 242-16H and 242-25H Evaporator Cells	Evaporator Cell Explosion Evaporator Overflow, Leaks, and Spills Transfer Line and Transfer Line Jacket/Encasement Explosions Tornado/High Winds Event (SC) Wildland Fire	Provide protection to the evaporator vessels thereby preventing the release of radioactive material from the evaporator vessel. Provide passive confinement of evaporator and cell contents to prevent a release of radiological material to the environment. Provide passive containment to minimize the potential for a release of radioactive material to the environment.	The Evaporator Cells maintain structural integrity during normal operations, during an external fire event, and during a Tornado/High Winds Event.	Design Feature
SC	4.3.17 Waste Tank Chromate Water Coil Siphon Breakers	Waste Tank Siphon/Pump-Out (SC) Seismic Event (SC)	Prevent/minimize release of radioactive material to the environment by preventing siphon and pump out conditions in Waste Tanks 13, 14 (when connected to the CRW System), 15 (when connected to the CRW System), 29, 30, 31, 32, 33, 34, and 35. Siphon Breakers on Tanks 33 and 34 are SS.	Siphon Breakers are required during normal operations and following a Seismic Event.	LCO Required
SC	4.3.18 242-16H Evaporator Feed Pump Backflow Prevention Devices	Transfer Error/SMP Waste Release Seismic Event (SC)	Minimize waste from being pushed back through the Flush Water System and released above-ground in the event that Flush Water System pressure is lost while priming the evaporator feed pump.	Evaporator Feed Pump Backflow Prevention Devices are required during normal operations, and during and following a Seismic Event.	LCO Required

Table 4.3-1 Safety Class Structures, Systems, and Components (continued)

Functional Class	Chapter 4 SC SSC	Chapter 3 Accident Reference (Notes 1, 2)	Safety Function	Functional Requirement (Note 2)	TSR Coverage
SC SS	4.3.19 Type I, II, III, IIIA Waste Tank Annulus Transfer Jets (Including steam supply piping)	Aerosolization Events (SC) Seismic Event (SC) Waste Tank/Pump Tank Overheating	Provide passive containment of the motive steam/air to prevent radioactive material aerosolization from the steam/air impingement at the liquid surface and its subsequent release from the annulus. Provide passive containment of the motive steam to prevent overheating of the waste and its subsequent release of radioactive material from the annulus.	Maintain their boundary integrity during normal operation, and during and following a Seismic Event.	Design Feature

Note 1: All SC SSCs are SS. The SC FC of the SSC is associated with the accident identified with (SC) following it (see Note 2).

Note 2: Conditional aspects (including those related to process area applicability for FC of the SSC) are not reflected on this table for the Chapter 3 Accident Reference and Functional Requirement columns. Refer to the applicable subsection in Section 4.3 or Chapter 3.

Table 4.3-2 Safety Class Evaluations

Design Criteria Assessment Matrix 4.3.1 Transfer Lines (Core Pipe)		
Design Requirements	**Requirement Met**	**Basis/References**
1. DBE Resistance	Yes	Transfer Lines (excluding primary hose of the flexible hose-in-hose transfer line used during Contingency Transfer System transfers) were evaluated to meet current SC seismic requirements (Ref. 12).
2. DBT Resistance	N/A	Transfer Lines are not credited during a DBT.
3. PMF Resistance	N/A	Transfer Lines are not credited during a PMF.
4. PMP Resistance	N/A	Transfer Lines are not credited during a PMP.
5. Explosion/Fire Resistance	N/A	Transfer Lines are not credited with surviving an explosion or a fire event.
6. Single Active Failure Resistance	N/A	Transfer Lines are passive devices. Single failure design criteria is not applicable.
7. Equipment Environment Consideration	Yes	Transfer Lines were designed and installed to operate in their current environment (excluding carbon steel segments). The carbon steel Transfer Line segments are susceptible to degradation from acidic waste transfers and may affect its ability to perform its safety function. Based on the compensatory actions given in Section 4.3.1.3, this DR has been satisfied.
8. SC Electrical Requirements	N/A	The Transfer Lines do not require electrical power to perform its safety function.
9. ASME Sect. III or Other Applicable Requirements	Yes	Transfer Lines were installed using applicable DuPont standards that are equivalent to the ASME standards at the time of construction.
10. QA Requirements	Yes	Transfer Lines met the DuPont standards of the time. Current QA requirements are met based on the compensatory actions given in Section 4.3.
11. Internal Hazard Resistance	Yes	Transfer Lines meet the requirements for internal hazard resistance.
12. Maintenance Requirements	Yes	Transfer Lines are capable of being maintained.
13. Test Requirements	N/A	Transfer Lines are passive design features and not required to be tested.
14. Functionality	Yes	Transfer Lines are capable of providing containment of radioactive material.

Table 4.3-2 Safety Class Evaluations (continued)

Design Criteria Assessment Matrix 4.3.2 Transfer Line Jumpers/Connectors		
Design Requirements	**Requirement Met**	**Basis/References**
1. DBE Resistance	Yes	Transfer Line Jumpers/Connectors were evaluated to meet current SC seismic requirements (Ref. 12).
2. DBT Resistance	N/A	Transfer Line Jumpers/Connectors are not credited during a DBT.
3. PMF Resistance	N/A	Transfer Line Jumpers/Connectors are not credited during a PMF.
4. PMP Resistance	N/A	Transfer Line Jumpers/Connectors are not credited during a PMP.
5. Explosion/Fire Resistance	N/A	Transfer Line Jumpers/Connectors are not credited with surviving an explosion or a fire event.
6. Single Active Failure Resistance	N/A	Transfer Line Jumpers/Connectors are passive devices. Single failure design criteria is not applicable.
7. Equipment Environment Consideration	Yes	Transfer Line Jumpers/Connectors were designed and installed to operate in their current environment.
8. SC Electrical Requirements	N/A	The Transfer Line Jumpers/Connectors do not require electrical power to perform its safety function.
9. ASME Sect. III or Other Applicable Requirements	Yes	Transfer Line Jumpers/Connectors were installed using applicable DuPont standards that are equivalent to the ASME standards at the time of construction.
10. QA Requirements	Yes	Transfer Line Jumpers/Connectors met the DuPont standards of the time. Current QA requirements are met based on the compensatory actions given in Section 4.3.
11. Internal Hazard Resistance	Yes	Transfer Line Jumpers/Connectors meet the requirements for internal hazard resistance.
12. Maintenance Requirements	Yes	Transfer Line Jumpers/Connectors are capable of being maintained.
13. Test Requirements	N/A	Transfer Line Jumpers/Connectors are passive design features and not required to be tested.
14. Functionality	Yes	Transfer Line Jumpers/Connectors are capable of providing containment of radioactive material.

Table 4.3-2 Safety Class Evaluations (continued)

Design Criteria Assessment Matrix 4.3.3 Transfer Line Isolation Valves		
Design Requirements	**Requirement Met**	**Basis/References (Ref. 17)**
1. DBE Resistance	Yes	Transfer Line Isolation Valves were evaluated to meet current SC seismic requirements (Ref. 12). 242-16H Evaporator Isolation Valves meet current SC seismic requirements.
2. DBT Resistance	N/A	Transfer Line Isolation Valves are not credited during a DBT.
3. PMF Resistance	N/A	Transfer Line Isolation Valves are not credited during a PMF.
4. PMP Resistance	N/A	Transfer Line Isolation Valves are not credited during a PMP.
5. Explosion/Fire Resistance	Yes	Transfer Line Isolation Valves are constructed of non-combustible material. The steel and stainless steel construction of the valves provides protection against an explosion and fire.
6. Single Active Failure Resistance	N/A	Transfer Line Isolation Valves are passive devices. Single failure design criteria is not applicable.
7. Equipment Environment Consideration	Yes	242-16H Evaporator Isolation Valves were designed and manufactured to operate in their current environment. The remaining Transfer Line Isolation Valves were not all adequately designed and manufactured to operate in their current environment. Based on the compensatory actions given in Section 4.3.3.3, this DR has been satisfied.
8. SC Electrical Requirements	N/A	The Transfer Line Isolation Valves do not require electrical power to perform its safety function.
9. ASME Sect. III or Other Applicable Requirements	Yes	242-16H Evaporator Isolation Valves are installed using applicable ASME standards. The remaining Transfer Line Isolation Valves were installed using applicable DuPont standards that are equivalent to the ASME standards at the time of construction.
10. QA Requirements	Yes	242-16H Evaporator Isolation Valves meet current QA requirements. The remaining Transfer Line Isolation Valves met the DuPont standards of the time. Current QA requirements are met based on the compensatory actions given in Section 4.3.
11. Internal Hazard Resistance	N/A	Transfer Line Isolation Valves are not credited to withstand internal hazard events.
12. Maintenance Requirements	Yes	Transfer Line Isolation Valves are capable of being maintained.
13. Test Requirements	Yes	242-16H Evaporator Isolation Valves are capable of being tested. The remaining Transfer Line Isolation Valves are designed and installed to support periodic testing, however not all valves can be effectively tested. Based on the compensatory actions given in Section 4.3.3.3, this DR has been satisfied.
14. Functionality	Yes	Transfer Lines Isolation Valves are capable of providing containment of radioactive material and stopping system flow.

Table 4.3-2 Safety Class Evaluations (continued)

Design Criteria Assessment Matrix 4.3.4 Diversion Boxes (Including High Point Flush Pit)		
Design Requirements	**Requirement Met**	**Basis/References**
1. DBE Resistance	Yes	DBs were evaluated to meet current SC seismic requirements (Ref. 12).
2. DBT Resistance	N/A	DBs are not credited during a DBT. If the DB structures survive during a Tornado/High Winds Event, they are credited to provide mitigation for an explosion. The DB structures are not required to withstand high winds (i.e., the structures are not required to be PC-2 high wind qualified) since loss of confinement prior to the event would prevent the event (i.e., the flammable vapors would not accumulate).
3. PMF Resistance	N/A	DBs are not credited during a PMF.
4. PMP Resistance	N/A	DBs are not credited during a PMP.
5. Explosion/Fire Resistance	Yes	DBs are constructed of non-combustible material. The concrete and stainless steel construction of the boxes provides limited integrity against an explosion and fire.
6. Single Active Failure Resistance	N/A	DBs are passive devices. Single failure design criteria is not applicable.
7. Equipment Environment Consideration	Yes	DBs are constructed of reinforced concrete and are water proofed or lined with stainless steel.
8. SC Electrical Requirements	N/A	The DBs do not require electrical power to perform its safety function.
9. ASME Sect. III or Other Applicable Requirements	Yes	DBs were designed and constructed to DuPont or SRS standards, which have been determined to be consistent with applicable national consensus codes at the time of construction.
10. QA Requirements	Yes	DBs met the DuPont standards of the time. Current QA requirements are met based on the compensatory actions given in Section 4.3.
11. Internal Hazard Resistance	Yes	The reinforced concrete construction of the DBs provides integrity against an internal hazard.
12. Maintenance Requirements	Yes	DBs are capable of being maintained.
13. Test Requirements	N/A	DBs are passive design features and not required to be tested.
14. Functionality	Yes	DBs are capable of providing confinement/containment of radioactive material and supporting ventilation system operation.

Table 4.3-2 Safety Class Evaluations (continued)

Design Criteria Assessment Matrix 4.3.5 Diversion Box Sump Steam Jet (Including Steam Supply Piping)		
Design Requirements	**Requirement Met**	**Basis/References**
1. DBE Resistance	Yes	The DB Sump Steam Jets were evaluated to meet current SC seismic requirements (Ref. 12).
2. DBT Resistance	N/A	The DB Sump Steam Jets are not credited during a DBT.
3. PMF Resistance	N/A	The DB Sump Steam Jets are not credited during a PMF.
4. PMP Resistance	N/A	The DB Sump Steam Jets are not credited during a PMP.
5. Explosion/Fire Resistance	N/A	The DB Sump Steam Jets are not credited during an explosion or fire.
6. Single Active Failure Resistance	N/A	The DB Sump Steam Jets are passive devices. Single failure design criteria is not applicable.
7. Equipment Environment Consideration	Yes	The stainless steel piping and jets were designed and manufactured to operate in their current environment.
8. SC Electrical Requirements	N/A	The DB Sump Steam Jets do not require electrical power to perform its safety function.
9. ASME Sect. III or Other Applicable Requirements	Yes	All DB Sump Steam Jets were designed and installed in accordance with DuPont codes and standards equivalent to codes and standards at the time of construction.
10. QA Requirements	Yes	The DB Sump Steam Jets met the DuPont standards of the time. Current QA requirements are met based on the compensatory actions given in Section 4.3.
11. Internal Hazard Resistance	N/A	The DB Sump Steam Jets are not credited to withstand internal hazard events.
12. Maintenance Requirements	Yes	The DB Sump Steam Jets are capable of being maintained.
13. Test Requirements	N/A	The DB Sump Steam Jets are passive design features and not required to be tested.
14. Functionality	Yes	The DB Sump Steam Jets are capable of providing steam/air containment.

Table 4.3-2 Safety Class Evaluations (continued)

Design Criteria Assessment Matrix 4.3.6 Valve Boxes (Including Drain Valve Boxes)		
Design Requirements	**Requirement Met**	**Basis/References**
1. DBE Resistance	Yes	VBs were evaluated to meet current SC seismic requirements (Ref. 12).
2. DBT Resistance	N/A	VBs are not credited during a DBT. If the VB structures survive during a Tornado/High Winds Event, they are credited to provide mitigation for an explosion. The VB structures are not required to withstand high winds (i.e., the structures are not required to be PC-2 high wind qualified) since loss of confinement prior to the event would prevent the event (i.e., the flammable vapors would not accumulate).
3. PMF Resistance	N/A	VBs are not credited during a PMF.
4. PMP Resistance	N/A	VBs are not credited during a PMP.
5. Explosion/Fire Resistance	Yes	VBs are constructed of non-combustible material. The concrete or stainless steel construction of the boxes provides limited integrity against an explosion and fire.
6. Single Active Failure Resistance	N/A	VBs are passive devices. Single failure design criteria is not applicable.
7. Equipment Environment Consideration	Yes	VBs are constructed of reinforced concrete or stainless steel.
8. SC Electrical Requirements	N/A	The VBs do not require electrical power to perform its safety function.
9. ASME Sect. III or Other Applicable Requirements	Yes	VBs were designed and constructed to DuPont or SRS standards, which have been determined to be consistent with applicable national consensus codes at the time of construction.
10. QA Requirements	Yes	VBs met the DuPont standards of the time. Current QA requirements are met based on the compensatory actions given in Section 4.3.
11. Internal Hazard Resistance	Yes	The reinforced concrete/stainless steel construction of the VBs provides integrity against an internal hazard.
12. Maintenance Requirements	Yes	VBs are capable of being maintained.
13. Test Requirements	N/A	VBs are passive design features and not required to be tested.
14. Functionality	Yes	VBs are capable of providing confinement/containment of radioactive material.

Table 4.3-2 Safety Class Evaluations (continued)

Design Criteria Assessment Matrix 4.3.7 Pump Pits		
Design Requirements	**Requirement Met**	**Basis/References**
1. DBE Resistance	Yes	PPs were evaluated to meet current SC seismic requirements (Ref. 12).
2. DBT Resistance	N/A	PPs are not credited during a DBT. If the PP structures survive during a Tornado/High Winds Event, they are credited to provide mitigation for an explosion. The PP structures are not required to withstand high winds (i.e., the structures are not required to be PC-2 high wind qualified) since loss of confinement prior to the event would prevent the event (i.e., the flammable vapors would not accumulate).
3. PMF Resistance	N/A	PPs are not credited during a PMF.
4. PMP Resistance	N/A	PPs are not credited during a PMP.
5. Explosion/Fire Resistance	Yes	PPs are constructed of non-combustible material. The below grade location and reinforced concrete construction of the PPs provides integrity against an explosion and fire.
6. Single Active Failure Resistance	N/A	PPs are passive devices. Single failure design criteria is not applicable.
7. Equipment Environment Consideration	Yes	PPs are composed of reinforced concrete and are usually lined with stainless steel.
8. SC Electrical Requirements	N/A	The PPs do not require electrical power to perform its safety function.
9. ASME Sect. III or Other Applicable Requirements	Yes	PPs were designed and constructed to DuPont or SRS Standards, which have been determined to be consistent with applicable national consensus codes at the time of construction.
10. QA Requirements	Yes	PPs met the DuPont standards of the time. Current QA requirements are met based on the compensatory actions given in Section 4.3.
11. Internal Hazard Resistance	Yes	The reinforced concrete construction of the PPs provides integrity against an internal hazard.
12. Maintenance Requirements	Yes	PPs are capable of being maintained.
13. Test Requirements	N/A	PPs are passive design features and not required to be tested.
14. Functionality	Yes	PPs are capable of providing confinement/containment of radioactive material and supporting ventilation system operation.

Table 4.3-2 Safety Class Evaluations (continued)

Design Criteria Assessment Matrix 4.3.8 Pump Pit Sump Steam Jet (Including Steam Supply Piping)		
Design Requirements	**Requirement Met**	**Basis/References**
1. DBE Resistance	Yes	The PP Sump Steam Jets were evaluated to meet current SC seismic requirements (Ref. 12).
2. DBT Resistance	N/A	The PP Sump Steam Jets are not credited during a DBT.
3. PMF Resistance	N/A	The PP Sump Steam Jets are not credited during a PMF.
4. PMP Resistance	N/A	The PP Sump Steam Jets are not credited during a PMP.
5. Explosion/Fire Resistance	N/A	The PP Sump Steam Jets are not credited during an explosion or fire.
6. Single Active Failure Resistance	N/A	The PP Sump Steam Jets are passive devices. Single failure design criteria is not applicable.
7. Equipment Environment Consideration	Yes	There are no unique environmental conditions to which the PP Sump Steam Jets are subjected. The stainless steel piping and jets were designed and manufactured to operate in their current environment.
8. SC Electrical Requirements	N/A	The PP Sump Steam Jets do not require electrical power to perform its safety function.
9. ASME Sect. III or Other Applicable Requirements	Yes	All PP Sump Steam Jets were designed and installed for their systems and functions. Installation was in accordance with DuPont codes and standards equivalent to codes and standards at the time of construction.
10. QA Requirements	Yes	The PP Sump Steam Jets met the DuPont standards of the time. Current QA requirements are met based on the compensatory actions given in Section 4.3.
11. Internal Hazard Resistance	N/A	The PP Sump Steam Jets are not credited to withstand internal hazard events.
12. Maintenance Requirements	Yes	The PP Sump Steam Jets are capable of being maintained.
13. Test Requirements	N/A	The PP Sump Steam Jets are passive design features and not required to be tested.
14. Functionality	Yes	PP Sump Steam Jets are capable of providing steam/air containment.

Table 4.3-2 Safety Class Evaluations (continued)

Design Criteria Assessment Matrix 4.3.9 Pump Tanks		
Design Requirements	**Requirement Met**	**Basis/References**
1. DBE Resistance	Yes	Pump Tanks were evaluated to meet current SC seismic requirements (Ref. 12).
2. DBT Resistance	N/A	Pump Tanks are not credited during a DBT.
3. PMF Resistance	N/A	Pump Tanks are not credited during a PMF.
4. PMP Resistance	N/A	Pump Tanks are not credited during a PMP.
5. Explosion/Fire Resistance	Yes	Pump Tanks are constructed of non-combustible material. The below grade location, inside the reinforced concrete PP, of the Pump Tank provides integrity against an explosion and fire.
6. Single Active Failure Resistance	N/A	Pump Tanks are passive devices. Single failure design criteria is not applicable.
7. Equipment Environment Consideration	Yes	Pump Tanks are constructed of stainless steel.
8. SC Electrical Requirements	N/A	The Pump Tanks do not require electrical power to perform its safety function.
9. ASME Sect. III or Other Applicable Requirements	Yes	Pump Tanks were designed and constructed to DuPont or SRS Standards, which have been determined to be consistent with applicable national consensus codes at the time of construction.
10. QA Requirements	Yes	Pump Tanks met the DuPont standards of the time. Current QA requirements are met based on the compensatory actions given in Section 4.3.
11. Internal Hazard Resistance	N/A	Pump Tanks are not credited to survive an internal hazard event.
12. Maintenance Requirements	Yes	Pump Tanks are capable of being maintained.
13. Test Requirements	N/A	Pump Tanks are passive design features and not required to be tested.
14. Functionality	Yes	Pump Tanks are capable of providing containment of radioactive material and supporting ventilation system operation.

Table 4.3-2 Safety Class Evaluations (continued)

Design Criteria Assessment Matrix 4.3.10 Type I, II, III, IIIA Waste Tanks		
Design Requirements	**Requirement Met**	**Basis/References**
1. DBE Resistance	Yes	Waste Tanks were evaluated to meet current SC seismic requirements (Ref. 12).
2. DBT Resistance	N/A	Waste Tanks are not credited during a DBT. If the Waste Tank structures survive during a Tornado/High Winds Event, they are credited to provide mitigation for an explosion. The Waste Tank structures are credited to provide mitigation for an explosion during a High Winds Event (i.e., the structures are considered to be PC-2 high wind qualified by virtue of its underground location). The Waste Tank structures are not required to withstand a tornado event (i.e., the structures are not required to be PC-3 tornado qualified) since loss of confinement prior to the event would prevent the event (i.e., the flammable vapors would not accumulate).
3. PMF Resistance	N/A	Waste Tanks are not credited during a PMF.
4. PMP Resistance	Yes	Waste Tanks 9, 10, and 11 are credited to withstand flooding events.
5. Explosion/Fire Resistance	Yes	Waste Tanks are constructed of non-combustible material. The below grade location and reinforced concrete construction of the vaults of the secondary containment provides integrity against an explosion and fire.
6. Single Active Failure Resistance	N/A	Waste Tanks are passive devices. Single Failure design criteria is not applicable.
7. Equipment Environment Consideration	Yes	Waste Tanks are constructed of carbon steel and reinforced concrete.
8. SC Electrical Requirements	N/A	The Waste Tanks do not require electrical power to perform its safety function.
9. ASME Sect. III or Other Applicable Requirements	Yes	Waste Tanks were designed and constructed to DuPont or SRS Standards which have been determined to be consistent with applicable national consensus codes at the time of construction.
10. QA Requirements	Yes	Waste Tanks met the DuPont standards of the time. Current QA requirements are met based on the compensatory actions given in Section 4.3.
11. Internal Hazard Resistance	Yes	Waste Tank construction provides reasonable assurance that the concrete vault and carbon steel tank will survive an internal hazard.
12. Maintenance Requirements	Yes	Waste Tanks are capable of being maintained.
13. Test Requirements	N/A	Waste Tanks are passive design features and not required to be tested.
14. Functionality	Yes	Waste Tanks are capable of providing confinement/containment of radioactive material and supporting ventilation system operation.

Table 4.3-2 Safety Class Evaluations (continued)

Design Criteria Assessment Matrix 4.3.11 Type I, II, III, IIIA Waste Tank High Liquid Level Conductivity Probes and Alarms (Excluding Tank 50)		
Design Requirements	**Requirement Met**	**Basis/References (Ref. 13, 40, 42, 46, 47, 48, 49, 50, 51)**
1. DBE Resistance	N/A	HLLCPs and Alarms are not credited during a DBE.
2. DBT Resistance	N/A	HLLCPs and Alarms are not credited during a DBT.
3. PMF Resistance	N/A	HLLCPs and Alarms are not credited during a PMF.
4. PMP Resistance	N/A	HLLCPs and Alarms are not credited during a PMP.
5. Explosion/Fire Resistance	N/A	HLLCPs and Alarms are not credited with surviving a fire or explosion event.
6. Single Active Failure Resistance	Yes	The design of the probe, sensing circuit, power supply, and alarm panel is not fully redundant. Based on the compensatory actions given in Section 4.3.11.3, this DR has been satisfied.
7. Equipment Environment Consideration	Yes	The stainless steel probes and supporting aircraft cable are the only components that are located in areas where they could be exposed to a harsh chemical or radiological environment.
8. SC Electrical Requirements	Yes	The probes, sensing circuit, and alarm panels are powered by the normal plant power distribution system, which does not meet 1E requirements. Additionally, instrument loop circuits/electrical components do not conform to 1E requirements. Based on the compensatory actions given in Section 4.3.11.3, this DR has been satisfied.
9. ASME Sect. III or Other Applicable Requirements	N/A	ASME codes not applicable to the HLLCP and Alarm
10. QA Requirements	Yes	Program controls are in place to ensure that design, maintenance, and operation of this SC/SS equipment is performed in accordance with the Procedure Manual 1Q.
11. Internal Hazard Resistance	N/A	HLLCPs and Alarms are not credited to survive an internal hazard event.
12. Maintenance Requirements	Yes	HLLCPs and Alarms are capable of being maintained, however there are vulnerabilities associated with the system. Based on the compensatory actions given in Section 4.3.11.3, this DR has been satisfied.
13. Test Requirements	Yes	HLLCPs and Alarms are capable of being tested.
14. Functionality	Yes	HLLCPs are capable of detecting a high liquid level condition in the waste tanks.

Table 4.3-2 Safety Class Evaluations (continued)

Design Criteria Assessment Matrix 4.3.12 Type I, II, III, IIIA Waste Tank Purge Ventilation System (Excluding Tank 50)		
Design Requirements	**Requirement Met**	**Basis/References (Ref. 18, 55)**
1. DBE Resistance	N/A	Waste Tank Purge Ventilation Systems are not credited during a DBE.
2. DBT Resistance	N/A	Waste Tank Purge Ventilation Systems are not credited during a DBT.
3. PMF Resistance	N/A	Waste Tank Purge Ventilation Systems are not credited during a PMF.
4. PMP Resistance	N/A	Waste Tank Purge Ventilation Systems are not credited during a PMP.
5. Explosion/Fire Resistance	Yes	Waste Tank Purge Ventilation Systems are susceptible to failure as a result of an explosion or fire event. Based on the compensatory actions given in Section 4.3.12.3, this DR has been satisfied.
6. Single Active Failure Resistance	Yes	Waste Tank Purge Ventilation Systems are susceptible to failure as a result of loss of power or component failure. Based on the compensatory actions given in Section 4.3.12.3, this DR has been satisfied.
7. Equipment Environment Consideration	Yes	Waste Tank Purge Ventilation Systems operate reliably in the environment to which they were designed.
8. SC Electrical Requirements	Yes	Waste Tank Purge Ventilation Systems were not designed or installed to 1E requirements. Based on the compensatory actions given in Section 4.3.12.3, this DR has been satisfied.
9. ASME Sect. III or Other Applicable Requirements	Yes	Waste Tank Purge Ventilation Systems were designed and constructed to DuPont or SRS Standards which have been determined to be consistent with applicable national consensus codes at the time of construction.
10. QA Requirements	Yes	Waste Tank Purge Ventilation Systems met the DuPont standards of the time. Current QA requirements are met based on the compensatory actions given in Section 4.3.
11. Internal Hazard Resistance	Yes	Waste Tank Purge Ventilation Systems are susceptible to failure as a result of internal hazards. Based on the compensatory actions given in Section 4.3.12.3, this DR has been satisfied.
12. Maintenance Requirements	Yes	Waste Tank Purge Ventilation Systems are capable of being maintained.
13. Test Requirements	Yes	Waste Tank Purge Ventilation Systems are capable of being tested.
14. Functionality	Yes	Waste Tank Purge Ventilation Systems are capable of purging flammable vapors, providing an active filtered release path, and providing an active elevated release path (via the exhaust stack).

Table 4.3-2 Safety Class Evaluations (continued)

Design Criteria Assessment Matrix 4.3.13 Waste Tank Ventilation Low Flow Interlock		
Design Requirements	**Requirement Met**	**Basis/References**
1. DBE Resistance	Yes	Waste Tank Ventilation Low Flow Interlock meets SC seismic requirements.
2. DBT Resistance	N/A	Waste Tank Ventilation Low Flow Interlock is not credited during a DBT.
3. PMF Resistance	N/A	Waste Tank Ventilation Low Flow Interlock is not credited during a PMF.
4. PMP Resistance	N/A	Waste Tank Ventilation Low Flow Interlock is not credited during a PMP.
5. Explosion/Fire Resistance	N/A	Waste Tank Ventilation Low Flow Interlock is not credited with surviving a fire or explosion event.
6. Single Active Failure Resistance	Yes	Waste Tank Ventilation Low Flow Interlock meets single active failure resistance.
7. Equipment Environment Consideration	Yes	Waste Tank Ventilation Low Flow Interlock is designed for the environment in which it operates.
8. SC Electrical Requirements	Yes	The Waste Tank Ventilation Low Flow Interlock meets current SC electrical requirements.
9. ASME Sect. III or Other Applicable Requirements	N/A	The Waste Tank Ventilation Low Flow Interlock has electrical loops meeting SC electrical requirements.
10. QA Requirements	Yes	The Waste Tank Ventilation Low Flow Interlock is designed, procured, and installed to SC QA requirements.
11. Internal Hazard Resistance	N/A	The Waste Tank Ventilation Low Flow Interlock is not credited to survive an internal hazard event.
12. Maintenance Requirements	Yes	The Waste Tank Ventilation Low Flow Interlock is capable of being maintained.
13. Test Requirements	Yes	The Waste Tank Ventilation Low Flow Interlock is capable of being tested.
14. Functionality	Yes	The Waste Tank Ventilation Low Flow Interlock is capable of stopping waste tank mixing devices, stopping transfer pumps associated with waste tank recirculation, closing dissolution liquid addition valves, and stopping transfer pumps associated with saltcake interstitial liquid removal on low flow indication or failure of instrument loop control power.

Table 4.3-2 Safety Class Evaluations (continued)

Design Criteria Assessment Matrix
4.3.14 Deleted

Table 4.3-2 Safety Class Evaluations (continued)

Design Criteria Assessment Matrix 4.3.15 Waste Tank Transfer Jets (Including Steam Supply Piping)		
Design Requirements	**Requirement Met**	**Basis/References**
1. DBE Resistance	Yes	Waste Tank Transfer Jets were evaluated to meet current SC seismic requirements (Ref. 12).
2. DBT Resistance	N/A	Waste Tank Transfer Jets are not credited during a DBT.
3. PMF Resistance	N/A	Waste Tank Transfer Jets are not credited during a PMF.
4. PMP Resistance	N/A	Waste Tank Transfer Jets are not credited during a PMP.
5. Explosion/Fire Resistance	N/A	Waste Tank Transfer Jets are not credited during an explosion and fire.
6. Single Active Failure Resistance	N/A	Waste Tank Transfer Jets are passive devices. Single failure design criteria is not applicable.
7. Equipment Environment Consideration	Yes	The environmental conditions the Waste Tank Transfer Jets are exposed to during service will not impact the equipment's ability to perform its intended safety function.
8. SC Electrical Requirements	N/A	The Waste Tank Transfer Jets do not require electrical power to perform its safety function.
9. ASME Sect. III or Other Applicable Requirements	Yes	Waste Tank Transfer Jets were designed and constructed to DuPont or SRS Standards which have been determined to be consistent with applicable national consensus codes at the time of construction.
10. QA Requirements	Yes	Waste Tank Transfer Jets met the DuPont standards of the time. Current QA requirements are met based on the compensatory actions given in Section 4.3.
11. Internal Hazard Resistance	N/A	Waste Tank Transfer Jets are not credited to withstand internal hazard events.
12. Maintenance Requirements	Yes	Waste Tank Transfer Jets are capable of being maintained.
13. Test Requirements	N/A	Waste Tank Transfer Jets are passive design features and not required to be tested.
14. Functionality	Yes	Waste Tank Transfer Jets are capable of steam/air containment.

Table 4.3-2 Safety Class Evaluations (continued)

Design Criteria Assessment Matrix 4.3.16 242-16H and 242-25H Evaporator Cells		
Design Requirements	**Requirement Met**	**Basis/References**
1. DBE Resistance	N/A	Evaporator Cells are not credited during a DBE (Ref. 12).
2. DBT Resistance	Yes	Evaporator Cells were evaluated to meet current SC DBT requirements.
3. PMF Resistance	N/A	Evaporator Cells are not credited during a PMF.
4. PMP Resistance	N/A	Evaporator Cells are not credited during a PMP.
5. Explosion/Fire Resistance	Yes	Evaporator Cells are constructed of non-combustible material. The concrete and stainless steel construction of the boxes provides limited integrity against an explosion and fire.
6. Single Active Failure Resistance	N/A	Evaporator Cells are passive devices. Single failure design criteria is not applicable.
7. Equipment Environment Consideration	Yes	Evaporator Cells are constructed of reinforced concrete and water proofed or lined with stainless steel.
8. SC Electrical Requirements	N/A	The Evaporator Cells do not require electrical power to perform its safety function.
9. ASME Sect. III or Other Applicable Requirements	Yes	Evaporator Cells were designed and constructed to DuPont or SRS standards, which have been determined to be consistent with applicable national consensus codes at the time of construction.
10. QA Requirements	Yes	Evaporator Cells met the DuPont standards of the time. Current QA requirements are met based on the compensatory actions given in Section 4.3.
11. Internal Hazard Resistance	Yes	The reinforced concrete construction of the cells provides integrity against an internal hazard.
12. Maintenance Requirements	Yes	Evaporator Cells are capable of being maintained.
13. Test Requirements	N/A	Evaporator Cells are passive design features and not required to be tested.
14. Functionality	Yes	Evaporator Cells are capable of protecting the equipment contained within the cells, providing containment of radioactive material, and providing confinement of radioactive material.

Table 4.3-2 Safety Class Evaluations (continued)

Design Criteria Assessment Matrix 4.3.17 Waste Tank Chromate Water Coil Siphon Breakers		
Design Requirements	**Requirement Met**	**Basis/References (Ref. 12, 41)**
1. DBE Resistance	Yes	Waste Tank Chromate Water Coil Siphon Breakers were evaluated to meet their seismic requirements.
2. DBT Resistance	N/A	Waste Tank Chromate Water Coil Siphon Breakers are not credited during a DBT.
3. PMF Resistance	N/A	Waste Tank Chromate Water Coil Siphon Breakers are not credited during a PMF.
4. PMP Resistance	N/A	Waste Tank Chromate Water Coil Siphon Breakers are not credited during a PMP.
5. Explosion/Fire Resistance	N/A	Waste Tank Chromate Water Coil Siphon Breakers are not credited with surviving an explosion or a fire event.
6. Single Active Failure Resistance	Yes	There are redundant Waste Tank Chromate Water Coil Siphon Breakers at the required locations.
7. Equipment Environment Consideration	Yes	The Waste Tank Chromate Water Coil Siphon Breakers are addressed by the Severe Weather Response Program to ensure the appropriate compensatory measures are implemented during freezing conditions, or the breakers are declared inoperable.
8. SC Electrical Requirements	N/A	The Waste Tank Chromate Water Coil Siphon Breakers do not require electrical power to perform its safety function.
9. ASME Sect. III or Other Applicable Requirements	Yes	Waste Tank Chromate Water Coil Siphon Breakers were designed and constructed to applicable national consensus codes.
10. QA Requirements	Yes	Waste Tank Chromate Water Coil Siphon Breakers met the applicable QA requirements.
11. Internal Hazard Resistance	N/A	Waste Tank Chromate Water Coil Siphon Breakers are not credited to withstand internal hazard events.
12. Maintenance Requirements	Yes	Waste Tank Chromate Water Coil Siphon Breakers are capable of being maintained.
13. Test Requirements	N/A	Waste Tank Chromate Water Coil Siphon Breakers are capable of being tested.
14. Functionality	Yes	Waste Tank Chromate Water Coil Siphon Breakers are capable of preventing or mitigating a siphon.

Table 4.3-2 Safety Class Evaluations (continued)

Design Criteria Assessment Matrix 4.3.18 242-16H Evaporator Feed Pump Backflow Prevention Devices		
Design Requirements	**Requirement Met**	**Basis/References**
1. DBE Resistance	Yes	Evaporator Feed Pump Backflow Prevention Devices meet seismic requirements.
2. DBT Resistance	N/A	Evaporator Feed Pump Backflow Prevention Devices are not credited during a DBT.
3. PMF Resistance	N/A	Evaporator Feed Pump Backflow Prevention Devices are not credited during a PMF.
4. PMP Resistance	N/A	Evaporator Feed Pump Backflow Prevention Devices are not credited during a PMP.
5. Explosion/Fire Resistance	N/A	Evaporator Feed Pump Backflow Prevention Devices are not credited with surviving an explosion or a fire event.
6. Single Active Failure Resistance	Yes	There are redundant Evaporator Feed Pump Backflow Prevention Devices at the required locations.
7. Equipment Environment Consideration	Yes	The Evaporator Feed Pump Backflow Prevention Devices are addressed by the Severe Weather Response Program to ensure they remain operable during freezing conditions, or the devices are declared inoperable.
8. SC Electrical Requirements	N/A	The Evaporator Feed Pump Backflow Prevention Devices do not require electrical power to perform its safety function.
9. ASME Sect. III or Other Applicable Requirements	Yes	Evaporator Feed Pump Backflow Prevention Devices were designed and constructed to applicable national consensus codes.
10. QA Requirements	Yes	Evaporator Feed Pump Backflow Prevention Devices meet the applicable QA requirements.
11. Internal Hazard Resistance	N/A	Evaporator Feed Pump Backflow Prevention Devices are not credited to withstand internal hazard events.
12. Maintenance Requirements	Yes	Evaporator Feed Pump Backflow Prevention Devices are capable of being maintained.
13. Test Requirements	Yes	Evaporator Feed Pump Backflow Prevention Devices are capable of being tested.
14. Functionality	Yes	Evaporator Feed Pump Backflow Prevention Devices are capable of mitigating an above-ground release of radioactive material.

Table 4.3-2 Safety Class Evaluations (continued)

Design Criteria Assessment Matrix 4.3.19 Type I, II, III, IIIA Waste Tank Annulus Transfer Jets (Including Steam Supply Piping)		
Design Requirements	**Requirement Met**	**Basis/References**
1. DBE Resistance	Yes	Type I, II, III, IIIA Waste Tank Annulus Transfer Jets were evaluated to meet current SC seismic requirements (Ref. 12).
2. DBT Resistance	N/A	Type I, II, III, IIIA Waste Tank Annulus Transfer Jets are not credited during a DBT.
3. PMF Resistance	N/A	Type I, II, III, IIIA Waste Tank Annulus Transfer Jets are not credited during a PMF.
4. PMP Resistance	N/A	Type I, II, III, IIIA Waste Tank Annulus Transfer Jets are not credited during a PMP.
5. Explosion/Fire Resistance	N/A	Type I, II, III, IIIA Waste Tank Annulus Transfer Jets are not credited during an explosion and fire.
6. Single Active Failure Resistance	N/A	Type I, II, III, IIIA Waste Tank Annulus Transfer Jets are passive devices. Single failure design criteria is not applicable.
7. Equipment Environment Consideration	Yes	The environmental conditions the Type I, II, III, IIIA Waste Tank Annulus Transfer Jets are exposed to during service will not impact the equipment's ability to perform its intended safety function.
8. SC Electrical Requirements	N/A	The Type I, II, III, IIIA Waste Tank Annulus Transfer Jets do not require electrical power to perform its safety function.
9. ASME Sect. III or Other Applicable Requirements	Yes	Type I, II, III, IIIA Waste Tank Annulus Transfer Jets were designed and constructed to DuPont or SRS Standards which have been determined to be consistent with applicable national consensus codes at the time of construction.
10. QA Requirements	Yes	Type I, II, III, IIIA Waste Tank Annulus Transfer Jets met the DuPont standards of the time. Current QA requirements are met based on the compensatory actions given in Section 4.3.
11. Internal Hazard Resistance	N/A	Type I, II, III, IIIA Waste Tank Annulus Transfer Jets are not credited to withstand internal hazard events.
12. Maintenance Requirements	Yes	Type I, II, III, IIIA Waste Tank Annulus Transfer Jets are capable of being maintained.
13. Test Requirements	N/A	Type I, II, III, IIIA Waste Tank Annulus Transfer Jets are passive design features and not required to be tested.
14. Functionality	Yes	Type I, II, III, IIIA Waste Tank Annulus Transfer Jets are capable of steam/air containment.

Table 4.4-1 Safety Significant Structures, Systems, and Components

Functional Class	Chapter 4 SS SSC	Chapter 3 Accident Reference (Note 1)	Safety Function	Functional Requirement (Note 1)	TSR Coverage
SS	4.4.1 Transfer Pump Electrical Breaker/Disconnect	Transfer Facility Explosions Pump Pit and Pump Tank Explosion Transfer Error/SMP Waste Release Seismic Event	Minimize the radiological material release to the environment by providing for manual shutdown of the transfer pump and evaporator feed pump.	Capable of interrupting power to the transfer pump or evaporator feed pump during normal operations and following a Seismic Event.	Design Feature
SS	4.4.2 Waste Tank (Including Annulus) Transfer Jet Steam/Air Isolation Valve	Transfer Facility Explosion Pump Pit and Pump Tank Explosion Transfer Error/SMP Waste Release Seismic Event	Minimize the radiological material release to the environment by providing for manual shutoff of the transfer jet motive supply.	Capable of shutting off the motive steam/air to the transfer jet during normal operations and following a Seismic Event.	Design Feature

Table 4.4-1 Safety Significant Structures, Systems, and Components (continued)

Functional Class	Chapter 4 SS SSC	Chapter 3 Accident Reference (Note 1)	Safety Function	Functional Requirement (Note 1)	TSR Coverage
SS	4.4.3 Transfer Line Jacket/Encasement	Transfer Line and Transfer Line Jacket/Encasement Explosions Transfer Facility Explosions Transfer Error/SMP Waste Release Tornado/High Winds Event Seismic Event	Provide passive containment (confinement for encasements) of liquid waste in order to minimize the radioactive hazardous material releases to the environment and channel core pipe leakage to a leak detection location. The transfer line jacket also provides airborne waste confinement following a transfer line core pipe waste release.	Maintain confinement boundary integrity and channel core pipe leakage to a leak detection location during normal operations (jackets/encasements), and during and following a Seismic Event (encasements that drain to the H-Area Catch Tank only).	Design Feature
SS	4.4.4 DB (Including High Point Flush Pit) Conductivity Probes and High Level Alarm	Transfer Facility Explosions Transfer Error/SMP Waste Release	Provide a control room alarm, upon the detection of a liquid waste level greater than the initial waste volumes given in Chapter 3, to minimize the release of radioactive material to the environment, and to ensure that the amount of waste in the box does not produce a flammable vapor concentration. Alarms are used to initiate operator actions needed to limit the quantity of radiological material in a DB or High Point Flush Pit.	DB (Including High Point Flush Pit) Conductivity Probe and High Level Alarm is required during normal operations.	LCO Required
SS	4.4.5 DB Ventilation System (HDB-6 and HDB-7)	Transfer Facility Explosions Aerosolization Events	Limit the concentration of flammable vapors to less than or equal to 25% of the LFL conditions in the DB by maintaining a continuous purge flow. Provide a filtered release path to minimize the release of radiological material to the environment.	DB Ventilation System is required during normal operations.	LCO Required

Table 4.4-1 Safety Significant Structures, Systems, and Components (continued)

Functional Class	Chapter 4 SS SSC	Chapter 3 Accident Reference (Note 1)	Safety Function	Functional Requirement (Note 1)	TSR Coverage
SS	4.4.6 HDB-4 Passive Vent	Aerosolization Events	Provide a filtered release path to minimize the release of radiological material to the environment.	Required during normal operations.	Design Feature
SS	4.4.7 VB (Including Drain VB) Conductivity Probes and High Level Alarm	Transfer Facility Explosions Transfer Error/SMP Waste Release	Provide a control room alarm, upon the detection of a liquid waste level greater than the initial waste volumes given in Chapter 3, to minimize the release of radioactive material to the environment, and to limit flammable vapor accumulation in the VB. Alarms are used to initiate operator actions needed to limit the quantity of radiological material in a VB.	VB (including Drain VB) Conductivity Probe and High Level Alarms are required during normal operations.	LCO Required
SS	4.4.8 PP Conductivity Probes and High Level Alarm	Transfer Error/SMP Waste Release	Provide a control room alarm, upon detection of a liquid waste level greater than the initial waste volumes given in Chapter 3, to minimize the release of radioactive material to the environment and to ensure that the amount of waste in the PP does not produce a flammable vapor concentration. Alarms are used to initiate operator actions needed to limit the quantity of radiological material in a PP.	PP Conductivity Probes and High Level Alarms are required during normal operations.	LCO Required

Table 4.4-1 Safety Significant Structures, Systems, and Components (continued)

Functional Class	Chapter 4 SS SSC	Chapter 3 Accident Reference (Note 1)	Safety Function	Functional Requirement (Note 1)	TSR Coverage
SS	4.4.9 Pump Pit/Pump Tank Ventilation System with Passive Vents	Pump Pit and Pump Tank Explosion Transfer Error/SMP Waste Release Aerosolization Events Waste Tank/Pump Tank Overheating Tornado/High Winds Event (Passive Vents only) Seismic Event (Passive Vents only) Wildland Fire (Passive Vents only) Loss of Offsite Power (Passive Vents only)	Control the concentration of flammable vapors to less than or equal to 25% of the LFL conditions in the pump tanks by maintaining a minimum, continuous, measured purge flow (measured by a flow instrument). Provide passive confinement capabilities and a filtered release path to minimize the release of radiological material to the environment. Passive Vents (without an operating fan) extends the time to reach LFL, when the Pump Tank is not receiving steam jetted transfers, thereby providing sufficient time to restore active ventilation before exceeding flammable conditions. Provide an active elevated release path to ensure adequate dispersion of potential chemical vapors.	PP/Pump Tank Ventilation Systems are required during normal operations. Passive Vents are required during normal operations, and during and following a Seismic Event, Tornado/High Winds Event, or during an external fire event.	Design Feature for Passive Vents LCO Required for ventilation
SS	4.4.10 HDB-8 PVV System	Pump Pit and Pump Tank Explosion Transfer Error/SMP Waste Release Aerosolization Events Waste Tank/Pump Tank Overheating Seismic Event Loss of Offsite Power	Limit the concentration of flammable vapors to less than or equal to 25% of the LFL conditions in the pump tank by maintaining a minimum, continuous, measured purge flow (by use of a flow instrument). The non-operating (standby) PVV exhaust fan is required to automatically start on ventilation low flow Maintain passive confinement capabilities and provide a filtered release path to minimize the potential for a release of radiological material to the environment.	HDB-8 PVV System is required during normal operations and following a Seismic Event.	LCO Required

Table 4.4-1 Safety Significant Structures, Systems, and Components (continued)

Functional Class	Chapter 4 SS SSC	Chapter 3 Accident Reference (Note 1)	Safety Function	Functional Requirement (Note 1)	TSR Coverage
SS	4.4.11 HDB-8 DG	Pump Pit and Pump Tank Explosion Seismic Event Loss of Offsite Power	Provide a backup power supply to the HDB-8 PVV System Fans on a loss of the normal power supply. Provide backup power to control the operation of the PVV system fans and associated inlet dampers.	Standby DG is required during normal operations and following a Seismic Event.	LCO Required
SS	4.4.12 LDB/ MLDB/LPSs/COPs	Transfer Line and Transfer Line Jacket/Encasement Explosions Transfer Facility Explosions Transfer Error/SMP Waste Release	LDBs/MLDBs/LPSs provide passive containment to channel core pipe leakage to a leak detection location. LDBs/MLDBs/LPSs/COPs provide airborne waste confinement.	LDBs/MLDBs/LPSs/COPs are required during normal operations.	Design Feature
SS	4.4.13 LDB/ MLDB/LPSs Conductivity Probes and High Level Alarm	Transfer Facility Explosions Transfer Error/SMP Waste Release	Provide a control room alarm upon detection of a liquid waste to minimize the release of radioactive material to the environment. Alarms are used to initiate operator actions needed to limit the quantity of radiological material in a LDB/MLDB/LPS.	LDB/MLDB/LPS Conductivity Probes and High Level Alarms are required during normal operations.	LCO Required
SS	4.4.14 FPT-1 PTA Liquid Level Interlock	Aerosolization Events	Minimize the potential for a release of radioactive material to the environment by interlocking off the air supply to the PTA on tank low level.	Liquid Level Interlock is required during normal operations.	LCO Required
SS	4.4.15 FPT-1 PTA Air Supply PRV	Aerosolization Events	Minimize the release of radioactive material to the environment by restricting the jet suction air supply pressure.	Air Supply PRV required during normal operations.	Design Feature

Table 4.4-1 Safety Significant Structures, Systems, and Components (continued)

Functional Class	Chapter 4 SS SSC	Chapter 3 Accident Reference (Note 1)	Safety Function	Functional Requirement (Note 1)	TSR Coverage
SS	4.4.16 LDB Drain Cell	Transfer Facility Explosions Transfer Error/SMP Waste Release Tornado/High Winds Event Seismic Event	Provide passive confinement to mitigate a release of radioactive material to the environment.	Provides containment during normal operations, and during and following a Seismic Event.	Design Feature
SS	4.4.17 ARMs with Control Room Notification	Transfer Error/SMP Waste Release Aerosolization Events Waste Tank Explosion (SMP Column Explosion)	Provide control room notification (alarm or equivalent control room notification by local personnel) upon detection of higher than normal radiation levels in areas associated with waste transfers and SMP operations to mitigate a release of radioactive material to the environment.	ARMs with Control Room Notification are required during normal operations. Placed in accordance with the ARM Location Program.	LCO Required
SS	4.4.18 Influent Manual Isolation Valves	Transfer Error/SMP Waste Release	Provide a means of stopping non-waste liquid additions to a waste tank or pump tank (for transfers to a waste tank greater than or equal to 15,000 gallons, or transfers capable of continuous non-waste makeup flow) to minimize the release of radioactive material to the environment from an overflow event.	Influent Manual Isolation Valves are required during normal operations.	Design Feature
SS	4.4.19 Type IIIA Waste Tank CRW Cooling Coils (Excluding Waste Tank 35)	Waste Tank Siphon/Pump-Out Seismic Event	Prevent a release of radioactive material to the environment by preventing waste tank siphon or pump-out conditions.	Maintain pressure boundary integrity of the CRW cooling coils during normal operations, and during and following a Seismic Event.	Design Feature

Table 4.4-1 Safety Significant Structures, Systems, and Components (continued)

Functional Class	Chapter 4 SS SSC	Chapter 3 Accident Reference (Note 1)	Safety Function	Functional Requirement (Note 1)	TSR Coverage
SS	4.4.20 Waste Tank CRW Header Isolation Valves	Waste Tank Siphon/Pump-Out Seismic Event	Mitigate a release of radioactive material to the environment by providing a means of stopping a siphon or pump-out from the Waste Tanks.	Valves are required during normal operations (for Waste Tanks 13, 14 (when connected to the CRW System), 15 (when connected to the CRW System), 25, 26, 27, 28, 36, 37, 38, 39, 40, 41, 42, 43, 44, 45, 46, 47, 48, 49, 50, and 51 and following a Seismic Event (for Waste Tanks 13, 14 (when connected to the CRW System), 15 (when connected to the CRW System), 25, 26, 27, 28, 29, 31, 32, 33, 34, 35, 36, 37, 38, 39, 40, 41, 42, 43, 44, 45, 46, 47, 48, 49, 50, and 51.	Design Feature
	4.4.21 Deleted				
SS	4.4.22 Waste Tank 30 CRW Coil Isolation Valves	Waste Tank Siphon/Pump-Out Seismic Event	Mitigate a release of radioactive material to the environment by providing a means of stopping a siphon or pump-out from Waste Tank 30.	Valves are required during normal operations and following a Seismic Event.	Design Feature
SS	4.4.23 Waste Tanks 29, 31, 32, 33, 34, and 35 Type III CRW Cooling Coils	Waste Tank Siphon/Pump-Out	Prevent a release of radioactive material to the environment by maintaining pressure boundary integrity of cooling coils to prevent waste tank siphon or pump-out conditions.	Pressure boundary integrity of Waste Tanks 29, 31, 32, 33, 34, and 35 CRW cooling coils required during normal operations.	Design Feature

Table 4.4-1 Safety Significant Structures, Systems, and Components (continued)

Functional Class	Chapter 4 SS SSC	Chapter 3 Accident Reference (Note 1)	Safety Function	Functional Requirement (Note 1)	TSR Coverage
SS	4.4.24 Type IV Waste Tanks	Aerosolization Events Waste Tank Explosion Waste Tank/Pump Tank Overheating Waste Tank Wall Failure Tornado/High Winds Event Seismic Event Wildland Fire Loss of Offsite Power	Provide passive containment of the tank contents to prevent a release of liquid radiological material to the environment and provide passive confinement to mitigate an airborne radiological material release. Support ventilation system operation.	Maintain structural integrity (tank top only for seismic) during normal operation, during an external fire event, during and following a Tornado/High Winds Event, and during and following a Seismic Event.	Design Feature

Table 4.4-1 Safety Significant Structures, Systems, and Components (continued)

Functional Class	Chapter 4 SS SSC	Chapter 3 Accident Reference (Note 1)	Safety Function	Functional Requirement (Note 1)	TSR Coverage
SS	4.4.25 Tank 50 and Type IV Waste Tank Purge Ventilation Systems	Aerosolization Events Waste Tank Explosion Waste Tank/Pump Tank Overheating	(Type IV Waste Tanks) Provide sufficient tank purge to maintain bulk vapor space less than or equal to 25% of the LFL. (Tank 50) Provide sufficient tank purge to maintain hydrogen concentration in the bulk vapor space less than or equal to 3.8% of the LFL. (Tank 50 and Type IV Waste Tanks) For free supernate removal activities (in conjunction with the Gas Release Program), maintains minimum time to LFL. (Tank 50 and Type IV Waste Tanks) For spontaneous liberation events and other activities (sludge agitation, bulk saltcake dissolution, and saltcake interstitial liquid removal), minimizes potential for flammable vapor concentration by providing a continuous purge of the tank vapor space. (Type IV Waste Tanks) For activities (sludge agitation, bulk saltcake dissolution, and saltcake interstitial liquid removal) that exceed Gas Release Criteria, provides sufficient tank purge (in conjunction with the Gas Release Program) to maintain bulk vapor space hydrogen concentration less than or equal to the SAV and maintain minimum time to LFL. Provide an active filtered release path for potential radiological releases from the waste tank vapor space.	Waste Tank Purge Ventilation Systems are required during normal operations.	LCO Required

Table 4.4-1 Safety Significant Structures, Systems, and Components (continued)

Functional Class	Chapter 4 SS SSC	Chapter 3 Accident Reference (Note 1)	Safety Function	Functional Requirement (Note 1)	TSR Coverage
SS	4.4.26 Waste Tank Annulus	Transfer Error/SMP Waste Release Aerosolization Events Waste Tank/Pump Tank Overheating Waste Tank Annulus Explosion Waste Tank Wall Failure Tornado/High Winds Event Seismic Event Wildland Fire Loss of Offsite Power	Provide passive confinement of the annulus contents to prevent a release of radiological material to the environment and to mitigate an airborne radiological material release. Support ventilation system operation. Containment features supports operation of the waste tanks annulus conductivity probes, excluding Tank 50.	Maintain confinement and structural integrity during normal operations, during an external fire event, during and following a Tornado/High Winds Event, and during and following a Seismic Event.	Design Feature
SS	4.4.27 Type I, II Waste Tank Annulus Ventilation Systems	Waste Tank Annulus Explosion Waste Tank Wall Failure	Maintains the concentration of flammable vapors in the waste tank annulus bulk vapor space accounting for radiolytic and corrosion induced hydrogen generation. Provides an active filtered release path for potential radiological releases from the waste tank annulus vapor space. When not operating, the ventilation system integrity provides airborne confinement of radiological material to minimize a radioactive release to the environment. Provides an active elevated release path, to ensure adequate dispersion of potential chemical vapors from the waste tank annulus vapor space.	The Waste Tank Annulus Ventilation System is required during normal operations.	LCO Required

Table 4.4-1 Safety Significant Structures, Systems, and Components (continued)

Functional Class	Chapter 4 SS SSC	Chapter 3 Accident Reference (Note 1)	Safety Function	Functional Requirement (Note 1)	TSR Coverage
SS	4.4.28 Type I, II, III, IIIA Waste Tank Annulus Conductivity Probes and High Level Alarms (Excluding Tank 50)	Transfer Error/SMP Waste Release (Waste Tank Annulus Spill due to Core Pipe Failure) Waste Tank Annulus Explosion Tornado/High Winds Event Seismic Event Wildland Fire Loss of Offsite Power	Provide a control room alarm upon detection of liquid waste level greater than the initial waste volume given in Chapter 3 to prevent a release of radioactive material to the environment. Alarms are used to initiate operator actions to mitigate the event and limit the quantity of radiological material in an annulus.	The Waste Tank Annulus Conductivity Probes and High Level Alarms are required during normal operations.	LCO Required
SS	4.4.29 Waste Tank Transfer Pump/Jet/SMP Riser	Transfer Error/SMP Waste Release Seismic Event	Mitigate the release of a radiological material to the environment by providing airborne waste confinement following a primary containment waste release into the riser, and also provides containment of liquid waste by channeling the liquid waste to the riser leak detection system or drain path.	Waste Tank Risers containment is required during normal operations. SMP Riser containment is required during normal operations, and during and following a Seismic Event.	Design Feature
SS	4.4.30 Waste Tank Transfer Pump/ Jet Riser Conductivity Probes and High Level Alarms	Transfer Error/SMP Waste Release	Provide a control room alarm upon indication of liquid waste for those risers that contain liquid waste lines and do not have credited drains to minimize the release of radioactive material to the environment. Alarms are used to initiate operator actions needed to limit the quantity of radiological material in a riser.	Waste Tank Transfer Pump/Jet Riser Conductivity Probes and High Level Alarms are required during normal operations.	LCO Required

Table 4.4-1 Safety Significant Structures, Systems, and Components (continued)

Functional Class	Chapter 4 SS SSC	Chapter 3 Accident Reference (Note 1)	Safety Function	Functional Requirement (Note 1)	TSR Coverage
SS	4.4.31 Tank 50 and Type IV Waste Tank HLLCPs and Alarms	Transfer Error/SMP Waste Release Aerosolization Events Waste Tank Explosion Waste Tank Annulus Explosion Waste Tank/Pump Tank Overheating Waste Tank Wall Failure Tornado/High Winds Event Seismic Event Wildland Fire Loss of Offsite Power	Maintain flammability control of the tank vapor space by providing control room alarm of a waste tank high level condition. Prevent the release of radiological material to the environment (overflow). Prevent waste tank explosion by limiting fill levels as an initial condition. Alarms are used to initiate operator actions needed to limit the amount of waste in a waste tank. Provide control room alarm for a waste tank high level condition to protect tank wall integrity requirements, waste tank wall failure, tank wall exposed area conditions, and waste tank annulus explosion by limiting fill levels as an initial condition.	HLLCPs and alarms are required during normal operations.	LCO Required
SS	4.4.32 Waste Tank Hydrogen Monitor and High Hydrogen Concentration Interlock	Waste Tank Explosion Seismic Event	Provide for continuous hydrogen monitoring of the waste tank bulk vapor space to protect the hydrogen concentration SAV determined in the Flammability Control Program. Provide interlock to stop waste tank mixing devices, stop transfer pumps associated with waste tank recirculation, close the dissolution liquid addition valves, and stop transfer pumps associated with saltcake interstitial liquid removal when high hydrogen concentration or failure of the instrument loop control power occurs.	The Waste Tank Hydrogen Monitor and High Hydrogen Concentration Interlock are required during normal operations, and during and following a Seismic Event.	LCO Required

Table 4.4-1 Safety Significant Structures, Systems, and Components (continued)

Functional Class	Chapter 4 SS SSC	Chapter 3 Accident Reference (Note 1)	Safety Function	Functional Requirement (Note 1)	TSR Coverage
SS	4.4.33 H-Area Catch Tank and Catch Tank Encasement	Transfer Facility Explosions Transfer Error/SMP Waste Release Tornado/High Winds Event Seismic Event	Provide passive containment (confinement for encasement) to minimize the release of radioactive material to the environment.	Containment is required during normal operations, and during and following a Seismic Event.	Design Feature
	4.4.34 Deleted				
SS	4.4.35 242-16H and 242-25H Evaporator Steam Tube Bundles	Evaporator Overpressure Seismic Event	Provide passive containment of steam and air to prevent leakage from the tube bundle.	Evaporator Tube Bundle integrity is required during normal operations, and during and following a Seismic Event.	Design Feature
SS	4.4.36 242-16H and 242-25H Evaporator Lance Air Supply Line Orifices	Evaporator Overpressure Seismic Event	Limit the amount of lance air supplied to the evaporator bottoms concurrent with a tube bundle rupture in order to minimize the release of radioactive material to the environment.	Lance Air Supply Line Orifices are required during normal operations, and during and following a Seismic Event.	Design Feature
SS	4.4.37 242-16H and 242-25H Evaporator Lance Steam Supply Line Orifices	Evaporator Overpressure Seismic Event	Limit the amount of lance steam supplied to the evaporator bottoms concurrent with a tube bundle rupture in order to minimize the release of radioactive material to the environment.	Lance Steam Supply Line Orifices are required during normal operations, and during and following a Seismic Event.	Design Feature
SS	4.4.38 242-16H Evaporator Tube Bundle Steam Pressure Control Valve and Tube Bundle Steam Pressure Relief Valve	Evaporator Overpressure Seismic Event	Mitigate an evaporator over pressurization condition and a subsequent radiological material release to the environment.	242-16H Evaporator Tube Bundle Steam PCV is required during normal operations, and during and following a Seismic Event. 242-16H Evaporator Tube Bundle Steam PRV is required during and following a Seismic Event.	Design Feature

Table 4.4-1 Safety Significant Structures, Systems, and Components (continued)

Functional Class	Chapter 4 SS SSC	Chapter 3 Accident Reference (Note 1)	Safety Function	Functional Requirement (Note 1)	TSR Coverage
SS	4.4.39 242-25H Evaporator Lance Steam Pressure Control Valve and Lance Steam PRV	Evaporator Overpressure Seismic Event	Mitigates an evaporator over pressurization condition and a subsequent radiological material release to the environment.	Evaporator Lance Steam PCV and Lance Steam PRV are required during normal operations, and during and following a Seismic Event.	Design Feature
SS	4.4.40 Submersible Mixer Pump Column Pressure Boundary	Waste Tank Explosion (SMP Column Explosion) Seismic Event	Prevent waste from entering the SMP column and subsequent hydrogen buildup and explosion causing a radiological material release to the environment.	SMP Column Pressure Boundary integrity is required during normal operations, and during and following a Seismic Event.	Design Feature
SS	4.4.41 Submersible Mixer Pump Flush/Motor Pressure Boundary	Transfer Error/SMP Waste Release Waste Tank Explosion (SMP Column Explosion) Seismic Event	Prevent waste from entering the SMP column and subsequent radiological material release to the environment from a spill, spray, or an explosion.	SMP Flush/Motor Pressure Boundary integrity is required during normal operations, and during and following a Seismic Event.	Design Feature
SS	4.4.42 Submersible Mixer Pump Riser Conductivity Probe Interlock	Transfer Error/SMP Waste Release Seismic Event	Interlock off the SMP in event of high level in the SMP riser to minimize radiological material from overflowing the SMP riser and being released to the environment.	SMP Riser Conductivity Probe Interlocks are required during normal operations, and during and following a Seismic Event.	LCO Required
SS	4.4.43 Submersible Mixer Pump Electrical Breaker/Disconnect	Transfer Error/SMP Waste Release Aerosolization Events Seismic Event	Minimize the radiological material release to the environment by providing for manually securing power to the SMP. Also used to secure power to minimize the potential for an explosion following a Seismic Event.	Capable of interrupting power to the SMP during normal operations and following a Seismic Event.	Design Feature
SS	4.4.44 Tank 50 Waste Temperature Monitoring	Waste Tank Explosion	Provide local indication of average bulk waste temperature to verify initial conditions for maintaining flammable vapor concentration in the tank are protected.	Tank 50 Waste Temperature Monitoring is required during normal operations.	LCO Required

Table 4.4-1 Safety Significant Structures, Systems, and Components (continued)

Functional Class	Chapter 4 SS SSC	Chapter 3 Accident Reference (Note 1)	Safety Function	Functional Requirement (Note 1)	TSR Coverage
	4.4.45 Deleted				
	4.4.46 Deleted				
SS	4.4.47 242-16H and 242-25H Evaporator Mercury Monitoring	Chemical Release	Provide local indication of mercury quantity in the MRT and associated collection system to verify mercury inventory initial conditions are protected.	Evaporator Mercury Monitoring is required during normal operations.	LCO Required
Note 1: Conditional aspects (including those related to process area applicability for FC of the SSC) are not reflected on this table for the Chapter 3 Accident Reference and Functional Requirement columns. Refer to the applicable subsection in Section 4.4 or Chapter 3.					

Table 4.4-2 Safety Significant Evaluations

Design Criteria Assessment Matrix 4.4.1 Transfer Pump Electrical Breakers/Disconnects		
Design Requirements	**Requirement Met**	**Basis/References (Ref. 17)**
1. NPH Resistance	Yes	The Transfer Pump Electrical Breakers/Disconnects were evaluated to meet current SS seismic requirements (Ref. 12, 38). They are not credited for other NPH events.
2. Equipment Environment Consideration	Yes	The environmental conditions the Transfer Pump Electrical Breakers/Disconnects are exposed to during service will not impact the equipment's ability to perform its intended safety function.
3. Functionality	Yes	The Transfer Pump Electrical Breakers/Disconnects met the DuPont standards of the time. Current QA requirements are met based on the compensatory actions given in Section 4.4.
4. Test Requirements	Yes	The Transfer Pump Electrical Breakers/Disconnects are capable of being tested.
5. Maintenance Requirements	Yes	The Transfer Pump Electrical Breakers/Disconnects are capable of being maintained.

Design Criteria Assessment Matrix 4.4.2 Waste Tank (Including Annulus) Transfer Jet Steam/Air Isolation Valves		
Design Requirements	**Requirement Met**	**Basis/References (Ref. 17)**
1. NPH Resistance	Yes	The Waste Tank (including Annulus) Transfer Jet Steam/Air Isolation Valves were evaluated to meet current SS seismic requirements (Ref. 12). They are not credited for other NPH events.
2. Equipment Environment Consideration	Yes	The environmental conditions the Waste Tank (including Annulus) Transfer Jet Steam/Air Isolation Valves are exposed to during service will not impact the equipment's ability to perform its intended safety function.
3. Functionality	Yes	The Waste Tank (including Annulus) Transfer Jet Steam/Air Isolation Valves met the DuPont standards of the time. Current QA requirements are met based on the compensatory actions given in Section 4.4.
4. Test Requirements	Yes	The Waste Tank (including Annulus) Transfer Jet Steam/Air Isolation Valves are capable of being tested.
5. Maintenance Requirements	Yes	The Waste Tank (including Annulus) Transfer Jet Steam/Air Isolation Valves are capable of being maintained.

Table 4.4-2 Safety Significant Evaluations (continued)

Design Criteria Assessment Matrix 4.4.3 Transfer Line Jackets/Encasements		
Design Requirements	**Requirement Met**	**Basis/References**
1. NPH Resistance	Yes	The Transfer Line Jackets are not credited for NPH events. The Transfer Line Encasement structures that drain to the H-Area Catch Tank were evaluated to meet current SS seismic qualification (Ref. 12). If the Transfer Line Encasement structures that drain to the H-Area Catch Tank survive during a Tornado/High Winds Event, they are credited to provide mitigation for an explosion. The Transfer Line Encasement structures are not required to withstand high winds (i.e., the structures are not required to be PC-2 high wind qualified) since loss of confinement prior to the event would prevent the event (i.e., the flammable vapors would not accumulate). They are not credited for other NPH events.
2. Equipment Environment Consideration	Yes	The environmental conditions the Transfer Line Jackets/Encasements are exposed to during service will not impact the equipment's ability to perform its intended safety function.
3. Functionality	Yes	The Transfer Line Jackets/Encasements met the DuPont standards of the time. Current QA requirements are met based on the compensatory actions given in Section 4.4.
4. Test Requirements	N/A	The Transfer Line Jackets/Encasements are passive design features and not required to be tested.
5. Maintenance Requirements	Yes	The Transfer Line Jackets/Encasements are capable of being maintained.

Table 4.4-2 Safety Significant Evaluations (continued)

Design Criteria Assessment Matrix 4.4.4 Diversion Box (Including High Point Flush Pit) Conductivity Probes and High Level Alarms		
Design Requirements	**Requirement Met**	**Basis/References (Ref. 15, 39, 40, 52)**
1. NPH Resistance	N/A	The DB (Including High Point Flush Pit) Conductivity Probes and High Level Alarms are not credited for NPH events.
2. Equipment Environment Consideration	Yes	The stainless steel probes and supporting insulated aircraft cable are the only components that are located inside the DBs where they could be exposed to a harsh chemical or radiological environment.
3. Functionality	Yes	The DB (Including High Point Flush Pit) Conductivity Probes and High Level Alarms were designed to perform their current requirements with a high degree of reliability, however there are vulnerabilities associated with the system. Based on the compensatory actions given in Section 4.4.4.3, this DR has been satisfied.
4. Test Requirements	Yes	The DB (Including High Point Flush Pit) Conductivity Probes and High Level Alarms are capable of being tested.
5. Maintenance Requirements	Yes	The DB (Including High Point Flush Pit) Conductivity Probes and High Level Alarms are capable of being maintained, however there are vulnerabilities associated with systems utilizing fiber optics. Based on the compensatory actions given in Section 4.4.4.3, this DR has been satisfied.

Design Criteria Assessment Matrix 4.4.5 Diversion Box Ventilation Systems (HDB-6 and HDB-7)		
Design Requirements	**Requirement Met**	**Basis/References (Ref. 23, 33)**
1. NPH Resistance	N/A	The DB Ventilation Systems are not credited for NPH events.
2. Equipment Environment Consideration	Yes	The environmental conditions the DB Ventilation Systems are exposed to during service will not impact the equipment's ability to perform its intended safety function.
3. Functionality	Yes	The DB Ventilation Systems meet the SS QA requirements, however there are vulnerabilities associated with the system. Based on the compensatory actions given in Section 4.4.5.3, this DR has been satisfied.
4. Test Requirements	Yes	The DB Ventilation Systems are capable of being tested.
5. Maintenance Requirements	Yes	The DB Ventilation Systems are capable of being maintained.

Table 4.4-2 Safety Significant Evaluations (continued)

Design Criteria Assessment Matrix 4.4.6 HDB-4 Passive Vent		
Design Requirements	**Requirement Met**	**Basis/References**
1. NPH Resistance	N/A	The HDB-4 Passive Vent is not credited for NPH events.
2. Equipment Environment Consideration	Yes	The environmental conditions the HDB-4 Passive Vent is exposed to during service will not impact the equipment's ability to perform its intended safety function.
3. Functionality	Yes	The HDB-4 Passive Vent does not meet the reliability and SS QA requirements. Current QA requirements are met based on the compensatory actions given in Section 4.4.
4. Test Requirements	N/A	The HDB-4 Passive Vent is a passive design feature and not required to be tested.
5. Maintenance Requirements	Yes	The HDB-4 Passive Vent is capable of being maintained.

Design Criteria Assessment Matrix 4.4.7 Valve Box (Including Drain Valve Box) Conductivity Probes and High Level Alarms		
Design Requirements	**Requirement Met**	**Basis/References (Ref. 15, 39, 40, 52)**
1. NPH Resistance	N/A	The VB Conductivity Probes and High Level Alarms are not credited for NPH events.
2. Equipment Environment Consideration	Yes	The stainless steel probes and supporting insulated aircraft cable are the only components that are located inside the VBs where they could be exposed to a harsh chemical or radiological environment.
3. Functionality	Yes	The VB Conductivity Probes and High Level Alarms were designed to perform their current requirements with a high degree of reliability, however there are vulnerabilities associated with the system. Based on the compensatory actions given in Section 4.4.7.3, this DR has been satisfied.
4. Test Requirements	Yes	The VB Conductivity Probes and High Level Alarms are capable of being tested.
5. Maintenance Requirements	Yes	The VB Conductivity Probes and High Level Alarms are capable of being maintained, however there are vulnerabilities associated with systems utilizing fiber optics. Based on the compensatory actions given in Section 4.4.7.3, this DR has been satisfied.

Table 4.4-2 Safety Significant Evaluations (continued)

Design Criteria Assessment Matrix 4.4.8 Pump Pit Conductivity Probes and High Level Alarms		
Design Requirements	**Requirement Met**	**Basis/References (Ref. 15, 39, 40, 52)**
1. NPH Resistance	N/A	The PP Conductivity Probes and High Level Alarms are not credited for NPH events.
2. Equipment Environment Consideration	Yes	The stainless steel probes and supporting insulated aircraft cable are the only components that are located inside the PP where they could be exposed to a harsh chemical or radiological environment.
3. Functionality	Yes	The PP Conductivity Probes and High Level Alarms were designed to perform their current requirements with a high degree of reliability, however there are vulnerabilities associated with the system. Based on the compensatory actions given in Section 4.4.8.3, this DR has been satisfied.
4. Test Requirements	Yes	The PP Conductivity Probes and High Level Alarms are capable of being tested.
5. Maintenance Requirements	Yes	The PP Conductivity Probes and High Level Alarms are capable of being maintained, however there are vulnerabilities associated with systems utilizing fiber optics. Based on the compensatory actions given in Section 4.4.8.3, this DR has been satisfied.

Design Criteria Assessment Matrix 4.4.9 Pump Pit/Pump Tank Ventilation Systems with Passive Vents		
Design Requirements	**Requirement Met**	**Basis/References (Ref. 19, 33, 45)**
1. NPH Resistance	Yes	The Passive Vents were evaluated to meet current SS seismic and high winds requirement (Ref. 12). The remaining portions of the PP/Pump Tank Ventilation Systems are not credited for NPH events.
2. Equipment Environment Consideration	Yes	The PP/Pump Tank Ventilation Systems located under rain covers or located inside and instrumentation is hermetically sealed.
3. Functionality	Yes	The PP/Pump Tank Ventilation Systems do meet SS QA requirements, however there are vulnerabilities associated with the system. Based on the compensatory actions given in Section 4.4.9.3, this DR has been satisfied.
4. Test Requirements	Yes	The PP/Pump Tank Ventilation Systems are capable of being tested.
5. Maintenance Requirements	Yes	The PP/Pump Tank Ventilation Systems are capable of being maintained.

Table 4.4-2 Safety Significant Evaluations (continued)

Design Criteria Assessment Matrix 4.4.10 HDB-8 Process Vessel Ventilation System		
Design Requirements	**Requirement Met**	**Basis/References (Ref. 19, 33)**
1. NPH Resistance	Yes	The HDB-8 PVV System was evaluated to meet current SS seismic requirements (Ref. 12). It is not credited for other NPH events.
2. Equipment Environment Consideration	Yes	The HDB-8 PVV System is located inside a building enclosure.
3. Functionality	Yes	The HDB-8 PVV System does not meet the reliability and SS QA requirements. Based on the compensatory actions given in Section 4.4.10.3, this DR has been satisfied.
4. Test Requirements	Yes	The HDB-8 PVV System is capable of being tested.
5. Maintenance Requirements	Yes	The HDB-8 PVV System is capable of being maintained.

Design Criteria Assessment Matrix 4.4.11 HDB-8 Diesel Generator		
Design Requirements	**Requirement Met**	**Basis/References (Ref. 21)**
1. NPH Resistance	Yes	The HDB-8 DG and support systems were evaluated to meet current SS seismic requirements (Ref. 12). They are not credited for other NPH events.
2. Equipment Environment Consideration	Yes	The HDB-8 DG and support systems (including instrumentation) are located in an enclosure.
3. Functionality	Yes	The HDB-8 DG and support systems (excluding electrical systems supplied by the DG) were designed, procured, installed, tested, and maintained to SS QA standards and criteria. The electrical systems (supplied by the DG) do not meet the reliability and SS QA requirements. Based on the compensatory actions given in Section 4.4.11.3, this DR has been satisfied.
4. Test Requirements	Yes	The HDB-8 DG and support systems are capable of being tested.
5. Maintenance Requirements	Yes	The HDB-8 DG and support systems are capable of being maintained.

Table 4.4-2 Safety Significant Evaluations (continued)

Design Criteria Assessment Matrix 4.4.12 Leak Detection Boxes/Modified Leak Detection Boxes/ Leak Probe Sleeves		
Design Requirements	**Requirement Met**	**Basis/References (Ref. 15)**
1. NPH Resistance	N/A	The LDBs/MLDBs/LPSs/COPs are not credited for NPH events.
2. Equipment Environment Consideration	Yes	The environmental conditions the LDBs/MLDBs/LPSs/COPs are exposed to during service will not impact the equipment's ability to perform its intended safety function.
3. Functionality	Yes	The LDBs/MLDBs/LPSs/COPs meet QA requirements for SS equipment, however there is a vulnerability associated with the system. Based on the compensatory actions given in Section 4.4.12.3, this DR has been satisfied.
4. Test Requirements	N/A	The LDBs/MLDBs/LPSs/COPs are passive design features and not required to be tested.
5. Maintenance Requirements	Yes	The LDBs/MLDBs/LPSs/COPs are capable of being maintained.

Design Criteria Assessment Matrix 4.4.13 Leak Detection Box/Modified Leak Detection Box/Leak Probe Sleeve Conductivity Probes and High Level Alarms		
Design Requirements	**Requirement Met**	**Basis/References (Ref. 15, 39, 40, 52)**
1. NPH Resistance	N/A	The LDB/MLDB/LPS Conductivity Probes and High Level Alarms are not credited for NPH events.
2. Equipment Environment Consideration	Yes	The stainless steel probes and supporting insulated aircraft cable are the only components that are located inside the LDBs where they could be exposed to a harsh chemical or radiological environment.
3. Functionality	Yes	The LDB/MLDB/LPS Conductivity Probes and High Level Alarms were designed to perform their current requirements with a high degree of reliability, however there are vulnerabilities associated with the system. Based on the compensatory actions given in Section 4.4.13.3, this DR has been satisfied.
4. Test Requirements	Yes	The LDB/MLDB/LPS Conductivity Probes and High Level Alarms are capable of being tested.
5. Maintenance Requirements	Yes	The LDB/MLDB/LPS Conductivity Probes and High Level Alarms are capable of being maintained, however there are vulnerabilities associated with systems utilizing fiber optics. Based on the compensatory actions given in Section 4.4.13.3, this DR has been satisfied.

Table 4.4-2 Safety Significant Evaluations (continued)

Design Criteria Assessment Matrix 4.4.14 FPT-1 Pulse Tube Agitator Liquid Level Interlock		
Design Requirements	**Requirement Met**	**Basis/References (Ref. 16)**
1. NPH Resistance	N/A	The FPT-1 PTA Liquid Level Interlock is not credited for NPH events.
2. Equipment Environment Consideration	Yes	IA to the level detector may have moisture and the tubes and piping are susceptible to freezing. Based on the compensatory actions given in Section 4.4.14.3, this DR has been satisfied.
3. Functionality	Yes	The FPT-1 PTA Liquid Level Interlock was designed to perform its current requirements with a high degree of reliability; however, there are several vulnerabilities that could limit the ability of the system to perform its function. Based on the compensatory actions given in Section 4.4.14.3, this DR has been satisfied.
4. Test Requirements	Yes	The FPT-1 PTA Liquid Level Interlock is capable of being tested.
5. Maintenance Requirements	Yes	The FPT-1 PTA Liquid Level Interlock is capable of being maintained.

Design Criteria Assessment Matrix 4.4.15 FPT-1 Pulse Tube Agitator Air Supply Pressure Relief Valve		
Design Requirements	**Requirement Met**	**Basis/References**
1. NPH Resistance	N/A	The FPT-1 PTA Air Supply PRVs are not credited for NPH events.
2. Equipment Environment Consideration	Yes	The FPT-1 PTA Air Supply PRVs are built to operate in the agitator system and environment around them.
3. Functionality	Yes	The FPT-1 PTA Air Supply PRVs have the reliability to perform their function and QA controls needed for SS equipment.
4. Test Requirements	Yes	The FPT-1 PTA Air Supply PRVs are capable of being tested.
5. Maintenance Requirements	Yes	The FPT-1 PTA Air Supply PRVs are capable of being maintained.

Table 4.4-2 Safety Significant Evaluations (continued)

Design Criteria Assessment Matrix 4.4.16 LDB Drain Cell		
Design Requirements	**Requirement Met**	**Basis/References**
1. NPH Resistance	Yes	The LDB Drain Cell was evaluated to meet current SS seismic requirements (Ref. 12). If the LDB Drain Cell structure survives during a Tornado/High Winds Event, it is credited to provide mitigation for a cell explosion. The LDB Drain Cell structure is not required to withstand high winds (i.e., the structure is not required to be PC-2 high wind qualified) since loss of confinement prior to the event would prevent the event (i.e., the flammable vapors would not accumulate). It is not credited for other NPH events.
2. Equipment Environment Consideration	Yes	The LDB Drain Cell is reinforced concrete, lined with stainless steel, and located below grade.
3. Functionality	Yes	The LDB Drain Cell meets the SS QA requirements with the compensatory actions stated in Section 4.4.16.3.
4. Test Requirements	N/A	The LDB Drain Cell is a passive design feature and not required to be tested.
5. Maintenance Requirements	Yes	The LDB Drain Cell is capable of being maintained.

Design Criteria Assessment Matrix 4.4.17 Area Radiation Monitors with Control Room Notification		
Design Requirements	**Requirement Met**	**Basis/References (Ref. 39, 40, 52)**
1. NPH Resistance	N/A	The ARMs with Control Room Notification are not credited for NPH events.
2. Equipment Environment Consideration	Yes	The environmental conditions ARMs with Control Room Notification are exposed to during service will not impact the equipment's ability to perform its intended safety function.
3. Functionality	Yes	The wiring (hardwired or safety certified PLC) from the ARMs to the Control Room Notification does not meet the reliability and SS QA requirements and is susceptible to damage. There are also vulnerabilities associated with systems utilizing fiber optics. Based on the compensatory actions given in Section 4.4.17.3, this DR has been satisfied.
4. Test Requirements	Yes	The ARMs with Control Room Notification are capable of being tested.
5. Maintenance Requirements	Yes	The ARMs with Control Room Notification are capable of being maintained, however there are vulnerabilities associated with systems utilizing fiber optics. Based on the compensatory actions given in Section 4.4.17.3, this DR has been satisfied.

Table 4.4-2 Safety Significant Evaluations (continued)

Design Criteria Assessment Matrix 4.4.18 Influent Manual Isolation Valves		
Design Requirements	**Requirement Met**	**Basis/References (Ref. 24)**
1. NPH Resistance	N/A	The Influent Manual Isolation Valves are not credited for NPH events.
2. Equipment Environment Consideration	Yes	The environmental conditions the Influent Manual Isolation Valves are exposed to during service will not impact the equipment's ability to perform its intended safety function.
3. Functionality	Yes	The Influent Manual Isolation Valves have the reliability to perform their function and QA controls needed for SS equipment.
4. Test Requirements	Yes	The Influent Manual Isolation Valves Area are capable of being tested.
5. Maintenance Requirements	Yes	The Influent Manual Isolation Valves are capable of being maintained.

Design Criteria Assessment Matrix 4.4.19 Type IIIA Waste Tank CRW Cooling Coils (Excluding Waste Tank 35)		
Design Requirements	**Requirement Met**	**Basis/References**
1. NPH Resistance	Yes	The Type IIIA Waste Tank CRW Cooling Coils were evaluated to meet current SS seismic requirements (Ref. 12). They are not credited for other NPH events.
2. Equipment Environment Consideration	Yes	The Type IIIA Waste Tank CRW Cooling Coils are designed and constructed to operate in the radioactive and caustic environment of the waste tanks.
3. Functionality	Yes	The Type IIIA Waste Tank CRW Cooling Coils were not procured and installed to SS QA requirements but based on compensatory actions given in Section 4.4, meet SS QA requirements.
4. Test Requirements	N/A	The Type IIIA Waste Tank CRW Cooling Coils are passive design features and are not required to be tested.
5. Maintenance Requirements	Yes	The Type IIIA Waste Tank CRW Cooling Coils are capable of being maintained.

Table 4.4-2 Safety Significant Evaluations (continued)

Design Criteria Assessment Matrix 4.4.20 Waste Tank CRW Header Isolation Valves		
Design Requirements	**Requirement Met**	**Basis/References (Ref. 24)**
1. NPH Resistance	Yes	The Waste Tank CRW Header Isolation Valves were evaluated to meet current SS seismic requirements (Ref. 12). They are not credited for other NPH events.
2. Equipment Environment Consideration	Yes	The environmental conditions the Waste Tank CRW Header Isolation Valves are exposed to during service will not impact the equipment's ability to perform its intended safety function.
3. Functionality	Yes	The Waste Tank CRW Header Isolation Valves were not procured and installed to SS QA requirements but based on compensatory actions given in Section 4.4, meet SS QA requirements.
4. Test Requirements	Yes	The Waste Tank CRW Header Isolation Valves are capable of being tested.
5. Maintenance Requirements	Yes	The Waste Tank CRW Header Isolation Valves are capable of being maintained.

Design Criteria Assessment Matrix 4.4.21 Deleted

Design Criteria Assessment Matrix 4.4.22 Waste Tank 30 CRW Coil Isolation Valves		
Design Requirements	**Requirement Met**	**Basis/References (Ref. 24)**
1. NPH Resistance	Yes	Waste Tank 30 CRW Coil Isolation Valves were evaluated to meet current SS seismic requirements (Ref. 12). They are not credited for other NPH events.
2. Equipment Environment Consideration	Yes	The environmental conditions Waste Tank 30 CRW Coil Isolation Valves are exposed to during service will not impact the equipment's ability to perform its intended safety function.
3. Functionality	Yes	Waste Tank 30 CRW Coil Isolation Valves were not procured and installed to SS QA requirements but based on compensatory actions given in Section 4.4, meet SS QA requirements.
4. Test Requirements	Yes	Waste Tank 30 CRW Coil Isolation Valves are capable of being tested.
5. Maintenance Requirements	Yes	Waste Tank 30 CRW Coil Isolation Valves are capable of being maintained.

Table 4.4-2 Safety Significant Evaluations (continued)

Design Criteria Assessment Matrix 4.4.23 Waste Tanks 29, 31, 32, 33, 34, and 35 Type III CRW Cooling Coils		
Design Requirements	**Requirement Met**	**Basis/References**
1. NPH Resistance	N/A	Waste Tanks 29, 31, 32, 33, 34, and 35 Type III CRW Cooling Coils are not credited for NPH events.
2. Equipment Environment Consideration	Yes	The environmental conditions the Waste Tanks 29, 31, 32, 33, 34, and 35 Type III CRW Cooling Coils are exposed to during service will not impact the equipment's ability to perform its intended safety function.
3. Functionality	Yes	Waste Tanks 29, 31, 32, 33, 34, and 35 Type III CRW Cooling Coils were not procured and installed to SS QA requirements but based on compensatory actions given in Section 4.4, meet SS QA requirements.
4. Test Requirements	N/A	Waste Tanks 29, 31, 32, 33, 34, and 35 Type III CRW Cooling Coils are passive design features and not required to be tested.
5. Maintenance Requirements	Yes	Waste Tanks 29, 31, 32, 33, 34, and 35 Type III CRW Cooling Coils are capable of being maintained.

Table 4.4-2 Safety Significant Evaluations (continued)

Design Criteria Assessment Matrix 4.4.24 Type IV Waste Tanks		
Design Requirements	**Requirement Met**	**Basis/References**
1. NPH Resistance	Yes	Type IV Waste Tanks were evaluated and it was determined that they would not catastrophically fail (i.e., no tank top collapse) during and following a Seismic Event (Ref. 12). The Type IV Waste Tank structures are credited to provide mitigation for an explosion during a High Winds Event (i.e., the structures are considered to be PC-2 high wind qualified by virtue of its underground location). If the Type IV Waste Tank structures survive during a Tornado Event, they are credited to provide mitigation for an explosion. The Type IV Waste Tank structures are not required to withstand a tornado (i.e., the structures are not required to be PC-3 tornado qualified) since loss of confinement prior to the event would prevent the event (i.e., the flammable vapors would not accumulate). They are not credited for other NPH events.
2. Equipment Environment Consideration	Yes	The environmental conditions Type IV Waste Tanks are exposed to during service will not impact the equipment's ability to perform its intended safety function.
3. Functionality	Yes	Type IV Waste Tanks were not procured and installed to SS QA requirements but based on compensatory actions given in Section 4.4, meet SS QA requirements.
4. Test Requirements	N/A	Type IV Waste Tanks are passive design features and are not required to be tested.
5. Maintenance Requirements	Yes	Type IV Waste Tanks are capable of being maintained.

Design Criteria Assessment Matrix 4.4.25 Tank 50 and Type IV Waste Tank Purge Ventilation Systems		
Design Requirements	**Requirement Met**	**Basis/References (Ref. 18, 33, 55)**
1. NPH Resistance	N/A	Tank 50 and Type IV Waste Tank Purge Ventilation Systems are not credited for NPH events.
2. Equipment Environment Consideration	Yes	Tank 50 and Type IV Waste Tank Purge Ventilation Systems operate reliably in the environment for which they were designed.
3. Functionality	Yes	Tank 50 and Type IV Waste Tank Purge Ventilation Systems are susceptible to failure because of a loss of power. Based on the compensatory actions given in Section 4.4.25.3, this DR has been satisfied.
4. Test Requirements	Yes	Tank 50 and Type IV Waste Tank Purge Ventilation Systems are capable of being tested.
5. Maintenance Requirements	Yes	Tank 50 and Type IV Waste Tank Purge Ventilation Systems are capable of being maintained.

Table 4.4-2 Safety Significant Evaluations (continued)

Design Criteria Assessment Matrix 4.4.26 Waste Tank Annulus		
Design Requirements	**Requirement Met**	**Basis/References**
1. NPH Resistance	Yes	Waste Tank Annuli were evaluated to meet current SS seismic requirements (Ref. 12). They are not credited for other NPH events.
2. Equipment Environment Consideration	Yes	The environmental conditions Waste Tank Annuli are exposed to during service will not impact the equipment's ability to perform its intended safety function.
3. Functionality	Yes	Waste Tank Annuli were not procured and installed to SS QA requirements but based on compensatory actions given in Section 4.4, meet SS QA requirements.
4. Test Requirements	N/A	Waste Tank Annuli are passive design features and not required to be tested.
5. Maintenance Requirements	Yes	Waste Tank Annuli are capable of being maintained.

Design Criteria Assessment Matrix 4.4.27 Type I, II Annulus Ventilation Systems		
1. NPH Resistance	N/A	Type I, II Annulus Ventilation Systems are not credited for NPH events.
2 Equipment Environment Consideration	Yes	Type I, II Annulus Ventilation Systems operate reliably in the environment for which they were designed.
3 Functionality	Yes	Type I, II Annulus Ventilation Systems are susceptible to failure because of a loss of power. Based on the compensatory actions given in Section 4.4.27.3, this DR has been satisfied.
4 Test Requirements	Yes	Type I, II Annulus Ventilation Systems are capable of being tested.
5 Maintenance Requirements	Yes	Type I, II Annulus Ventilation Systems are capable of being maintained.

Table 4.4-2 Safety Significant Evaluations (continued)

Design Criteria Assessment Matrix 4.4.28 Type I, II, III, IIIA Annulus Conductivity Probes and High Level Alarms		
Design Requirements	**Requirement Met**	**Basis/References (Ref. 22, 39, 40, 52)**
1. NPH Resistance	N/A	Type I, II, III, IIIA Annulus Conductivity Probes and High Level Alarms are not credited for NPH events.
2. Equipment Environment Consideration	Yes	The stainless steel probes and supporting insulated aircraft cable are the only components that are located inside the annulus where they could be exposed to a harsh chemical or radiological environment.
3. Functionality	Yes	Type I, II, III, IIIA Annulus Conductivity Probes and High Level Alarms were designed to perform their current requirements with a high degree of reliability, however there are vulnerabilities associated with the system. Based on the compensatory actions given in Section 4.4.28.3, this DR has been satisfied.
4. Test Requirements	Yes	Type I, II, III, IIIA Annulus Conductivity Probes and High Level Alarms are capable of being tested.
5. Maintenance Requirements	Yes	Type I, II, III, IIIA Annulus Conductivity Probes and High Level Alarms are capable of being maintained, however there are vulnerabilities associated with systems utilizing fiber optics. Based on the compensatory actions given in Section 4.4.28.3, this DR has been satisfied.

Design Criteria Assessment Matrix 4.4.29 Waste Tank Transfer Jet/Pump/SMP Risers		
Design Requirements	**Requirement Met**	**Basis/References**
1. NPH Resistance	Yes	SMP Risers are credited for the Seismic Event and have been shown to be qualified (Ref. 12). Waste Tank Transfer Jet/Pump Risers are not credited for NPH events.
2. Equipment Environment Consideration	Yes	The environmental conditions Waste Tank Transfer Jet/Pump/SMP Risers are exposed to during service will not impact the equipment's ability to perform its intended safety function.
3. Functionality	Yes	Waste Tank Transfer Jet/Pump/SMP Risers were not procured and installed to SS QA requirements but based on compensatory actions given in Section 4.4, meet SS QA requirements.
4. Test Requirements	N/A	Waste Tank Transfer Jet/Pump/SMP Risers are passive design features and not required to be tested.
5. Maintenance Requirements	Yes	Waste Tank Transfer Jet/Pump/SMP Risers are capable of being maintained.

Table 4.4-2 Safety Significant Evaluations (continued)

Design Criteria Assessment Matrix 4.4.30 Waste Tank Transfer Pump/Jet Riser Conductivity Probes and High Level Alarms		
Design Requirements	**Requirement Met**	**Basis/References (Ref. 15, 39, 40, 52)**
1. NPH Resistance	N/A	Waste Tank Transfer Pump/Jet Riser Conductivity Probes and High Level Alarms are not credited for NPH events.
2. Equipment Environment Consideration	Yes	The stainless steel probes and supporting insulated aircraft cable are the only components that are located inside the riser where they could be exposed to a harsh chemical or radiological environment.
3. Functionality	Yes	Waste Tank Transfer Pump/Jet Riser Conductivity Probes and High Level Alarms were designed to perform their current requirements with a high degree of reliability, however there are vulnerabilities associated with the system. Based on the compensatory actions given in Section 4.4.30.3, this DR has been satisfied.
4. Test Requirements	Yes	Waste Tank Transfer Pump/Jet Riser Conductivity Probes and High Level Alarms are capable of being tested.
5. Maintenance Requirements	Yes	Waste Tank Transfer Pump/Jet Riser Conductivity Probes and High Level Alarms are capable of being maintained, however there are vulnerabilities associated with systems utilizing fiber optics. Based on the compensatory actions given in Section 4.4.30.3, this DR has been satisfied.

Table 4.4-2 Safety Significant Evaluations (continued)

Design Criteria Assessment Matrix 4.4.31 Tank 50 and Type IV Waste Tank High Liquid Level Conductivity Probes and Alarms		
Design Requirements	**Requirement Met**	**Basis/References (Ref. 13, 39, 40, 52)**
1. NPH Resistance	N/A	The Tank 50 and Type IV Waste Tank HLLCPs and Alarms are not credited for NPH events.
2. Equipment Environment Consideration	Yes	The stainless steel probes and supporting insulated aircraft cable are the only components that are located inside the riser where they could be exposed to a harsh chemical or radiological environment.
3. Functionality	Yes	The Tank 50 and Type IV Waste Tank HLLCPs and Alarms were designed to perform their current requirements with a high degree of reliability, however there are vulnerabilities associated with the system. Based on the compensatory actions given in Section 4.4.31.3, this DR has been satisfied.
4. Test Requirements	Yes	The Tank 50 and Type IV Waste Tank HLLCPs and Alarms are capable of being tested.
5. Maintenance Requirements	Yes	The Tank 50 and Type IV Waste Tank HLLCPs and Alarms are capable of being maintained, however there are vulnerabilities associated with systems utilizing fiber optics. Based on the compensatory actions given in Section 4.4.31.3, this DR has been satisfied.

Table 4.4-2 Safety Significant Evaluations (continued)

Design Criteria Assessment Matrix 4.4.32 Waste Tank Hydrogen Monitor and High Hydrogen Concentration Interlock		
Design Requirements	**Requirement Met**	**Basis/References (Ref. 26)**
1. NPH Resistance	Yes	Waste Tank Hydrogen Monitor and High Hydrogen Concentration Interlock meets current SS seismic requirements. They are not credited for other NPH events.
2. Equipment Environment Consideration	Yes	Components/subassemblies of this instrument may be susceptible to degradation or failure as a result of the harsh chemical and/or radiological environment. Based on the compensatory actions given in Section 4.4.32.3, this DR has been satisfied. The environmental conditions the Interlock is exposed to during service will not impact the equipment's ability to perform its intended safety function.
3. Functionality	Yes	Waste Tank Hydrogen Monitor was designed, procured, installed, tested, and maintained to SS QA standards and criteria. The Interlock was designed, constructed, and tested to SS criteria.
4. Test Requirements	Yes	Although every effort is made to functionally test the entire loop, there is currently no method to test the tubing between the waste tank vapor space and the instrument isolation valve. Based on the compensatory actions given in Section 4.4.32.3, this DR has been satisfied. Waste Tank Hydrogen Monitor and High Hydrogen Concentration Interlock are capable of being tested.
5. Maintenance Requirements	Yes	Waste Tank Hydrogen Monitor and High Hydrogen Concentration Interlock are capable of being maintained.

Table 4.4-2 Safety Significant Evaluations (continued)

Design Criteria Assessment Matrix 4.4.33 H-Area Catch Tank and Catch Tank Encasement		
Design Requirements	**Requirement Met**	**Basis/References**
1. NPH Resistance	N/A	The H-Area Catch Tank and Catch Tank Encasement were evaluated to meet current SS seismic requirements (Ref. 12). If the H-Area Catch Tank Encasement structure survives during a Tornado/High Winds Event, it is credited to provide mitigation for an explosion. The H-Area Catch Tank Encasement structure is not required to withstand high winds (i.e., the structure is not required to be PC-2 high wind qualified) since loss of confinement prior to the event would prevent the event (i.e., the flammable vapors would not accumulate). They are not credited for other NPH events.
2. Equipment Environment Consideration	Yes	The environmental conditions the H-Area Catch Tank and Catch Tank Encasement are exposed to during service will not impact the equipment's ability to perform its intended safety function.
3. Functionality	Yes	The H-Area Catch Tank and Catch Tank Encasement were not procured and installed to SS QA requirements but based on compensatory actions given in Section 4.4, meet SS QA requirements.
4. Test Requirements	N/A	The H-Area Catch Tank and Catch Tank Encasement are passive design features and not required to be tested.
5. Maintenance Requirements	Yes	The H-Area Catch Tank and Catch Tank Encasement are capable of being maintained.

Design Criteria Assessment Matrix 4.4.34 Deleted

Table 4.4-2 Safety Significant Evaluations (continued)

Design Criteria Assessment Matrix 4.4.35 242-16H and 242-25H Evaporator Tube Bundles		
Design Requirements	**Requirement Met**	**Basis/References**
1. NPH Resistance	Yes	The 242-25H Evaporator Tube Bundle was designed and installed to meet seismic requirements. Evaluation has shown that the 242-16H Evaporator Steam Tube Bundle is not significantly affected (no loss of safety function) by a Seismic Event.
2. Equipment Environment Consideration	Yes	The environmental conditions the 242-16H and 242-25H Evaporator Tube Bundles are exposed to during service will not impact the equipment's ability to perform its intended safety function.
3. Functionality	Yes	The 242-25H Evaporator Tube Bundle was designed, constructed, and tested to Level 1 QA requirements. The 242-16H Evaporator Tube Bundle was not procured and installed to SS QA requirements but based on compensatory actions given in Section 4.4, meet SS QA requirements.
4. Test Requirements	N/A	The 242-16H and 242-25H Evaporator Tube Bundles are passive design features. Implementation of the Structural Integrity Program and associated testing/inspection assure functionality to meet SS DRs.
5. Maintenance Requirements	Yes	The 242-16H and 242-25H Evaporator Tube Bundles are capable of being maintained.

Table 4.4-2 Safety Significant Evaluations (continued)

Design Criteria Assessment Matrix 4.4.36 242-16H and 242-25H Evaporator Lance Air Supply Line Orifices		
Design Requirements	**Requirement Met**	**Basis/References**
1. NPH Resistance	N/A	The 242-16H and 242-25H Lance Air Supply Line Orifices are credited with protecting the initial conditions (restricted flow and pressure to the lance) assumed for a Seismic Event.
2. Equipment Environment Consideration	Yes	The environmental conditions the 242-16H and 242-25H Evaporator Lance Air Supply Line Orifices are exposed to during service will not impact the equipment's ability to perform its intended safety function.
3. Functionality	Yes	The 242-16H and 242-25H Evaporator Lance Air Supply Line Orifices were designed, constructed, and tested to SS criteria.
4. Test Requirements	N/A	The 242-16H and 242-25H Evaporator Lance Air Supply Line Orifices are passive design features and not required to be tested.
5. Maintenance Requirements	Yes	The 242-16H and 242-25H Evaporator Lance Air Supply Line Orifices are capable of being maintained.

Table 4.4-2 Safety Significant Evaluations (continued)

Design Criteria Assessment Matrix 4.4.37 242-16H and 242-25H Evaporator Lance Steam Supply Line Orifices		
Design Requirements	**Requirement Met**	**Basis/References**
1. NPH Resistance	N/A	The 242-16H and 242-25H Evaporator Lance Steam Supply Line Orifices are credited with protecting the initial conditions (restricted flow and pressure to the lance) assumed for a Seismic Event.
2. Equipment Environment Consideration	Yes	The environmental conditions the 242-16H and 242-25H Evaporator Lance Steam Supply Line Orifices are exposed to during service will not impact the equipment's ability to perform its intended safety function.
3. Functionality	Yes	The 242-16H and 242-25H Evaporator Lance Steam Supply Line Orifices were not procured and installed to SS QA requirements but based on compensatory actions given in Section 4.4, meet SS QA requirements.
4. Test Requirements	N/A	The 242-16H and 242-25H Evaporator Lance Steam Supply Line Orifices are passive design features and not required to be tested.
5. Maintenance Requirements	Yes	The 242-16H and 242-25H Evaporator Lance Steam Supply Line Orifices are capable of being maintained.

Table 4.4-2 Safety Significant Evaluations (continued)

Design Criteria Assessment Matrix 4.4.38 242-16H Evaporator Tube Bundle Steam Pressure Control Valve and Tube Bundle Steam Pressure Relief Valve		
Design Requirements	**Requirement Met**	**Basis/References**
1. NPH Resistance	Yes	The 242-16H Evaporator Tube Bundle Steam PCV and Tube Bundle Steam PRV were evaluated to meet current SS seismic requirements (Ref. 12).
2. Equipment Environment Consideration	Yes	The environmental conditions the 242-16H Evaporator Tube Bundle Steam PCV and Tube Bundle Steam PRV are exposed to during service will not impact the equipment's ability to perform its intended safety function.
3. Functionality	Yes	The 242-16H Evaporator Tube Bundle Steam PCV and Tube Bundle Steam PRV were not procured and installed to SS QA requirements but based on compensatory actions given in Section 4.4, meet SS QA requirements.
4. Test Requirements	Yes	The 242-16H Evaporator Tube Bundle Steam PCV and Tube Bundle Steam PRV are capable of being tested.
5. Maintenance Requirements	Yes	The 242-16H Evaporator Tube Bundle Steam PCV and Tube Bundle Steam PRV are capable of being maintained.

Design Criteria Assessment Matrix 4.4.39 242-25H Evaporator Lance Steam Pressure Control Valve and Lance Steam Pressure Relief Valve		
Design Requirements	**Requirement Met**	**Basis/References**
1. NPH Resistance	Yes	The 242-25H Evaporator Lance Steam PCV and Lance Steam PRV were evaluated to meet current SS seismic requirements (Ref. 12).
2. Equipment Environment Consideration	Yes	The environmental conditions the 242-25H Evaporator Lance Steam PCV and Lance Steam PRV are exposed to during service will not impact the equipment's ability to perform its intended safety function.
3. Functionality	Yes	The 242-25H Evaporator Lance Steam PCV and Lance Steam PRV were not procured and installed to SS QA requirements but based on compensatory actions given in Section 4.4, meet SS QA requirements.
4. Test Requirements	Yes	The 242-25H Evaporator Lance Steam PCV and Lance Steam PRV are capable of being tested.
5. Maintenance Requirements	Yes	The 242-25H Evaporator Lance Steam PCV and Lance Steam PRV are capable of being maintained.

Table 4.4-2 Safety Significant Evaluations (continued)

Design Criteria Assessment Matrix 4.4.40 Submersible Mixer Pump Column Pressure Boundary		
Design Requirements	**Requirement Met**	**Basis/References**
1. NPH Resistance	Yes	The SMP Column Pressure Boundary was evaluated to meet current SS seismic requirements (Ref. 12).
2. Equipment Environment Consideration	Yes	The environmental conditions the SMP Column Pressure Boundary are exposed to during service will not impact the equipment's ability to perform its intended safety function.
3. Functionality	Yes	The SMP was procured and built as a PS SSC, but the SMP Column Pressure Boundary is considered capable of performing its SS function based on the procurement and testing compensatory measures stated in Section 4.4.40.3.
4. Test Requirements	N/A	The SMP Column Pressure Boundary is a passive design feature and is not required to be tested.
5. Maintenance Requirements	Yes	The SMP Column Pressure Boundary is capable of being maintained.

Design Criteria Assessment Matrix 4.4.41 Submersible Mixer Pump Flush/Motor Pressure Boundary		
Design Requirements	**Requirement Met**	**Basis/References**
1. NPH Resistance	Yes	The SMP Flush/Motor Pressure Boundary was evaluated to meet current SS seismic requirements (Ref. 12).
2. Equipment Environment Consideration	Yes	The environmental conditions the SMP Flush/Motor Pressure Boundary are exposed to during service will not impact the equipment's ability to perform its intended safety function.
3. Functionality	Yes	The SMP was procured and built as a PS SSC, but the SMP Flush/Motor Pressure Boundary is considered capable of performing its SS function based on the procurement and testing compensatory measures stated in Section 4.4.41.3.
4. Test Requirements	N/A	The SMP Flush/Motor Pressure Boundary is a passive design feature and is not required to be tested.
5. Maintenance Requirements	Yes	The SMP Flush/Motor Pressure Boundary is capable of being maintained.

Table 4.4-2 Safety Significant Evaluations (continued)

Design Criteria Assessment Matrix 4.4.42 Submersible Mixer Pump Riser Conductivity Probe Interlocks		
Design Requirements	**Requirement Met**	**Basis/References**
1. NPH Resistance	Yes	The SMP Riser Conductivity Probe Interlocks were evaluated to meet current SS seismic requirements (Ref. 12). It is not credited for other NPH events.
2. Equipment Environment Consideration	Yes	The environmental conditions the SMP Riser Conductivity Probe Interlocks are exposed to during service will not impact the equipment's ability to perform its intended safety function.
3. Functionality	Yes	The SMP Riser Conductivity Probe Interlocks were procured and installed to SS QA requirements.
4. Test Requirements	Yes	The SMP Riser Conductivity Probe Interlocks are capable of being tested.
5. Maintenance Requirements	Yes	The SMP Riser Conductivity Probe Interlocks are capable of being maintained.

Design Criteria Assessment Matrix 4.4.43 Submersible Mixer Pump Electrical Breakers/Disconnects		
Design Requirements	**Requirement Met**	**Basis/References**
1. NPH Resistance	Yes	The SMP Electrical Breakers/Disconnects were evaluated to meet current SS seismic requirements (Ref. 12). They are not credited for other NPH events.
2. Equipment Environment Consideration	Yes	The environmental conditions the SMP Electrical Breakers/Disconnects are exposed to during service will not impact the equipment's ability to perform its intended safety function.
3. Functionality	Yes	The SMP Electrical Breakers/Disconnects meet the current QA requirements.
4. Test Requirements	Yes	The SMP Electrical Breakers/Disconnects are capable of being tested.
5. Maintenance Requirements	Yes	The SMP Electrical Breakers/Disconnects are capable of being maintained.

Table 4.4-2 Safety Significant Evaluations (continued)

Design Criteria Assessment Matrix 4.4.44 Tank 50 Waste Temperature Monitoring		
Design Requirements	**Requirement Met**	**Basis/References (Ref. 12)**
1. NPH Resistance	N/A	The Tank 50 Waste Temperature Monitoring is not credited for NPH events.
2. Equipment Environment Consideration	Yes	The environmental conditions the Tank 50 Waste Temperature Monitoring is exposed to during service will not impact the equipment's ability to perform its intended safety function.
3. Functionality	Yes	The Tank 50 Waste Temperature Monitoring was designed, procured, installed, tested, and maintained to SS QA standards and criteria.
4. Test Requirements	Yes	The Tank 50 Waste Temperature Monitoring is capable of being tested.
5. Maintenance Requirements	Yes	The Tank 50 Waste Temperature Monitoring is capable of being maintained.

Design Criteria Assessment Matrix 4.4.45 Deleted

Design Criteria Assessment Matrix 4.4.46 Deleted

Design Criteria Assessment Matrix 4.4.47 242-16H and 242-25H Evaporator Mercury Monitoring		
Design Requirements	**Requirement Met**	**Basis/References**
1. NPH Resistance	N/A	The 242-16H and 242-25H Evaporator Mercury Monitoring is not credited for NPH events.
2. Equipment Environment Consideration	Yes	The environmental conditions the 242-16H and 242-25H Evaporator Mercury Monitoring is exposed to during service will not impact the equipment's ability to perform its intended safety function.
3. Functionality	Yes	The 242-16H and 242-25H Evaporator Mercury Monitoring was designed, procured, installed, tested, and maintained to SS QA standards and criteria.
4. Test Requirements	Yes	The 242-16H and 242-25H Evaporator Mercury Monitoring is capable of being tested.
5. Maintenance Requirements	Yes	The 242-16H and 242-25H Evaporator Mercury Monitoring is capable of being maintained.

4.7 FIGURES

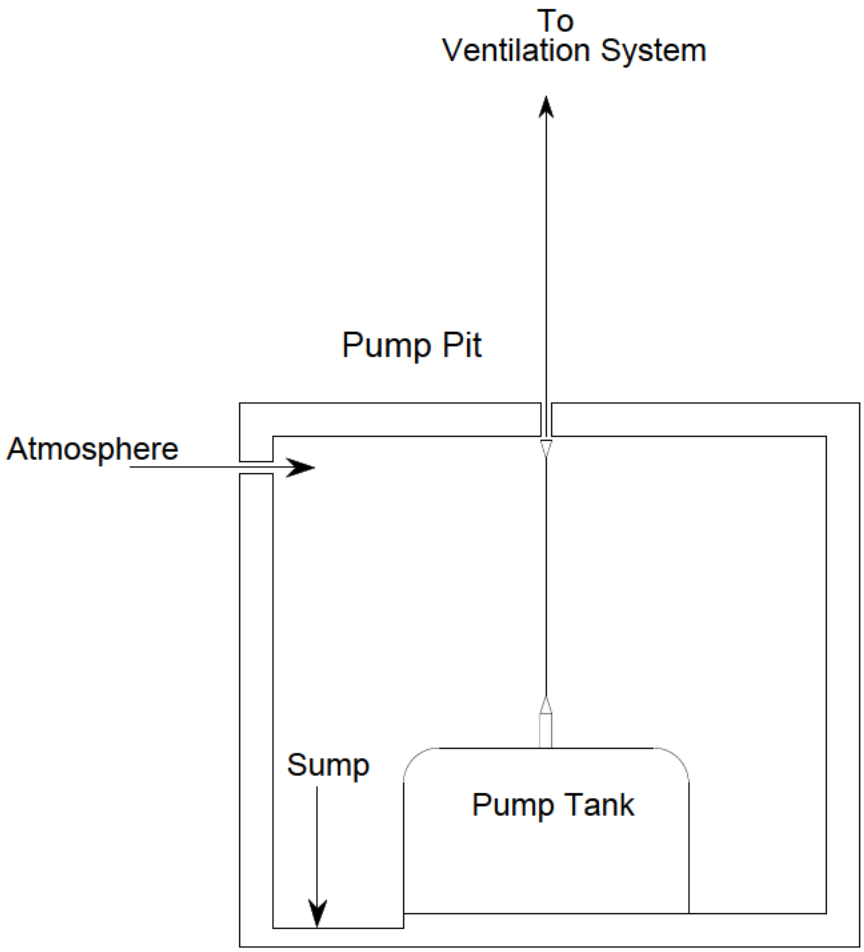

Note: The pump tank and pump pit cell structure are in the SC boundary. Other components shown in this figure (e.g., atmospheric inlet, ventilation system outlet) are not SC.

Figure 4.3-1 Pump Pit (Typical)

Note: Junction box enclosure is not SC.

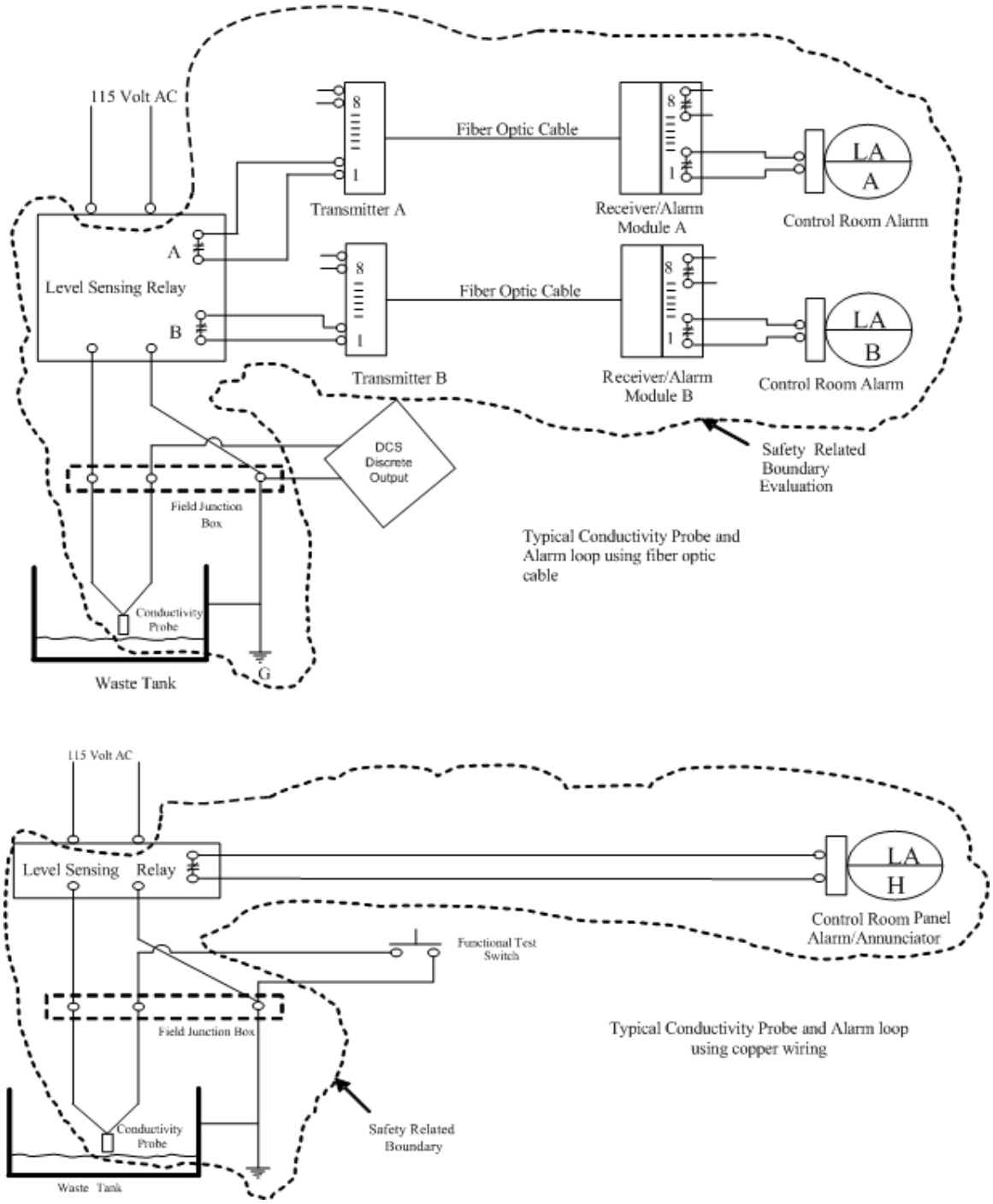

Figure 4.3-2 Conductivity Probe and Alarm Configuration (Typical)

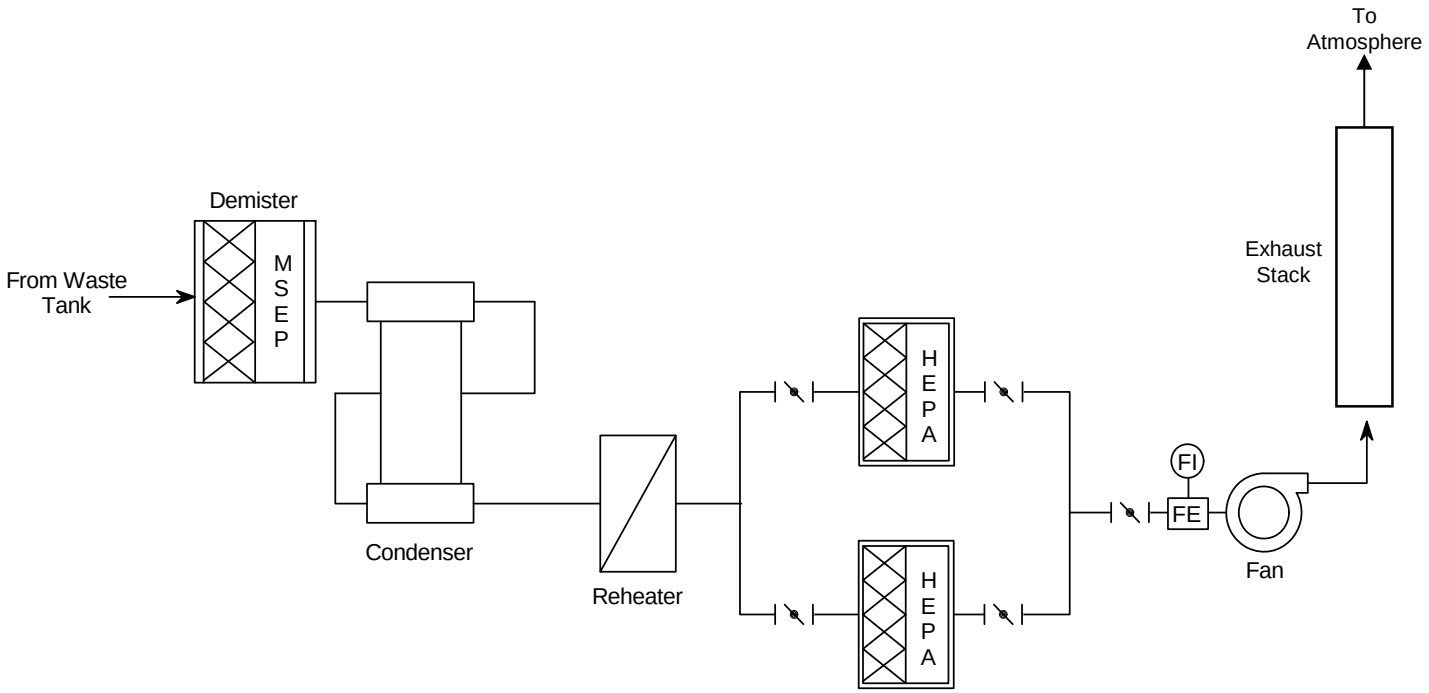

Figure 4.3-3 Waste Tank Purge Ventilation System (Typical)

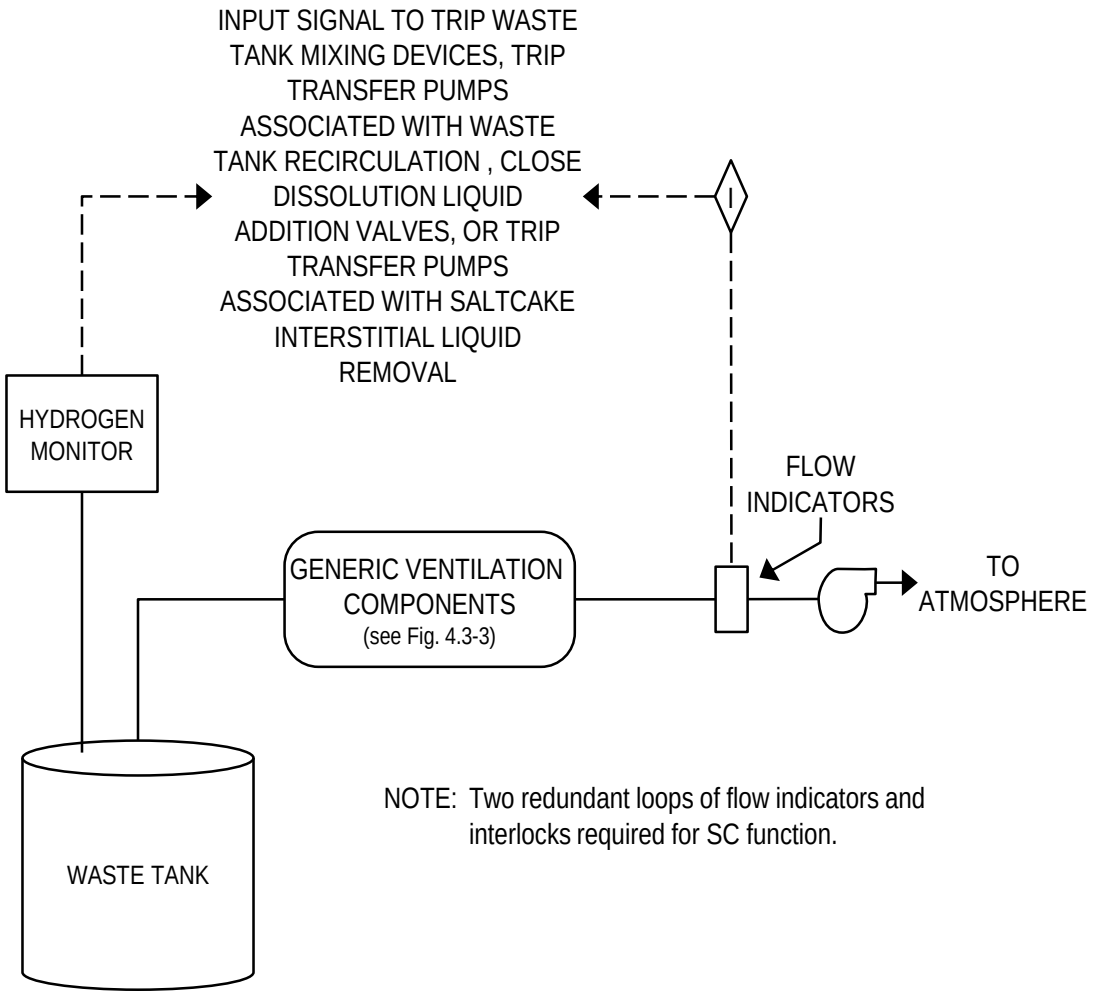

Figure 4.3-4 Waste Tank Ventilation Low Flow and High Hydrogen Concentration Interlocks

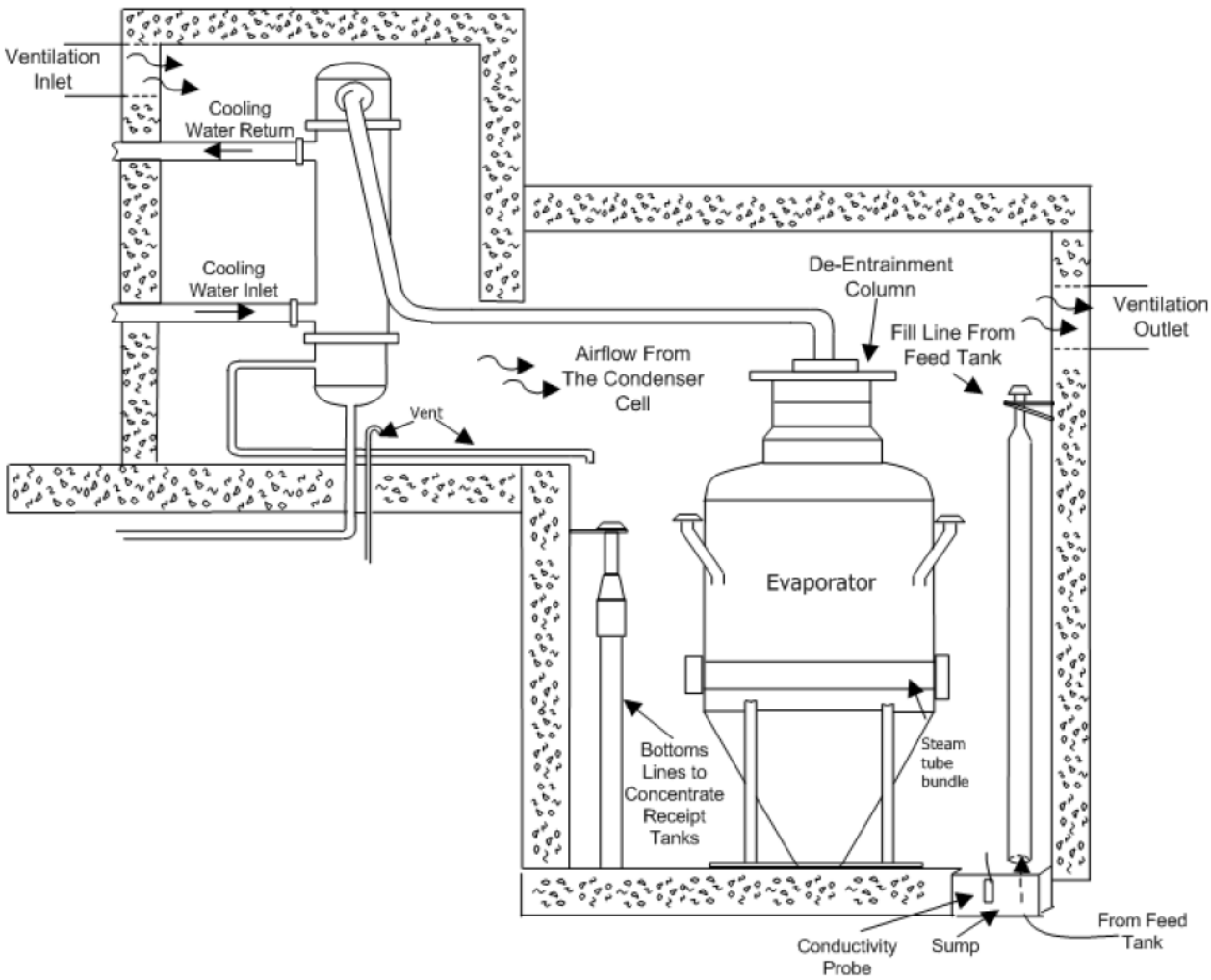

Note: The evaporator cell structure is the SC boundary. Other components shown in this figure located within the cell (e.g., evaporator) are not SC.

Figure 4.3-5 Evaporator Cell (Typical)

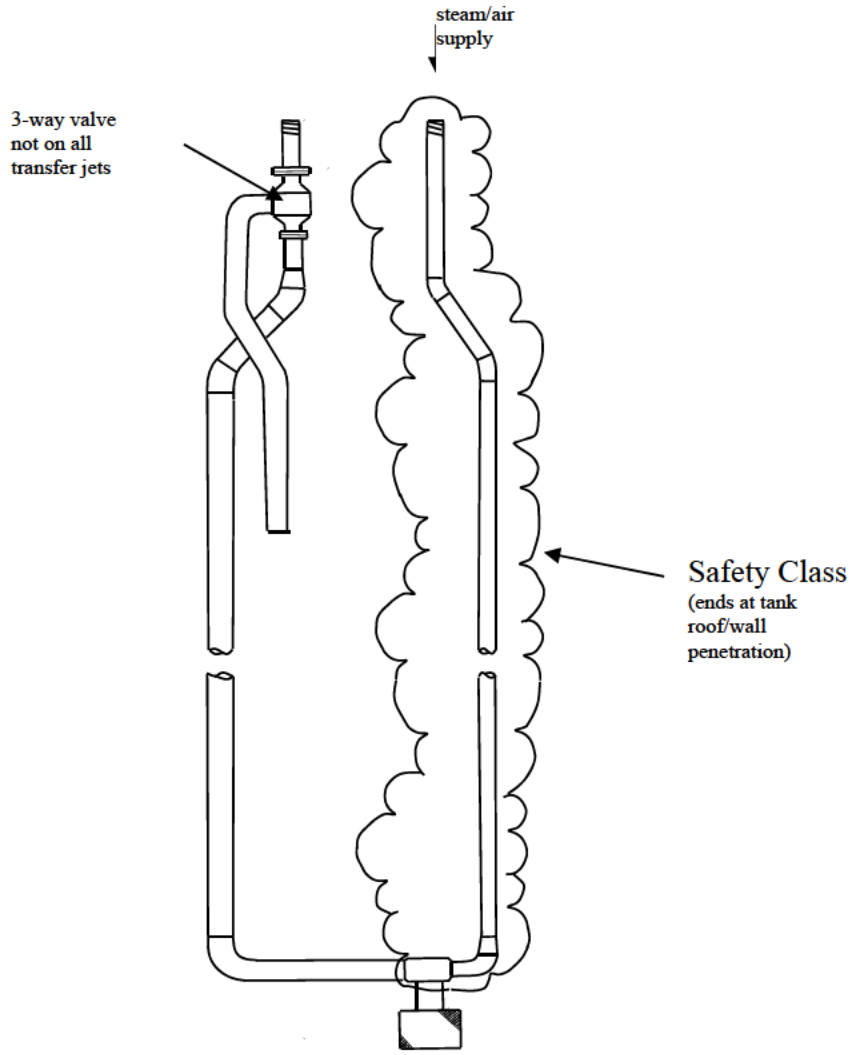

Figure 4.3-6 Waste Tank Transfer Jet

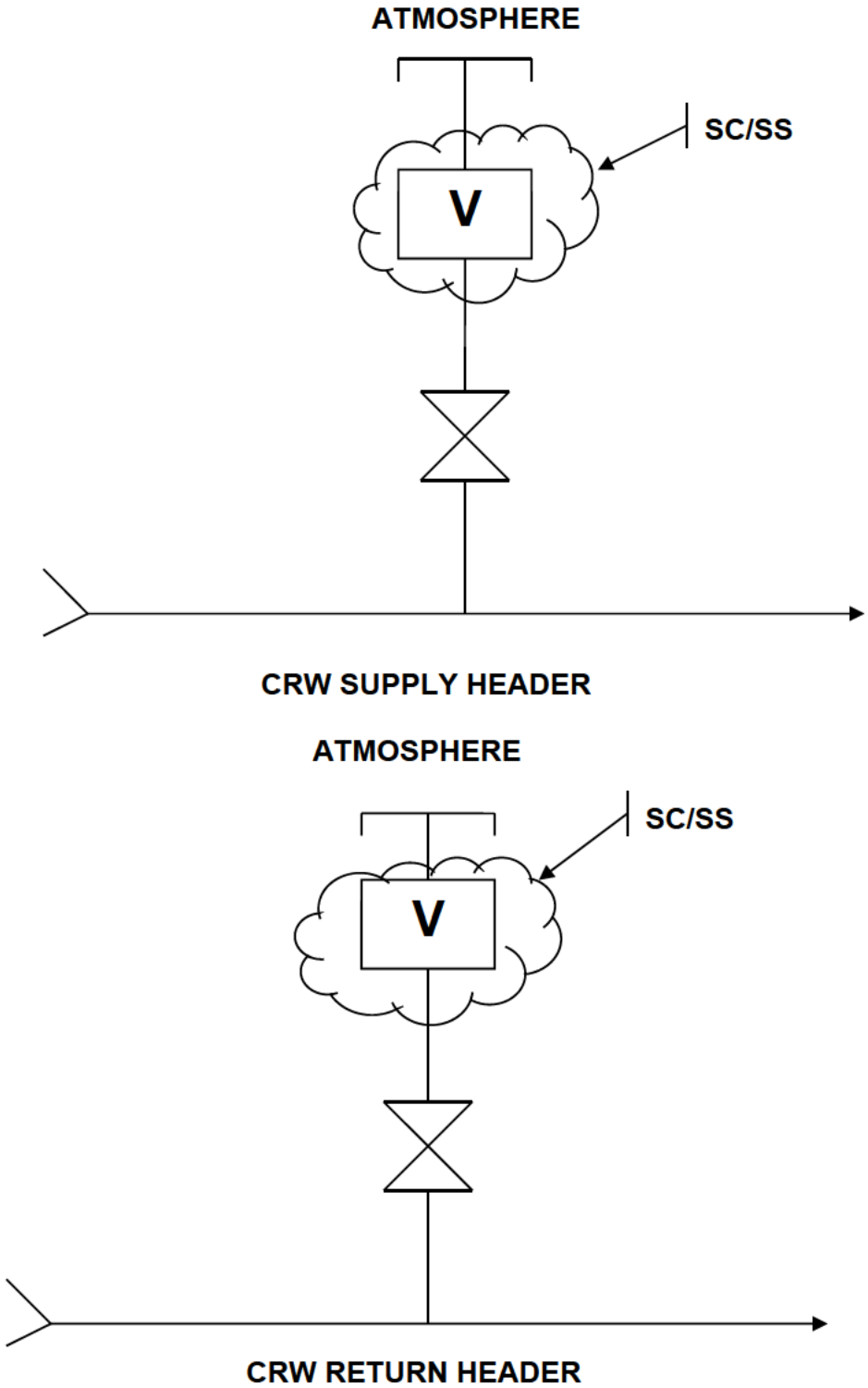

Figure 4.3-7 Chromate Water Siphon Breakers (Typical)

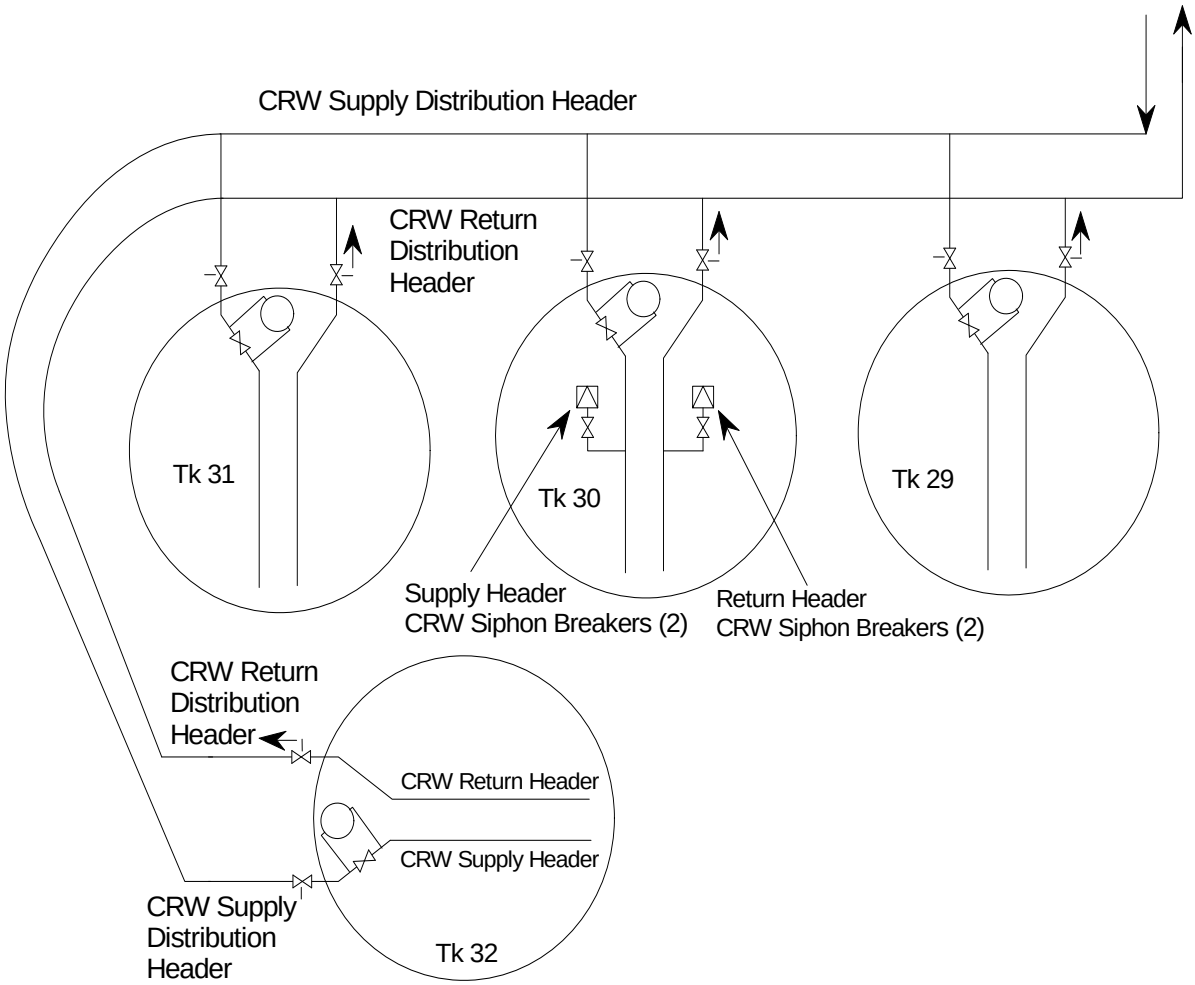

Figure 4.3-8 Chromate Water Supply/Return Distribution Headers for Waste Tanks 29, 30, 31, and 32

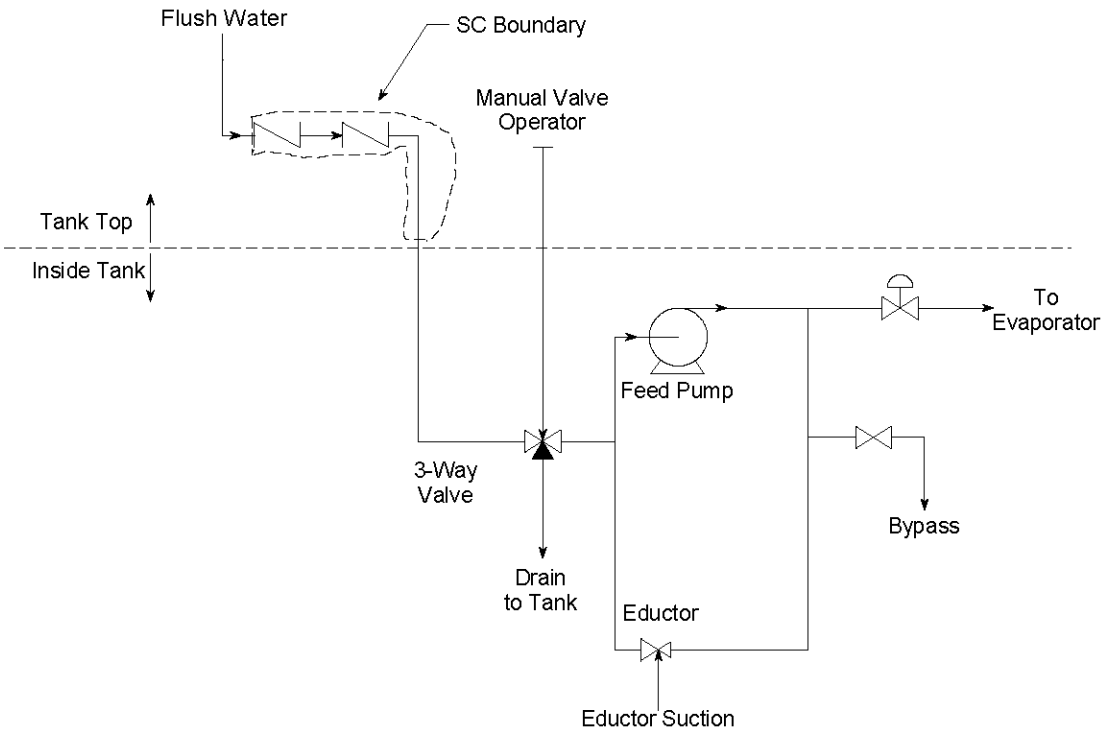

Figure 4.3-9 242-16H Evaporator Feed Pump Backflow Prevention Devices

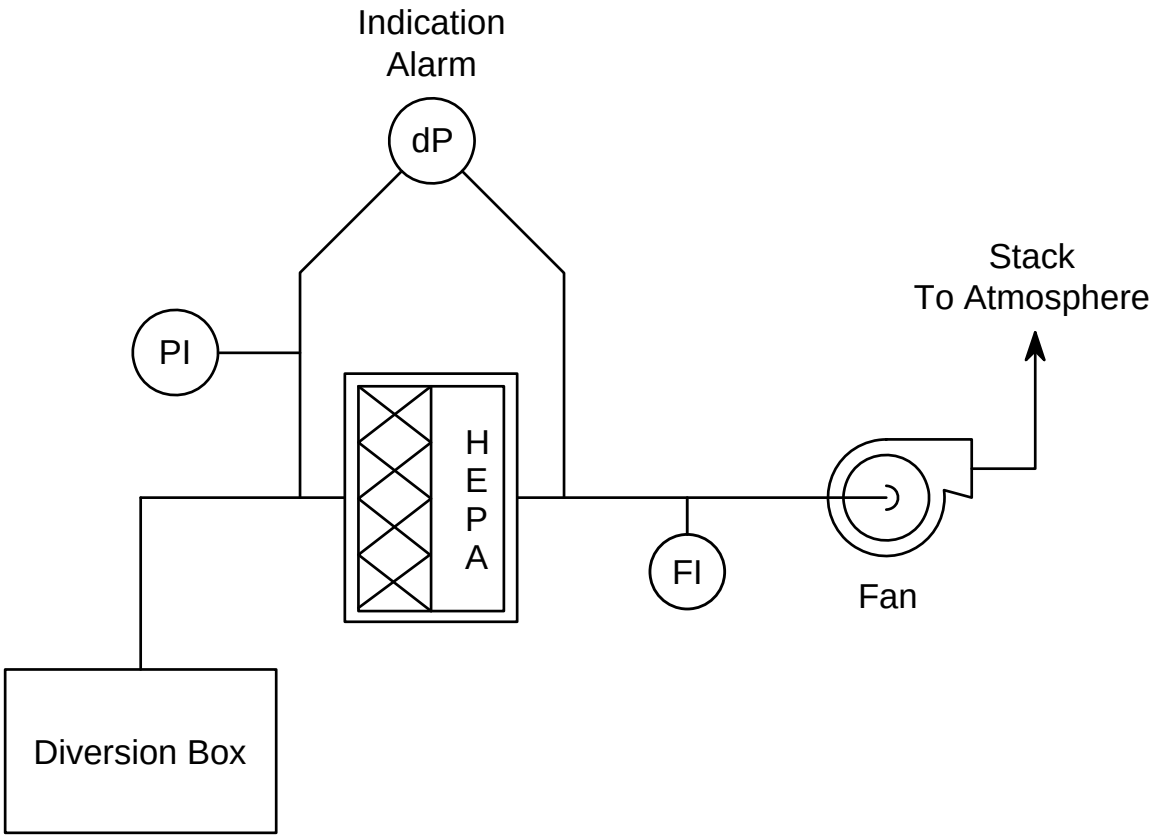

Figure 4.4-1 Diversion Box Ventilation System (H-Area Diversion Boxes 6 and 7)

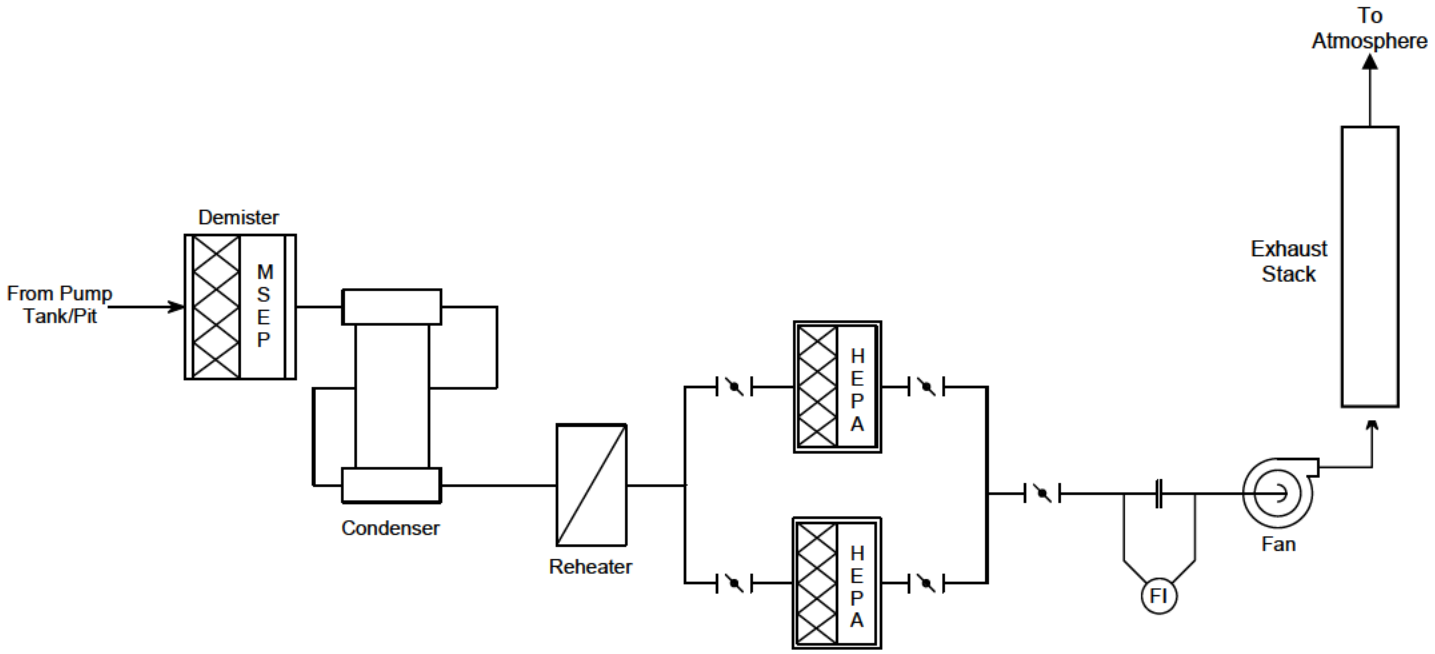

Figure 4.4-2 Pump Tank/Pit and Diversion Box Exhaust Ventilation System (Typical)

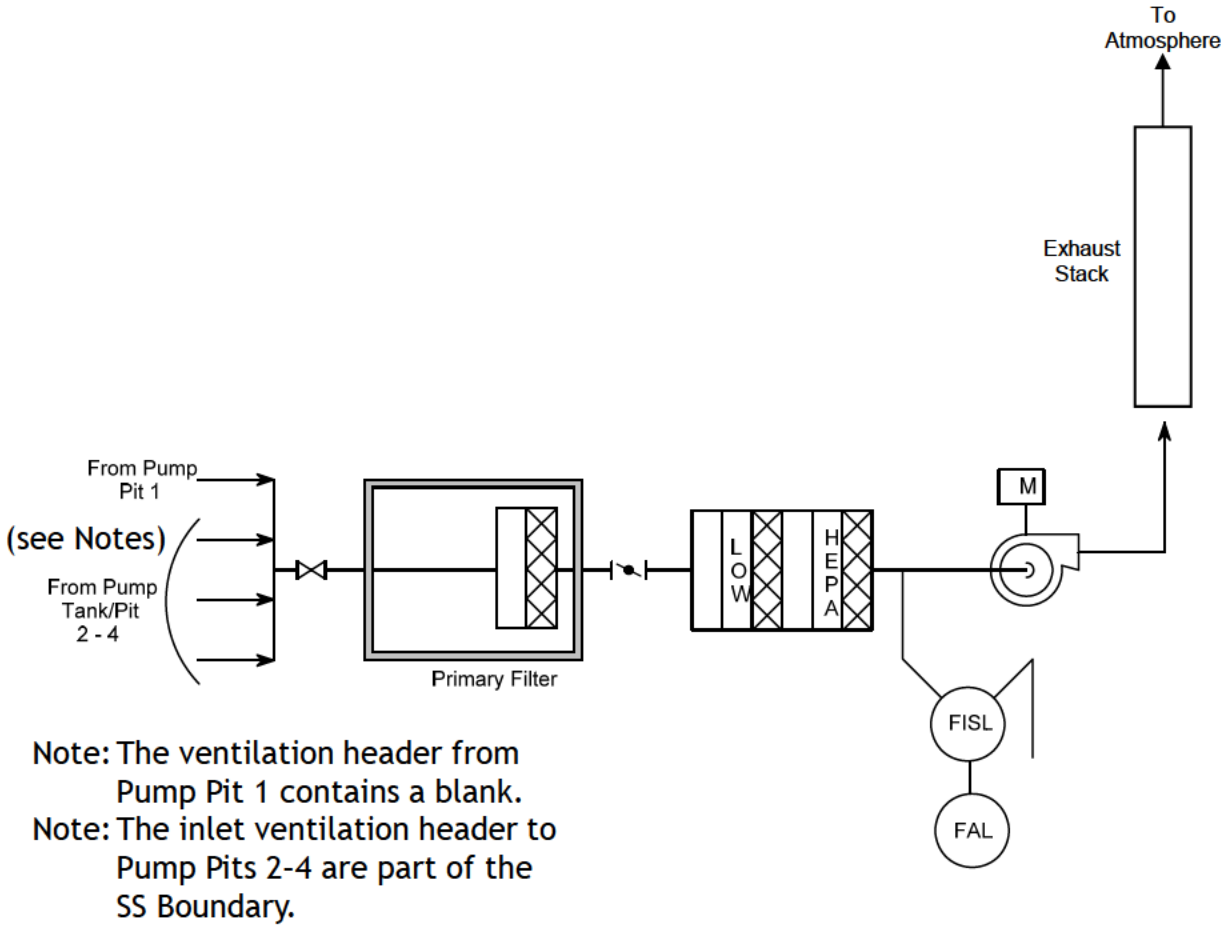

Figure 4.4-3 H Tank Farm Pump Tanks 2-4 and Diversion Box 2 Exhaust Ventilation System

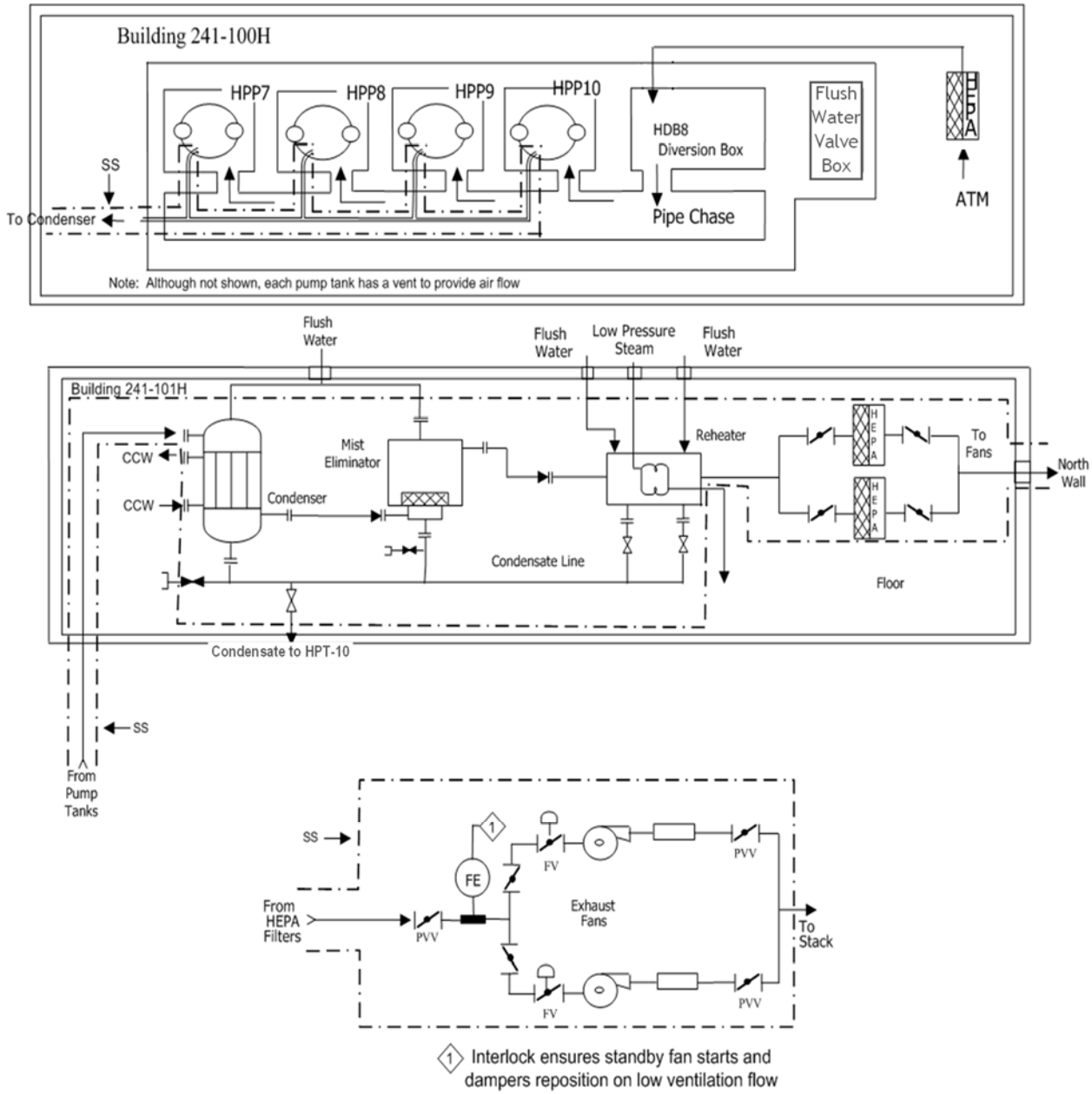

Figure 4.4-4 H-Area Diversion Box 8 Process Vessel Ventilation System

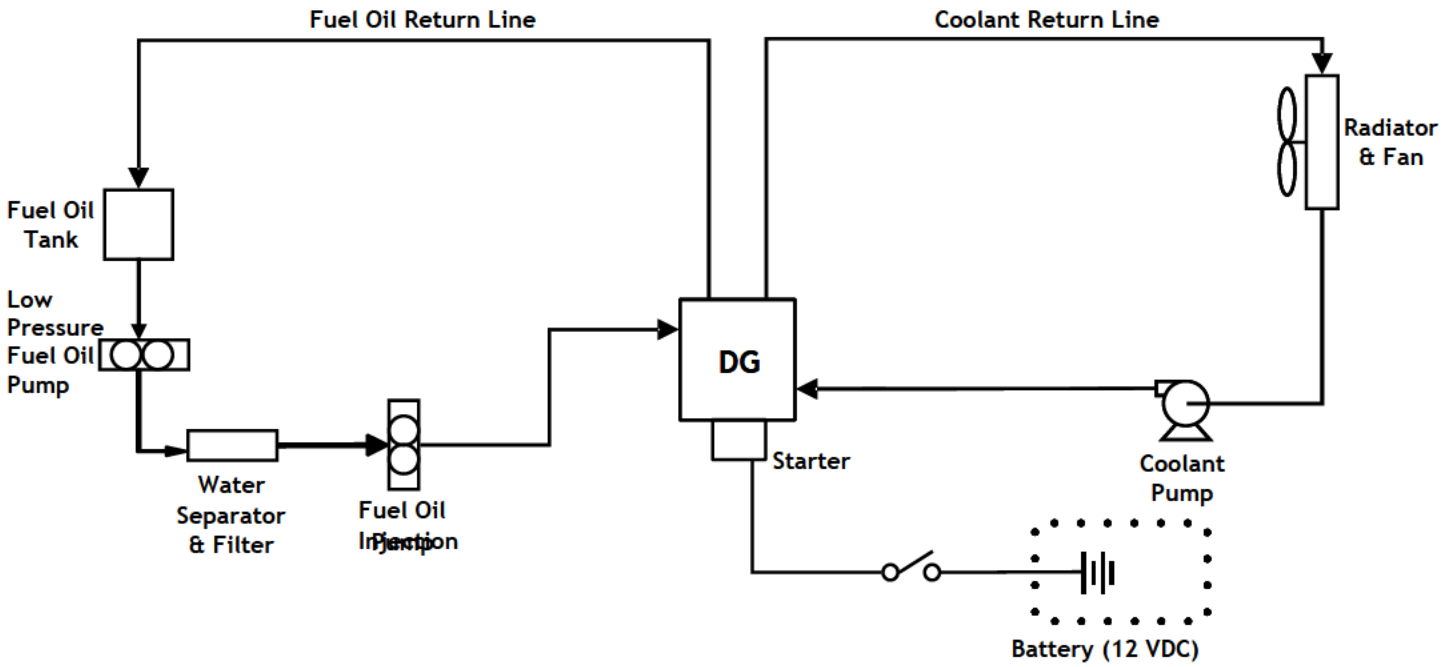

Instrumentation and controls are not shown in the drawing. The instrumentation and controls are included in the Chapter 4 text. The Lube Oil System is not shown because it is an integral part of the DG versus an external piping system.

Figure 4.4-5 H-Area Diversion Box 8 Diesel Generator System

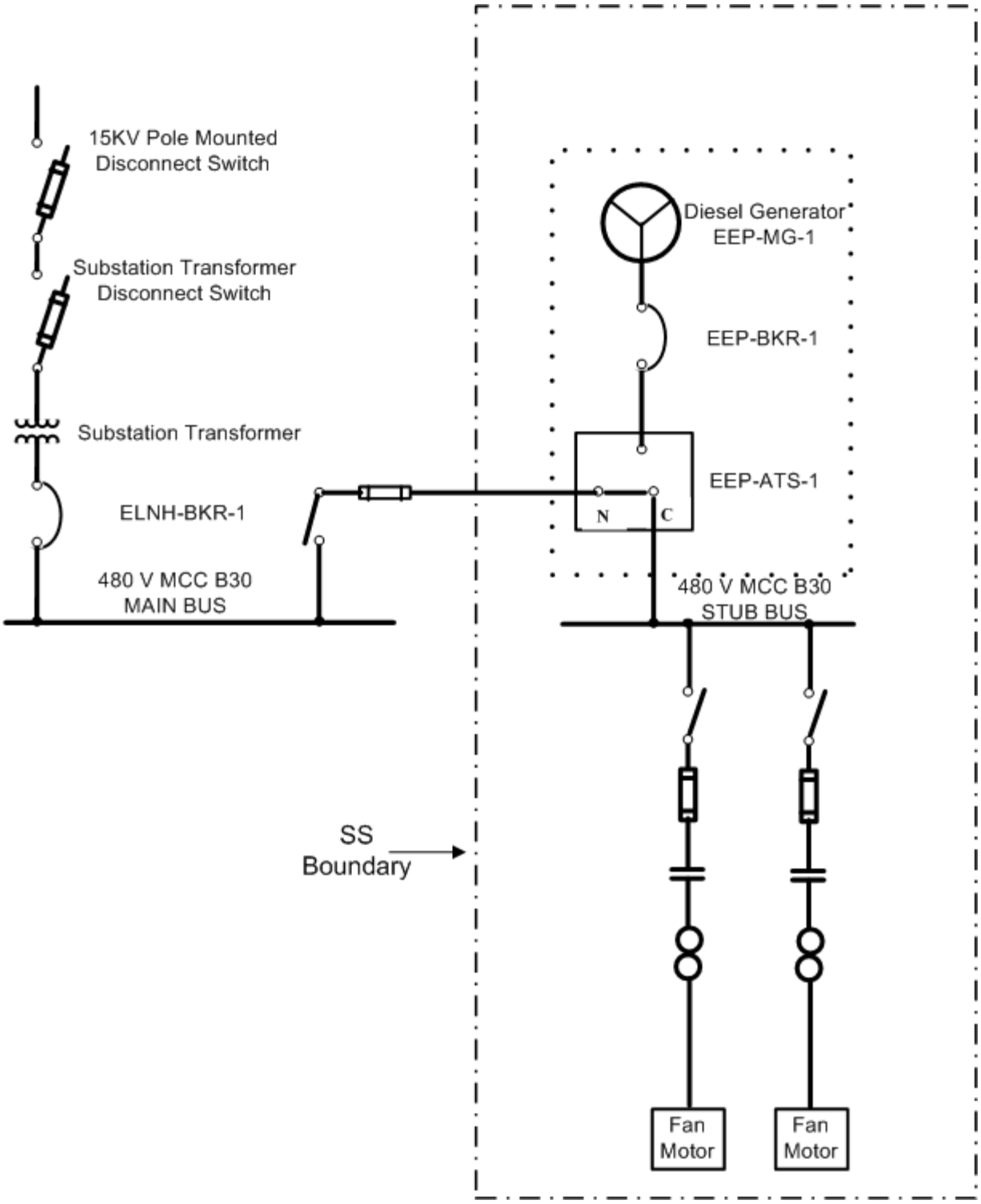

Figure 4.4-6 H-Area Diversion Box 8 Standby Electrical Power System

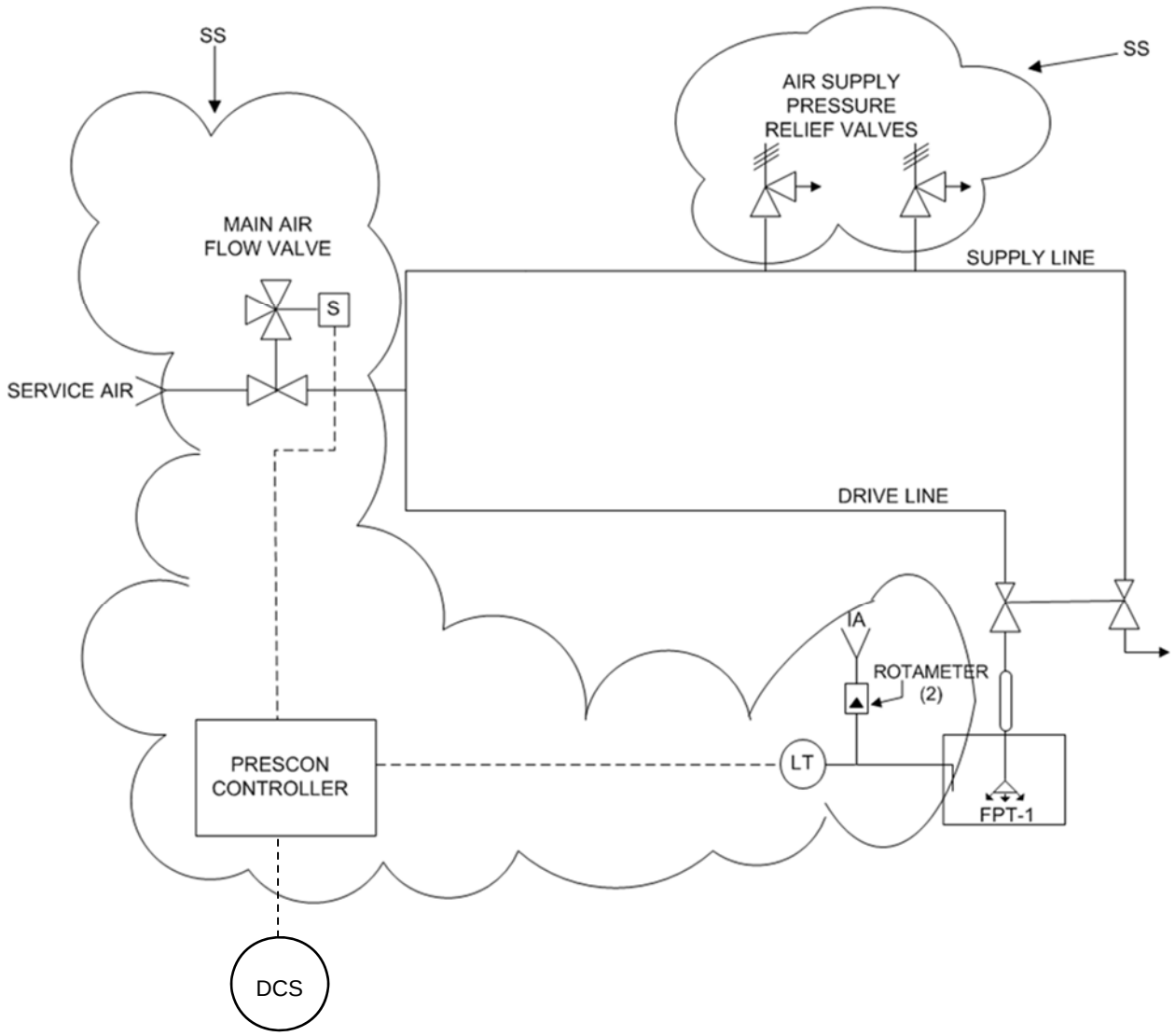

Figure 4.4-7 F-Area Pump Tank-1 Pulse Tube Agitator Interlocks

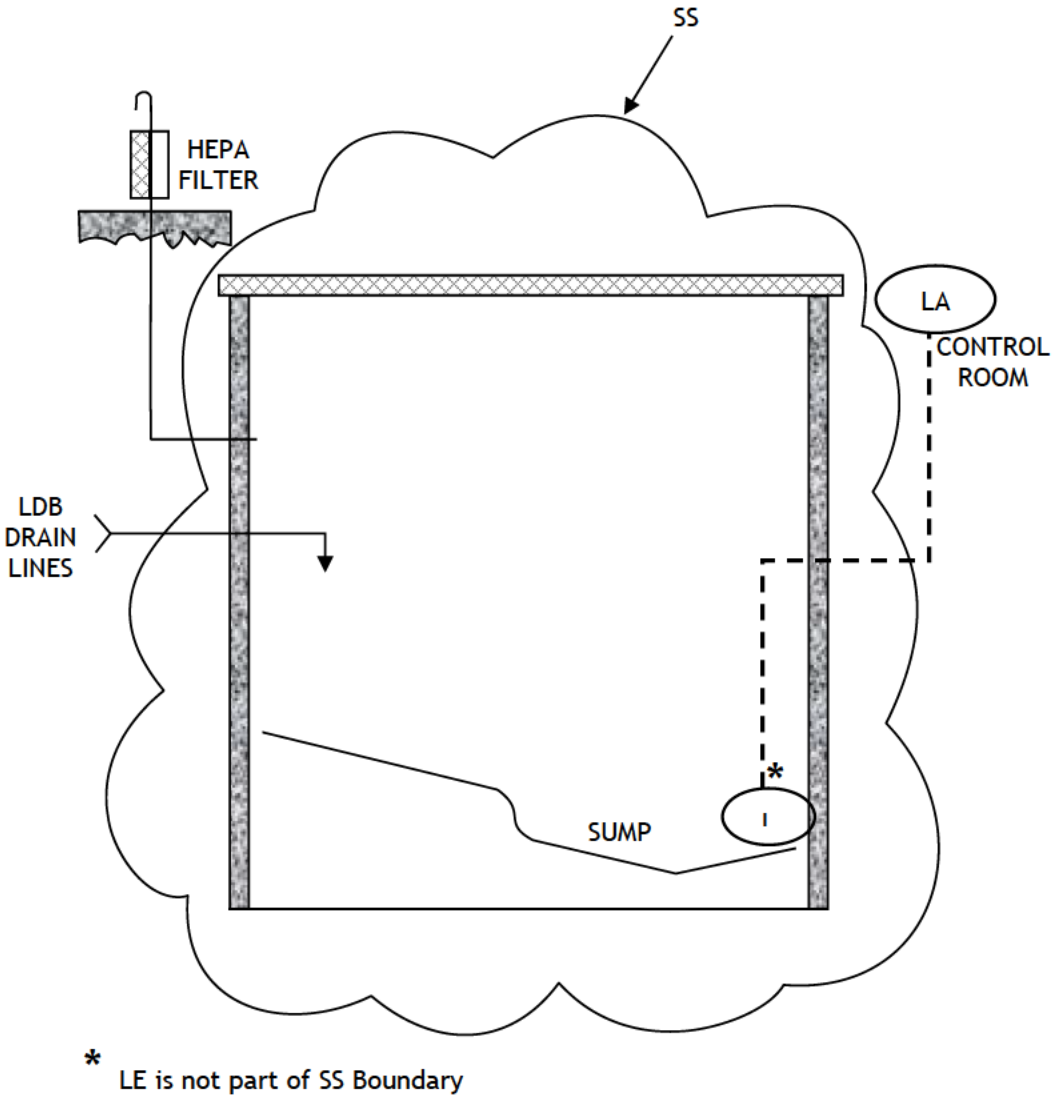

Figure 4.4-8 Leak Detection Box Drain Cell

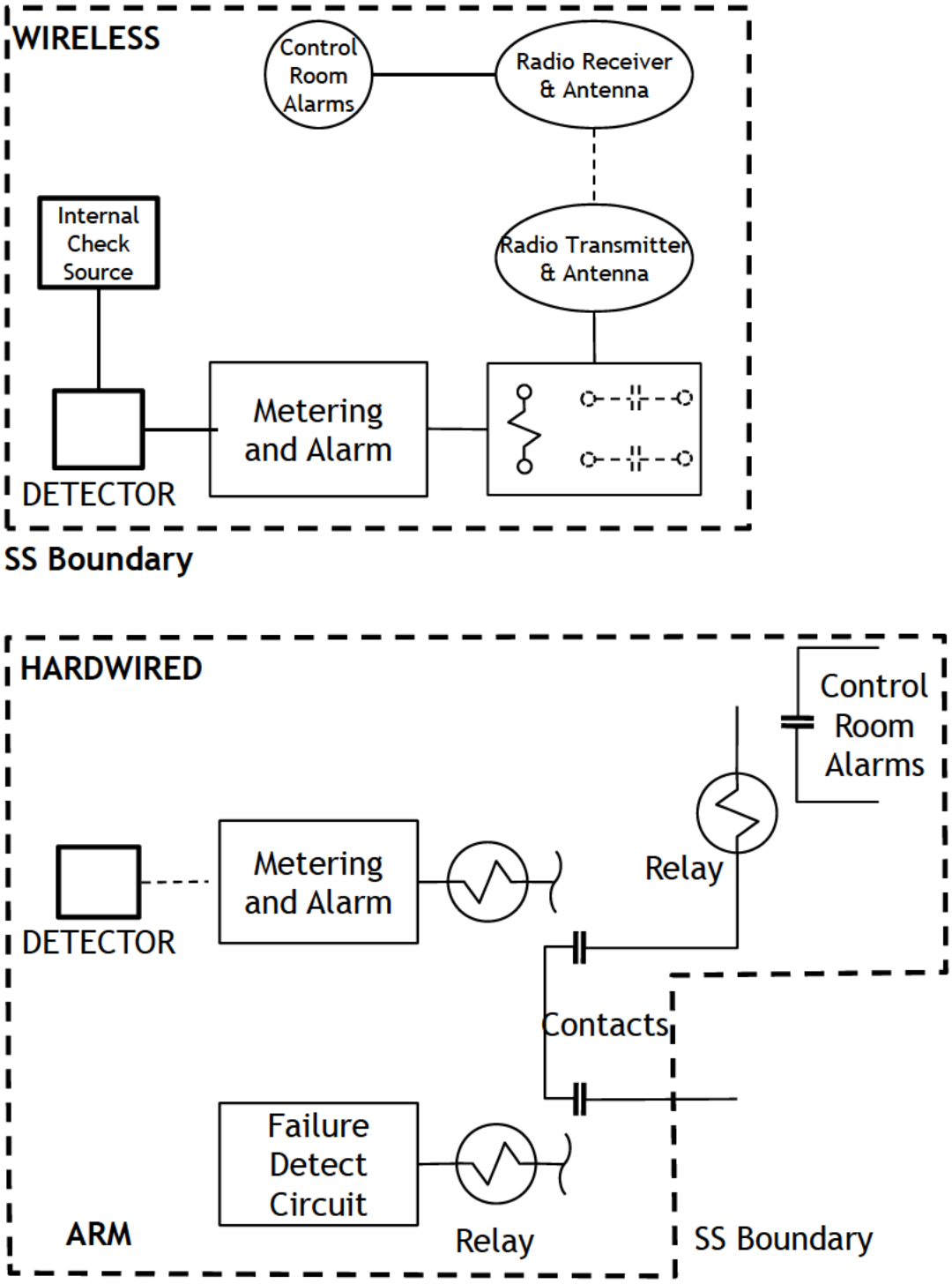

Figure 4.4-9 Area Radiation Monitor and Alarm Circuit (Typical)

Figure 4.4-10 Deleted

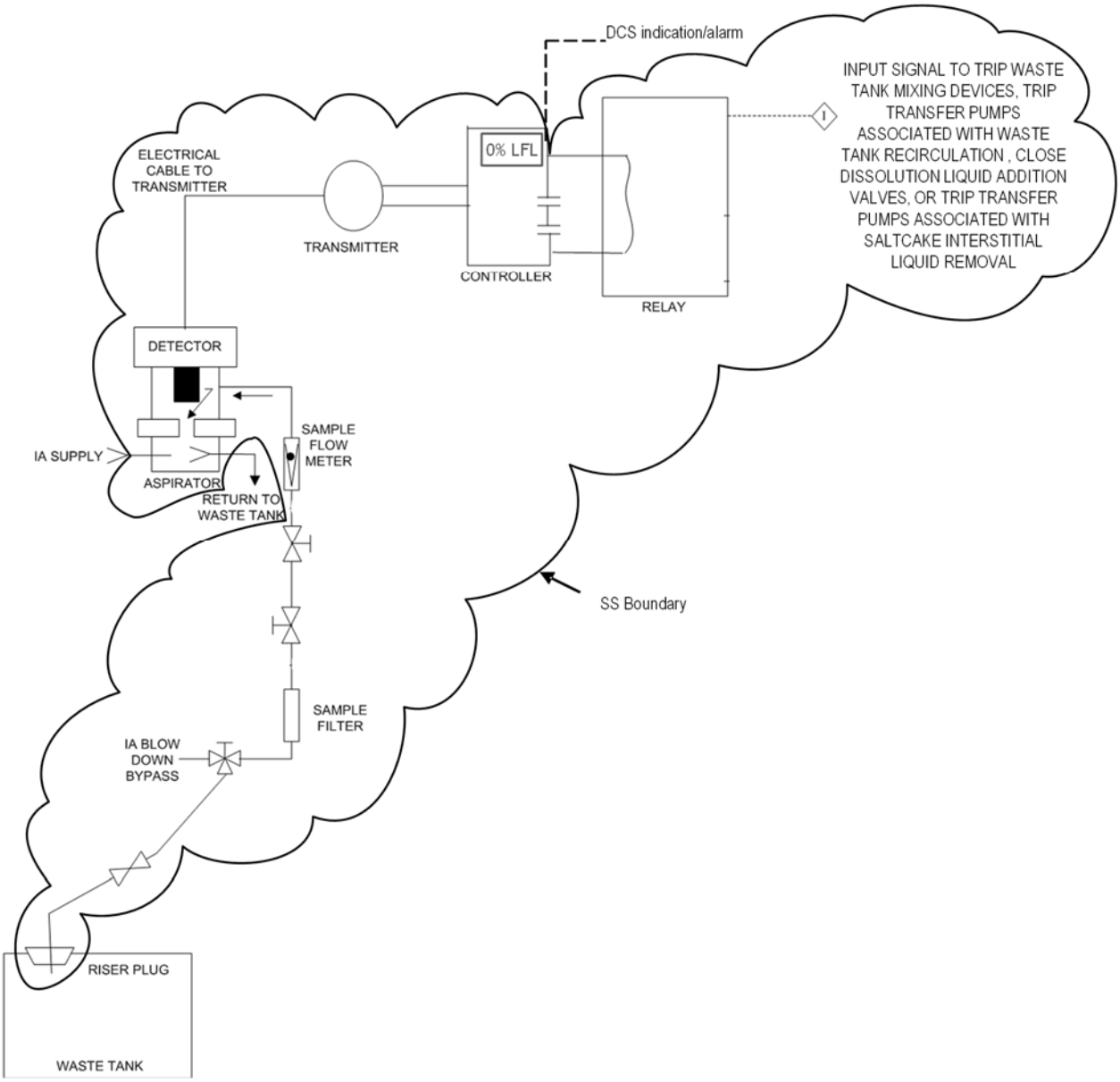

Figure 4.4-11 Waste Tank Installed Hydrogen Monitor Instrumentation Loop (Typical)

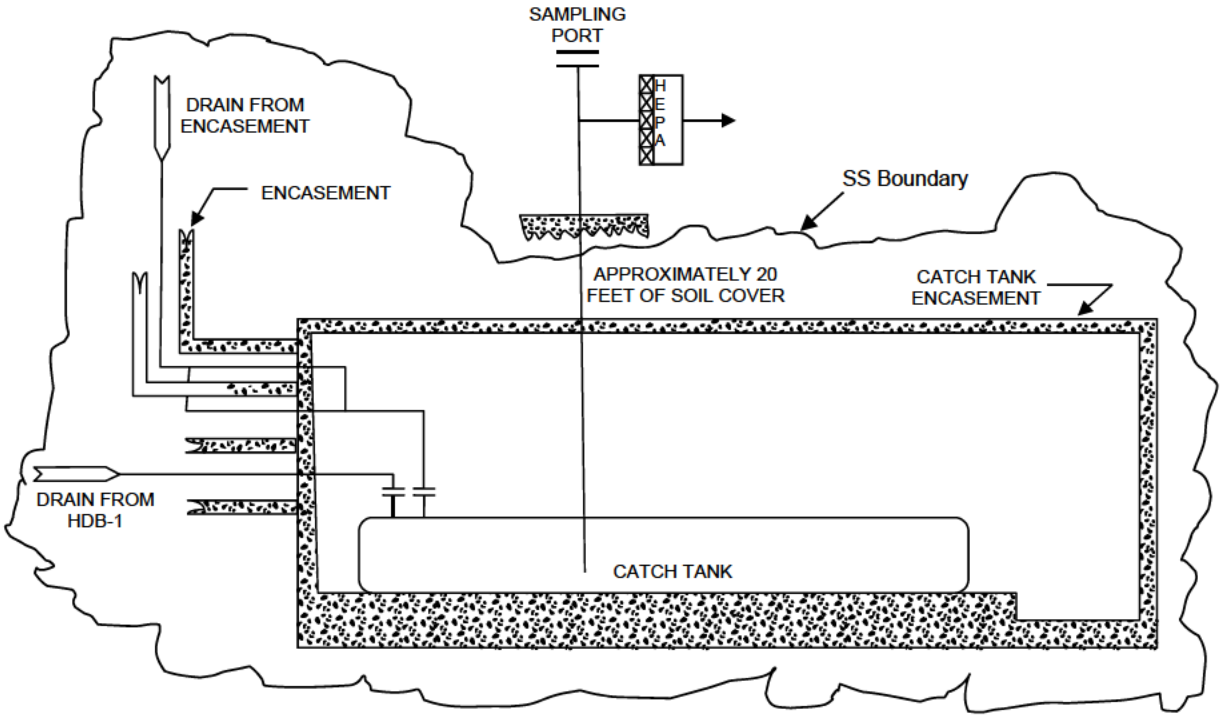

Figure 4.4-12 Catch Tank and Transfer Line Encasements

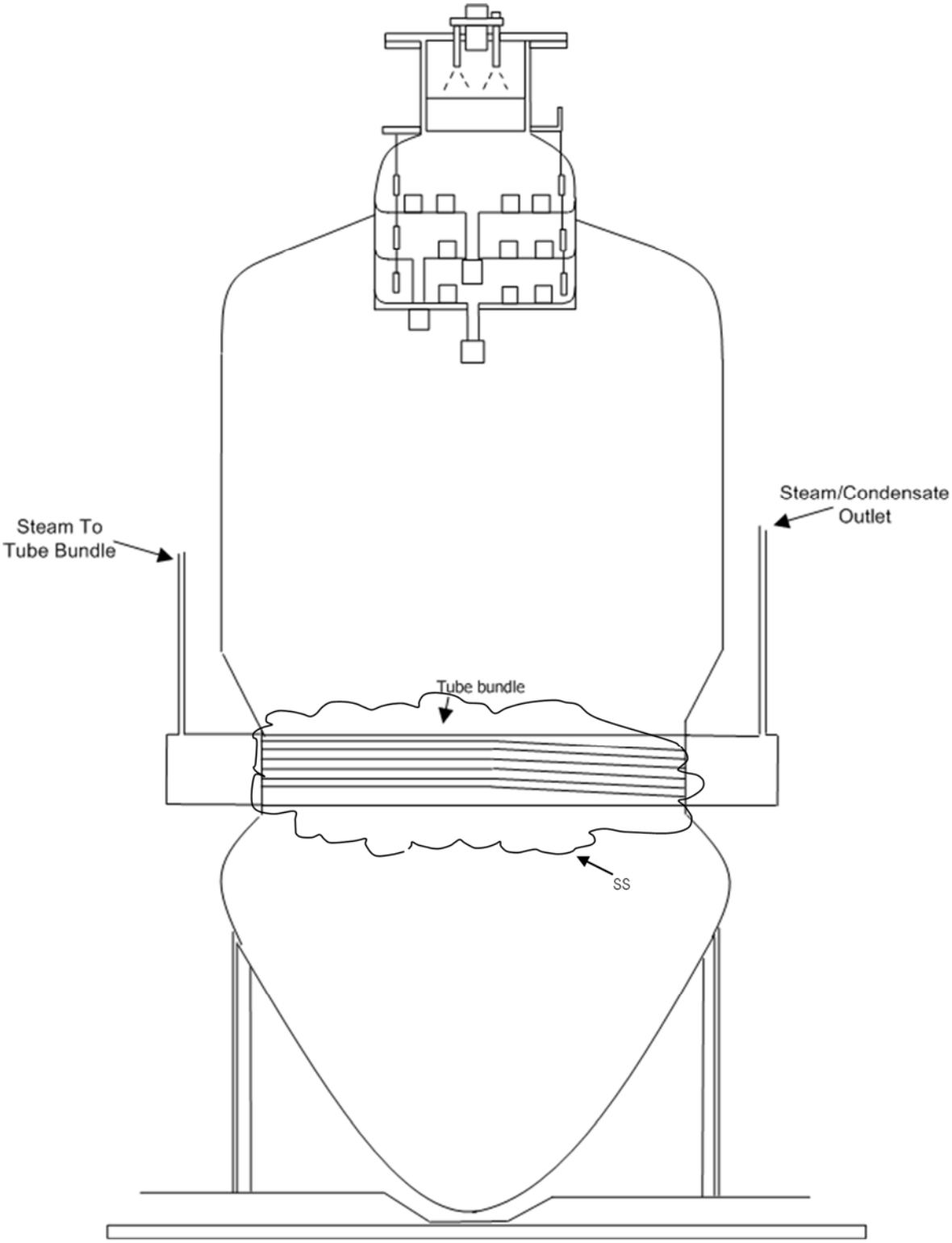

Figure 4.4-13 Evaporator Tube Bundle (Typical)

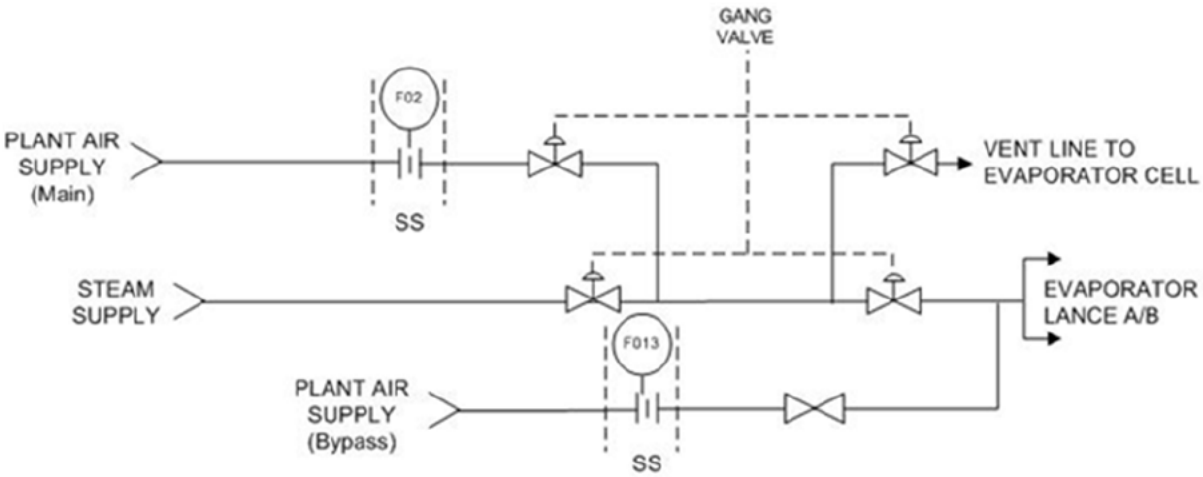

16H EVAPORATOR STEAM LANCE GANG VALVE
AIR INLET ORIFICE/BYPASS ORIFICE

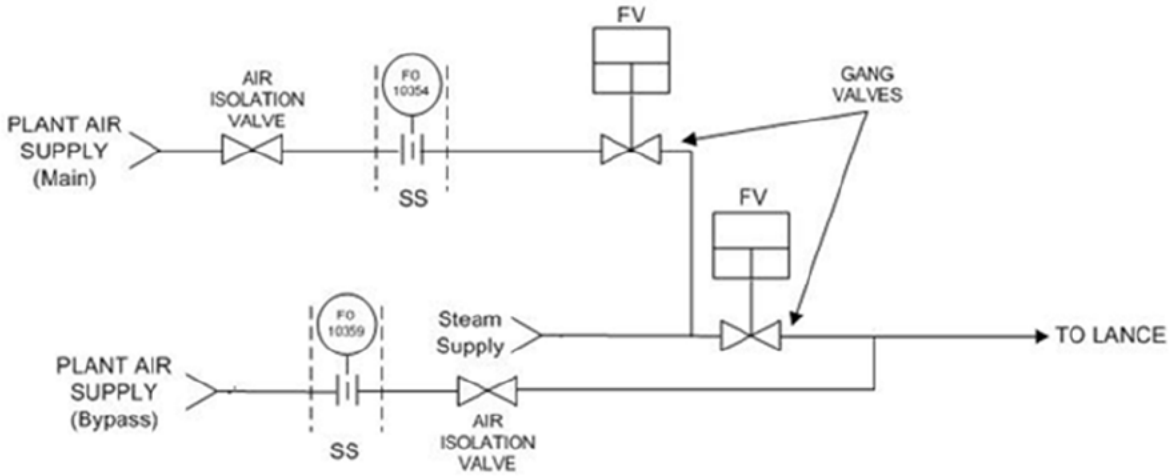

25H EVAPORATOR STEAM LANCE GANG VALVE
AIR INLET ORIFICE/BYPASS ORIFICE

Figure 4.4-14 242-16H and 242-25H Evaporator Lance Air Supply Line Orifices

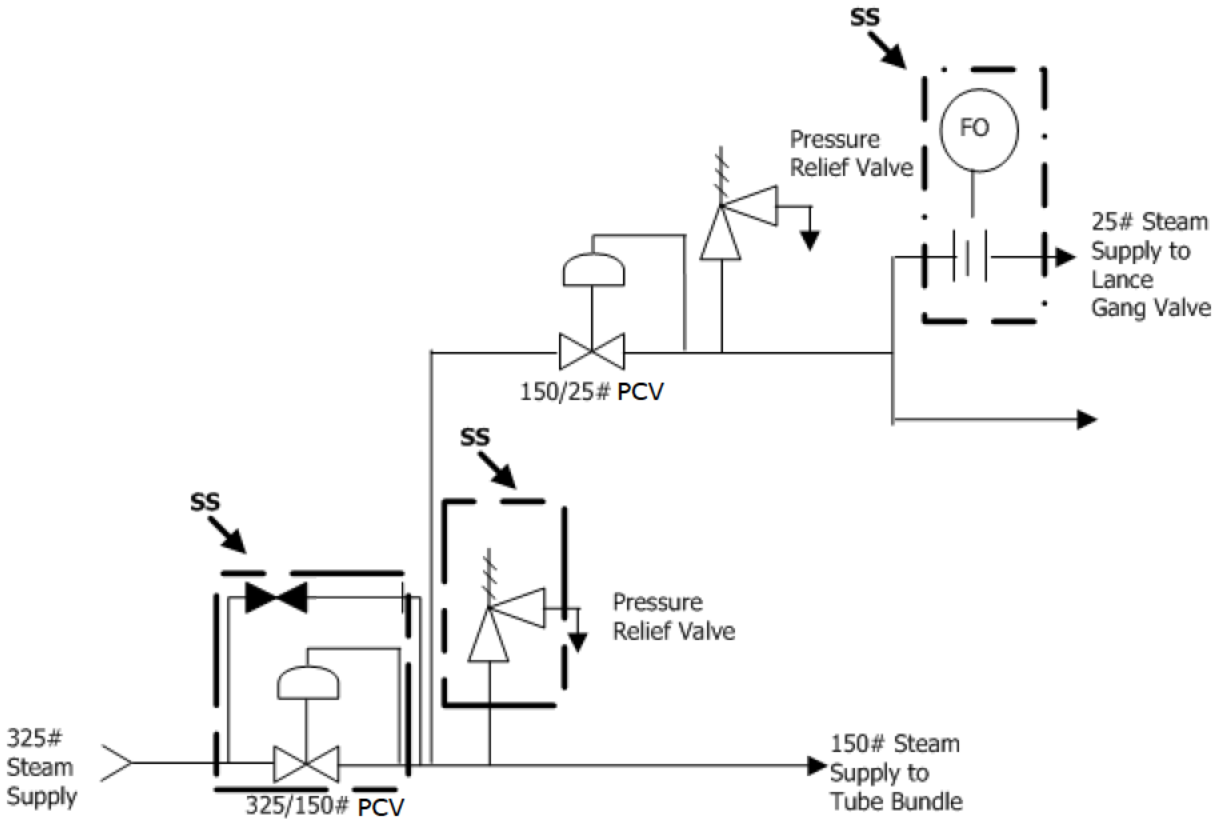

Figure 4.4-15 242-16H Evaporator Steam PCV, PRV, and Lance Steam Supply Line Orifice

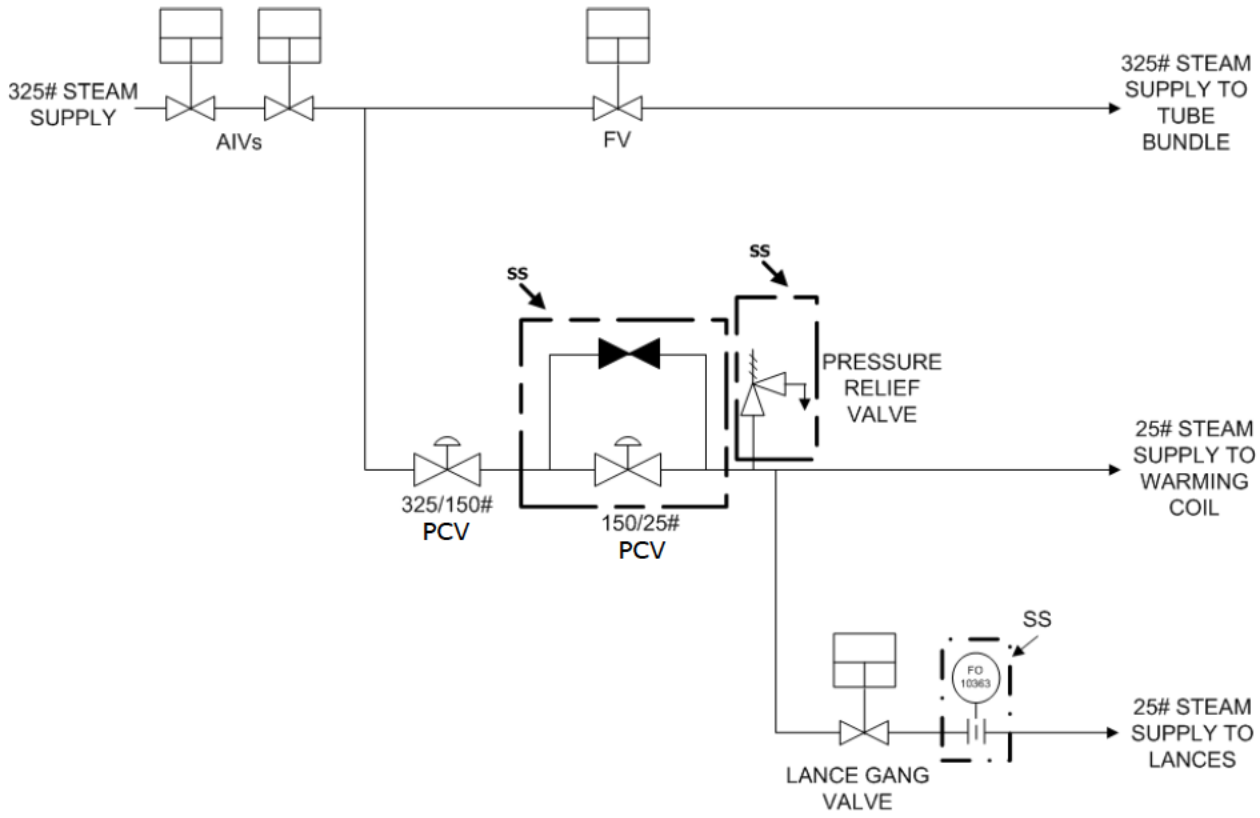

Figure 4.4-16 242-25H Evaporator Steam PCV, PRV, and Lance Steam Supply Line Orifice

Figure 4.4-17 Deleted

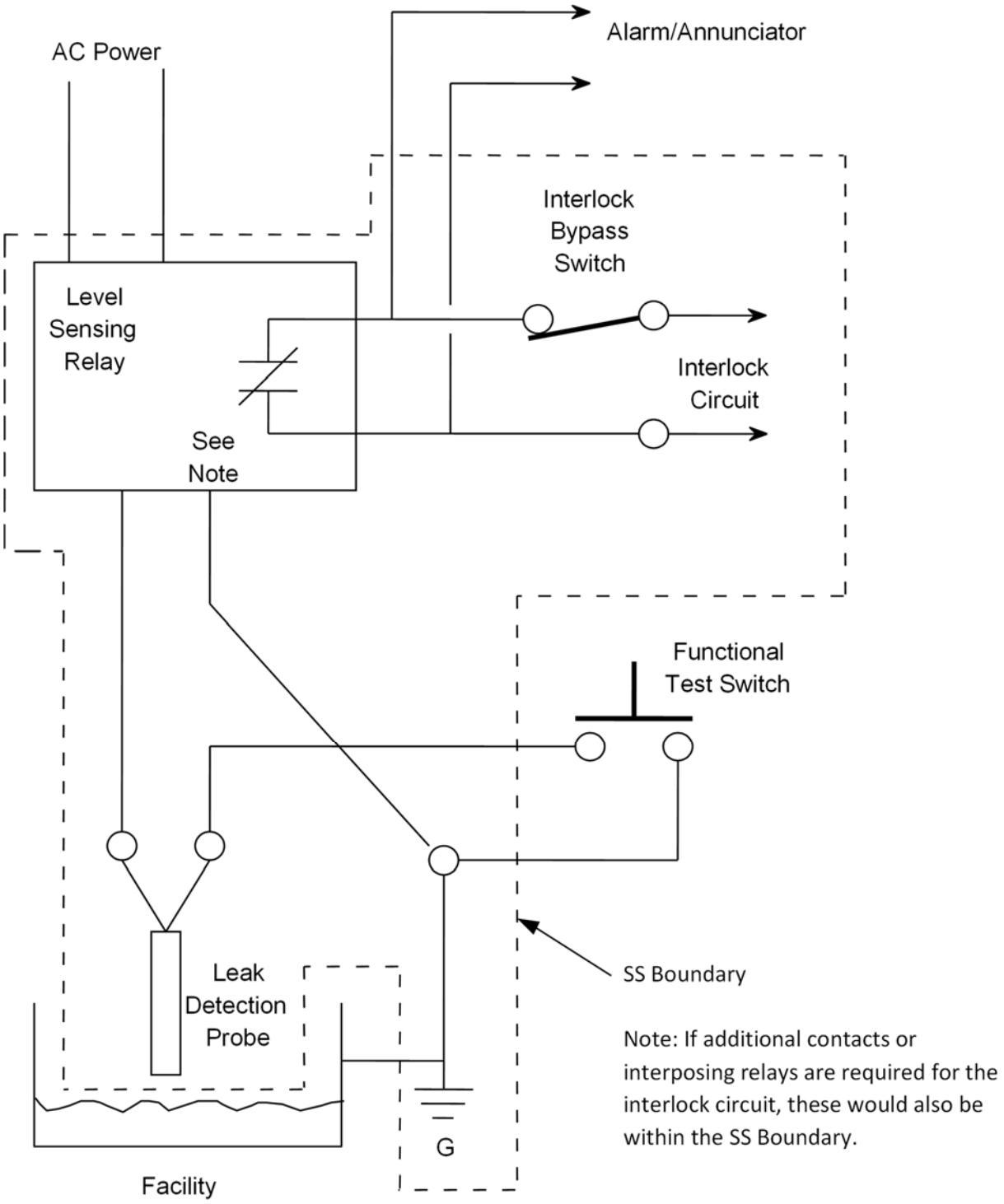

Figure 4.4-18 Submersible Mixer Pump Riser Conductivity Probe Interlock

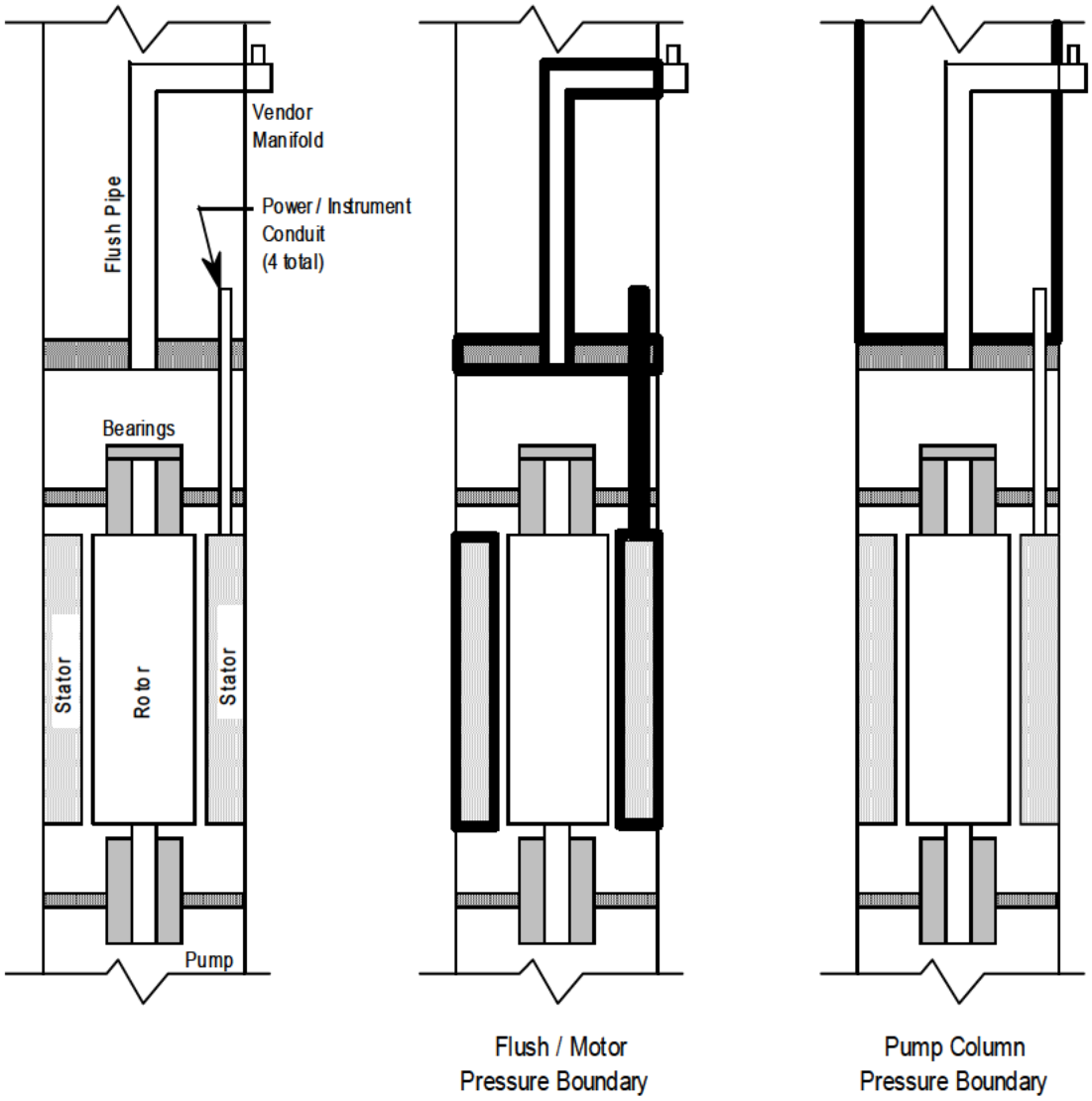

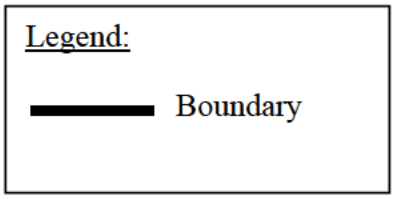

Figure 4.4-19 SMP Column and Flush/Motor Pressure Boundary

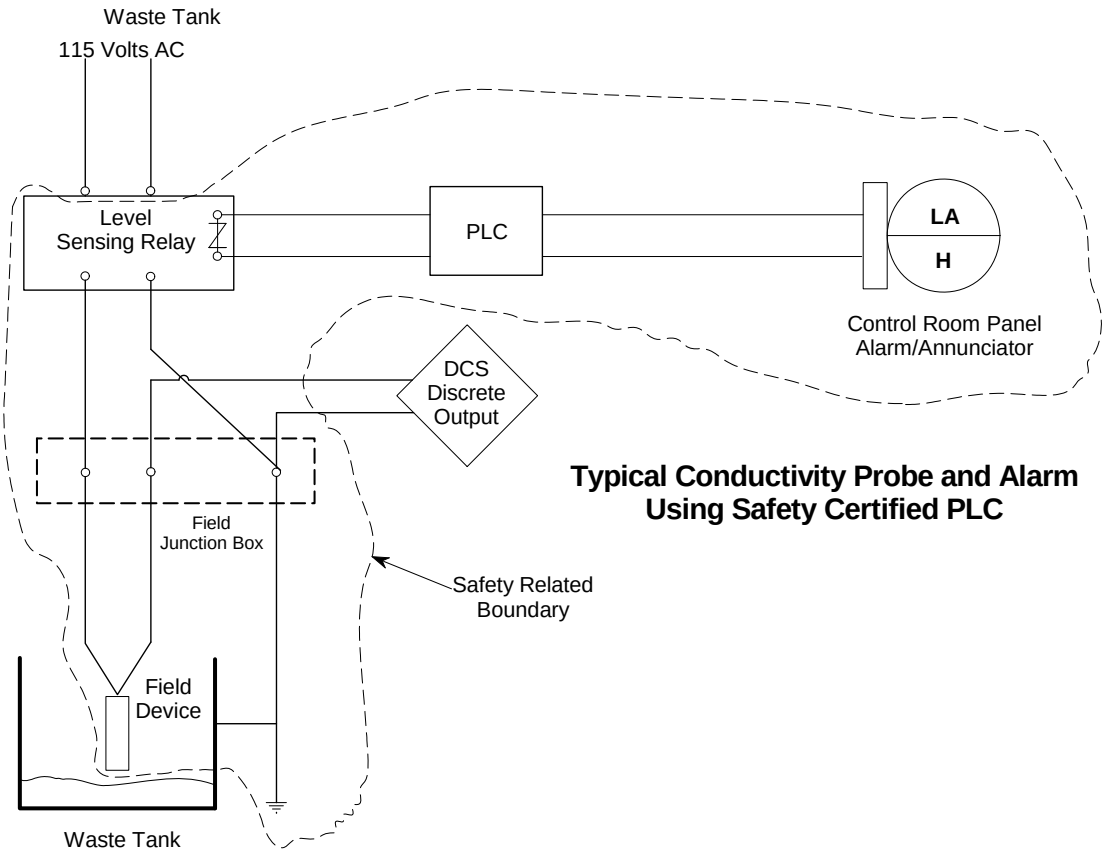

Note: Junction box enclosure is not SS.

Figure 4.4-20 Typical SS Alarm Configuration Using Safety PLC

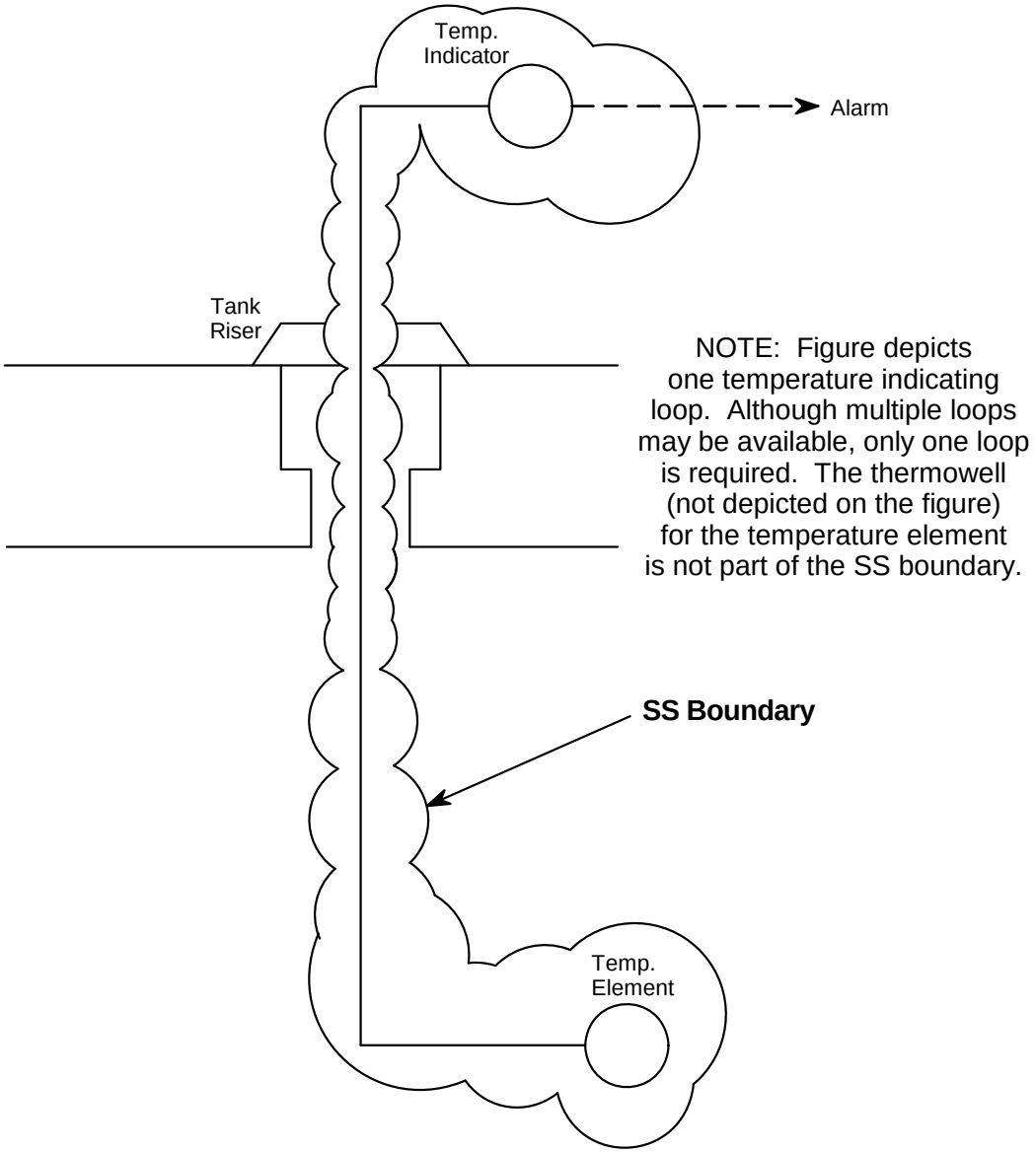

Figure 4.4-21 Tank 50 Waste Temperature Monitoring

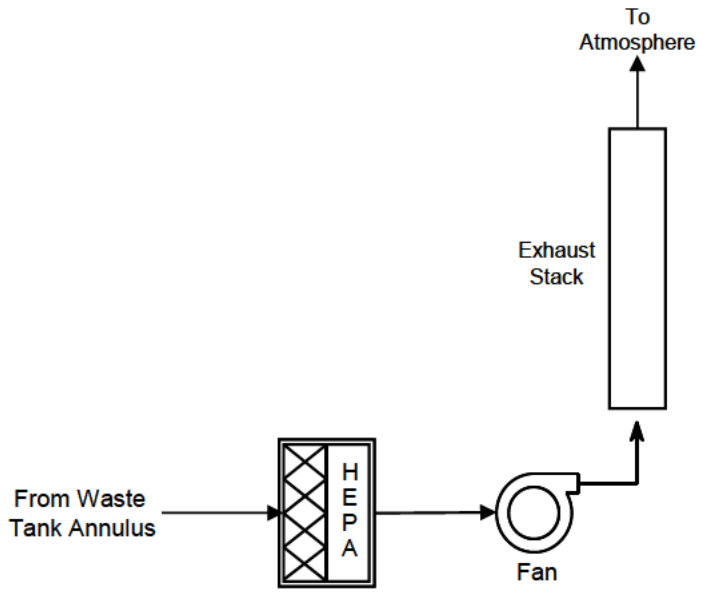

Figure 4.4-22 Type I, II Waste Tank Annulus Ventilation System

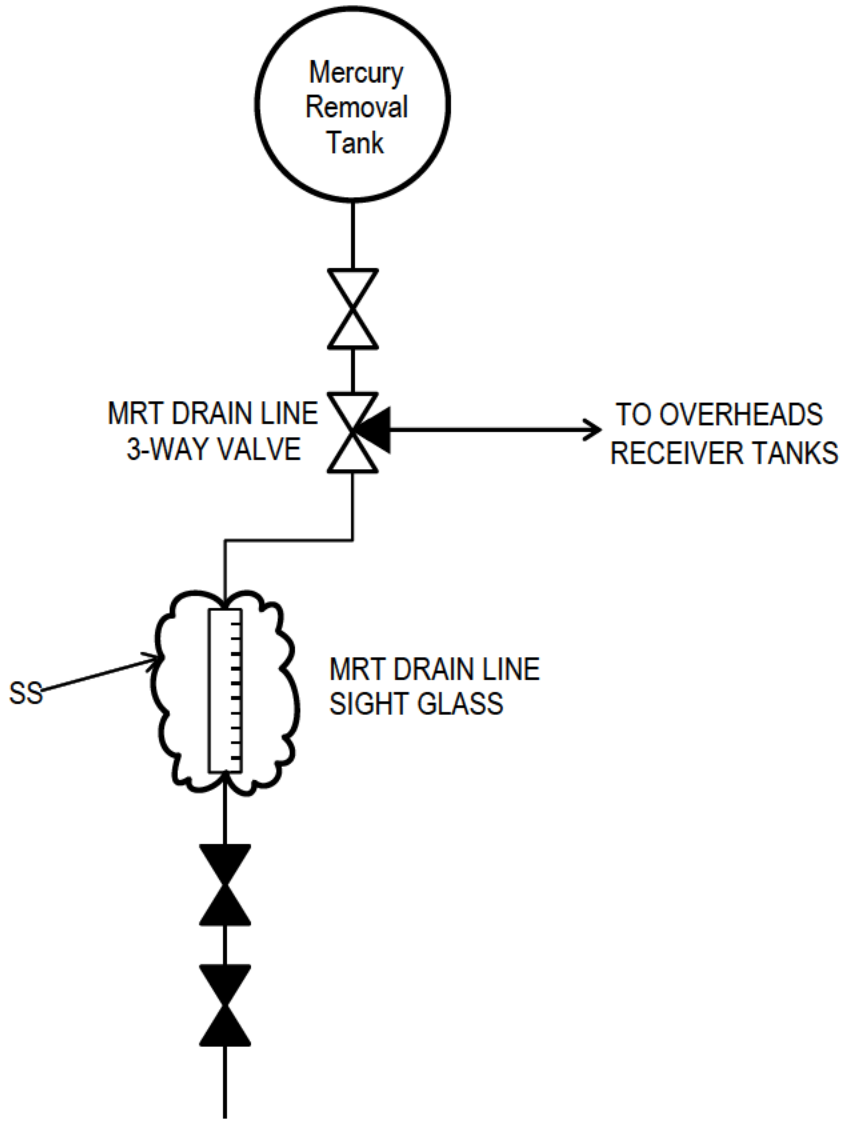

Figure 4.4-23 242-16H and 242-25H Evaporator Mercury Monitoring

CONCENTRATION, STORAGE, AND TRANSFER FACILITIES

DOCUMENTED SAFETY ANALYSIS

CHAPTER 5

DERIVATION OF TECHNICAL SAFETY REQUIREMENTS

Revision 20
August 2017

DISCLAIMER

This document was prepared by AECOM N&E Technical Services, LLC (N&E TS) under contract with Savannah River Remediation, LLC (SRR), subject to the warranty and other obligations of that contract and in furtherance of SRR's contract with the United States Department of Energy (DOE). N&E TS' findings represent its reasonable judgments within the time and budget context of its commission and utilizing the information available to it at the time. This document was prepared solely for the DOE for Contract DE-AC09-09SR22505.

Release to and Use by Third Parties. As it pertains to releases of this document to third parties, and the use of or reference to this document by such third parties in whole or in part, neither N&E TS, SRR, DOE, nor their respective officers, directors, employees, agents, consultants or personal services contractors (i) make any warranty, expressed or implied, (ii) assume any legal liability or responsibility for the accuracy, completeness, or usefulness, of any information, apparatus, product or process disclosed herein or (iii) represent that use of the same will not infringe privately owned rights. Reference herein to any specific commercial product, process, or service by trademark, name, manufacture or otherwise, does not necessarily constitute or imply endorsement, recommendation, or favoring of the same by N&E TS, SRR, DOE or their respective officers, directors, employees, agents, consultants or personal services contractors. The views and opinions of the authors expressed herein do not necessarily state or reflect those of the United States Government or any agency thereof.

CONTENTS

Page

5.0 DERIVATION OF TECHNICAL SAFETY REQUIREMENTS 5.1-1

5.1 INTRODUCTION 5.1-1

5.1.1 Objective 5.1-1

5.1.2 Scope 5.1-1

5.2 REQUIREMENTS 5.2-1

5.3 TECHNICAL SAFETY REQUIREMENT COVERAGE 5.3-1

5.3.1 Safety Limits Coverage 5.3-4

5.3.2 Limiting Control Settings Coverage 5.3-4

5.3.3 Limiting Conditions for Operation and Surveillance Requirement Coverage 5.3-4

5.4 DERIVATION OF PROCESS AREAS/MODES 5.4-1

5.4.1 Pump Tank Modes 5.4-2

5.4.2 Transfer Line Modes 5.4-2

5.4.3 Waste Storage Tanks Modes 5.4-5

5.4.4 Evaporator Modes 5.4-10

5.5 TECHNICAL SAFETY REQUIREMENT DERIVATION 5.5-1

5.5.1 Pump Tank and Transfer Facility Components Technical Safety Requirement Derivation 5.5-1

5.5.1.1 Pump Pit Sumps (Limiting Condition for Operation 3.7.1) 5.5-2

5.5.1.2 Diversion Box Sump Level (Limiting Condition for Operation 3.7.2) 5.5-3

5.5.1.3 Diversion Box Leak Detection Instruments (Limiting Condition for Operation 3.7.3) 5.5-5

5.5.1.4 Valve Box, Drain Valve Box, and High Point Flush Pit Leak Detection Instruments (Limiting Condition for Operation 3.7.4) 5.5-6

CONTENTS (continued)

Page

5.5.1.5 Transfer Facility Ventilation (Excluding H-Area Diversion Box-8 Complex and H-Area Diversion Box-7) (Limiting Condition for Operation 3.7.5) 5.5-8

5.5.1.6 H-Area Diversion Box-8 Complex Process Vessel Ventilation System (Limiting Condition for Operation 3.7.6)..... 5.5-14

5.5.1.7 H-Area Diversion Box-7 Ventilation System (Limiting Condition for Operation 3.7.7) 5.5-21

5.5.1.8 Pump Tank Pulse Tube Agitator Interlock (Limiting Condition for Operation 3.7.8) 5.5-24

5.5.1.9 Area Radiation Monitoring – Above-Ground Transfer Lines (Limiting Condition for Operation 3.7.9) 5.5-27

5.5.1.10 Leak Detection Box, Modified Leak Detection Boxes, Leak Probe Sleeve, and Tank Risers (Limiting Condition for Operation 3.7.10) 5.5-28

5.5.1.11 Leak Detection Box Drain Cell (Limiting Condition for Operation 3.7.11)..... 5.5-30

5.5.1.12 242-16H Evaporator Cell Sump Level (Limiting Condition for Operation 3.7.12)..... 5.5-31

5.5.1.13 242-16H Evaporator Feed Pump Backflow Prevention Devices (Limiting Condition for Operation 3.7.13) 5.5-32

5.5.1.14 Valve Box, Drain Valve Box, and High Point Flush Pit Level (Limiting Condition for Operation 3.7.14) 5.5-33

5.5.2 Waste Storage Tank Technical Safety Requirement Derivation 5.5-35

5.5.2.1 Waste Tank Purge Ventilation System (Limiting Condition for Operation 3.8.1)..... 5.5-35

5.5.2.2 Hydrogen Monitoring - Rapid Generation Tanks (Limiting Condition for Operation 3.8.2) 5.5-42

CONTENTS (continued)

Page

5.5.2.3 Hydrogen Monitoring - Slow Generation Tanks (Limiting Condition for Operation 3.8.3) 5.5-44

5.5.2.4 Waste Storage Tank Level (Limiting Condition for Operation 3.8.4)..... 5.5-46

5.5.2.5 Annulus Level/Ventilation (Limiting Condition for Operation 3.8.5)..... 5.5-49

5.5.2.6 Annulus Leak Detection Instruments (Limiting Condition for Operation 3.8.6)..... 5.5-52

5.5.2.7 Chromate Cooling Water Siphon Breakers (Limiting Condition for Operation 3.8.7) 5.5-53

5.5.2.8 Deleted 5.5-55

5.5.2.9 Waste Tank Purge Ventilation System – Gas Release (Limiting Condition for Operation 3.8.9) 5.5-55

5.5.2.10 Hydrogen Monitoring – Gas Release (Limiting Condition for Operation 3.8.10)..... 5.5-60

5.5.2.11 Area Radiation Monitoring – Waste Storage Tanks (Limiting Condition for Operation 3.8.11) 5.5-64

5.5.2.12 Submersible Mixer Pump Risers (Limiting Condition for Operation 3.8.12)..... 5.5-66

5.5.2.13 Waste Tank Portable Ventilation Equipment (Limiting Condition for Operation 3.8.13) 5.5-67

5.5.2.14 Tank 50 Waste Temperature Monitoring (Limiting Condition for Operation 3.8.14) 5.5-70

5.5.2.15 Waste Tank Purge Ventilation System – Acidic Chemical Cleaning (Limiting Condition for Operation 3.8.15) 5.5-72

5.5.2.16 Hydrogen Monitoring – Acidic Chemical Cleaning (Limiting Condition for Operation 3.8.16) 5.5-75

CONTENTS (continued)

Page

5.5.2.17 Waste Storage Tank Level – Acidic Chemical Cleaning (Limiting Condition for Operation 3.8.17) 5.5-77

5.5.2.18 Annulus Level/Ventilation– Acidic Chemical Cleaning (Limiting Condition for Operation 3.8.18) 5.5-80

5.5.2.19 Waste Temperature Monitoring – Acidic Chemical Cleaning (Limiting Condition for Operation 3.8.19) 5.5-84

5.5.3 Electrical Power Technical Safety Requirement Derivation 5.5-85

5.5.3.1 Standby Electrical Power (Limiting Condition for Operation 3.9.1)..... 5.5-85

5.5.4 Facility Administrative Controls..... 5.5-91

5.5.4.1 Procedure Controls (Administrative Control 5.8.1) 5.5-91

5.5.4.2 Programs and Manuals (Administrative Control 5.8.2) 5.5-92

5.5.5 Minimum Shift Crew 5.5-182

5.5.6 Mercury Monitoring Systems Technical Safety Requirement Derivation 5.5-185

5.5.6.1 242-16H and 242-25H Evaporator Mercury Inventory (Limiting Condition for Operation 3.6.1) 5.5-185

5.6 DESIGN FEATURES..... 5.6-1

5.6.1 Vital Components 5.6-1

5.6.2 Configuration and Physical Arrangement..... 5.6-1

5.6.3 Site Characteristics..... 5.6-1

5.7 INTERFACE WITH TECHNICAL SAFETY REQUIREMENTS FROM OTHER FACILITIES..... 5.7-1

5.7.1 Transfer of Radioactive Waste Into the Concentration, Storage, and Transfer Facilities 5.7-1

CONTENTS (continued)

Page

5.7.2 Transfer of Radioactive Waste Out Of the Concentration, Storage, and Transfer Facilities 5.7-3

5.7.2.1 Interface With Defense Waste Processing Facility (Specific Administrative Control 5.8.2.47) 5.7-3

5.7.2.2 Interface With Saltstone Facility (Specific Administrative Control 5.8.2.47) 5.7-6

5.7.2.3 Interface With Effluent Treatment Project 5.7-8

5.8 REFERENCES 5.8-1

5.9 TABLES 5.9-1

TABLES

Page

Table 5.9-1 Summary of Technical Safety Requirements 5.9-1

ACRONYMS AND ABBREVIATIONS

AC	Administrative Control
API	American Petroleum Institute
ARM	Area Radiation Monitor
ARP	Actinide Removal Process
ATS	Automatic Transfer Switch
CAM	Continuous Air Monitor
CFR	Code of Federal Regulations
Ci	Curie
CLFL	Composite Lower Flammability Limit
COP	Clean Out Port
CPC	Chemical Process Cell
CRW	Chromate Cooling Water
CSTF	Concentration, Storage, and Transfer Facilities
DB	Diversion Box
DBA	Design Basis Accident
DG	Diesel Generator
DID/ITS	Defense-in-Depth / Important-to-Safety
DOE	Department of Energy
DSA	Documented Safety Analysis
DSS	Decontaminated Salt Solution
DWPF	Defense Waste Processing Facility
EG	Evaluation Guideline
EM	Environmental Management
ERD	Emergency Response Data
ESP	Extended Sludge Processing
ETP	Effluent Treatment Project
FDB	F-Area Diversion Box
FPP	F-Area Pump Pit
FPT	F-Area Pump Tank
ft^3	cubic foot
gal	gallons

ACRONYMS AND ABBREVIATIONS (continued)

GDL	Gravity Drain Line
gpm	gallons per minute
HDB	H-Area Diversion Box
HEPA	High-Efficiency Particulate Air
HLLCP	High Liquid-Level Conductivity Probe
hr	hour
HPP	H-Area Pump Pit
HPT	H-Area Pump Tank
HRA	Human Reliability Assessment
IPI	Installed Process Instrumentation
LCO	Limiting Condition for Operation
LCS	Limiting Control Setting
LDB	Leak Detection Box
LEL	Lower Explosive Limit
LFL	Lower Flammability Limit
LPDT	Low Point Drain Tank
LPS	Leak Probe Sleeve
M	molar
M&TE	Measuring and Test Equipment
MAR	Material at Risk
MCU	Modular Caustic Side Solvent Extraction Unit
MLDB	Modified Leak Detection Box
MRT	Mercury Removal Tank
N/A	Not Applicable
NAS	Sodium Aluminosilicate
NCSA	Nuclear Criticality Safety Assessment
NCSE	Nuclear Criticality Safety Evaluation
NDTT	Nil Ductility Transition Temperature
NFPA	National Fire Protection Association
NMMP	Nuclear Maintenance Management Program
PAO	Polyalphaolefin
PP	Pump Pit
ppm	parts per million
psi	pounds per square inch

ACRONYMS AND ABBREVIATIONS (continued)

psig	pounds per square inch gauge
PVV	Process Vessel Ventilation
QA	Quality Assurance
rpm	revolutions per minute
RQ	Reportable Quantity
SAC	Specific Administrative Control
SC	Safety Class
scfh	standard cubic feet per hour
scfm	standard cubic feet per minute
SEHT	Strip Effluent Hold Tank
SHT	Solvent Hold Tank
SL	Safety Limit
SMP	Submersible Mixer Pump
SR	Surveillance Requirement
SRR	Savannah River Remediation LLC
SRS	Savannah River Site
SS	Safety Significant
SSC	Structure, System, and Component
STD	Standard
TPQ	Threshold Planning Quantity
TQ	Threshold Quantity
TSR	Technical Safety Requirement
USQ	Unreviewed Safety Question
VB	Valve Box
VFD	Variable Frequency Drive
vol. %	volume percent
WAC	Waste Acceptance Criteria
WCP	Waste Compliance Plan
WCS	Waste Characterization System
WCT	Waste Collection Tank
wt. %	weight percent

5.0 DERIVATION OF TECHNICAL SAFETY REQUIREMENTS

5.1 INTRODUCTION

5.1.1 OBJECTIVE

The purpose of Chapter 5 of the Concentration, Storage, and Transfer Facilities (CSTF) Documented Safety Analysis (DSA) is to provide information that will satisfy the requirements defined in Department of Energy (DOE) Title 10 Code of Federal Regulations (CFR) Part 830 and DOE-Standard (STD) -3009-94 (Ref. 1, 2). This chapter builds upon the control functions determined to be essential in Chapter 3, "Hazard and Accident Analyses," and Chapter 4, "Safety Structures, Systems, and Components (SSCs)," to derive Technical Safety Requirements (TSRs). This chapter also includes prohibited activities identified in Chapter 6, "Prevention of Inadvertent Criticality."

This chapter provides summaries and references pertinent sections of the DSA in which Design Features (SSCs) and Administrative Controls (ACs) are needed to prevent or mitigate consequences of an accident. It further provides the necessary level of detail to determine which attributes of the SSCs and administrative features require TSR control.

5.1.2 SCOPE

This chapter is based on the graded approach and includes the following:

- Information with sufficient basis to derive, as appropriate, any of the following TSR parameters:
  - Safety Limits (SLs)
  - Limiting Control Settings (LCSs)
  - Limiting Condition for Operation (LCO)
  - Surveillance Requirements (SRs)
- Information with a sufficient basis to derive TSR ACs for specific control features or to specify programs necessary to perform safety functions
- Identification of TSRs for passive Design Features addressed in this DSA
- Identification of TSRs from other facilities that affect the CSTF safety basis
- Derivation of facility Modes

The control functions discussed in this chapter are based on the control safety strategy outlined in Reference 3. As discussed in Reference 3, no TSR controls are derived within this chapter for the following Tank 48 events: Tank 48 Vapor Explosion, Tank 48 Solids Fire, Deflagration/Fire in Waste Tank Annulus (Tank 48), and Tank 48 Vapor Explosion and Solids Fire. The safety basis for these Tank 48 events is extracted from previous analyses and is contained in Chapter 18. The associated controls are contained within the CSTF TSRs, as appropriate

(Ref. 4). For other events (i.e., non-flammability-related events), Tank 48 is considered to be within the scope of this chapter.

5.2 REQUIREMENTS

This section identifies the DOE Orders, design codes, standards, and regulations and supporting documents that are required to establish the safety basis of the CSTF. The primary requirements applicable to the derivation of TSRs are contained in the following documents:

- 10 CFR 830, Nuclear Safety Management (Ref. 1)
- DOE-STD-3009-94, Preparation Guide for U.S. Department of Energy Nonreactor Nuclear Facility Documented Safety Analyses (Ref. 2)
- DOE G 423.1-1A, Implementation Guide for use in Developing Technical Safety Requirements (Ref. 6)
- WSRC-TM-93-9, Functional Classification Methodology Manual (Ref. 8)
- DOE-STD-1186-2004, Specific Administrative Controls (Ref. 52)

5.3 TECHNICAL SAFETY REQUIREMENT COVERAGE

This section provides assurance that TSR coverage for the facility is complete. The TSRs ensure that the safety functions outlined in Chapter 3 and 4 are operational, when required, and preserve the initial conditions for the accident scenarios. Chapter 3 identifies which SSCs and administrative features are Safety Class (SC) and Safety Significant (SS). Chapter 4 systematically evaluates the SSCs identified in Chapter 3 and identifies any compensatory measures required for the credited SSCs. These SSCs and administrative features are those that are required to prevent or mitigate Design Basis Accidents (DBAs) within CSTF, and therefore, they must be evaluated for TSR coverage. Table 5.9-1 provides a system listing of the safety equipment and features that the safety analysis requires. The equipment in Table 5.9-1 was evaluated to determine if TSRs were required to maintain the equipment operational. Section 5.5 provides a detailed discussion on the bases for requiring each TSR and how the actual limit was determined. Section 5.6 describes the passive design features of the facility, which include equipment and other features that, if altered or modified, would have a significant effect on the safe operation of the CSTF.

The graded approach was used for selection of LCOs versus ACs. Based upon the guidance in DOE G 423.1-1A (Ref. 6), a balance was sought between ensuring the availability of safety controls when needed and dilution of the emphasis on safety.

SSCs credited with prevention or mitigation in the accident analysis have been incorporated into the TSRs. The selection of LCOs is typically based upon the criteria in DOE G 423.1-1A (Ref. 6). There are some cases, however, where the benefit of LCO coverage is minimal in relation to the effort associated (e.g., situationally used). Special consideration for including a requirement into an AC versus an LCO was given to SSCs if they met one or more of the following criteria:

- The control is not credited for prevention/mitigation of a transient condition (e.g., needed to function immediately, rather than hours later)
- The condition does not require direct control/monitoring by the on-shift personnel
- The controls are variable but specified prior to initiation of certain operations (e.g., Waste Transfers)
- The conditions have simple and obvious required actions in the event the requirement is not met

The basis for the ACs is included, however, to ensure a basic understanding of what is controlled and why.

Based upon DOE Standard DOE-STD-1186-2004 (Ref. 52) and the methodology delineated in Reference 57, ACs have been further categorized as Programmatic Controls or Specific Administrative Controls (SACs). The justification for an AC being designated as a Programmatic Control (versus SAC) is contained within the AC program description in Section 5.5.4.2 of this chapter (justifications in this chapter supersede those in Reference 57). A SAC typically exists when:

- An AC is credited as a preventer or mitigator for a DSA accident (first and second levels of control), and
- The safety function of the AC would be classified as SS or SC if its function were provided by an SSC, or
- The AC protects a bounding initial condition for a DSA accident.

The discrimination between Programmatic Controls and SACs was developed with the intent of focusing more attention on this particular type of AC. This, in turn, improves the dependability of these controls and enhances their ability to perform the required safety function. Identification of each individual SAC, its safety function, and a discussion of its ability to perform that safety function are described in Section 5.5.4.2 of this chapter.

Equipment and/or parameters are selected for TSR coverage based on the required function and the affect a CSTF operator's action could have on the equipment in performing its function. In general, if the equipment is required to perform an active safety function (e.g., open or close valves, start or stop pumps), it was included in an LCO. LCOs are not developed for the passive features (e.g., tanks, structures). Parameters of the CSTF process that are controlled or influenced are also contained in LCO statements. Control of those parameters outside of immediate CSTF control (e.g., isotopic composition of the waste streams) are contained in the ACs of the TSR, along with those programs which are credited with performing primary or Defense-in-Depth safety functions in Chapter 3.

Many controls require verification of limits to meet requirements. If limits are met by programs (or their defining aspects) and do not require sample results then analytical uncertainty is not applicable. For example, transfers that meet the Sludge Carryover Minimization Program are by definition less than or equal to 1 wt. % sludge solids, and thus for Bounding Supernate are less than or equal to 9.8E+07 rem/gal. Another example would be Low-Rem Waste Transfer criteria (discussed in Section 5.4.2). For criteria not requiring sampling, analytical uncertainty is not applicable.

If sample results are utilized in the comparison against limits then an analytical uncertainty of 2 Sigma shall be included prior to the comparison. The following items do not require application of analytical uncertainty (with associated basis):

- Hydrogen Generation Rates and Hydrogen Percent in Trapped Gas – The calculation of hydrogen generation rates and hydrogen percent in trapped gas is based on defined equations (per Chapter 3). To account for the spread in the data that was used to create these equations a 10% increase was included (Ref. 91, 92). Due to this additional 10%, these calculations do not need to include additional analytical

uncertainty. This exception is not applicable for the hydrogen generation rate limit for waste tanks entering Closure Mode.

- pH – Checking for a pH limit is a gross check and does not need to include analytical uncertainty.

- Concentrated Supernate / Dilute Supernate – The saturation limits (average bulk concentration greater than or equal to 9.6M [Na] or average bulk density of greater than or equal to 1.45 g/mL) used to define Concentrated Supernate with respect to saltcake dissolution (Section 3.4.1.5.3) are indicative of general chemical tendencies, and not finite thresholds above which abrupt changes are expected. Thus, use of nominal values is acceptable and does not need to include analytical uncertainty.

- Corrosion Control Program – Corrosion is a comparatively slow phenomenon and limits are based on general chemistry regimes without distinctive thresholds between them. Thus, use of nominal values is acceptable and does not need to include analytical uncertainty.

- Evaporator Feed Qualification Program (for historical maximum data and hydroxide concentration) – Historical data is recorded in terms of nominal values. This program is generally structured around observing incremental risk where a threshold acceptable chemistry cannot be established. Therefore, in order to provide meaningful results (i.e., indication of shifts in chemistry behavior), analytical uncertainty should not be applied to new data for this comparison. Hydroxide concentration is representing broad chemistry regimes, not specific over a defined limit threshold. Thus, use of nominal values is acceptable and does not need to include analytical uncertainty.

- Waste Tank Chemical Cleaning Program (oxalic acid concentration) – Values used within this program represent broad chemistry regimes related to applicability of test data to DSA assumptions. These values do not represent thresholds over which a specific limit is crossed. Thus, these values do not need to include analytical uncertainty.

- Flammable Vapor Sampling Program – The inhalation dose potential limit within this program is a gross threshold used for a second level of control for the accident analysis. This is a conservative limit and does not need to include analytical uncertainty.

- Contingency Transfers – Excluding waste tanks in Acidic Chemical Cleaning Mode, Bounding Supernate is assumed to leak into the annulus (see Section 3.4.2.12) and Contingency Transfers are assumed to be less than or equal to 9.8E+07 rem/gal. Therefore, no samples are required for these waste tanks and analytical uncertainty does not apply. If sampling is required to verify inhalation dose potential requirements to support a Contingency Transfer for a waste tank in Acidic Chemical Cleaning Mode, sample results shall account for analytical uncertainty.

For inhalation dose potential limit verifications, if a specific uncertainty is not included with the sample results (for use of the 2 Sigma application) then a generic conservative analytical uncertainty may be used as described in Reference 90. Analytical uncertainty shall only be included as described in Chapter 5 for specific programs and controls. Additional information on analytical uncertainty is included in Sections 5.4.2, 5.4.3, 5.5.4, and 5.7.

5.3.1 SAFETY LIMITS COVERAGE

As defined in 10 CFR 830 (Ref. 1), SLs are limits on process variables associated with those SC physical barriers, generally passive, that are necessary for the intended Facility function and that are required to guard against the uncontrolled release of radioactive materials. The DSA did not determine any single limit that, if exceeded, could directly cause the failure of a barrier that prevents the release of radioactive or hazardous material. Therefore, no SLs are required for the CSTF.

5.3.2 LIMITING CONTROL SETTINGS COVERAGE

As defined in 10 CFR 830 (Ref. 1), LCSs are associated with SLs, and shall be conservatively selected such that automatic or manual protective action will correct the abnormal situation before an SL is exceeded. No SLs have been identified for the CSTF; therefore, there are no LCSs.

5.3.3 LIMITING CONDITIONS FOR OPERATION AND SURVEILLANCE REQUIREMENT COVERAGE

LCOs are selected to detail the operability requirements for the given equipment and to ensure that the practical definitive parameter limits are included in the LCO statement. The SRs define the minimum requirements necessary for the system/equipment to be considered operable.

The LCOs chosen ensure that the equipment/parameters/systems required by the safety analysis are maintained within the safety envelope defined in Chapter 3. The SRs provide the assurance, on a routine basis, that the operability requirements detailed in Chapters 3 and 4 are met.

5.4 DERIVATION OF PROCESS AREAS/MODES

Facility operating Modes define the process objectives, operating parameters, and maintenance and production activities. In this manner, each Mode limits the operational activities of the facility or Process Area, based on their associated hazards, to safely and efficiently fulfill the process objectives.

Included within the CSTF are several Process Areas, each of which independently performs its specific function in accomplishing the mission of the CSTF. The Process Areas controlled by the TSRs are as follows:

- Pump Tanks (including associated pump pits [PPs])
- Transfer Lines (including transfer facilities, other than pump tanks, as defined by the Transfer Path)
- Waste Tanks

These Process Areas and associated Modes are discussed in the following sections. Although pump tanks and transfer lines are listed as separate Process Areas (have different Modes), they will be grouped together for the purposes of TSR derivation (and within Table 5.9-1).

The 241-96H Actinide Removal Process (ARP) Facility, 241-278H Modular Caustic Side Solvent Extraction Unit (MCU), and the 299-H Waste Management Facility are major Process Areas of the facility that are excluded from Modes based on the results of the safety analysis. These Process Areas are controlled in the TSRs through ACs and Design Features.

Integral to the Process Areas and Modes discussed in the following sections is the concept of Waste Transfers. Waste Transfers are considered to be the planned movement of liquid waste along a Transfer Path (described in Section 5.4.2).

CSTF contains certain locations that are inactive. As an inactive location, Waste Transfers to or through the inactive locations are prohibited. Inactive locations include: F-Area Diversion Box (FDB) FDB-1, FDB-5, FDB-6, H-Area Diversion Box (HDB) HDB-1, HDB-3, H-Area Pump Pit (HPP) HPP-1, Valve Box (VB) VB-15/16, F-Area Catch Tank, 242-F Evaporator, 242-16F Evaporator, 242-H Evaporator, F-Area Concentrate Transfer System, and H-Area Concentrate Transfer System. Non-waste transfers are permitted from these locations and include activities such as rainwater removal.

5.4.1 PUMP TANK MODES

Pump tanks are intermediate pump stations used to transfer waste in the CSTF Waste Transfer System. Each pump tank is within a reinforced concrete structure (PP) that is located below grade to provide secondary containment. The pump tanks have three Modes. The hierarchy of Modes for the pump tanks from the highest to the lowest is Operation, Standby, and Repair.

The Modes for the pump tanks are defined as follows:

OPERATION

1. Receipt of Waste Transfers is permitted.
2. Transfers out of the pump tank using pumps or jets are permitted.
3. Waste Transfers for which the associated PP sump is a credited Leak Detection Location are permitted.
4. Operation of pump tank agitators is permitted.

STANDBY

1. Receipt of Waste Transfers into the pump tank is restricted to that necessary to stabilize plant conditions or allow deinventory/flushing as needed to support facility repairs.
2. Transfers out of the pump tank using pumps or jets are permitted.
3. Waste Transfers for which the associated PP sump is a credited Leak Detection Location are permitted.
4. Operation of pump tank agitators is prohibited.

REPAIR

1. The contents of the pump tank and PP sump shall be within the limits of the Repair Plan.
2. Activities in the pump tank (including agitator operations), activities in the PP sump, and activities along transfer lines for which the PP is a credited Leak Detection Location shall be within the limits of the controls stated in the Repair Plan.

5.4.2 TRANSFER LINE MODES

The CSTF Waste Transfer System consists of hundreds of individual transfer lines that are highly interconnected, with the connections usually located in VBs or Diversion Boxes (DBs). To support transfers (e.g., Waste Transfers), valves are aligned, as needed, to direct the flow of

waste from the sending tank to the receiving tank. Some transfers only utilize a single transfer line, while others utilize multiple transfer lines. Waste Transfers are considered to be the planned movement of liquid waste along a Transfer Path.

The Waste Transfer is not postulated to initiate an event (e.g., leak, overflow, and deflagration) outside of the Transfer Path endpoints defined below. The boundaries of a Transfer Path Process Area vary, dependent on the source of the transferred material, destination of the transferred material, and transfer line segments used for the transfer. In addition, Leak Detection Locations (also discussed below) are associated with the established Transfer Paths to detect liquid waste outside of the primary containment. Transfers are considered to be "associated with" an affected Process Area if: a) the transfer travels through or ends within the affected Process Area, or b) the affected Process Area is a credited Leak Detection Location for the transfer.

Transfer Path

Transfer Paths are established for the planned movement of waste through the transfer system (excluding the venting and draining of transfer lines associated with Low-Rem Waste Transfers or Chemical Cleaning Transfers, where there is no potential to siphon waste). The Transfer Path is defined as a combination of the transfer lines (and interfacing piping) whose primary containment constitutes a continuous liquid transfer flow path.

The Transfer Path begins at the plane where the transfer line exits primary containment (e.g., the waste tank/pump tank/evaporator pot wall) or at the jet for sump transfers. The Transfer Path ends at the plane where the transfer line enters primary containment (e.g., the waste tank/pump tank/evaporator pot wall). Waste tank primary containment includes tank risers sufficiently open to the waste tank such that they do not have the potential for pluggage and overflow. The Transfer Path includes piping branches up to the first sound isolation point (e.g., closed valve, blank), which is supported by the fact that transfer evolutions are closely monitored activities. Transfer lines that are not "Out-of-Service" are assumed to maintain their primary containment function up to an acceptable waste location (e.g., waste tank, pump tank). Transfer lines designated as "Out-of-Service" shall be isolated by a single leak-tested valve, double valve isolation, or blank. As an example, a DB downstream of the first isolation point of the Transfer Path is not considered a Leak Detection Location for the Transfer Path. It is recognized that jumpers and connectors within secondary containment (e.g., VBs, DBs, tank risers) may experience minor leakage. As discussed in Chapter 4, transfer line jumpers and connectors along a Transfer Path are permitted to have "drip-wise" leakage. "Drip-wise" leakage shall not be a continuous flow of material or spray. "Drip-wise" leakage shall not exceed the sump inventory limits, presented in Chapter 3, within a 30-day period (residual verification frequency).

Vent and drain activities associated with High-Rem Waste Transfers, required to ensure that the waste is removed from the Transfer Path at the completion of a transfer, are considered a Waste Transfer. A maximum volume of 2,540 gallons (gal) of waste is associated with these activities (Ref. 9). This is not a sufficient quantity to result in challenging the Offsite Evaluation Guidelines (EGs), but exceeds the Onsite EGs. An above ground leak of 15,000 gallons of 16.7 weight percent (wt. %) solids results in an Onsite dose of 1,690 rem (Ref. 10); 2,540 gallons would be approximately one sixth of the dose, thus exceeding the Onsite EGs of 100 rem.

Vent and drain activities associated with Low-Rem Waste Transfers and Chemical Cleaning Transfers, required to ensure that the waste is removed from the Transfer Path at the completion of a transfer, are not considered a Waste Transfer unless there is a potential to siphon waste. Low-Rem material reduces the consequences by a factor of 7.5 from High-Rem material (discussed above). Chemical Cleaning Transfer material reduces the consequences by a factor of 15.3 from High-Rem material (discussed above). With maximum volume of 2,540 gal of waste associated with these activities (Ref. 9), there is not a sufficient quantity to result in challenging the Offsite or exceeding the Onsite EGs. During these activities, the normal Conduct of Operations practices associated with transferring of material shall be in place (similar to those discussed in Section 3.4.1.5.2).

Idle transfer pumps/jets are not considered to have a Transfer Path associated with them, except in the case where waste from a tank could be siphoned, pushed back, or entrained through the pump/jet by flushing activities.

Leak Detection Locations

In certain Leak Detection Locations, it is physically possible for a low flow-rate leak to drain out of the Leak Detection Location without accumulating sufficient depth of liquid to cause the actuation of a credited leak detection device. In these cases, the potential downstream location for accumulation of the leaked waste will have the same leak detection requirements as the first Leak Detection Location.

An example of the above is FDB-3. This DB has a drain in the bottom of its sump, which directs waste to FDB-2. The drain in FDB-3 does not have a weir or similar device to ensure the accumulation of some minimal depth of liquid within FDB-3 before the liquid can drain to FDB-2.

Leak Detection Boxes (LDBs) contain a drain line and an overflow line. The drain lines are plugged except when actively removing waste from the LDB. The drain line and overflow lines are tied together below the LDB and any released material is directed to a nearby location (e.g., PP sump, DB sump, waste tank, LDB Drain Cell). It is not expected that a significant leak could pass through the LDB without being detected by instrumentation. Some LDBs have the drain and overflow piping permanently plugged. The liquid will remain in the LDB ensuring its detection by the installed instrumentation.

The transfer lines have two Modes. The hierarchy of Modes for the transfer lines from the highest to the lowest is High-Rem Transfer and Operation. The Modes for the transfer lines are based on the discussion provided above and are defined below.

Several Modes require a verification of the material to meet Mode entry requirements. For inhalation dose potential requirements, an analytical uncertainty of 2 Sigma shall be included when comparing against a limit (additional information and exceptions are described in Section 5.3).

HIGH-REM TRANSFER

1. Transfer lines are permitted to be in the Transfer Path of Waste Transfers.

2. The inhalation dose potential for transferred material is permitted to be up to the maximum value analyzed in Chapter 3 (1.5E+09 rem/gal).

OPERATION

1. Transfer lines are permitted to be in the Transfer Path of Low-Rem Waste Transfers.

2. The inhalation dose potential for transferred material shall be less than or equal to 2.0E+08 rem/gal (including transfers that have been evaluated in Chapter 3 to meet Low-Rem Waste Transfer criteria). The following may be categorized as Low-Rem Waste Transfers (Ref. 11, 12, 13, and 74):

   - Transfers from other facilities that have been shown to be less than or equal to 2.0E+08 rem/gal by their Waste Compliance Plan.
   - Transfers out of H-Area waste tanks that meet the Sludge Carryover Minimization Program.
   - Transfers of evaporator bottoms.
   - F-Area transfers (restricted to less than or equal to 16.7 wt. % sludge-solids or have an inhalation dose potential that meets the Low-Rem Waste Transfer criteria [as determined by engineering evaluation]). Transfers out of Waste Tanks 33 and 34 when the suction of the transfer device (pump or jet) is below the sludge layer shall be verified by sampling to have an inhalation dose potential of less than or equal to 2.0E+08 rem/gal prior to the transfer.
   - Transfers out of waste tanks (including Waste Tanks 33 and 34) that do not meet the Sludge Carryover Minimization Program (e.g., minimum separation distance) but the suction of the transfer device (pump or jet) is at or above the sludge layer.
   - CSTF initiated transfers that have been verified by sampling to have an inhalation dose potential of less than or equal to 2.0E+08 rem/gal.

   During transfers through a pump tank, the inhalation dose potential of the waste stream leaving the pump tank is assumed to be the same as the inhalation dose potential of the material entering the pump tank (i.e., a Low-Rem Waste Transfer to a pump tank would be considered a Low-Rem Waste Transfer after leaving the pump tank).

5.4.3 WASTE STORAGE TANKS MODES

The CSTF utilizes a number of waste storage tanks for waste processing and storage (see Chapter 2 for details of waste storage tanks). The waste storage tanks have five Modes as

defined below. The hierarchy of Modes for the waste storage tanks from the highest to the lowest is Gas Release, Operation, Acidic Chemical Cleaning (only applies to Type I/II waste storage tanks), Non-Acidic Chemical Cleaning (only applies to Type I/II waste storage tanks), and Closure (only applies to Type I, II, and IV waste storage tanks).

Several Modes require a verification of the material in the waste tank, or material being transferred to the waste tank, to meet Mode entry requirements. For inhalation dose potential requirements, an analytical uncertainty of 2 Sigma shall be included when comparing against a limit (additional information and exceptions are described in Section 5.3). For Closure Mode hydrogen generation rate requirement, an analytical uncertainty of 2 Sigma shall be included when comparing against the limit.

GAS RELEASE

1. Sludge agitation, bulk saltcake dissolution, and saltcake interstitial liquid removal activities that exceed the Gas Release Criteria are allowed.

   Section 3.4.2.11 defines the Gas Release Criteria and the potential release quantity is determined by engineering evaluation per the Gas Release Program.

   Sludge agitation, bulk saltcake dissolution, and saltcake interstitial liquid removal activities in Tank 50 that could exceed the Tank 50 Gas Release Criteria are prohibited. Therefore, Tank 50 is prohibited from entering Gas Release Mode.

2. Direct receipt of oxalic acid is prohibited. Chemical Cleaning Transfers into the waste storage tank are prohibited.

3. All activities allowed in Operation Mode (except as addressed by Item 2 above) are permitted.

OPERATION

1. Transfers of waste and other liquids into and out of the waste storage tank are permitted (see criteria stated below for transfers/additions involving bulk saltcake dissolution or saltcake interstitial liquid removal activities).

2. Storage of waste is permitted.

3. Sludge agitation, bulk saltcake dissolution, and saltcake interstitial liquid removal activities that do not exceed the Gas Release Criteria are allowed. Sludge agitation, bulk saltcake dissolution, and saltcake interstitial liquid removal activities that exceed the Gas Release Criteria are prohibited.

   Section 3.4.2.11 defines the Gas Release Criteria and the potential release quantity is determined by engineering evaluation per the Gas Release Program.

4. Direct receipt of oxalic acid is prohibited. Chemical Cleaning Transfers into the waste storage tank are allowed.

The requirements of the Waste Tank Chemical Cleaning Program shall apply during receipt of Chemical Cleaning Transfers in this Mode.

ACIDIC CHEMICAL CLEANING

This Mode is only applicable to Type I/II waste storage tanks.

1. Storage of waste and chemical cleaning operations are allowed provided that:

   a. Inhalation dose potential of the waste is less than or equal to 3.98E+08 rem/gal.

   b. Sludge remaining in the waste tank is less than or equal to 10,000 gallons. Sludge heel volume shall be determined by engineering evaluation.

2. Liquid additions, including direct receipt of oxalic acid, into the waste storage tank are allowed.

3. Waste Transfers and Chemical Cleaning Transfers out of the waste storage tank are allowed.

4. Waste Transfers into the waste storage tank from other waste storage tanks are prohibited.

5. Waste Transfers and Chemical Cleaning Transfers from the annulus back to the primary side of the same waste storage tank are allowed (except for steam jetted transfers). Steam jetted transfers into and out of the waste storage tank (primary and annulus) are prohibited.

6. Operation of waste tank mixing devices and sludge agitation activities are allowed.

7. Bulk saltcake dissolution and saltcake interstitial liquid removal activities are prohibited.

8. Air and steam to the waste tank and annulus transfer jets shall be isolated.

9. Transfers of waste through a transfer line that traverses the annulus are prohibited.

NON-ACIDIC CHEMICAL CLEANING

This Mode is only applicable to Type I/II waste storage tanks.

1. Storage of waste is allowed provided that:

   a. Inhalation dose potential of the waste is less than or equal to 3.98E+08 rem/gal.

b. Sludge remaining in the waste tank is less than or equal to 10,000 gallons. Sludge heel volume shall be determined by engineering evaluation.

2. The waste contents of the waste storage tank have a pH greater than or equal to 7 (e.g., waste from previous chemical cleaning operations has been neutralized).

3. Acidic material in the annulus is prohibited (from previous chemical cleaning operations in the waste storage tank). If this Mode is entered from Acidic Chemical Cleaning Mode (that involved actual oxalic acid additions to the waste storage tank), verification shall be made that acidic material is not contained in the annulus.

4. If this Mode is entered from Acidic Chemical Cleaning Mode, the annulus shall have no measurable level increase for at least a 24-hour period following primary tank neutralization.

5. Waste Transfers out of the waste storage tank are allowed.

6. Waste Transfers into the waste storage tank from other waste storage tanks are prohibited.

7. Waste Transfers from the annulus back to the primary side of the same waste storage tank are allowed (except for steam jetted transfers). Steam jetted transfers into and out of the waste storage tank (primary and annulus) are prohibited.

8. Operation of waste tank mixing devices is allowed. Sludge agitation activities that do not exceed the Gas Release Criteria are allowed. Sludge agitation activities that exceed the Gas Release Criteria are prohibited.

   Section 3.4.2.11 defines the Gas Release Criteria and the potential release quantity is determined by engineering evaluation per the Gas Release Program.

9. Bulk saltcake dissolution and saltcake interstitial liquid removal activities are prohibited.

10. Liquid additions into the waste storage tank are allowed.

11. Direct receipt of oxalic acid is prohibited.

12. Air and steam to the waste tank and annulus transfer jets shall be isolated.

13. Transfers of waste through a transfer line that traverses the annulus are prohibited.

CLOSURE

This Mode is only applicable to Type I, II, and IV waste storage tanks.

1. Storage of waste is limited to an amount having a total effective inhalation dose potential less than or equal to 1.0E+12 rem.

The total effective inhalation dose potential applies only to the primary side of a Closure Waste Tank due to the accident analysis progressions associated with these waste tanks. The Closure Waste Tank annuli do not use a total effective inhalation dose potential limit for their accident progressions (e.g., Annulus Explosion); therefore, this limit does not apply to waste tank annuli.

2. Waste within the tank, including sludge, is permitted to dry out (e.g., creation of a dry sludge tank).

3. The radiolytic hydrogen generation rate shall be less than or equal to 0.5 ft^3/hr evaluated at 25°C with an NO_{eff} equal to zero.

4. Waste Transfers into and out of the tank are prohibited.

5. The following transfer line segments shall be isolated from the waste tank using a single leak-tested valve, double valve isolation, blanks, plugs, cutting and capping, or providing physical separation (air gap) of the line or shall be rendered incapable of a transfer by isolating the motive force (e.g., closed valve for steam/air, open disconnect for electrical power) and ensuring no siphon potential:

   a. Transfer line segments into and out of the waste tank and annulus (excluding the installed annulus to primary transfer line which is addressed by Item 6).

   b. Transfer line segments for which secondary containment overflows/drains to the tank.

6. Air and steam to the waste tank and annulus transfer jets shall be isolated.

7. Liquid additions to the tank shall be limited to those necessary to:

   a. Flush equipment (e.g., pumps, jets, cooling coils),

   b. Maintain tank chemistry,

   c. Rewet dry solids on the floor of the waste tank,

   d. Prevent exposed solids on the floor of the waste tank from drying to the point that they pose special airborne release concerns, and

   e. Achieve waste immobilization for permanent closure (e.g., grouting, flushing of grouting equipment, grout line clearing).

8. Rainwater intrusion is allowed.

9. Operation of waste tank mixing devices is prohibited. Also, pressurization sources (e.g., compressed air) to any pump/mixer column shall be isolated.

10. The bearing water supply to pumps in the tank and cooling water supply and return to the tank (cooling coils and purge exhaust condenser) shall be isolated.

11. Direct receipt of oxalic acid is prohibited. Chemical Cleaning Transfers into the waste storage tank are prohibited.

5.4.4 EVAPORATOR MODES

The CSTF utilizes Evaporators to concentrate waste to provide greater waste storage capacity by evaporating excess water from the waste. The Evaporators have two Modes. The hierarchy of Modes for the Evaporators from the highest to the lowest is Operation and Shutdown.

The Modes for the Evaporators are defined as follows:

OPERATION

1. Steam supplied to the tube bundle and lance is allowed.
2. Waste feed to the evaporator is allowed.
3. Operation of the lift is allowed.
4. Chemical cleaning of the 242-16H Evaporator is allowed.

SHUTDOWN

1. Steam to the tube bundle and lance shall be isolated.
2. Waste feed to the evaporator shall be isolated.
3. Operation of the lift is allowed.
4. Chemical cleaning of the 242-16H Evaporator is prohibited.
5. Evaporator pot liquid temperature shall be less than or equal to 90°C.
6. Mercury inventory in the Mercury Removal Tank (MRT) drain line shall be less than or equal to 750 ml.

5.5 TECHNICAL SAFETY REQUIREMENT DERIVATION

The following sections discuss in detail the bases and derivation of the TSRs applicable to the CSTF. This section is divided into the major facility Process Areas (e.g., pump tanks, transfer lines [including transfer facilities other than pump tanks, and waste tanks]). Included in the major facility Process Areas are discussions of the accidents that make up the major groupings. As discussed previously, the 299-H Waste Management Facility, ARP, and MCU are major Process Areas within the facility but require no LCO derivations. TSR controls are credited for these Process Areas in the form of ACs and/or Design Features as noted in Table 5.9-1.

References to various LCOs (verses section numbers) are made within the following subsections. This is referring to the particular section(s) within this chapter that discusses the specified LCO(s).

5.5.1 PUMP TANK AND TRANSFER FACILITY COMPONENTS TECHNICAL SAFETY REQUIREMENT DERIVATION

The major accidents associated with the pump tanks, PPs, and other transfer facility components (e.g., DBs, VBs, LDBs, Modified Leak Detection Boxes [MLDBs], Leak Probe Sleeves [LPSs], Clean Out Ports [COPs], transfer lines, transfer valves, transfer line jackets/encasements, and evaporator cells) as detailed in Section 3.4, are as follows:

- Evaporator Cell Explosion
- Evaporator Overflow, Leaks, and Spills
- Transfer Facility Fire
- Transfer Line and Transfer Line Jacket/Encasement Explosions
- Transfer Facility Explosions
- Pump Pit and Pump Tank Explosions
- Transfer Error/Submersible Mixer Pump (SMP) Waste Release
- Aerosolization Events
- Waste Tank/Pump Tank Overheating
- Tornado and High Winds Event
- Seismic Event
- Wildland Fire
- Loss of Offsite Power

Refer to Chapter 3 for a detailed description of the events (initiating events, event progressions, etc.) related to pump tanks, PPs, and other transfer facility components. Table 5.9-1 identifies the SSCs and ACs that must function to prevent/mitigate the pump tank/pit and transfer facility events and that were evaluated for TSR coverage.

F-Area Tank Farm transfers are considered to be Low-Rem Waste Transfers (Ref. 11, 12, 13) with the exception of the High Point Flush Pit under certain conditions. The High Point Flush Pit can provide a Transfer Path boundary, protecting F-Tank Farm, during some High-Rem Waste Transfers. Therefore, F-Area Tank Farm equipment (e.g., conductivity probes, ventilation) operability/setpoints associated with High-Rem Waste Transfers are not required to be included in the TSR.

5.5.1.1 Pump Pit Sumps (Limiting Condition for Operation 3.7.1)

Chapter 3 credits PP sump leak detection for mitigating Transfer Error events (pump tank overflow). In addition, PP leak detection is used to protect the initial hydrogen concentration used in the Pump Pit and Pump Tank Explosion scenario (Section 3.4.2.8). Therefore, for each PP, this LCO requires sump conductivity probe and associated control room alarm to be operable with a setpoint less than or equal to the level corresponding to the safety analysis residual volumes provided in Table 3.4-1, adjusted for instrument uncertainty. The leak detection instrumentation is performing its intended function when liquid in the PP can be identified to the control room such that appropriate actions can be taken. Time delay relays (less than or equal to 60 seconds) are permitted on the alarm actuation circuits. The control room alarm for the PP conductivity probes must provide both audible and visual indications of the alarm condition. Satisfactory placement of the credited conductivity probe is a requirement for the establishment of leak detection instrumentation operability. This LCO is applicable during Operation and Standby Modes for the pump tanks and during High-Rem Transfer Mode for transfer lines for which a PP is a credited Leak Detection Location.

Protecting maximum levels within the PP ensures that the initial hydrogen concentration is within the analyzed value. With these levels protected, atmospheric breathing alone ensures that the initial hydrogen concentration is less than or equal to 25% of the Lower Flammability Limit (LFL) (see Section 3.4.1.5.5). These values are the equilibrium values that are eventually reached based on the generation rate associated with Bounding Sludge Slurry filled to 1.29 volume percent (vol. %) of the individual PP.

In the event the waste level in a PP sump is greater than the level corresponding to the safety analysis residual volume provided in Table 3.4-1 or the required conductivity probe is inoperable, the actions listed below shall be taken:

1. Immediately stop Waste Transfers associated with the affected PP. This action minimizes the potential vapor space reduction associated with the affected PP as well as minimizes the material at risk. For an inoperable conductivity probe, immediately terminating transfers minimizes the potential of a leak/overflow occurring with inoperable leak detection equipment. Transfers associated with performing Action 2 are permitted because they are considered to be short in duration and are necessary to place the PP in a safer condition.

2. Ensure that the waste level in the affected PP is less than or equal to the level corresponding to the safety analysis residual volume provided in Table 3.4-1 (adjusted for uncertainty). For the PPs, the safety analysis demonstrates that the pit does not become flammable within 10 days, assuming that the maximum missing

waste volume (15,000 gallons) was present in addition to the residual volume. Therefore, an immediate completion time is not required.

If Action 2 cannot be completed, then either periodic hydrogen monitoring must be performed or periodic purging of the affected PP is required to maintain the PP well less than the LFL. Since the waste level in the PP is greater than the allowable value to ensure 25% of the LFL is maintained, in between the periodic hydrogen monitoring or purging, the PP vapor space may exceed 25% of the LFL. However, the periodicity of the hydrogen monitoring/purging is sufficient, since Waste Transfers associated with the PP have been terminated, to ensure the PP vapor space does not reach flammable conditions.

5.5.1.1.1 INSTRUMENT LOOP TEST OF THE PUMP PIT SUMP CONDUCTIVITY PROBE (SURVEILLANCE REQUIREMENT 4.7.1.1)

Performance of an instrument loop test on each required conductivity probe ensures that the instruments are capable of detecting a high level condition and annunciating in the applicable control room. The instrument loop test verifies the operability of the entire instrument loop (e.g., conductivity probe and associated circuitry and control room alarms) with the exception of a limited portion of the common return path encompassing the grounding scheme. This SR shall be performed on a routine basis to ensure that the conductivity probes are maintained in an operable state. This SR also ensures requirements for fiber optic cable analysis (Ref. 80) are met and the surveillance frequency shall be within the loop failure probability analysis (Ref. 51, 81) for alarm loops that utilize fiber optic cable.

5.5.1.1.2 VERIFICATION OF SUMP CONDUCTIVITY PROBE HEIGHT (SURVEILLANCE REQUIREMENT 4.7.1.2)

The PP sump conductivity probe setpoint ensures that operators take action to mitigate the release within the assumptions of the analysis. Therefore, conductivity probes are verified to be set at, or below, the maximum calculated level setpoints (including uncertainty).

5.5.1.2 <u>Diversion Box Sump Level (Limiting Condition for Operation 3.7.2)</u>

Chapter 3 credits DB fill levels for protecting the initial hydrogen concentration used in the Transfer Facility Explosion scenario (Section 3.4.2.7). Therefore, this LCO requires that DB fill level be less than or equal to the level corresponding to the safety analysis residual volumes provided in Table 3.4-1, adjusted for instrument uncertainty. Because this LCO is protecting an initial condition assumption in Chapter 3 (i.e., initial hydrogen concentration), no equipment operability is specified within this LCO.

This LCO is required for DBs when they are a credited Leak Detection Location as defined by the Transfer Path. This LCO is also required for any DBs through which there has been a transfer. FDB-4 is equipped with an opening in the sump that allows any leaked waste to directly drain into FPP-2, thus waste level monitoring in FDB-4 is not required. This LCO is applicable in any of the defined transfer line Modes as discussed in Section 5.4.2.

Protecting maximum levels within the DBs ensures that the initial hydrogen concentration is within the analyzed value. With these levels protected, atmospheric breathing alone ensures that the initial hydrogen concentration is less than or equal to 25% of the LFL (see Section 3.4.1.5.5). These values are the equilibrium values that are eventually reached based on the generation rate associated with Bounding Sludge Slurry filled to 1.29 vol. % of the individual DB (for HDB-7 the value is based on the generation rate associated with Extended Sludge Processing [ESP] Sludge Slurry filled to 0.39 vol. %).

In the event the waste level in a DB is greater than the safety analysis value, the actions listed below shall be taken:

1. Immediately stop High-Rem Waste Transfers and ESP Sludge Slurry transfers associated with the affected DB. High-Rem Waste Transfers contain the highest inhalation dose potential (larger risk) and thus, warrant the immediate action. ESP Sludge Slurry transfers contain the highest hydrogen generation rate and thus, warrant the immediate action. For other Waste Transfers (e.g., Low-Rem Waste Transfers), an immediate action to terminate the transfer is not required due to the reduced inhalation dose potential. However, the completion time to terminate these Waste Transfers shall be sufficiently limiting to minimize the potential of significant quantities of material from accumulating in the DB. These actions minimize the vapor space reduction associated with the affected DB, as well as minimizing the material at risk and source of hydrogen. Transfers associated with performing Action 2 are permitted because they are considered to be short in duration and are necessary to place the DB in a safer condition.

2. Ensure that the waste level in the affected DB is less than or equal to the level corresponding to the safety analysis residual volumes provided in Table 3.4-1 (adjusted for uncertainty). This action shall be taken in a timely manner to minimize the amount of hydrogen allowed to accumulate in the DB (i.e., removal of hydrogen generating material).

If Action 2 cannot be completed, then either periodic hydrogen monitoring must be performed or periodic purging of the affected DB is required to maintain the DB well less than the LFL. Since the waste level in the DB is greater than the allowable value to ensure 25% of the LFL is maintained, in between the periodic hydrogen monitoring or purging, the DB vapor space may exceed 25% of the LFL. However, the periodicity of the hydrogen monitoring/purging is sufficient, since Waste Transfers associated with the DB have been terminated, to ensure the DB vapor space does not reach flammable conditions.

5.5.1.2.1 VERIFICATION OF TRANSFER SYSTEM LEAK DETECTION LOCATION LEVEL (SURVEILLANCE REQUIREMENT 4.7.2.1)

Chapter 3 credits DBs to have a maximum safety analysis residual volume (provided in Table 3.4-1). Since LCO 3.7.2 requires a maximum level for the DBs, verification on a routine basis is required.

5.5.1.3 Diversion Box Leak Detection Instruments (Limiting Condition for Operation 3.7.3)

Chapter 3 Transfer Error scenarios credit conductivity probes and their associated control room alarms for DBs given in Table 3.4-1 with a volume less than 15,000 gallons. The amount of waste in DBs is limited to 1.29% of the available volume of the structure (0.39 vol. % for HDB-7). This is based on maintaining the hydrogen concentration in those locations less than or equal to 25% of the LFL, assuming that the waste present in the location has the maximum hydrogen generation rate used in the accident analysis, and considering the effects of atmospheric breathing. Although HDB-8 has a volume greater than 15,000 gallons, it is the credited Leak Detection Location for the LDBs associated with the HDB-8 Complex. These LDBs drain to HDB-8 and HPP-7 (addressed in LCO 3.7.1).

The Transfer Facility Explosion event (Section 3.4.2.7) credits the conductivity probes and control room alarms for active DBs given in Table 3.4-1 that can become flammable within 10 days (DBs excluding HDB-8). During an ESP Sludge Slurry transfer from Tank 51 to Tank 40, HDB-7 can become flammable within 10 days; therefore, Chapter 3 credits the conductivity probes and associated alarms for HDB-7 as a level of control. Although HDB-8 does not become flammable within 10 days, Chapter 3 credits the conductivity probes and control room alarms for HDB-8.

Therefore, this LCO requires the leak detection instrumentation (conductivity probe and control room alarm) to be operable with the appropriate setpoint value for the DBs that meet either the Transfer Error criteria or Transfer Facility Explosion criteria discussed above. This LCO requires conductivity probes and associated control room alarms for each DB to be operable with a setpoint less than or equal to the level corresponding to the safety analysis residual volumes provided in Table 3.4-1, adjusted for instrument uncertainty. The leak detection instrumentation is performing its intended function when liquid in the Leak Detection Location can be identified to the control room such that appropriate actions can be taken. Time delay relays (less than or equal to 60 seconds) are permitted on the alarm actuation circuits. The control room alarm for the conductivity probes must provide both audible and visual indications of the alarm condition. Satisfactory placement of the credited conductivity probe is a requirement for the establishment of leak detection instrumentation operability.

From Chapter 3, this LCO is applicable for transfer lines during High-Rem Transfer Mode for the DBs described above, when they are a credited Leak Detection Location as defined by the Transfer Path. This LCO is also applicable during Operation Mode when ESP Sludge Slurry transfers are associated with HDB-7.

In the event that the leak detection instrumentation is inoperable, the actions listed below shall be taken:

1. Immediately stop High-Rem Waste Transfers and ESP Sludge Slurry transfers associated with the affected DB. Immediately terminating transfers minimizes the potential of a leak/overflow occurring with inoperable leak detection equipment. Transfers associated with performing Action 2 are permitted because they are considered to be short in duration and are necessary to place the DB in a safer condition.

2. Ensure that the waste level in the affected DB is less than or equal to the level corresponding to the safety analysis residual volumes provided in Table 3.4-1 (adjusted for uncertainty). This action shall be taken in a timely manner to reduce the level to below the analyzed value prior to reaching LFL conditions.

5.5.1.3.1 INSTRUMENT LOOP TEST OF THE CONDUCTIVITY PROBE (SURVEILLANCE REQUIREMENT 4.7.3.1)

Performance of an instrument loop test on each required conductivity probe ensures that the instruments are capable of detecting a high level condition and annunciating it in the applicable control room. The instrument loop test verifies the operability of the entire instrument loop (e.g., conductivity probe and associated circuitry and control room alarms) with the exception of a limited portion of the common return path encompassing the grounding scheme. This SR shall be performed on a routine basis to ensure that the conductivity probes are maintained in an operable state. This SR also ensures requirements for fiber optic cable analysis (Ref. 80) are met and the surveillance frequency shall be within the loop failure probability analysis (Ref. 51, 81) for alarm loops that utilize fiber optic cable.

5.5.1.3.2 VERIFICATION OF SUMP CONDUCTIVITY PROBE HEIGHT (SURVEILLANCE REQUIREMENT 4.7.3.2)

The DB conductivity probe setpoint ensures that operators take action to mitigate the release within the assumptions of the analysis. Therefore, conductivity probes are verified to be set at, or below, the maximum calculated level setpoints (including uncertainty).

5.5.1.4 Valve Box, Drain Valve Box, and High Point Flush Pit Leak Detection Instruments (Limiting Condition for Operation 3.7.4)

Chapter 3 credits leak detection in the VBs, drain VBs, and the High Point Flush Pit and their associated control room alarms for mitigating Transfer Error events and Transfer Facility Explosion events. The amount of waste in VBs, drain VBs, and the HPFP is limited to 1.29% or 0.39% of the available volume of the structure (dependent upon hydrogen generation rate for the location in the analysis). This is based on maintaining the hydrogen concentration in those locations within the safety analysis, assuming that the waste present in the location has the maximum hydrogen generation rate used in the accident analysis, and considering the effects of atmospheric breathing. For some locations, it is not practical to detect waste volumes as small as 1.29% or 0.39% of the structure volume. In these locations, the amount of waste is limited to a 1 inch level covering the floor of the structure.

Therefore, this LCO requires the leak detection instrumentation (conductivity probe and control room alarm) to be operable with a setpoint less than or equal to the level corresponding to the safety analysis residual volumes provided in Table 3.4-1, adjusted for instrument uncertainty. The leak detection instrumentation is performing its intended function when liquid in the Leak Detection Location can be identified to the control room such that appropriate actions can be taken. Time delay relays (less than or equal to 60 seconds) are permitted on the alarm actuation circuits. The control room alarm for the conductivity probes must provide both audible and visual indications of the alarm condition. Satisfactory placement of the credited conductivity

probe is a requirement for the establishment of leak detection instrumentation operability. The Transfer Facility Explosion (Section 3.4.2.7) and Transfer Error/SMP Waste Release (Section 3.4.2.9) events credit the conductivity probes and control room alarms for the subject Leak Detection Locations given in Table 3.4-1, except for the Tank 50 VB and Low Point Drain Tank (LPDT) Cell. Both the Transfer Error event and the Transfer Facility Explosion events shall be considered when determining the applicable VBs and drain VBs.

Although F-Area Tank Farm transfers are considered Low-Rem Waste Transfers and High-Rem Waste Transfers are prohibited from being transferred to F-Area Tank Farm (Section 5.5.4.2.43), the High Point Flush Pit can be on the Transfer Path of some H-Area Tank Farm High-Rem Waste Transfers (i.e., the credited isolation point of the Transfer Path is within the High Point Flush Pit). Therefore, the High Point Flush Pit shall be included in this LCO.

From Chapter 3, this LCO is applicable for transfer lines during High-Rem Transfer Mode for the Leak Detection Locations discussed previously when on the Transfer Path (i.e., are a credited Leak Detection Location).

Protecting maximum levels within the subject Leak Detection Locations ensures that the initial hydrogen concentration is within the analyzed value. With these levels protected, atmospheric breathing alone ensures that the initial hydrogen concentration is less than or equal to 25% of the LFL in all but a few locations (see Section 3.4.1.5.5). These values are the equilibrium values that are eventually reached assuming that the waste present in the location has the maximum hydrogen generation rate used in the accident analysis.

In the event the required conductivity probe is inoperable, the actions listed below shall be taken:

1. Immediately stop Waste Transfers associated with the affected Leak Detection Location. Immediately terminating transfers minimizes the potential of a leak/overflow occurring with inoperable leak detection equipment. Transfers associated with performing Action 2 are permitted because they are considered to be short in duration and are necessary to place the Leak Detection Location in a safer condition.

2. Ensure that the waste level in the affected Leak Detection Location is less than or equal to the level corresponding to the safety analysis residual volumes provided in Table 3.4-1 (adjusted for uncertainty). This action shall be taken in a timely manner to minimize the amount of hydrogen allowed to accumulate in the Leak Detection Location (i.e., removal of hydrogen generating material).

5.5.1.4.1 INSTRUMENT LOOP TEST OF THE CONDUCTIVITY PROBE (SURVEILLANCE REQUIREMENT 4.7.4.1)

Performance of an instrument loop test on each required conductivity probe ensures that the instruments are capable of a detecting a high level condition and annunciating in the applicable control room. The instrument loop test verifies the operability of the entire instrument loop (e.g., conductivity probe and associated circuitry and control room alarms) with the exception of a limited portion of the common return path encompassing the grounding scheme. This SR shall

be performed on a routine basis to ensure that the conductivity probes are maintained in an operable state. This SR also ensures requirements for fiber optic cable analysis (Ref. 80) are met and the surveillance frequency shall be within the loop failure probability analysis (Ref. 51, 81) for alarm loops that utilize fiber optic cable.

5.5.1.4.2 VERIFICATION OF SUMP CONDUCTIVITY PROBE HEIGHT (SURVEILLANCE REQUIREMENT 4.7.4.2)

The Leak Detection Location conductivity probe setpoint ensures that operators take action to mitigate the release within the assumptions of the analysis. Therefore, conductivity probes are verified to be set at or below the maximum calculated level setpoints (including uncertainty).

5.5.1.5 Transfer Facility Ventilation (Excluding H-Area Diversion Box-8 Complex and H-Area Diversion Box-7) (Limiting Condition for Operation 3.7.5)

Chapter 3 credits pump tank and DB ventilation to prevent Pump Tank Explosion and Transfer Facility Explosion events and to mitigate the Aerosolization Events. Chapter 3 also credits pump tank/pit ventilation to mitigate Transfer Error (pump tank overflow) and Pump Tank Overheating events. The pump tank/pit ventilation system also provides an active elevated release path (via the exhaust stack) to ensure adequate dispersion of potential chemical vapors from the PP/pump tank vapor space during Chemical Cleaning Transfers (or vent/drain operations associated with the transfer). This LCO applies to all transfer facilities for which forced ventilation was credited in the safety analysis, except for the HDB-8 Complex and HDB-7. See LCO 3.7.6 and LCO 3.7.7 for ventilation requirements for the HDB-8 Complex and HDB-7, respectively.

This LCO requires that the Pump Pit/Tank Ventilation System be operable (excluding the HDB-8 Complex and HDB-7). To be operable, the ventilation system requires an operating fan generating the required purge flow through the system, an intact flow path (e.g., ductwork, filter housing, reheater shell) from the transfer facility to the fan (or to the exhaust stack discharge, if associated with a Chemical Cleaning Transfer or related vent/drain operation), and an online exhaust High-Efficiency Particulate Air (HEPA) filter capable of removing radioactive particulate from the exhaust stream. Also for the ventilation system to be operable, the cell covers for the transfer facility (DB and PPs) must be installed, as the transfer facility structure provides a confinement function to direct flow to the ventilation system filtered exhaust. Additionally for F-Area Pump Pit (FPP) FPP-1 (via FDB-2), HPP-2, HPP-3, HPP-4, HPP-5, and HPP-6 (via HPP-5) ventilation systems to be operable, an inlet flow path to the transfer facility is required (i.e., permits air introduction). This LCO also requires that exhaust flow indication be operable for each of the credited systems. This LCO is applicable during Operation and Standby Modes for the pump tanks, during High-Rem Transfer Mode for transfer lines for DBs with active ventilation when it is a credited Leak Detection Location, and during High-Rem Transfer and Operation Modes for the transfer line from the HDB-6 sump jet while steam/air is supplied to the sump transfer jet. The ventilation requirements, when jetting the sump contents during other periods (e.g., Low-Rem Waste Transfers), will be administratively controlled under the Transfer Control Program.

Requiring continuous purge flow through the pump tank/pit ensures that the concentration of flammable vapors are less than or equal to 25% of the LFL. From Reference 94, the required

purge flow to maintain flammable vapors in the pump tanks to less than or equal to 25% of the LFL is 17 standard cubic feet per minute (scfm) (assuming 5% hydrogen margin for trace organics). This flow rate requirement is based on a 100°C supernate steam jet transfer at overflow. From a hydrogen release perspective, the supernate transfer is the worst case analyzed scenario because of the release associated with dissolved hydrogen. Any residual amount of material in the PP sump is assumed to contribute negligibly to the required purge flow. The 17-scfm-flow rate is needed per pump tank. Some pump tanks are associated with a "complex" in that they are purged with a common ventilation system (i.e., the flow for each pump tank is read at the same location). To account for this, the required flow rate for each pump tank (17 scfm) will be multiplied by the number of tanks within the complex and then doubled to add margin of safety (see LCO 3.7.6 for a specific example for the HDB-8 Complex). The LCO value will be based on this derived value and adjusted for instrument uncertainty.

The flow requirements shall be adjusted for the canyon receipt pump tanks when receiving Process Vessel Ventilation (PVV) flushes. These receipts may contain a higher organic concentration (i.e., up to 20% contribution to LFL, as discussed in Chapter 3) than analyzed for non-PVV flush receipts. To account for this receipt, the 17 scfm flow requirement, discussed above, shall be increased by a factor of 4 to drive the hydrogen concentration down to less than 5% LFL. This flow rate (68 scfm) shall be multiplied by the number of pump tanks associated with a common ventilation system (if applicable). The margin needed for flow balancing is less for the canyon receipt pump tanks (two pump tanks on common ventilation system versus up to four for non-PVV flushes). Since the PVV flushes are received in one of two canyon receipt pump tanks (i.e., only one of the canyon receipt pump tanks requires the additional flow), multiplying by the number of pump tanks will provide a margin to account for any flow balancing uncertainty. This value is the required safety value that must be adjusted for instrument uncertainty.

To transition the flow requirement back to the non-PVV flow requirement (i.e., 17 scfm), sufficient pump tank flushes shall be performed to reduce the organic contribution to LFL to less than or equal to 5% (at 100°C). The number of flushes required shall be determined, on a case by case basis, by an engineering evaluation of the organic concentrations required to meet the 5% limit. This engineering evaluation shall be performed using the methodology outlined in Reference 38. Requiring continuous purge flow through the DBs during High-Rem Waste Transfers ensures that the concentration of flammable vapors remains below LFL conditions (less than or equal to 25% of the LFL) during and after a release. The required purge flow to maintain flammable vapors in the DBs to less than or equal to 25% of the LFL is 31 standard cubic feet per hour (scfh) (Ref. 14). This is the bounding flow rate requirement for the credited DB ventilation systems and is based on the needs of HDB-2. The flow rate is based on the radiolytic hydrogen generation rate associated with a spill of Bounding Sludge Slurry at 90°C in addition to atmospheric breathing. The LCO value will be based on the value derived in the safety analysis (31 scfh) and adjusted for instrument uncertainty.

In order for the transfer facility ventilation system to be operable, this LCO also requires an online exhaust HEPA filter capable of removing radioactive particulate from the exhaust stream. If an exhaust HEPA filter is inoperable and an operable HEPA filter is installed in the system and can be placed on line, immediate action shall be taken to place an operable exhaust HEPA

filter in service and remove the inoperable HEPA filter from service. This action allows shifting to an operable standby filter, when available in the system, and is not applicable to ventilation systems with only one installed HEPA filter.

In the event that the transfer facility ventilation system is inoperable (including associated flow instrument) or the exhaust flow is less than the required flow, the actions listed below shall be taken to ensure that the flammable vapor concentration remains less than 100% of the LFL and that the possibility of an aerosolization/airborne release event without ventilation flow is minimized.

1. Immediately stop liquid additions into the affected pump tank. Stopping liquid additions ensures that the vapor space remains within analyzed values. If steam jetting supernate in the pump tank, stopping the liquid additions limits the amount of dissolved hydrogen that can be released into the vapor space. Liquid additions necessary to restore ventilation are permitted since they are attempting to place the facility in a safer condition and are expected to be limited in volume as well as short in duration.

2. Immediately stop Waste Transfers associated with the affected DB/PP. Stopping transfers minimizes the potential of a leak occurring above residual values within the affected DB/PP while ventilation is inoperable or flow is less than the minimum required by the safety analysis.

3. Immediately stop agitators and other activities causing mixing in the affected pump tank (excluding air to the dip tubes and normal blowdowns, which are not considered to cause significant mixing). Stopping agitation/mixing reduces the hydrogen release rate in the affected pump tank. An immediate action is warranted since agitation directly impacts the release rate of the hydrogen.

4. Immediately isolate steam/air jets in the affected pump tank and PP/DB sump (jetting with water does not pose an aerosolization or pump tank overheating event concern). Immediately isolating the jets minimizes the potential for an aerosolization event in the pump tank/PP/DB from occurring without operable ventilation. In the case of a steam jetted transfer from a pump tank, isolating the steam jet minimizes the potential of an airborne release due to potential steam heating of the pump tank. A normal air blow (nominal range of 5 to 30 minutes) shall be permitted following jet operation. This post-operation air blow is intended to prevent suckbacks and/or siphons by purging the steam from the jet supply piping and does not have a significant impact on the analyzed aerosolization or pump tank overheating accident progressions. The control that prevents an aerosolization event (piping integrity) is not impacted by the normal air blow. In addition, the secondary confinement and installed HEPA filter will provide some mitigation in the event piping integrity was degraded.

5. Ensure forced ventilation is operating on the affected pump tank or DB unless it can be demonstrated (on a frequent basis) that the hydrogen concentration is less than or equal to 25% of the LFL until such time that ventilation is restored. In the case of low exhaust flow during a non-Canyon steam jetted transfer from a source of greater

than 1,200 gallons, the affected pump tank shall be verified to have the required ventilation flow. Because Waste Transfers (and other hydrogen release activities) have been stopped, temporary transients in excess of 25% of the LFL are acceptable provided that the hydrogen concentration is demonstrated to be below 25% of the LFL within the designated periodicity of the TSR.

When receiving PVV flushes, this Required Action (i.e., monitoring hydrogen concentration) ensures that the pump tank does not become flammable. By controlling the hydrogen concentration to less than 25% of the LFL, the total flammable gas concentration (hydrogen + organics) is less than 45% LFL (25% Hydrogen + 20% organics).

Additionally, if the ventilation system is inoperable and associated with a Chemical Cleaning Transfer or related vent/drain operation, Industrial Hygiene monitoring and protective actions (as required) shall be initiated immediately. This action ensures worker exposure to mercury is within safe levels when the ventilation system is in a degraded condition.

For ventilation systems that contain two 100% capacity HEPA banks, completion of Action 2 is not required if the ventilation system is inoperable due solely to SR testing required to declare a HEPA filter operable. This provision allows HEPA testing to establish the in-place performance test efficiency required by SR 4.7.5.3. While performing HEPA testing of a new filter, it is acceptable to allow transfers to continue out of the affected tank. In practical terms, an installed HEPA of unknown efficiency provides some measure of protection. The brief period the HEPA filter bank may be declared inoperable during testing does not appreciably elevate the risk of a release event. However, in the unlikely instance where the efficiency test fails, the operable HEPA filter bank (if available) shall be placed back in service or the Action shall be invoked.

Forced ventilation shall be provided to the affected pump tank within 21 days (minimum time to LFL for a pump tank is greater than 30 days) unless vapor space monitoring is initiated (also within 21 days) and continued on a frequent basis until tank ventilation is restored. The monitoring shall ensure that the vapor space hydrogen concentration remains less than or equal to the safety analysis value (25%). The minimum time to LFL documented in Reference 94 for Bounding Sludge Slurry (maximum radiolytic release rate) takes into account the passive vents on the pump tanks including the effects of steam jetted transfers from a source less than or equal to 1,200 gallons. The passive vents on the pump tanks act as a coupled air exchange for the buoyant vapor (hydrogen) from the waste in the pump tank to the PP. The time provided by the passive vents depends on a number of parameters that were conservatively evaluated (e.g., hydrogen generation/release rate, initial cell concentration, and temperature gradient between the tank and pit) to determine the minimum time to LFL. The time to LFL for pumped Bounding Supernate is bounded by the times to LFL for Bounding Sludge Slurry (i.e., pump does not generate sufficient heat to release significant amounts of dissolved hydrogen). The effects of steam jetted transfers from H-Canyon waste headers are bounded by steam jetted transfers from a source less than or equal to 1,200 gallons, as the hydrogen is released through the H-Canyon vent header and does not release significant amounts of dissolved hydrogen following the transfer (Ref. 96).

For non-Canyon steam jetted transfers from a source of greater than 1,200 gallons, the completion time for restoring ventilation (or ensuring the hydrogen concentration is less than or equal to 25% of the LFL) depends on the time to LFL. The time to LFL is calculated as a function of pump tank level for Bounding Supernate (steam jet transfer releasing dissolved hydrogen) and is documented in Reference 94. Since the recovery times are based on conservative calculations, and operating procedures assure verification of tank quantities during transfers, the tank levels used as a basis for the recovery times do not include the instrument uncertainty of the tank level indicators based on the logic provided in Reference 15.

The completion time for restoring DB ventilation shall consider the fact that DBs do not normally store waste (versus pump tanks). Additional consideration should be given to LCOs 3.7.2 and 3.7.3 when determining the completion time. These LCOs monitor DB sump levels to protect residual values and take appropriate actions to ensure that these values are not significantly exceeded (i.e., much less than a 15,000-gallon spill).

As part of restoring the required ventilation flow, continuous ventilation flow shall be supplied to the pump tank/DB for a sufficient duration to perform 12 vapor space turnovers (unless the pump tank/DB vapor space hydrogen concentration is determined to be less than or equal to 25% of the LFL, accounting for organics and uncertainty). This action shall be completed prior to exiting the LCO Condition (ventilation inoperable or flow less than the minimum required). From Reference 17, 12 vapor space turnovers ensures that the flammable vapor concentration is "reset" to the conditions used in the safety analysis (i.e., flammable vapor concentration is less than or equal to 25% of the LFL). This will ensure that the calculated times to LFL are valid. Nominal ventilation flow values (i.e., flows not corrected for instrument uncertainty) may be used when determining the ventilation run time necessary to provide the 12 vapor space turnovers. To ensure the flammable vapor concentration is adequately "reset" within the affected location, consideration shall be given to those locations with shared vapor spaces (e.g., pump tanks with PPs). The use of nominal values for this application is justified considering it only takes approximately seven vapor space turnovers (assuming a mixing efficiency of 0.2) to reduce hydrogen concentration from 100% to 25% of the LFL (Ref. 17). The mixing efficiency of 0.2 is based on the recommended value from NFPA 69 (Ref. 97) Annex D for the ventilation system arrangement (single exhaust opening, non-positive supply ventilation system).

A higher flow rate allowance is permitted for a limited period to compensate for reduced performance of the transfer facility ventilation system integrity. The additional flow rate of the forced ventilation system must meet the minimum flow requirements stated above with an additional allowance for potential breaches within the length of the ductwork. The additional allowance is dependent on the specific ventilation system fan parameters (e.g., static pressure). Potential breaches for reduced ventilation system integrity apply to transfer facility ventilation system components and ductwork originating from the transfer facility to the exhaust fan to include the reheater, HEPA filter housing, and exhaust fan housing. A cumulative breach in the system may not exceed a hole size of 0.55 square inches (Ref. 68). This hole size has been determined based on the area of two test plug ports (equivalent to two test plug hole diameters of 19/32 inches each). During periods of reduced system performance, appropriate system parameters are frequently monitored. Reduced performance conditions (e.g., "non-system

holes") are identified by routine ventilation system inspections (e.g., operators monitoring system performance, system maintenance, and structural integrity inspections).

Cell covers may need to be removed during maintenance activities associated with the transfer facility. Although the remainder of the ventilation system remains operable, the confinement function of the ventilation system to direct flow to the ventilation system filtered exhaust has been degraded. Functions associated with protecting flammable vapor concentration are not affected by this ventilation system degraded condition. In the event the transfer facility ventilation system is inoperable due solely to removing one or more cell covers, the following actions shall be taken:

1. Immediately stop Waste Transfers associated with the affected DB/PP. Stopping transfers minimizes the potential of a leak or overflow occurring in the affected location.

2. Immediately stop agitators and other activities causing mixing in the affected pump tank (excluding air to the dip tubes and normal blowdowns, which are not considered to cause significant mixing). Stopping agitation/mixing minimizes the potential for an aerosolization event in the pump tank/PP from occurring. This action also stops mixing of sludge solids in the bottom of the pump tank, thus minimizing sludge constituents in the waste that are available for release from a pump tank overflow.

3. Immediately isolate steam/air jets in the affected pump tank and PP/DB sump (jetting with water does not pose an aerosolization or pump tank overheating event concern). Immediately isolating the jets minimizes the potential for an aerosolization event in the pump tank/PP/DB from occurring. In the case of a steam jetted transfer from a pump tank, isolating the steam jet minimizes the potential of an airborne release due to potential steam heating of the pump tank. A normal air blow (nominal range of 5 to 30 minutes) shall be permitted following jet operation. This post-operation air blow is intended to prevent suckbacks and/or siphons by purging the steam from the jet supply piping and does not have a significant impact on the analyzed aerosolization or pump tank overheating accident progressions. The control that prevents an aerosolization event (piping integrity) is not impacted by the normal air blow. This action may be completed by realignment of the gang valve, or by closing other valves upstream or downstream of the gang valve.

4. Immediately stop liquid additions into the affected pump tank, except for small liquid additions needed for maintenance activities as discussed below. Limiting liquid additions minimizes the amount of liquid that could be added to the pump tank, thus minimizing the potential of a pump tank overflow.

During removal, installation, maintenance, and repair of equipment from PPs/pump tanks (e.g., pumps, jumpers, agitators, dip tubes), small volume flushes of the equipment into the pump tank are permitted in order to reduce radiation rates and contamination levels in the cell associated with the maintenance activity (i.e., minimize worker exposure). The liquid additions allowed by this action are manned evolutions (with the presence of radiological control personnel) and are typically of small volumes (e.g., less than 500 gallons). In the unlikely event

that small flushes cause minor pump tank overflow to the respective PP, any significant risk would be limited to the facility worker as the material at risk (both quantity and radiologically) would be significantly less that that assumed in the bounding design basis accident scenario (15,000 gallons of Bounding Sludge Slurry). The material released would tend to have contaminated flush water characteristics (especially since the density of flush water is less than that of supernate or sludge). To that end, facility workers would be able to self-protect as necessary if directed by radiological control personnel. Therefore, it is judged that the risk to the facility worker would be less by permitting the small additions to the pump tank (primary containment) than if the equipment were suspended over the cell sump, and then flushed.

5.5.1.5.1 VERIFICATION OF TRANSFER FACILITY EXHAUST FLOW (SURVEILLANCE REQUIREMENT 4.7.5.1)

The transfer facility ventilation system ensures that the flammable vapor concentration in the pump tanks/DBs remains within the analyzed values. Since LCO 3.7.5 requires a minimum ventilation flow rate for the pump tanks and DBs, verification on a routine basis is required. Note that the surveillance frequency shall be more frequent during steam jet transfers because of the release rate associated with dissolved hydrogen (i.e., time to LFL is on the order of minutes following loss of ventilation due to dissolved hydrogen). From Reference 18, the increased surveillance frequency for steam jet transfers does not apply to canyon receipts (no dissolved hydrogen). This verification also ensures that the exhaust fan is operable and performing its intended safety function as well as ensuring proper damper alignment (i.e., dampers have not changed position).

5.5.1.5.2 INSTRUMENT LOOP CALIBRATION ON TRANSFER FACILITY EXHAUST FLOW INDICATION (SURVEILLANCE REQUIREMENT 4.7.5.2)

The local exhaust flow indication provides the SS monitoring of the transfer facility purge flow conditions and is relied upon to ensure the minimum flow requirements are maintained. These SRs ensure calibration of the flow instruments and that the instruments read within the uncertainty utilized in the calculation of the setpoints. The surveillance frequency shall be within the loop uncertainty analysis and considered adequate to ensure that the flow instrumentation can perform its intended safety function.

5.5.1.5.3 HIGH-EFFICIENCY PARTICULATE AIR FILTER PERFORMANCE TEST (SURVEILLANCE REQUIREMENT 4.7.5.3)

A minimum HEPA filter efficiency of 99.5% bounds the various values used in the analyses (see Section 3.4.1.5.2). Therefore, initial and periodic HEPA filter performance testing (e.g., Polyalphaolefin [PAO] test or equivalent) shall be performed to ensure an efficiency of 99.5% or better. The surveillance frequency shall be based on the guidance provided in References 19 and 20.

The ventilation system shall be operating at a normal flow rate for the system during the performance test of the HEPA filter. This ensures that the test is performed under the same conditions as the system is expected to operate. Verification of normal flow can be based on having the exhaust fan operating with the system aligned to ventilate the transfer facility, and

indication of normal system flow (e.g., installed equipment such as flow indicator, component differential pressures, as applicable, reading within normal limits). This is consistent with the Nuclear Air Cleaning Handbook (Ref. 62), which states that the in-place test is performed at operational airflow.

Transfer facility ventilation systems typically operate near the nominal system flow rate. Variations in ventilation system flow rate will occur normally over time. These variations can occur due to filter loading, changes in ventilation system conditions (such as demister fouling), and position of dampers. Typically, such variations are small relative to the nominal system flow.

HEPA filters capture particles by three basic mechanisms, inertial impaction, Brownian motion, and interception. Two of these mechanisms, inertial impaction and Brownian motion, are affected by flow rate. The efficiency for inertial impaction increases as flow rate increases, while the efficiency due to Brownian motion increases as flow rate decreases. The net effect of these two mechanisms is to maintain overall efficiency relatively constant over a wide range of flows. Therefore, normal variations in flow do not affect the results of the in-place performance test (Ref. 62).

5.5.1.6 H-Area Diversion Box-8 Complex Process Vessel Ventilation System (Limiting Condition for Operation 3.7.6)

Chapter 3 credits pump tank ventilation to prevent the Pump Tank Explosion events and to mitigate PP/HDB-8 Aerosolization Events. Chapter 3 also credits pump tank/pit ventilation to mitigate Transfer Error (pump tank overflow) and Pump Tank Overheating events. This LCO applies to the transfer facilities in the HDB-8 Complex for which forced ventilation was credited in the safety analysis. The ventilation requirements for non-HDB-8 locations are provided in other LCOs (see LCOs 3.7.5 and 3.7.7).

This LCO requires that the HDB-8 Complex PVV System be operable. To be operable, the ventilation system requires one operating fan generating the required purge flow through the system, a second (standby) fan capable of generating the required purge flow through the system while operating, an intact flow path (e.g., ductwork, filter housing, reheater and condenser shells) from the pump tanks to the fans, and an online exhaust HEPA filter capable of removing radioactive particulate from the exhaust stream. Also for the ventilation system to be operable, the cell covers for the transfer facility (DB and PPs) must be installed, as the transfer facility structure provides a confinement function to direct flow to the ventilation system filtered exhaust. This LCO also requires that the following components be operable: two PVV System Fans and associated low exhaust flow interlock (common to all pump tanks), and PVV exhaust flow instrumentation including control room alarm (common to all pump tanks). The low exhaust flow interlock detects low flow through the system and automatically starts the standby exhaust fan. The interlock shall also cause the inlet damper on the standby fan to open and the inlet damper on the other fan to close (thus preventing reverse flow through the non-operating fan). Time delay relays (less than or equal to 45 seconds) are permitted on the low exhaust flow interlock actuation circuits. The control room alarm for the PVV exhaust flow must provide both audible and visual indications of the alarm condition. This LCO is applicable during Operation

and Standby Modes for the pump tanks, and during High-Rem Transfer and Operation Modes for the transfer line from the HDB-8 sump jet while steam/air is supplied to the sump transfer jet.

Requiring continuous purge flow through the pump tank/pit ensures that the concentration of flammable vapors are below LFL conditions (less than or equal to 25% of the LFL). From Reference 94, the required purge flow to maintain flammable vapors in the pump tanks to less than or equal to 25% of the LFL is 17 scfm. This flow rate requirement is based on a 100°C supernate steam jet transfer at overflow. From a hydrogen release perspective, the supernate transfer is the worst-case analyzed scenario because of the release associated with dissolved hydrogen. Any residual amount of material in the PP sump is assumed to contribute negligibly to the required purge flow. The 17-scfm-flow rate is needed per pump tank. The HDB-8 Complex consists of four pump tanks with common ventilation (i.e., the flow for each pump tank is read at the same location). To account for this, the required flow rate for each pump tank (17 scfm) will be multiplied by the number of tanks within the complex (4) and then doubled to add margin of safety. Therefore, for the HDB-8 Complex, the indicated flow shall be greater than or equal to 136 scfm. The LCO value will be based on the value previously derived (136 scfm) and adjusted for instrument uncertainty.

Requiring the auto start of standby fan and low flow control room alarm ensures prompt notification of upset conditions is provided to operators such that appropriate actions can be initiated.

If one of the PVV System fans is inoperable, immediate action shall be taken to stop steam jetted transfers into the affected pump tanks, isolate steam jets in the affected pump tanks and PP/DB sumps, and ensure that the standby fan is online (should be accomplished via interlock actuation) and that the system flow is within limits. Actions associated with the steam jets are taken to ensure that the time-limited actions associated with steam jetted transfers (e.g., recovery times) are not required should another PVV System component become inoperable (e.g., other PVV System fan). Action shall also be taken to restore the primary fan to operable status. The time to complete this action should allow the operators time for actions to restore the equipment to operable status, but sufficiently limiting to not create an unacceptable risk of the other PVV System fan also becoming inoperable. If these actions are not met/completed, the PVV System shall be considered inoperable with the appropriate actions taken as discussed below.

In order for the HDB-8 Complex PVV System to be operable, this LCO also requires an online exhaust HEPA filter capable of removing radioactive particulate from the exhaust stream. If an exhaust HEPA filter is inoperable and an operable HEPA filter is installed in the system and can be placed on line, immediate action shall be taken to place an operable exhaust HEPA filter in service and remove the inoperable HEPA filter from service. This action allows shifting to an operable standby filter, when available in the system.

In the event that the HDB-8 Complex PVV System is inoperable (both fans inoperable) or the exhaust flow is less than the required flow, actions shall be taken to ensure that the flammable vapor concentration remains less than 100% of the LFL and that the possibility of an aerosolization/airborne release event without ventilation flow is minimized. These actions shall include those listed below.

1. Immediately stop liquid additions into the affected pump tank. Stopping liquid additions ensures that the vapor space remains within analyzed values as well as minimizing the potential of overflowing the pump tank to the point of rendering the flow path inoperable. If steam jetting supernate in the pump tank, stopping liquid additions limits the amount of dissolved hydrogen that can be released into the vapor space. Liquid additions necessary to restore ventilation are permitted since they are attempting to place the facility in a safer condition and are expected to be limited in volume as well as short in duration.

2. Immediately stop Waste Transfers associated with the affected PP. Stopping transfers minimizes the potential of a leak occurring above residual values within the affected PP while ventilation is inoperable or flow is less than the minimum required by the safety analysis.

3. Immediately stop agitators and other activities causing mixing in the affected pump tank (excluding air to the dip tubes and normal blowdowns, which are not considered to cause significant mixing). Stopping agitation/mixing reduces the hydrogen release rate in the affected pump tank. An immediate action is warranted since agitation directly impacts the release rate of the hydrogen.

4. Immediately isolate steam/air jets in the affected pump tank and PP/DB sump (jetting with water does not pose an aerosolization or pump tank overheating event concern). Immediately isolating the jets minimizes the potential for an aerosolization event in the pump tank/PP/DB from occurring without operable ventilation. In the case of a steam jetted transfer from a pump tank, isolating the steam jet minimizes the potential of an airborne release due to potential steam heating of the pump tank. A normal air blow (nominal range of 5 to 30 minutes) shall be permitted following jet operation. This post-operation air blow is intended to prevent suckbacks and/or siphons by purging the steam from the jet supply piping and does not have a significant impact on the analyzed aerosolization or pump tank overheating accident progressions. The control that prevents an aerosolization event (piping integrity) is not impacted by the normal air blow. In addition, the secondary confinement and installed HEPA filter will provide some mitigation in the event piping integrity was degraded.

5. Ensure forced ventilation is operating (with proper inlet damper alignment) on the affected pump tank unless it can be demonstrated (on a frequent basis) that the hydrogen concentration is less than or equal to 25% of the LFL until such time that ventilation is restored. Because Waste Transfers (and other hydrogen release activities) have been stopped, temporary transients in excess of 25% of the LFL are acceptable provided that the hydrogen concentration is demonstrated to be below 25% of the LFL within the designated periodicity of the TSR.

   If the PVV System is used for forced ventilation, this action also requires ensuring proper alignment of the exhaust fan inlet dampers (inlet damper open on operating fan and inlet damper closed on idle fan). Ensuring proper alignment will prevent bypass flow conditions associated with an open inlet damper on the non-operating

exhaust fan. Although the PVV System should normally align the inlet dampers, loss of air or power will cause the inlet dampers to fail open.

Completion of Action 2 is not required if the ventilation system is inoperable due solely to SR testing required to declare a HEPA filter operable. This provision allows HEPA testing to establish the in-place performance test efficiency required by SR 4.7.6.4. While performing HEPA testing of a new filter, it is acceptable to allow transfers to continue out of the affected tank. In practical terms, an installed HEPA of unknown efficiency provides some measure of protection. The brief period the HEPA filter bank may be declared inoperable during testing does not appreciably elevate the risk of a release event. However, in the unlikely instance where the efficiency test fails, the operable HEPA filter bank (if available) shall be placed back in service or the Action shall be invoked.

The completion time for restoring ventilation (or ensuring the hydrogen concentration is less than or equal to 25% of the LFL) depends on the time to reach LFL, which is based on the ongoing activity associated with the affected pump tank. The times to LFL are determined as a function of pump tank level for Bounding Sludge Slurry (maximum radiolytic release rate) and Bounding Supernate (steam jet transfer releasing dissolved hydrogen). The time to LFL for pumped Bounding Supernate is bounded by the times to LFL for Bounding Sludge Slurry (i.e., pump does not generate sufficient heat to release significant amounts of dissolved hydrogen). The time to LFL is the time it takes upon loss of ventilation to go from 25% of the LFL to 100% of the LFL. The times to LFL have been determined and are documented in Reference 94. Since the recovery times are based on conservative calculations, and operating procedures assure verification of tank quantities during transfers, the tank levels used as a basis for the recovery times do not include the instrument uncertainty of the tank level indicators based on the logic provided in Reference 15.

As part of restoring the required ventilation flow, continuous ventilation flow shall be supplied to the pump tank/pit for a sufficient duration to perform 12 vapor space turnovers (unless the pump tank vapor space hydrogen concentration is determined to be less than or equal to 25% of the LFL, accounting for organics and uncertainty). This action shall be completed prior to exiting the LCO Condition (ventilation inoperable [both fans inoperable] or flow less than the minimum required). From Reference 17, 12 vapor space turnovers ensures that the flammable vapor concentration is “reset” to the conditions used in the safety analysis (i.e., flammable vapor concentration is less than or equal to 25% of the LFL). This will ensure that the calculated times to LFL are valid. Nominal ventilation flow values (i.e., flows not corrected for instrument uncertainty) may be used when determining the ventilation run time necessary to provide the 12 vapor space turnovers. The use of nominal values for this application is justified considering it only takes approximately seven vapor space turnovers (assuming a mixing efficiency of 0.2) to reduce hydrogen concentration from 100% to 25% of the LFL (Ref. 17). The mixing efficiency of 0.2 is based on the recommended value from NFPA 69 (Ref. 97) Annex D for the ventilation system arrangement (single exhaust opening, non-positive supply ventilation system).

Similar actions and completion times, discussed above, shall be taken in the event that the HDB-8 Complex PVV System flow instrumentation or the interlock is inoperable with the following exceptions. An additional action is required to immediately ensure that a PVV exhaust

fan is operating (with proper inlet damper alignment as previously discussed). This action ensures forced ventilation; such that jetting activities (Action 4 above), are not required to be stopped for this condition. The analysis credits a filtered release path for jetting activities and not a specific flow rate. Therefore, jetting activities are not required to be stopped on low flow conditions as long as a PVV exhaust fan is operating.

Cell covers may need to be removed during maintenance activities associated with the transfer facility. Although the remainder of the ventilation system remains operable, the confinement function of the ventilation system to direct flow to the ventilation system filtered exhaust has been degraded. Functions associated with protecting flammable vapor concentration are not affected by this ventilation system degraded condition. In the event the transfer facility ventilation system is inoperable due solely to removing one or more cell covers, the following actions shall be taken:

1. Immediately stop Waste Transfers associated with the affected DB/PP. Stopping transfers minimizes the potential of a leak or overflow occurring in the affected location.

2. Immediately stop agitators and other activities causing mixing in the affected pump tank (excluding air to the dip tubes and normal blowdowns, which are not considered to cause significant mixing). Stopping agitation/mixing minimizes the potential for an aerosolization event in the pump tank/PP from occurring. This action also stops mixing of sludge solids in the bottom of the pump tank, thus minimizing sludge constituents in the waste that are available for release from a pump tank overflow.

3. Immediately isolate steam/air jets in the HDB-8 Complex (pump tank and PP/DB sumps) (jetting with water does not pose an aerosolization or pump tank overheating event concern). Immediately isolating the jets minimizes the potential for an aerosolization event in the pump tank/PP/DB from occurring. In the case of a steam jetted transfer from a pump tank, isolating the steam jet minimizes the potential of an airborne release due to potential steam heating of the pump tank. A normal air blow (nominal range of 5 to 30 minutes) shall be permitted following jet operation. This post-operation air blow is intended to prevent suckbacks and/or siphons by purging the steam from the jet supply piping and does not have a significant impact on the analyzed aerosolization or pump tank overheating accident progressions. The control that prevents an aerosolization event (piping integrity) is not impacted by the normal air blow. This action may be completed by realignment of the gang valve, or by closing other valves upstream or downstream of the gang valve.

4. Immediately stop liquid additions into HPT-7, HPT-8, HPT-9, and HPT-10, except for small liquid additions needed for maintenance activities as discussed below. Limiting liquid additions minimizes the amount of liquid that could be added to the pump tank, thus minimizing the potential of a pump tank overflow.

During removal, installation, maintenance, and repair of equipment from PPs/pump tanks (e.g., pumps, jumpers, agitators, dip tubes), small volume flushes of the equipment into the pump tank are permitted in order to reduce radiation rates and contamination levels in the cell

associated with the maintenance activity (i.e., minimize worker exposure). The liquid additions allowed by this action are manned evolutions (with the presence of radiological control personnel) and are typically of small volumes (e.g., less than 500 gallons). In the unlikely event that small flushes cause minor pump tank overflow to the respective PP, any significant risk would be limited to the facility worker as the material at risk (both quantity and radiologically) would be significantly less that that assumed in the bounding design basis accident scenario (15,000 gallons of Bounding Sludge Slurry). The material released would tend to have contaminated flush water characteristics (especially since the density of flush water is less than that of supernate or sludge). To that end, facility workers would be able to self-protect as necessary if directed by radiological control personnel. Therefore, it is judged that the risk to the facility worker would be less by permitting the small additions to the pump tank (primary containment) than if the equipment were suspended over the cell sump, and then flushed.

5.5.1.6.1 INSTRUMENT LOOP CALIBRATION ON PROCESS VESSEL VENTILATION SYSTEM EXHAUST FLOW INSTRUMENTATION – H-AREA DIVERSION BOX-8 COMPLEX (SURVEILLANCE REQUIREMENT 4.7.6.1)

The exhaust flow instrumentation (including control room alarm) provides the SS monitoring of the pump tank/pit purge flow conditions and is relied upon to ensure the minimum flow requirements are maintained. These SRs ensure calibration of the flow instruments and that the instruments are read within the uncertainty utilized in the calculation of the setpoints. The surveillance frequency shall be within the loop uncertainty analysis and considered adequate to ensure that the flow instrumentation can perform its intended safety function. This SR also ensures requirements for fiber optic cable analysis (Ref. 80) are met and the surveillance frequency shall be within the loop failure probability analysis (Ref. 51, 81) for alarm loops that utilize fiber optic cable.

5.5.1.6.2 INSTRUMENT LOOP TEST ON PROCESS VESSEL VENTILATION SYSTEM LOW FLOW INTERLOCK (SURVEILLANCE REQUIREMENT 4.7.6.2)

The HDB-8 Complex PVV System fan interlock must be operable to interlock on the standby fan and open/close associated dampers. This loop test shall ensure that the low exhaust flow interlock will send a signal to the exhaust fan inlet dampers and standby fan. The surveillance frequency shall be based on operational experience and engineering judgment and considered adequate to monitor adverse trends in instrumentation performance and decrease the probability of equipment failure.

5.5.1.6.3 VERIFICATION OF PROCESS VESSEL VENTILATION SYSTEM FAN/DAMPER RESPONSE (SURVEILLANCE REQUIREMENT 4.7.6.3)

The HDB-8 Complex PVV System standby exhaust fan is required to start and the exhaust fan inlet dampers are required to realign when commanded by hardwired interlocks, which actuate on low exhaust flow. This function is required by the safety analysis. This function, therefore, will be tested to ensure the standby exhaust fan starts and the exhaust fan inlet dampers realign

(opens inlet damper on standby fan and closes inlet damper on the other fan) on command (i.e., when directed by a signal).

The surveillance frequency shall be based on operational experience and engineering judgment and considered adequate to monitor adverse trends in instrumentation performance and decrease the probability of equipment failure.

5.5.1.6.4 HIGH-EFFICIENCY PARTICULATE AIR FILTER PERFORMANCE TEST (SURVEILLANCE REQUIREMENT 4.7.6.4)

A minimum HEPA filter efficiency of 99.5% bounds the various values used in the analyses (see Section 3.4.1.5.2). Therefore, initial and periodic HEPA filter performance testing (i.e., PAO test or equivalent) shall be performed to ensure an efficiency of 99.5% or better. The surveillance frequency shall be based on the guidance provided in References 19 and 20.

The ventilation system shall be operating at a normal flow rate for the system during the performance test of the HEPA filter. This ensures that the test is performed under the same conditions as the system is expected to operate. Verification of normal flow can be based on having the exhaust fan operating with the system aligned to ventilate the transfer facility, and indication of normal system flow (e.g., installed equipment such as flow indicator, component differential pressures, as applicable, reading within normal limits). This is consistent with the Nuclear Air Cleaning Handbook (Ref. 62), which states that the in-place test is performed at operational airflow.

Transfer facility ventilation systems typically operate near the nominal system flow rate. Variations in ventilation system flow rate will occur normally over time. These variations can occur due to filter loading, changes in ventilation system conditions (such as demister fouling), and position of dampers. Typically, such variations are small relative to the nominal system flow.

HEPA filters capture particles by three basic mechanisms, inertial impaction, Brownian motion, and interception. Two of these mechanisms, inertial impaction and Brownian motion, are affected by flow rate. The efficiency for inertial impaction increases as flow rate increases, while the efficiency due to Brownian motion increases as flow rate decreases. The net effect of these two mechanisms is to maintain overall efficiency relatively constant over a wide range of flows. Therefore, normal variations in flow do not affect the results of the in-place performance test (Ref. 62).

5.5.1.7 <u>H-Area Diversion Box-7 Ventilation System (Limiting Condition for Operation 3.7.7)</u>

Chapter 3 credits the HDB-7 Ventilation System for mitigating the consequences of DB Aerosolization Events (jetting of the sump) and preventing Transfer Facility Explosions (HDB-7 during an ESP Sludge Slurry transfer). The safety function is to purge flammable vapors from the transfer facility and provide a filtered release path to minimize the release of entrained waste from aerosolization events (i.e., failed transfer jet piping). This LCO applies to HDB-7 when forced ventilation was credited in the safety analysis. The ventilation requirements for non-HDB-7 locations are provided in other LCOs (see LCO 3.7.5 and LCO 3.7.6).

This LCO requires that the HDB-7 Ventilation System be operable. To be operable, the ventilation system requires an operating fan generating the required purge flow through the system, an intact flow path (e.g., ductwork, filter housing) from the DB to the fan, and an online exhaust HEPA filter capable of removing radioactive particulate from the exhaust stream. Also for the ventilation system to be operable, the cell covers for HDB-7 must be installed, as the transfer facility structure provides a confinement function to direct flow to the ventilation system filtered exhaust. This LCO is required for transfer lines for which HDB-7 is a credited Leak Detection Location during High-Rem Transfer Mode, during Operation Mode when ESP Sludge Slurry transfers are associated with the DB, and during High-Rem Transfer and Operation Modes for the transfer line from the HDB-7 sump jet while steam/air is supplied to the sump transfer jet. This LCO also requires that the HDB-7 Ventilation System have an operable exhaust flow indicator and that the exhaust flow rate be greater than or equal to a minimum value. The ventilation requirements, when jetting the sump contents during other periods (e.g., Low-Rem Waste Transfers), will be administratively controlled under the Transfer Control Program.

Requiring continuous purge flow through HDB-7 during High-Rem and ESP Sludge Slurry transfers ensures that the concentration of flammable vapors remains below LFL conditions (less than or equal to 25% of the LFL) during and after a release. The required purge flow to maintain flammable vapors in HDB-7 to less than or equal to 25% of the LFL is 103 scfh (Ref. 14). This is the bounding flow rate requirement for HDB-7 and is based on the radiolytic hydrogen generation rate associated with a spill of ESP Sludge Slurry at 90°C in addition to atmospheric breathing. The LCO value will be based on the value derived in the safety analysis (103 scfh) and adjusted for instrument uncertainty.

In the event that the HDB-7 Ventilation System is inoperable (including associated flow instrument) or the exhaust flow is less than the required flow, the actions listed below shall be taken to ensure that the flammable vapor concentration remains less than 100% of the LFL and that the possibility of an aerosolization/airborne release event without ventilation flow is minimized.

1. Immediately stop Waste Transfers associated with HDB-7. Stopping transfers minimizes the potential of a leak occurring above residual values within the DB while ventilation is inoperable or flow is less than the minimum required by the safety analysis and minimizes the additional amount of hydrogen generating waste that may be received into the DB.

2. Immediately isolate steam/air jets in the HDB-7 sump (jetting with water does not pose an aerosolization event concern). Immediately isolating the jets minimizes the potential for an aerosolization event in the DB from occurring without operable ventilation. A normal air blow (nominal range of 5 to 30 minutes) shall be permitted following jet operation. This post-operation air blow is intended to prevent suckbacks and/or siphons by purging the steam from the jet supply piping and does not have a significant impact on the analyzed aerosolization accident progression. The control that prevents an aerosolization event (piping integrity) is not impacted by the normal air blow. In addition, the secondary confinement and installed HEPA filter will provide some mitigation in the event piping integrity was degraded.

3. Ensure forced ventilation is operating on HDB-7 unless it can be demonstrated (on a frequent basis) that the hydrogen concentration is less than or equal to 25% of the LFL until such time that ventilation is restored. Because Waste Transfers (and other hydrogen release activities) have been stopped, temporary transients in excess of 25% of the LFL are acceptable provided that the hydrogen concentration is demonstrated to be below 25% of the LFL within the designated periodicity of the TSR.

The completion time for restoring HDB-7 ventilation shall consider the fact that DBs do not normally store waste (versus pump tanks). Additional consideration should be given to LCOs 3.7.2 and 3.7.3 when determining the completion time. LCO 3.7.2 monitors HDB-7 sump level to protect residual values and take appropriate actions to ensure that these values are not significantly exceeded (i.e., much less than a 15,000-gallon spill).

As part of restoring the required ventilation flow, continuous ventilation flow shall be supplied to HDB-7 for a sufficient duration to perform 12 vapor space turnovers (unless the HDB-7 vapor space hydrogen concentration is determined to be less than or equal to 25% of the LFL, accounting for organics and uncertainty). This action shall be completed prior to exiting the LCO Condition (ventilation inoperable or flow less than the minimum required). From Reference 17, 12 vapor space turnovers ensures that the flammable vapor concentration is "reset" to the conditions used in the safety analysis (i.e., flammable vapor concentration is less than or equal to 25% of the LFL). This will ensure that the calculated times to LFL are valid. Nominal ventilation flow values (i.e., flows not corrected for instrument uncertainty) may be used when determining the ventilation run time necessary to provide the 12 vapor space turnovers. The use of nominal values for this application is justified considering it only takes approximately seven vapor space turnovers (assuming a mixing efficiency of 0.2) to reduce hydrogen concentration from 100% to 25% of the LFL (Ref. 17). The mixing efficiency of 0.2 is based on the recommended value from NFPA 69 (Ref. 97) Annex D for the ventilation system arrangement (single exhaust opening, non-positive supply ventilation system).

A higher flow rate allowance is permitted for a limited period to compensate for reduced performance of the HDB-7 Ventilation System integrity. The additional flow rate of the forced ventilation system must meet the minimum flow requirements stated above with an additional allowance for potential breaches within the length of the ductwork. The additional allowance is dependent on the specific ventilation system fan parameters (e.g., static pressure). Potential breaches for reduced ventilation system integrity apply to HDB-7 Ventilation System components and ductwork originating from the DB to the exhaust fan to include the HEPA filter housing and the exhaust fan housing. A cumulative breach in the system may not exceed a hole size of 0.55 square inches (Ref. 68). This hole size has been determined based on the area of two test plug ports (equivalent to two test plug hole diameters of 19/32 inches each). During periods of reduced system performance, appropriate system parameters are frequently monitored. Reduced performance conditions (e.g., "non-system holes") are identified by routine ventilation system inspections (e.g., operators monitoring system performance, system maintenance, and structural integrity inspections).

5.5.1.7.1 VERIFICATION OF H-AREA DIVERSION BOX-7 EXHAUST FLOW (SURVEILLANCE REQUIREMENT 4.7.7.1)

The HDB-7 Ventilation System exhaust flow ensures that the flammable vapor concentration remains within the analyzed values. Since LCO 3.7.7 requires a minimum ventilation flow rate for the DB, verification on a routine basis is required. This verification also ensures that the exhaust fan is operable and performing its intended safety function as well as ensuring proper damper alignment (i.e., dampers have not changed position).

5.5.1.7.2 INSTRUMENT LOOP CALIBRATION ON HDB-7 EXHAUST FLOW INDICATION (SURVEILLANCE REQUIREMENT 4.7.7.2)

The local exhaust flow indication provides the SS monitoring of the HDB-7 purge flow conditions and is relied upon to ensure the minimum flow requirements are maintained. This SR ensures calibration of the flow instrument and that the instrument reads within the uncertainty utilized in the calculation of the setpoints. The surveillance frequency shall be within the loop uncertainty analysis and considered adequate to ensure that the flow instrumentation can perform its intended safety function.

5.5.1.7.3 HIGH-EFFICIENCY PARTICULATE AIR FILTER PERFORMANCE TEST (SURVEILLANCE REQUIREMENT 4.7.7.3)

A minimum HEPA filter efficiency of 99.5% bounds the various values used in the analyses (see Section 3.4.1.5.2). Therefore, initial and periodic HEPA filter performance testing (i.e., PAO test or equivalent) shall be performed to ensure an efficiency of 99.5% or better. The surveillance frequency shall be based on the guidance provided in References 19 and 20.

The ventilation system shall be operating at a normal flow rate for the system during the performance test of the HEPA filter. This ensures that the test is performed under the same conditions as the system is expected to operate. Verification of normal flow can be based on having the exhaust fan operating with the system aligned to ventilate the transfer facility, and indication of normal system flow (e.g., installed equipment such as flow indicator, component differential pressures, as applicable, reading within normal limits). This is consistent with the Nuclear Air Cleaning Handbook (Ref. 62), which states that the in-place test is performed at operational airflow.

Transfer facility ventilation systems typically operate near the nominal system flow rate. Variations in ventilation system flow rate will occur normally over time. These variations can occur due to filter loading, changes in ventilation system conditions (such as demister fouling), and position of dampers. Typically, such variations are small relative to the nominal system flow.

HEPA filters capture particles by three basic mechanisms, inertial impaction, Brownian motion, and interception. Two of these mechanisms, inertial impaction and Brownian motion, are affected by flow rate. The efficiency for inertial impaction increases as flow rate increases, while the efficiency due to Brownian motion increases as flow rate decreases. The net effect of these two mechanisms is to maintain overall efficiency relatively constant over a wide range of

flows. Therefore, normal variations in flow do not affect the results of the in-place performance test (Ref. 62).

5.5.1.8 Pump Tank Pulse Tube Agitator Interlock (Limiting Condition for Operation 3.7.8)

As discussed in Chapter 3, sparging of waste within F-Area Pump Tank (FPT) FPT-1 is a concern during pulse tube agitation (see Chapter 2 for details of pulse tube agitation). As discussed in Chapter 3, if the controller remains in the drive cycle too long, waste will be expelled from the charge vessel and air will be sparged into the waste. Chapter 3 credits the FPT-1 Pulse Tube Agitator liquid level interlock for ensuring sufficient level remains in the pump tank such that sparging will not occur. The liquid-level interlock must sense a low pump tank level and de-energize the system before sparging of waste occurs. The system is de-energized by closing the main air flow valve.

Therefore, this LCO provides the minimum pump tank level that must be maintained to prevent the aerosolization/sparging event. Because the pump tank level supports the liquid-level interlock, the associated rotameters shall be operable (including the level transmitter). The FPT-1 pulse tube agitator main air flow valve is also required to be operable to support interlock operation. This LCO is applicable for FPT-1 during Operation Mode (only Mode that permits agitator operation) while the portable air compressor is connected to the FPT-1 Pulse Tube Agitator. The LCO value for low level will be 9 inches above the agitator discharge, adjusted for instrument uncertainty (Ref. 21).

In the event that the liquid-level interlock is inoperable, actions shall be taken to immediately shut down the pulse tube agitator (e.g., stop air flow). Note that the level instrumentation will not read accurately with inadequate or excessive flow to one or more of its dip tube legs (weight factor and reference legs). Therefore, the level instrumentation is considered inoperable while air flow is out of limits (low or high). Consideration can be given in the LCO of returning the air flow to within limits without shutting down the agitator provided it can be accomplished before an aerosolization/sparging event can occur (i.e., immediately).

5.5.1.8.1 VERIFICATION OF INSTRUMENT AIR FLOW THROUGH EACH DIP TUBE FLOW INDICATORS (SURVEILLANCE REQUIREMENT 4.7.8.1)

Verifying that air flow to the level instrument dip tubes (weight factor and reference) is within limits by reading the local flow indicators ensures that adequate flow exists for the level instrument to read accurately. The surveillance frequency shall be based on operational experience and engineering judgment and considered adequate to monitor adverse trends in instrumentation performance. This verification also ensures that the Instrument Air System (air compressors) is performing its intended safety function.

5.5.1.8.2 INSTRUMENT LOOP CHECK ON FPT-1 LEVEL INDICATOR (SURVEILLANCE REQUIREMENT 4.7.8.2)

This loop check is intended to detect a gross failure of the instruments between the calibrations of SR 4.7.8.6. Failure of the loop check shall require declaring the instrumentation inoperable.

The surveillance frequency shall be based on operational experience and engineering judgment and considered adequate to monitor adverse trends in instrumentation performance.

5.5.1.8.3 INSTRUMENT LOOP TEST ON PUMP TANK LIQUID LEVEL INTERLOCK (SURVEILLANCE REQUIREMENT 4.7.8.3)

The liquid-level interlock and associated main air flow valve ensures that the pump tank level is sufficient to prevent sparging within the pump tank due to an overblow event. This loop test shall ensure that the pump tank liquid level interlock will send a signal to the main air flow valve upon reaching the low level setpoint. The surveillance frequency shall be based on operational experience and engineering judgment and considered adequate to monitor adverse trends in instrumentation performance and decrease the probability of equipment failure.

5.5.1.8.4 VERIFICATION OF FPT-1 PULSE TUBE AGITATOR MAIN AIR FLOW VALVE CLOSURE (SURVEILLANCE REQUIREMENT 4.7.8.4)

The FPT-1 pulse tube agitator main air flow valve is required to close when commanded by hardwired interlocks, which actuate on low pump tank level. These interlocks are required by the safety analysis to prevent waste sparging within the pump tank.

The FPT-1 pulse tube agitator main air flow valve is designed such that upon an input signal or loss of power/air, air is immediately vented off the main air flow valve. As discussed in Chapter 4, the combined timing to cause closure of the main air flow valve is more than sufficient (i.e., seconds) to avoid the need for a SR specifically on closure timing. This valve, therefore, will be tested to ensure that it closes on command (i.e., when directed by a signal). This test shall verify that the valve will perform this safety function when required.

The surveillance frequency shall be based on operational experience and engineering judgment and considered adequate to monitor adverse trends in instrumentation performance and decrease the probability of equipment failure.

5.5.1.8.5 INSTRUMENT LOOP CHECK ON THE FLOW INDICATORS (SURVEILLANCE REQUIREMENT 4.7.8.5)

The instrument loop check ensures that a gross failure of the instrument has not occurred. The instrument loop check shall include a verification that the indicated flow drops below the lowest non-zero division on the scale when air flow through the rotameter (associated with the weight factor and reference dip tube legs) is isolated. Indicated flow dropping below this value ensures that foreign material or deposits within the rotameter are not preventing the rotameter from indicating low flow conditions.

The surveillance frequency shall be based on operational experience and engineering judgment and considered adequate to monitor adverse trends in instrumentation performance and decrease the probability of equipment failure.

5.5.1.8.6 INSTRUMENT LOOP CALIBRATION ON FPT-1 LEVEL INSTRUMENT LOOP (SURVEILLANCE REQUIREMENT 4.7.8.6)

The level instrumentation is required by the safety analysis to ensure that the pump tank volume remains within analyzed values. Verification of the pump tank level requires use of calibrated instrumentation. This SR ensures calibration of the level instrumentation and that the instrument(s) reads within the uncertainty utilized in the calculation of the level setpoint. The surveillance frequency shall be within the time documented in the uncertainty analysis and considered adequate to ensure that the level instrumentation can perform its intended safety function.

5.5.1.9 Area Radiation Monitoring – Above-Ground Transfer Lines (Limiting Condition for Operation 3.7.9)

Chapter 3 credits Area Radiation Monitors (ARMs) for preventing a Transfer Error scenario from exceeding appropriate EGs (and worker protection) by alerting operators to the initiating condition. Therefore, this LCO requires that portable and/or permanently installed ARMs, specified in accordance with the ARM Location Program, be operable to provide coverage for above-ground transfer lines (including excavation locations) and that the radiation level at the ARM shall be less than or equal to the setpoints of the instruments (as defined by Reference 22). Requiring operable radiation monitoring provides operations personnel with an indication of any increase in radiation levels above the normal expected background levels. An increase in radiation levels may signify a potential release of material from the containment boundary. Therefore, an operable ARM shall be capable of detecting area radiation levels and alerting operators (e.g., control room alarm, local alarm for portable ARMs) when a pre-determined setpoint is reached. Time delay relays (less than or equal to 60 seconds) are permitted on the alarm actuation circuits. The ARM Location Program will specify the type of ARM alarm (e.g., control room or local) required for each of the designated ARM locations. The control room or local alarm for the ARM must provide both audible and visual indications of the alarm condition. This LCO is required during High-Rem Transfer Mode for above-ground transfer lines (including excavation locations).

In the event that a credited ARM is inoperable or radiation levels at the ARM are greater than the setpoints of the instruments, actions shall be taken to immediately stop Waste Transfers associated with the affected radiation monitoring location.

5.5.1.9.1 VERIFICATION OF PORTABLE AREA RADIATION MONITORS ALARM STATUS (SURVEILLANCE REQUIREMENT 4.7.9.1)

This verification shall ensure that any required portable ARMs (ARMs not connected to control room alarms) are not in alarm. Chapter 3 credits ARMs for mitigating Transfer Error scenarios by alerting operators to the initiating condition during High-Rem Waste Transfers such that actions can be taken in 30 minutes. Therefore, verification of the ARM alarm status shall be performed on a frequent basis during High-Rem Waste Transfers.

5.5.1.9.2 VERIFICATION OF AREA RADIATION MONITORS ARE WITHIN RANGE (SURVEILLANCE REQUIREMENT 4.7.9.2)

This verification shall ensure that the indicated radiation rates on the hardwired or portable ARMs are within the range of the meter. This surveillance, including performance frequency, shall be consistent with the guidance outlined in References 22 and 23.

5.5.1.9.3 INSTRUMENT LOOP TEST OF THE WIRELESS AREA RADIATION MONITORS (SURVEILLANCE REQUIREMENT 4.7.9.3)

Performance of an instrument loop test on each required wireless ARM shall ensure that the instruments are capable of detecting an increased radiation level and annunciating it in the applicable control room. The instrument loop test ensures that a gross failure of the instrument has not occurred. This surveillance, including performance frequency, shall be consistent with the guidance outlined in References 22 and 23.

5.5.1.9.4 SOURCE CHECK OF AREA RADIATION MONITOR (SURVEILLANCE REQUIREMENT 4.7.9.4)

Since the safety analysis requires this system to function at above ground leak locations, this SR requires verification that it can perform the function. Performance of a source check on the ARM instrument ensures that the instrument is capable of providing the required alarm to warn personnel of increasing radiation levels. This surveillance, including performance frequency, shall be consistent with the guidance outlined in References 22 and 23. This SR also ensures requirements for fiber optic cable analysis (Ref. 80) are met and the surveillance frequency shall be within the loop failure probability analysis (Ref. 51, 81) for alarm loops that utilize fiber optic cable.

5.5.1.9.5 INSTRUMENT LOOP CALIBRATION OF THE AREA RADIATION MONITORS (SURVEILLANCE REQUIREMENT 4.7.9.5)

LCO 3.7.9 requires that the ARMs to be operable. The ARMs provide the required alarm to warn personnel of increasing radiation levels. This SR ensures calibration of the ARMs. This surveillance, including performance frequency, shall be consistent with the guidance outlined in References 22 and 23.

5.5.1.10 <u>Leak Detection Box, Modified Leak Detection Boxes, Leak Probe Sleeve, and Tank Risers (Limiting Condition for Operation 3.7.10)</u>

Chapter 3 credits the conductivity probes in the LDBs, MLDBs, LPSs, Tank Risers (pump/jet risers), and their associated control room alarms for Transfer Error events and Transfer Facility Explosions (only LDBs along the leak path to the LDB Drain Cell – also refer to LCO 3.7.11). Tank Risers requiring conductivity probes and alarms will be identified via the Transfer Control Program. The probes and alarms are credited with alerting control room operators to liquid in the Leak Detection Location. The operator is then able to take action before the event results in a significant surface release. Therefore, this LCO requires the leak detection instrumentation (conductivity probe and control room alarm) to be operable with the appropriate setpoint value.

The setpoint shall be sufficient to allow the operator time to take action (prevent significant surface release and allow timely removal of the waste to prevent/mitigate deflagrations). The leak detection instrumentation is performing its intended function when liquid in the Leak Detection Location can be identified to the control room such that appropriate actions can be taken. Time delay relays (less than or equal to 60 seconds) are permitted on the alarm actuation circuits. The control room alarm for the conductivity probes must provide both audible and visual indications of the alarm condition. Satisfactory placement of the credited conductivity probe is a requirement for the establishment of leak detection instrumentation operability.

From Chapter 3, this LCO is applicable for transfer lines during High-Rem Transfer Mode for which the Leak Detection Locations are credited on the Transfer Path. High-Rem Waste Transfers through transfer lines for which COPs are credited Leak Detection Locations are prohibited (see Section 5.5.4.2.43). The LDBs associated with the HDB-8 Complex are excluded from this LCO since they do not have hardwired control room alarms. These LDBs drain to the HDB-8 and HPP-7 sumps, which have leak detection instruments with control room alarms. Therefore, HDB-8 and HPP-7 are the credited Leak Detection Locations versus the LDBs (see LCO 3.7.3).

In the event the waste level in one of the subject Leak Detection Locations is greater than the setpoint value or the required conductivity probe is inoperable, the actions listed below shall be taken:

1. Immediately stop Waste Transfers associated with the affected Leak Detection Location. This action minimizes the vapor space reduction associated with the affected Leak Detection Location as well as minimizes the material at risk. For an inoperable conductivity probe, immediately terminating transfers minimizes the potential of a leak/overflow occurring with inoperable leak detection equipment. Transfers associated with performing Action 2 are permitted because they are considered to be short in duration and are necessary to place the Leak Detection Location in a safer condition.

2. Ensure that the waste level in the affected Leak Detection Location is less than or equal to the setpoint value. This action shall be taken prior to restarting a Waste Transfer to ensure that any subsequent leaks associated with the transfer will not overflow the Leak Detection Location and lead to a surface release.

5.5.1.10.1 INSTRUMENT LOOP TEST OF THE CONDUCTIVITY PROBE (SURVEILLANCE REQUIREMENT 4.7.10.1)

Performance of an instrument loop test on each required conductivity probe ensures that the instruments are capable of a detecting a high level condition and annunciating it in the applicable control room. The instrument loop test verifies the operability of the entire instrument loop (e.g., conductivity probe and associated circuitry and control room alarms) with the exception of a limited portion of the common return path encompassing the grounding scheme. This SR shall be performed on a routine basis to ensure that the conductivity probes are maintained in an operable state. This SR also ensures requirements for fiber optic cable analysis (Ref. 80) are met

and the surveillance frequency shall be within the loop failure probability analysis (Ref. 51, 81) for alarm loops that utilize fiber optic cable.

5.5.1.10.2 VERIFICATION OF CONDUCTIVITY PROBE HEIGHT (SURVEILLANCE REQUIREMENT 4.7.10.2)

The leak detection conductivity probe setpoint ensures that operators take action to mitigate the release within 30 minutes. Therefore, conductivity probes are verified to be set at or below the maximum calculated level setpoints.

5.5.1.11 Leak Detection Box Drain Cell (Limiting Condition for Operation 3.7.11)

Chapter 3 credits the LDB Drain Cell fill level for protecting the initial hydrogen concentration used in the Transfer Facility Explosion scenarios (Section 3.4.2.7). Therefore, this LCO requires that the LDB Drain Cell fill level be less than or equal to the level corresponding to the safety analysis residual volume provided in Table 3.4-1, adjusted for instrument uncertainty. Because this LCO is protecting an initial condition assumption in Chapter 3 (initial hydrogen concentration), no equipment operability is specified within this LCO (see LCO 3.7.10). This LCO is required for transfer lines for which the credited Leak Detection Locations (i.e., LDBs) are connected to the LDB Drain Cell. This LCO is applicable in any of the defined transfer line Modes as discussed in Section 5.4.2.

Protecting a maximum level within the LDB Drain Cell ensures that the initial hydrogen concentration is within the analyzed value. With this level protected, atmospheric breathing alone ensures that the initial hydrogen concentration is less than or equal to 25% of the LFL as illustrated in Table 3.4-1. This value is the equilibrium value that is eventually reached based on the generation rate associated with Bounding Sludge Slurry filled to 1.29 vol. % of the LDB Drain Cell.

In the event the waste level in the LDB Drain Cell is greater than the safety analysis value, actions shall be taken to ensure that the waste level in the LDB Drain Cell is less than or equal to the level corresponding to the safety analysis residual volumes provided in Table 3.4-1 (adjusted for uncertainty). This action shall be taken in a timely manner to minimize the amount of hydrogen allowed to accumulate in the LDB Drain Cell.

If actions to restore the LDB Drain Cell level cannot be completed, then either periodic hydrogen monitoring must be performed or periodic purging of the LDB Drain Cell is required to maintain the LDB Drain Cell well less than the LFL. Since the waste level in the LDB Drain Cell is greater than the allowable value to ensure 25% of the LFL is maintained, in between the periodic hydrogen monitoring or purging, the affected LDB Drain Cell vapor space may exceed 25% of the LFL. As an alternative action to periodic hydrogen monitoring or purging of the LDB Drain Cell, verification that the cell cover is removed will also ensure the LDB Drain Cell is maintained less than LFL. Hydrogen is naturally buoyant in air and diffuses readily in the vapor space, thus ensuring the cell cover is removed will be adequate to maintain flammable vapor concentration without performing hydrogen monitoring or purging of the LDB Drain Cell.

5.5.1.11.1 VERIFICATION OF LEAK DETECTION BOX DRAIN CELL WASTE LEVEL (SURVEILLANCE REQUIREMENT 4.7.11.1)

Chapter 3 credits the LDB Drain Cell to have a maximum safety analysis residual volume (provided in Table 3.4-1). Since LCO 3.7.11 requires a maximum level for the LDB Drain Cell, verification on a routine basis is required.

5.5.1.12 242-16H Evaporator Cell Sump Level (Limiting Condition for Operation 3.7.12)

Chapter 3 credits 242-16H Evaporator Cell sump level for protecting the initial hydrogen concentration used in the 242-16H Evaporator Cell Explosion scenario (Section 3.4.2.2). Therefore, this LCO requires that cell sump level be less than or equal to the residual volume provided in Table 3.4-4, adjusted for instrument uncertainty. Because this LCO is protecting an initial condition assumption in Chapter 3 (i.e., initial hydrogen concentration), no equipment operability is specified within this LCO. This LCO is required for Transfer Line Jumpers and associated nozzles in the 242-16H Evaporator Cell when they are configured for liquid transfers through the cell that bypass the evaporator pot. The term "configured for liquid transfers" is not limited to tanks which contain waste (e.g., waste tanks, pump tanks), but also includes any source (e.g., pump tank) that could initiate a transfer of waste, since the concern is with any Process Area that could initiate a leak of waste into the cell with the evaporator not in operation. A transfer line need not be considered "configured for liquid transfers" if the transfer motive force (e.g., transfer pump) is not connected to a power source and no siphon potential exists.

Evaporator System transfer lines and jumpers (e.g., feed jumper, lift jumper) and the evaporator cell secondary containment transfer lines/jumpers are excluded from the Process Area Applicability of LCO 3.7.12. These lines are not applicable since transfers through these lines would occur during evaporator operation.

Protecting maximum level within the 242-16H Evaporator Cell ensures that the initial hydrogen concentration is within the analyzed value. With this level protected, atmospheric breathing alone ensures that the initial flammable vapor concentration is less than or equal to 25% of the LFL (see Section 3.4.1.5.5). This value is the equilibrium value that is eventually reached based on the generation rate associated with Bounding Sludge Slurry filled to 1.29 vol. % of the cell.

The LCO also allows the performance of several types of activities under the administrative control that will increase evaporator sump level without entering the Required Actions of the LCO. The types of activities permitted include flushing the vent line and Gravity Drain Line (GDL), and cleaning/decontamination activities in the cell while under procedural controls. The volume of waste entering the cell sump under these administrative controls shall be limited to 300 gallons above the normal limit of 664 gallons. The volume of liquid added to the cell sump under these administrative controls shall not increase the sump/cell liquid volume to greater than 5,000 gallons. The time that the elevated cell sump level may be maintained is restricted to seven days.

Although this larger sump/cell waste volume would have an equilibrium flammable vapor concentration in the evaporator cell significantly greater than 25% of the LFL (assuming no forced ventilation operating), it would take many months for the cell to approach equilibrium.

Only a minor increase in cell flammable vapor concentration would occur within the seven days if forced ventilation were not operating (Ref. 43).

In the event the waste level in the cell sump is greater than the safety analysis value in Table 3.4-4 (except when operating under the administrative controls stated above), the actions listed below shall be taken:

1. Stop liquid transfers through the cell that bypass the evaporator pot.

2. Ensure that the waste level in the evaporator cell sump is less than or equal to the level corresponding to the safety analysis residual volume provided in Table 3.4-4 (adjusted for uncertainty). This action shall be taken in a timely manner to minimize the amount of hydrogen allowed to accumulate in the evaporator cell.

If Action 2 cannot be completed, then either periodic hydrogen monitoring must be performed or periodic purging of the evaporator cell is required to maintain the evaporator cell well less than the LFL. Since the waste level in the evaporator cell is greater than the allowable value to ensure 25% of the LFL is maintained, in between the periodic hydrogen monitoring or purging, the evaporator cell vapor space may exceed 25% of the LFL. However, the periodicity of the hydrogen monitoring/purging is sufficient, since transfers associated with the evaporator cell have been terminated, to ensure the evaporator cell vapor space does not reach flammable conditions. As an alternative action to periodic hydrogen monitoring or purging of the evaporator cell, verification that at least one evaporator cell cover (on the evaporator cell) is removed will also ensure the evaporator cell is maintained less than LFL. Hydrogen is naturally buoyant in air and diffuses readily in the vapor space, thus ensuring at least one cell cover is removed will be adequate to maintain flammable vapor concentration without performing hydrogen monitoring or purging of the evaporator cell.

5.5.1.12.1 VERIFICATION OF 242-16H EVAPORATOR CELL SUMP LEVEL (SURVEILLANCE REQUIREMENT 4.7.12.1)

Chapter 3 credits the 242-16H Evaporator Cell Sump to have a maximum safety analysis residual volume (provided in Table 3.4-4). Since LCO 3.7.12 requires a maximum level for the cell sump, verification on a routine basis is required.

5.5.1.13 <u>242-16H Evaporator Feed Pump Backflow Prevention Devices (Limiting Condition for Operation 3.7.13)</u>

Chapter 3 credits 242-16H Evaporator Feed Pump Backflow Prevention Devices to provide containment of liquid waste to mitigate an above-ground radioactive material release via the Flush Water System. Therefore, this LCO requires two backflow prevention devices to be operable for the 242-16H Evaporator. The backflow prevention devices must be capable of minimizing reverse flow and each have a leak rate of less than or equal to one gallon per minute (gpm). The one gpm leak rate is based on protecting the consequences in the safety analysis.

This LCO is applicable to the Feed Pump transfer line in Operation Mode in the 242-16H Evaporator during Feed Pump priming or Feed Pump operation. During Feed Pump priming or

operation, this Process Area has the potential to cause waste flow back to the Flush Water System through the 242-16H Evaporator Feed Pump priming suction path. The Feed Pump transfer line for this LCO includes the piping from the Feed Pump suction up to and including the second backflow prevention device.

In the event that a backflow prevention device is inoperable, actions shall be taken immediately to stop Evaporator Feed Pump operation associated with the evaporator. This action eliminates the pressure source of the waste and minimizes the amount of waste that could potentially leak into the Flush Water System. A normal post-operation flush shall be permitted following pump operation. This flush does not have significant impact on the risk of having reverse flow of waste into the Flush Water System, since the Feed Pump is secured. This post-operation flush also reverses any backflow of waste that may have entered the Flush Water System and reduces the radiological dose in the vicinity of the Evaporator Feed Pump/Flush Water System interface.

5.5.1.13.1 VERIFICATION OF BACKFLOW PREVENTION DEVICE LEAK RATE (SURVEILLANCE REQUIREMENT 4.7.13.1)

Chapter 3 credits the 242-16H Evaporator Feed Pump Backflow Prevention Devices to provide containment of liquid waste to mitigate an above-ground radioactive material release via the Flush Water System to less than or equal to the safety analysis value of one gpm. Therefore, verification of this leak rate ensures that the devices are capable of mitigating a backflow condition. Each backflow prevention device must have a leak rate of less than or equal to one gpm at a minimum test pressure corresponding to the Evaporator Feed System design pressure. This surveillance may be performed through a bench test or by an in-place test on the backflow prevention devices. The surveillance frequency shall be sufficient to provide reasonable assurance that the backflow prevention devices can perform their design function and is based on failure rates of check valves (Ref. 67).

5.5.1.14 Valve Box, Drain Valve Box, and High Point Flush Pit Level (Limiting Condition for Operation 3.7.14)

Chapter 3 credits VB, drain VB, and the High Point Flush Pit fill levels for protecting the initial hydrogen concentration used in the Transfer Facility Explosion scenario (Section 3.4.2.7). Therefore, this LCO requires that VB, drain VB, and the High Point Flush Pit fill level be less than or equal to the level corresponding to the safety analysis residual volumes provided in Table 3.4-1, adjusted for instrument uncertainty. Because this LCO is protecting an initial condition assumption in Chapter 3 (i.e., initial hydrogen concentration), no equipment operability is specified within this LCO. This LCO is required for VBs, drain VBs, and the High Point Flush Pit when they are a credited Leak Detection Location as defined by the Transfer Path. This LCO is also required for any VBs, drain VBs, and the High Point Flush Pit through which there has been a transfer. This LCO is applicable in any of the defined transfer line Modes as discussed in Section 5.4.2.

Protecting maximum levels within VBs, drain VBs, and the High Point Flush Pit ensures that the initial hydrogen concentration is within the analyzed value. The amount of waste in VBs, drain VBs, and the HPFP is limited to 1.29% or 0.39% of the available volume of the structure (dependent upon hydrogen generation rate for the location in the analysis). This is based on

maintaining the hydrogen concentration in those locations within the safety analysis, assuming that the waste present in the location has the maximum hydrogen generation rate used in the accident analysis, and considering the effects of atmospheric breathing. For some locations, it is not practical to detect waste volumes as small as 1.29% or 0.39% of the structure volume. In these locations, the amount of waste is limited to a 1 inch level covering the floor of the structure.

In the event the waste level in a VB, drain VB, or the High Point Flush Pit is greater than the safety analysis value, the actions listed below shall be taken:

1. Immediately stop Waste Transfers associated with the affected VB, drain VB, or the High Point Flush Pit. This action minimizes the potential vapor space reduction associated with the affected location as well as minimizes the material at risk. Transfers associated with performing Action 2 are permitted because they are considered to be short in duration and are necessary to place the VB, drain VB, or the High Point Flush Pit in a safer condition.

2. Ensure that the waste level in the affected VB, drain VB, or the High Point Flush Pit is less than or equal to the level corresponding to the safety analysis residual volumes provided in Table 3.4-1 (adjusted for uncertainty). This action shall be taken in a timely manner to minimize the amount of hydrogen allowed to accumulate in the location (i.e., removal of hydrogen generating material).

If Action 2 cannot be completed, then either periodic hydrogen monitoring must be performed or periodic purging of the affected VB, drain VB, or the High Point Flush Pit is required to maintain the affected location well less than the LFL. Since the waste level in the affected VB, drain VB, or the High Point Flush Pit is greater than the allowable value to ensure 25% of the LFL is maintained, in between the periodic hydrogen monitoring or purging, the affected location vapor space may exceed 25% of the LFL. However, the periodicity of the hydrogen monitoring/purging is sufficient, since Waste Transfers associated with the affected VB, drain VB, or the High Point Flush Pit have been terminated, to ensure the affected location vapor space does not reach flammable conditions. As an alternative action to periodic hydrogen monitoring or purging of the affected VB, drain VB, or the High Point Flush Pit, verification that at least one cell cover (on the affected location) is removed will also ensure the location is maintained less than LFL. Hydrogen is naturally buoyant in air and diffuses readily in the vapor space, thus ensuring at least one cell cover is removed will be adequate to maintain flammable vapor concentration without performing hydrogen monitoring or purging of the affected VB, drain VB, or the High Point Flush Pit.

5.5.1.14.1 VERIFICATION OF TRANSFER SYSTEM LEAK DETECTION LOCATION LEVEL (SURVEILLANCE REQUIREMENT 4.7.14.1)

Chapter 3 credits VBs, drain VBs, and the High Point Flush Pit to have a maximum safety analysis residual volume (provided in Table 3.4-1). Since LCO 3.7.14 requires a maximum level for the VBs, drain VBs, and the High Point Flush Pit, verification on a routine basis is required.

5.5.2 WASTE STORAGE TANK TECHNICAL SAFETY REQUIREMENT DERIVATION

The major accidents associated with the waste storage tanks, as detailed in Section 3.4, are as follows:

- Transfer Error/SMP Waste Release
- Aerosolization Events
- Waste Tank Explosion
- Waste Tank Annulus Explosion
- Waste Tank/Pump Tank Overheating
- Waste Tank Wall Failure
- Waste Tank Siphon/Pump-Out
- Tornado and High Winds Event
- Seismic Event
- Wildland Fire
- Loss of Offsite Power

Refer to Chapter 3 for a detailed description of the events (initiating events, event progressions, etc.) related to waste tanks. Table 5.9-1 identifies the SSCs and ACs that must function to prevent/mitigate the waste tank events and that were evaluated for TSR coverage.

No LCOs are associated with or apply to waste tanks in Closure Mode; therefore, the following waste storage tank LCO subsections do not discuss Mode applicability to Closure Mode waste tanks.

5.5.2.1 Waste Tank Purge Ventilation System (Limiting Condition for Operation 3.8.1)

The safety analysis credits the waste storage tank ventilation to prevent Waste Tank Explosion events. Additionally, the safety analysis credits waste storage tank ventilation to mitigate airborne releases for the Waste Tank Overheating event and Aerosolization Events. The safety analysis also credits the ventilation system to provide an active elevated release path (via the exhaust stack) to ensure adequate dispersion of potential chemical vapors from the waste tank vapor space during receipt of Chemical Cleaning Transfers (or vent/drain operations associated with the transfer).

As defined in Chapter 3, Rapid Generation Tanks are waste storage tanks that have been determined to reach 100% of the LFL (Composite Lower Flammability Limit [CLFL] for Tank 50) in less than 28 days following a loss of ventilation. Slow Generation Tanks are waste storage tanks that have been determined to reach 100% of the LFL (CLFL for Tank 50) in greater than or equal to 28 days following a loss of ventilation. Very Slow Generation Tanks are waste storage tanks that have been determined to never reach LFL (CLFL for Tank 50) considering atmospheric breathing only. The Flammability Control Program details the waste tank flammability classification requirements.

The Waste Tank Purge Ventilation System is credited with the following safety functions:

- Provides sufficient purge flow rate through the tank (Rapid Generation Tanks and Slow Generation Tanks, excluding Tank 50) to maintain the tank bulk vapor space less than or equal to 25% of the LFL (accounting for dissolved hydrogen release from steam jetted transfers [excluding Tanks 40 and 51 when classified as an ESP Sludge Slurry Waste Tank] and radiolytic hydrogen generation). This function will ensure that the tank bulk vapor space is maintained less than or equal to the hydrogen concentration safety analysis value and protect the initial hydrogen concentration to ensure that the minimum time to LFL associated with the waste tank flammability classification is protected.
- Provides sufficient purge flow rate through the tank (Very Slow Generation Tanks during receipt of a steam jetted transfer), accounting for dissolved hydrogen release, to ensure that the minimum time to LFL associated with the waste tank flammability classification is protected.
- Provides sufficient purge flow rate through Tank 50 (when classified as a Rapid Generation Tank or Slow Generation Tank) to maintain the hydrogen concentration in the waste tank bulk vapor space to less than or equal to 3.8% of the LFL (accounting for radiolytic hydrogen generation). This function protects the initial hydrogen concentration to ensure that the minimum time to CLFL associated with the waste tank flammability classification is protected.
- During free supernate removal activities on Rapid Generation Tanks and Slow Generation Tanks (in conjunction with the Gas Release Program), maintains the minimum time to LFL defined by the waste tank flammability classification (and associated minimum ventilation flow rate requirements).
- For spontaneous liberation events and other activities (sludge agitation, bulk saltcake dissolution, and saltcake interstitial liquid removal) on Rapid Generation Tanks and Slow Generation Tanks, minimizes the potential for reaching a flammable vapor concentration by providing a continuous purge of the tank vapor space.
- Provides an active filtered release path to minimize the release of entrained waste from Waste Tank Overheating and Aerosolization Events (during waste tank mixing device or transfer jet operations).
- Provides an active elevated release path (via the exhaust stack) to ensure adequate dispersion of potential chemical vapors from the waste tank vapor space during receipt of Chemical Cleaning Transfers (or vent/drain operations associated with the transfer).

To satisfy the flammability safety functions of the ventilation system, a minimum ventilation flow rate is required. For Tank 50, the analysis contained in Reference 69 demonstrates that a minimum flow rate of 45 scfm is adequate to protect the initial hydrogen concentration (3.8% of the LFL accounting for the radiolytic hydrogen generation) within the tank vapor space. However, the minimum ventilation flow rate in Chapter 3 for Tank 50 will be 72 scfm when classified as a Rapid Generation Tank and 45 scfm when classified as a Slow Generation Tank.

The 72 scfm and 45 scfm flow rates for Tank 50 do not account for hydrogen released from steam jetted transfers; however, steam jetted transfers into Tank 50 are prohibited.

For the remaining waste tanks, Chapter 3 calculates a minimum ventilation flow rate to be 72 scfm for Rapid Generation Tanks (Ref. 24) and 45 scfm for Slow Generation Tanks (Ref. 25). For Tanks 40 and 51, when classified as an ESP Sludge Slurry Waste Tank, the minimum flow rate is 188 scfm (Ref. 24). These values (45, 72, and 188 scfm) are derived using bounding conditions with respect to tank level, radiolytic hydrogen generation rate, and dissolved hydrogen from steam jetted transfers and will maintain the hydrogen concentration to less than or equal to 25% of the LFL. The 188 scfm flowrate for Tanks 40 and 51 (when classified as an ESP Sludge Slurry Waste Tank) does not account for hydrogen released from steam jetted transfers; however, steam jetted transfers into ESP Sludge Slurry Waste Tanks are prohibited. For Tank 40 and Tank 51 minimum ventilation flow rate requirements, the TSRs have been conservatively structured to provide only a single flow value (188 scfm) as a Rapid Generation Tank to protect the flow requirement determined in Reference 24 under the most bounding conditions (i.e., when classified as an ESP Sludge Slurry Waste Tank). Therefore, LCO 3.8.1 does not distinguish separate flow rate values between these tanks when classified as Rapid Generation Tanks or ESP Sludge Slurry Waste Tanks. When Tanks 40 or 51 are classified as Slow Generation Tanks, the minimum ventilation flow rate is 45 scfm (Ref. 25). Chapter 3 also requires a minimum ventilation flow rate to be 45 scfm for Very Slow Generation Tanks when receiving a steam jetted transfer.

For free supernate removal activities on Rapid Generation Tanks and Slow Generation Tanks, the ventilation system (and associated minimum ventilation flow rate requirements discussed above) in conjunction with the Gas Release Program ensures that free supernate removal activities will be within hydrogen release rate limits to maintain the minimum time to LFL (CLFL for Tank 50) defined by the waste tank flammability classification.

This LCO requires that the Waste Tank Purge Ventilation System be operable and delivering a flow rate, for Rapid Generation Tanks, of at least 72 scfm (188 scfm for Tanks 40 and 51) as well as a filtered release path. The LCO value for Rapid Generation Tanks will be based on the safety analysis value (72 or 188 scfm) adjusted for instrument uncertainty. For those tanks classified as Rapid Generation Tanks, flow indication is required. Because tanks classified as Very Slow Generation Tanks (when receiving a steam jetted transfer) and Slow Generation Tanks have a minimum required purge flow that is small compared to system capacity, flow indication is not required. To be operable, the Waste Tank Purge Ventilation Systems require an operating fan generating the required purge flow through the system, an intact flow path (e.g., ductwork, filter housing, reheater shell) from the waste tank to the fan (or to the exhaust flow indicator if located downstream of the fan, if a flow indicator is required), and an online exhaust HEPA filter capable of removing radioactive particulate from the exhaust stream. For waste tanks that are the receipt tank for a Chemical Cleaning Transfer (or vent/drain operation associated with the transfer), an intact flow path from the waste tank to the exhaust stack discharge is required.

This LCO is required for Rapid Generation Tanks and Slow Generation Tanks in Operation and Non-Acidic Chemical Cleaning Modes (see LCO 3.8.9 for Gas Release Mode or LCO 3.8.15 for

Acidic Chemical Cleaning Mode). Additionally, this LCO is required for Very Slow Generation Tanks in Non-Acidic Chemical Cleaning Mode when waste tank mixing devices are operating. This LCO is also required for Very Slow Generation Tanks in Operation Mode when waste tank mixing devices are operating, when steam/air is supplied to the transfer jet, or when receiving a steam jetted transfer. Activities permitted during these Modes are discussed in Section 5.4.3.

In order for the Waste Tank Purge Ventilation System to be operable, this LCO also requires an online exhaust HEPA filter capable of removing radioactive particulate from the exhaust stream. If an exhaust HEPA filter is inoperable and an operable HEPA filter is installed in the system and can be placed on line, immediate action shall be taken to place an operable exhaust HEPA filter in service and remove the inoperable HEPA filter from service. This action allows shifting to an operable standby filter, when available in the system, and is not applicable to ventilation systems with only one installed HEPA filter or that require both exhaust HEPA filters.

In the event the exhaust flow is less than 72 scfm (188 scfm for Tanks 40 and 51) for a Rapid Generation Tank, the ventilation system is inoperable (Rapid Generation Tank or Slow Generation Tank), or the flow indicator is inoperable for a Rapid Generation Tank, the following actions shall be taken:

1. Immediately stop liquid additions into the affected tank (except for Contingency Transfer System transfers and those liquid additions needed to place the tank in a safe condition).

2. Immediately stop Waste Transfers out of the affected tank.

3. Immediately stop waste tank mixing devices in the affected tank.

4. Immediately stop transfer pumps associated with waste tank recirculation in the affected tank.

5. Immediately isolate steam/air to the transfer jet in the affected tank.

6. Ensure forced ventilation is operating on the affected tank (and verified periodically until tank ventilation is restored) or verify, excluding Tank 50, hydrogen concentration is less than or equal to the safety analysis value defined by the Flammability Control Program.

Additionally, if the ventilation system is inoperable on a waste tank that is the receipt tank for a Chemical Cleaning Transfer (or vent/drain operation associated with the transfer), Industrial Hygiene monitoring and protective actions (as required) shall be initiated immediately. This action ensures worker exposure to mercury is within safe levels when the ventilation system is in a degraded condition.

For ventilation systems that contain two 100% capacity HEPA banks, completion of Actions 1, 2, and 4 are not required if the ventilation system is inoperable due solely to SR testing required to declare a HEPA filter operable. This provision allows HEPA testing to establish the in-place performance test efficiency required by SR 4.8.1.5. While performing HEPA testing of a new

filter, it is acceptable to allow transfers to continue into/out of the affected tank. In practical terms, an installed HEPA of unknown efficiency provides some measure of protection. The brief period the HEPA filter bank may be declared inoperable during testing does not appreciably elevate the risk of a release event. However, in the unlikely instance where the efficiency test fails, the operable HEPA filter bank (if available) shall be placed back in service or the actions shall be invoked.

The need for the immediate completion time for Actions 1, 2, 3, and 4 above are warranted because these activities directly affect the release rate of hydrogen (dissolved and trapped) as well as reducing the vapor space volume (impacts time to LFL [CLFL for Tank 50]). The limited liquid additions allowed by Action 1 are typically of small volumes. Although introduction of this liquid to the waste tank will cause a minor increase in tank level, the increase in risk associated with these small additions is considered acceptable considering the potential benefits achieved by the additions (e.g., restoring ability to transfer liquid out of the tank, restoring normal ventilation on the tank, restoring ability to monitor liquid level). Allowing Contingency Transfer System transfers to continue or start (Action 1) is intended to ensure that transfers necessary to support emptying an affected waste tank annulus are not prohibited. Contingency Transfer System transfers are transfers of waste from the annulus of a leaking waste tank back to the primary side of the same waste tank using the Contingency Transfer System, and these transfers do not reduce waste tank vapor space volume and have minimal impact on additional hydrogen release from the waste. Immediately isolating steam/air to the transfer jet (Action 5 above) is required due to the nature of the potential release (aerosolization of waste or airborne release due to potential steam heating of the waste tank). A normal air blow (nominal range of 5 to 30 minutes) shall be permitted following jet operation. This post-operation air blow is intended to prevent suckbacks and/or siphons by purging the steam from the jet supply piping and does not have a significant impact on the analyzed aerosolization or waste tank overheating accident progressions. The control that prevents an aerosolization event (piping integrity) is not impacted by the normal air blow. In addition, the Process Area confinement and installed HEPA filter will provide some mitigation in the event piping integrity was degraded.

Forced ventilation shall be provided (Action 6) to Rapid Generation Tanks within seven days (minimum time to LFL [CLFL for Tank 50] as protected through the Flammability Control Program, Waste Tank Quiescent Time Program, and Gas Release Program) unless vapor space monitoring (excluding Tank 50) is initiated (also within seven days) and continued on a frequent basis until tank ventilation is restored. The monitoring shall ensure that the vapor space hydrogen concentration (excluding Tank 50) remains less than or equal to the safety analysis value established by the Flammability Control Program. If the hydrogen concentration exceeds the limit, the actions of LCO 3.8.2 are applicable (excluding Tank 50).

Forced ventilation shall be provided (Action 6) to Slow Generation Tanks within 28 days (minimum time to LFL [CLFL for Tank 50] as protected through the Flammability Control Program, Waste Tank Quiescent Time Program, and Gas Release Program) unless vapor space monitoring (excluding Tank 50) is initiated (also within 28 days) and continued on a frequent basis until tank ventilation is restored. The monitoring shall ensure that the vapor space hydrogen concentration (excluding Tank 50) remains less than or equal to the safety analysis

value established by the Flammability Control Program. If the hydrogen concentration exceeds the limit, the actions of LCO 3.8.3 are applicable (excluding Tank 50).

In the event the ventilation system is inoperable for a Very Slow Generation Tank, the following actions shall be taken:

1. Immediately stop steam jetted transfers into the affected tank.

2. Immediately stop waste tank mixing devices in the affected tank.

3. Immediately isolate steam/air to the transfer jet in the affected tank.

These actions eliminate the need for the safety function of the Very Slow Generation Tank ventilation system (i.e., eliminates activities directly related to dissolved hydrogen release and eliminates the mechanism for producing aerosolization within the tank).

Additionally, if the ventilation system is inoperable on a waste tank that is the receipt tank for a Chemical Cleaning Transfer (or vent/drain operation associated with the transfer), Industrial Hygiene monitoring and protective actions (as required) shall be initiated immediately. This action ensures worker exposure to mercury is within safe levels when the ventilation system is in a degraded condition.

A higher flow rate allowance is permitted for a limited period to compensate for reduced performance of the Waste Tank Purge Ventilation System integrity. The additional flow rate of the forced ventilation system must meet the minimum flow requirement of 72 scfm (188 scfm for Waste Tanks 40 and 51) for Rapid Generation Tanks with an additional allowance for potential breaches within the length of the ductwork. The additional allowance is dependent on the specific ventilation system fan parameters (e.g., static pressure). Potential breaches for reduced Waste Tank Purge Ventilation System integrity apply to Waste Tank Purge Ventilation System components and ductwork originating from the tank to the purge exhaust fan to include the reheater, HEPA filter housing, and the exhaust fan housing. A cumulative breach in the system may not exceed a hole size of 0.55 square inches (Ref. 68). This hole size has been determined based on the area of two test plug ports (equivalent to two test plug hole diameters of 19/32 inches each). During periods of reduced system performance, appropriate system parameters are frequently monitored. Reduced performance conditions (e.g., “non-system holes”) are identified by routine ventilation system inspections (e.g., operators monitoring system performance, system maintenance, and structural integrity inspections).

5.5.2.1.1 RAPID GENERATION TANK VENTILATION FLOW VERIFICATION (SURVEILLANCE REQUIREMENT 4.8.1.1)

Since LCO 3.8.1 requires a minimum waste tank ventilation flow rate for Rapid Generation Tanks (72 or 188 scfm), verification on a routine basis is required. This surveillance is met by reading and recording the measured flow rate of the credited flow indication instrument. The frequency of the surveillance shall ensure that there is adequate time to respond to a loss of tank vapor space purge flow.

5.5.2.1.2 SLOW GENERATION TANK AND VERY SLOW GENERATION TANK VENTILATION VERIFICATION (SURVEILLANCE REQUIREMENT 4.8.1.2)

Since LCO 3.8.1 requires ventilation system to be operable, verification on a routine basis is required. This surveillance shall be accomplished by visual and/or audible inspection that the exhaust fan is operating to ventilate the waste tank. The frequency of the surveillance shall ensure that there is adequate time to respond to a loss of tank vapor space purge flow.

5.5.2.1.3 SLOW GENERATION TANK AND VERY SLOW GENERATION TANK EXHAUST FAN CAPACITY VERIFICATION (SURVEILLANCE REQUIREMENT 4.8.1.3)

Since LCO 3.8.1 requires a minimum waste tank ventilation flow rate, verification of the exhaust fan capacity on a periodic basis is required for Slow Generation Tanks and Very Slow Generation Tanks. The minimum flow required to be verified for Slow Generation Tanks and Very Slow Generation Tanks is 45 scfm. This surveillance shall be accomplished by reading and recording the measured flow rate using either installed flow instrumentation or Measuring and Test Equipment and accounting for uncertainty. The frequency of the surveillance shall be based on operational experience and engineering judgment and considered adequate to monitor adverse trends in equipment performance.

5.5.2.1.4 INSTRUMENT LOOP CALIBRATION OF EXHAUST FLOW INDICATOR ON RAPID GENERATION TANKS (SURVEILLANCE REQUIREMENT 4.8.1.4)

The installed ventilation flow indication is required to be operable on Rapid Generation Tanks. This SR ensures calibration of the credited flow indicator and that the associated instrumentation reads within the calculated uncertainty. The surveillance frequency shall be within the time documented in the uncertainty analysis and shall be based on operational experience and engineering judgment to ensure that the installed flow indicator can perform its intended safety function.

5.5.2.1.5 HIGH-EFFICIENCY PARTICULATE AIR FILTER PERFORMANCE TEST (SURVEILLANCE REQUIREMENT 4.8.1.5)

A minimum HEPA filter efficiency of 99.5% bounds the various values used in the analyses (see Section 3.4.1.5.2). Therefore, initial and periodic HEPA filter performance testing (i.e., PAO test or equivalent) shall be performed to ensure an efficiency of 99.5% or better. The surveillance frequency shall be based on the guidance provided in References 19 and 20.

The ventilation system shall be operating at a normal flow rate for the system during the performance test of the HEPA filter. This ensures that the test is performed under the same conditions as the system is expected to operate. Verification of normal flow can be based on having the exhaust fan operating with the system aligned to ventilate the waste tank, and indication of normal system flow (e.g., installed equipment such as flow indicator, tank vacuum, component differential pressures, as applicable, reading within normal limits). This is consistent

with the Nuclear Air Cleaning Handbook (Ref. 62), which states that the in-place test is performed at operational airflow.

Tank ventilation systems typically operate near the nominal system flow rate. Variations in ventilation system flow rate will occur normally over time. These variations can occur due to filter loading, changes in ventilation system conditions (such as demister fouling), and position of dampers. Typically, such variations are small relative to the nominal system flow.

The minimum required ventilation flow rate for removal of flammable vapors varies based on waste tank flammability classification (i.e., Rapid Generation Tank, Slow Generation Tank, Very Slow Generation Tank). Although the minimum required flow for flammable vapor removal changes with waste tank flammability classification, the actual ventilation flow rate is not changed. Typically, the ventilation system flow is well in excess of the minimum required flow for Rapid Generation Tanks, regardless of the waste tank flammability classification.

HEPA filters capture particles by three basic mechanisms, inertial impaction, Brownian motion, and interception. Two of these mechanisms, inertial impaction and Brownian motion, are affected by flow rate. The efficiency for inertial impaction increases as flow rate increases, while the efficiency due to Brownian motion increases as flow rate decreases. The net effect of these two mechanisms is to maintain overall efficiency relatively constant over a wide range of flows. Therefore, normal variations in flow do not affect the results of the in-place performance test (Ref. 62).

5.5.2.2 Hydrogen Monitoring - Rapid Generation Tanks (Limiting Condition for Operation 3.8.2)

Chapter 3 credits waste storage tank hydrogen monitoring for Rapid Generation Tanks and Slow Generation Tanks (excluding Tank 50). The hydrogen monitoring provides additional validation of the effectiveness of the credited waste tank ventilation (LCO 3.8.1). From Chapter 3, the extent of the waste tank hydrogen monitoring and the equipment required to be operable depends on the Mode status of the tank (Gas Release/Operation/Acidic Chemical Cleaning/Non-Acidic Chemical Cleaning).

This LCO states the waste tank hydrogen monitoring requirements that are associated with Rapid Generation Tanks (excluding Tank 50) in the Operation and Non-Acidic Chemical Cleaning Modes. As defined in Chapter 3, Rapid Generation Tanks are waste storage tanks that have been determined to reach 100% of the LFL in less than 28 days following a loss of ventilation. The Flammability Control Program details the waste tank flammability classification requirements. The hydrogen monitoring requirements for tanks under a different Mode (excluding Tank 50) are discussed in separate LCOs (see LCOs 3.8.3, 3.8.10, and 3.8.16).

Chapter 3 credits waste storage tank periodic hydrogen monitoring (excluding Tank 50) to allow detection of a high hydrogen concentration and subsequent operator response. Therefore, this LCO requires that the waste tank vapor space hydrogen concentration be less than or equal to the safety analysis value defined by the Flammability Control Program. The LCO value for hydrogen concentration (determined by the Flammability Control Program) will be based on the safety analysis value, adjusted for potential organics and instrument accuracy. The margin for

instrument accuracy shall be based on engineering judgment and the use of M&TE to perform the measurements needed to meet this LCO.

Waste tank vapor space flammability monitoring, in conjunction with Administrative Controls, ensures that conditions causing excessive hydrogen concentration can be detected and actions taken in sufficient time to prevent a tank explosion. The Flammability Control Program, Waste Tank Quiescent Time Program, and Gas Release Program ensure Rapid Generation Tanks are controlled so that a minimum of seven days are available for the tank vapor space to reach 100% of the LFL.

In the event that the waste tank vapor space hydrogen concentration is greater than the safety analysis value defined by the Flammability Control Program, the following actions shall be taken:

1. Immediately stop liquid additions into the affected tank (except for Contingency Transfer System transfers and those liquid additions needed to place the tank in a safe condition).

2. Immediately stop Waste Transfers out of the affected tank.

3. Immediately stop waste tank mixing devices in the affected tank.

4. Immediately stop transfer pumps associated with waste tank recirculation in the affected tank.

5. Ensure forced ventilation is operating on the affected tank and frequently verified (considering the Rapid Generation Tank flammability classification) to be effective until such time that the hydrogen concentration is less than or equal to the safety analysis value defined by the Flammability Control Program.

The need for the immediate completion time for Actions 1, 2, 3, and 4 above are warranted because these activities directly affect the release rate of hydrogen (dissolved and trapped) as well as reducing the vapor space volume (impacts time to LFL). The limited liquid additions allowed by Action 1 are typically of small volumes. Although introduction of this liquid to the waste tank will cause a minor increase in tank level, the increase in risk associated with these small additions is considered acceptable considering the potential benefits achieved by the additions (e.g., restoring ability to transfer liquid out of the tank, restoring normal ventilation on the tank, restoring ability to monitor liquid level). Allowing Contingency Transfer System transfers to continue or start (Action 1) is intended to ensure that transfers necessary to support emptying an affected waste tank annulus are not prohibited. Contingency Transfer System transfers are transfers of waste from the annulus of a leaking waste tank back to the primary side of the same waste tank using the Contingency Transfer System, and these transfers do not reduce waste tank vapor space volume and have minimal impact on additional hydrogen release from the waste.

5.5.2.2.1 WASTE TANK VAPOR SPACE HYDROGEN CONCENTRATION VERIFICATION (SURVEILLANCE REQUIREMENT 4.8.2.2)

Since LCO 3.8.2 limits the maximum waste tank vapor space hydrogen concentration, routine verification of the hydrogen concentration is required. This surveillance, which was developed using portable monitors only, is met by reading and recording the measured percent LFL from a portable monitor. The frequency of the surveillance shall ensure that there is adequate time to respond to high hydrogen concentration, based on the waste tank flammability classification (including consideration of potential spontaneous liberation events).

5.5.2.3 Hydrogen Monitoring - Slow Generation Tanks (Limiting Condition for Operation 3.8.3)

Chapter 3 credits waste storage tank hydrogen monitoring for Rapid Generation Tanks and Slow Generation Tanks (excluding Tank 50). The hydrogen monitoring provides additional validation of the effectiveness of the credited waste tank ventilation (LCO 3.8.1). From Chapter 3, the extent of the waste tank hydrogen monitoring and the equipment required to be operable depends on the Mode status of the tank (Gas Release/Operation/Acidic Chemical Cleaning/Non-Acidic Chemical Cleaning).

This LCO states the waste tank hydrogen monitoring requirements that are associated with Slow Generation Tanks (excluding Tank 50) in the Operation and Non-Acidic Chemical Cleaning Modes. As defined in Chapter 3, Slow Generation Tanks are waste storage tanks that have been determined to reach 100% of the LFL (CLFL for Tank 50) in greater than or equal to 28 days following a loss of ventilation. The Flammability Control Program details the waste tank flammability classification requirements. The hydrogen monitoring requirements for tanks under a different Mode (excluding Tank 50) are discussed in separate LCOs (see LCO 3.8.2, LCO 3.8.10, and 3.8.16).

Chapter 3 credits waste storage tank periodic hydrogen monitoring (excluding Tank 50) to allow detection of a high hydrogen concentration and subsequent operator response. Therefore, this LCO requires that the waste tank vapor space hydrogen concentration be less than or equal to the safety analysis value defined by the Flammability Control Program. The LCO value for hydrogen concentration (determined by the Flammability Control Program) will be based on the safety analysis value, adjusted for potential organics and instrument accuracy. The margin for instrument accuracy shall be based on engineering judgment and the use of M&TE to perform the measurements needed to meet this LCO.

Waste tank vapor space flammability monitoring, in conjunction with Administrative Controls, ensures that conditions causing excessive hydrogen concentration can be detected and actions taken in sufficient time to prevent a tank explosion. The Flammability Control Program, Waste Tank Quiescent Time Program, and Gas Release Program ensure Slow Generation Tanks are controlled so that a minimum of 28 days are available for the tank vapor space to reach 100% of the LFL.

In the event that the waste tank vapor space hydrogen concentration is greater than the safety analysis value defined by the Flammability Control Program, the following actions shall be taken:

1. Immediately stop liquid additions into the affected tank (except for Contingency Transfer System transfers and those liquid additions needed to place the tank in a safe condition).

2. Immediately stop Waste Transfers out of the affected tank.

3. Immediately stop waste tank mixing devices in the affected tank.

4. Immediately stop transfer pumps associated with waste tank recirculation in the affected tank.

5. Ensure forced ventilation is operating on the affected tank and frequently verified (considering the Slow Generation Tank flammability classification) to be effective until such time that the hydrogen concentration is less than or equal to the safety analysis value defined by the Flammability Control Program.

The need for the immediate completion time for Actions 1, 2, 3, and 4 above are warranted because these activities directly affect the release rate of hydrogen (dissolved and trapped) as well as reducing the vapor space volume (impacts time to LFL). The limited liquid additions allowed by Action 1 are typically of small volumes. Although introduction of this liquid to the waste tank will cause a minor increase in tank level, the increase in risk associated with these small additions is considered acceptable considering the potential benefits achieved by the additions (e.g., restoring ability to transfer liquid out of the tank, restoring normal ventilation on the tank, restoring ability to monitor liquid level). Allowing Contingency Transfer System transfers to continue or start (Action 1) is intended to ensure that transfers necessary to support emptying an affected waste tank annulus are not prohibited. Contingency Transfer System transfers are transfers of waste from the annulus of a leaking waste tank back to the primary side of the same waste tank using the Contingency Transfer System, and these transfers do not reduce waste tank vapor space volume and have minimal impact on additional hydrogen release from the waste.

5.5.2.3.1 WASTE TANK VAPOR SPACE HYDROGEN CONCENTRATION VERIFICATION (SURVEILLANCE REQUIREMENT 4.8.3.1)

Since LCO 3.8.3 limits the maximum waste tank vapor space hydrogen concentration, routine verification of the hydrogen concentration is required. This surveillance, which was developed using portable monitors only, is met by reading and recording the measured percent of LFL from a portable monitor. The frequency of the surveillance shall ensure that there is adequate time to respond to high hydrogen concentration, based on the waste tank flammability classification (including consideration of potential spontaneous liberation events).

5.5.2.4 Waste Storage Tank Level (Limiting Condition for Operation 3.8.4)

Chapter 3 credits the waste storage tank fill level for the Transfer Error (tank overflow), Waste Tank Explosion events, and Waste Tank Siphon/Pump-Out events (Waste Tanks 1, 2, 3, 4, 7, 8, 9, 10, and 11). Additionally, maximum tank level protects initial conditions/assumptions used in the Aerosolization, Waste Tank Annulus Explosion, Waste Tank/Pump Tank Overheating, and Waste Tank Wall Failure events. Each waste storage tank is equipped with at least one High Liquid-Level Conductivity Probe (HLLCP). The HLLCP is the credited means for detecting exceeding the waste tank fill limit. A waste tank fill limit is based on one of following concerns:

- Waste tank overflow
- Flammability concerns (time to LFL [CLFL for Tank 50])
- Siphon potential for Waste Tanks 1, 2, 3, 4, 7, 8, 9, 10, and 11
- Structural integrity concerns
- Flammable transient concern (trapped gas releases)
- Maximum annulus equilibrium liquid level (following a tank wall breach) – for Type I/II Non-Acidic Chemical Cleaning Waste Tanks

The tank overflow limits also serve to protect assumptions associated with tank wall exposed area in certain analyses. The fill limit for each tank is the liquid level associated with the most limiting concern associated with the tank. Excluding Type I/II Non-Acidic Chemical Cleaning Waste Tanks, the fill limit accounts for the maximum volume associated with a Transfer Error event (i.e., 15,000 gallons).

From Chapter 3, the waste level and monitoring requirements depends on the Mode status of the tank (Gas Release/Operation/Acidic Chemical Cleaning/Non-Acidic Chemical Cleaning). This LCO states the waste level and monitoring requirements that are associated with Gas Release, Operation, and Non-Acidic Chemical Cleaning Modes. The waste level and monitoring requirements for Acidic Chemical Cleaning Mode is discussed in LCO 3.8.17.

This LCO provides the fill limit for each waste storage tank as well as requiring the operability of the HLLCP and associated control room alarm. Some waste storage tanks have two control room alarms associated with the HLLCP. For these waste tanks, this LCO requires operability of both control room alarms. Each HLLCP must be capable of providing alarm indication in the applicable control room. The control room alarm alerts the operator that the tank liquid level is at (or above) the fill limit setpoint. Time delay relays (less than or equal to 60 seconds) are permitted on the alarm actuation circuits. The control room alarm(s) for the HLLCPs must provide both audible and visual indications of the alarm condition. Satisfactory placement of the credited HLLCP is a requirement for the establishment of tank level instrumentation operability. The specific fill limit for each tank shall be determined by the Tank Fill Limits Program (see Section 5.5.4.2.44).

The tank liquid levels credited in the Transfer Error event (overflow) are typically set below the lowest penetration of the primary tank liner, which is typically a transfer line. The liquid level, as it relates to flammability, is a key element in the time to LFL (CLFL for Tank 50)

calculations, and thus, the flammability classification determination of the waste tanks (Rapid Generation Tank, Slow Generation Tank, Very Slow Generation Tank). The Flammability Control Program determines and tracks the time to LFL (CLFL for Tank 50) in each waste storage tank. Structural integrity fill limits are applied to the older tanks to prevent rupture at the highest stress locations (i.e., the knuckle region) and those tanks with identified cracks (limit the stress load that could cause unstable ductile tearing at the crack tips). For waste tanks that do not have an operating waste tank mixing device or waste tank mixing device operation in a waste tank containing only slurried sludge and the specific waste tank mixing device has been operated within (less than or equal to) 180 days, waste tank fill limits (maximum fill limit per Table 3.4-2) protect the vapor space volume to ensure flammable transients do not pose a safety concern. Other waste tank level limitations for protection of flammable transients are performed by the Gas Release Program (see Section 5.5.4.2.29) and are not part of the criteria for HLLCP setpoint determination.

For each waste tank, the most restrictive of the aforementioned levels is chosen as the liquid fill limit and the tank HLLCP shall be positioned appropriately (accounting for the 15,000 gallon transfer error [excluding Type I/II Non-Acidic Chemical Cleaning Waste Tanks] and adjusting for instrument uncertainty). The tank HLLCP is positioned at a fixed level. When the HLLCP detects that the liquid level has risen to this fixed level, an alarm signal is sent to the control room.

Upon receipt of an HLLCP alarm, the following actions shall be taken:

1. Immediately stop liquid additions into the tank (except for Contingency Transfer System transfers and those liquid additions needed to place the tank in a safe condition).

2. Immediately stop waste tank mixing devices in the affected tank.

3. Immediately stop transfer pumps associated with waste tank recirculation in the affected tank.

Similar immediate actions are required in the event the tank level instrumentation is inoperable. In the event that only the redundancy of the control room alarm is lost (for waste storage tanks that have two control room alarms associated with the HLLCP), latitude may be given to the completion times. The time to complete the actions should allow the operators ample time to restore the equipment to operable status, but sufficiently limiting to not create an unacceptable risk of the remaining alarm also becoming inoperable. Immediate responses for these actions are warranted because of their potential to reduce the vapor space volume and time to LFL (CLFL for Tank 50). The limited liquid additions allowed by Action 1 are typically of small volumes. Although introduction of this liquid to the waste tank will cause a minor increase in tank level, the increase in risk associated with these small additions is considered acceptable considering the potential benefits achieved by the additions (e.g., restoring ability to transfer liquid out of the tank, restoring normal ventilation on the tank, restoring ability to monitor liquid level). Contingency Transfer System transfers are also allowed to continue or start (Action 1) to ensure that transfers necessary to support emptying an affected waste tank annulus are not prohibited. Contingency Transfer System transfers are transfers of waste from the annulus of a leaking waste

tank back to the primary side of the same waste tank using the Contingency Transfer System, and these transfers do not reduce waste tank vapor space volume and cannot cause a waste tank overflow event.

In addition to the immediate actions discussed above, actions shall also be taken in response to a high level condition to verify that affected tank has a time to LFL (CLFL for Tank 50) greater than or equal to seven days. This action ensures that the ventilation flow requirements of LCO 3.8.1 remain valid. Because of the ventilation flow requirements of LCO 3.8.1 and the requirement of the Flammability Control Program (ensures at least seven days to LFL [CLFL for Tank 50] upon loss of ventilation), immediate actions are not required. However, because of the reduction in vapor space volume, the completion time shall be sufficiently limiting to allow for the fact that seven days may not be available. If it is determined that seven days to LFL is not available, appropriate actions shall be initiated to ensure that the hydrogen concentration (excluding Tank 50) in the vapor space remains less than the LFL. If it is determined that seven days to CLFL is not available for Tank 50, waste temperature monitoring shall be performed.

In addition to the immediate actions discussed above, actions shall be taken in response to an inoperable HLLCP to verify that the tank level is less than the fill limit. The initial verification shall be sufficiently limiting, considering the loop test surveillance frequency, to ensure that time is available to complete the actions associated with a high level condition discussed previously. Verification that the level is less than the TSR limit shall continue on a frequent basis until the credited HLLCP is operable.

5.5.2.4.1 INSTRUMENT LOOP TEST OF HIGH LIQUID-LEVEL CONDUCTIVITY PROBE (SURVEILLANCE REQUIREMENT 4.8.4.1)

Performing an instrument loop test on the required HLLCP ensures that the instrumentation is operable and capable of alarming upon receiving a signal from the required conductivity probes. The HLLCP shall not be considered inoperable during the performance of this SR. The loop test is a simple activity of short duration. This approach is considered acceptable since it is unlikely that a significant tank level increase would occur during the HLLCP loop test. This SR shall be performed on a routine basis to ensure that the HLLCP is maintained in an operable state. This SR also ensures requirements for fiber optic cable analysis (Ref. 80) are met and the surveillance frequency shall be within the loop failure probability analysis (Ref. 50, 82) for alarm loops that utilize fiber optic cable.

5.5.2.4.2 VERIFICATION OF WASTE STORAGE TANK HIGH LIQUID-LEVEL CONDUCTIVITY PROBE HEIGHT (SURVEILLANCE REQUIREMENT 4.8.4.2)

The waste storage tank HLLCP setpoint ensures that the waste tank liquid volume is within analyzed limits. Therefore, the HLLCPs shall be verified to be set at, or below, the fill limit (including uncertainty). The frequency of this surveillance shall be based on operational experience and engineering judgment and considered adequate to monitor adverse trends in instrumentation performance.

5.5.2.5 Annulus Level/Ventilation (Limiting Condition for Operation 3.8.5)

Chapter 3 credits the waste storage tank annulus fill level for protecting the initial hydrogen concentration used in the Waste Tank Annulus Explosion scenario (Section 3.4.2.12). This LCO is not applicable to Tank 50 as Chapter 3 does not credit annulus level protection for Tank 50. This LCO is not applicable to waste tanks in Acidic Chemical Cleaning Mode (requirements for these tanks are discussed in LCO 3.8.18). The top of the ductwork in the Type I and Type II annuli (21 inches and 23 inches, respectively) is the initial annulus level. If a bounding hydrogen generation rate for sludge is used, equilibrium hydrogen concentration in the annulus vapor space would exceed 25% of the LFL. In order to maintain the initial 25% of the LFL used in the annulus explosion calculation, a lower inhalation dose potential (lower hydrogen generation rate) and periodic ventilation system operation are required.

From Chapter 3, the annulus ventilation and annulus level monitoring requirements depend on the Mode status of the tank. This LCO states the annulus ventilation and annulus level monitoring requirements that are associated with Gas Release, Operation, and Non-Acidic Chemical Cleaning Modes. The annulus ventilation and annulus level monitoring requirements for Acidic Chemical Cleaning Mode are discussed in LCO 3.8.18.

This LCO requires that the annulus fill level be less than or equal to the residual volume as provided in Table 3.4-3 for each waste tank type and that forced ventilation be operated (Type I and II tanks) on a sufficient basis and duration to maintain the annulus vapor space hydrogen concentration less than or equal to 25% of the LFL. This LCO also requires that annulus leak detection instrumentation (outer annulus conductivity probe and control room alarm) be operable when needed to monitor the annulus level (Ref. 42). The leak detection instrumentation is performing its intended function when liquid in the tank annulus can be identified to the control room such that appropriate actions can be taken. Time delay relays (less than or equal to 60 seconds) are permitted on the alarm actuation circuits. The control room alarm for the annulus conductivity probes must provide both audible and visual indications of the alarm condition. Satisfactory placement of the credited conductivity probe is a requirement for the establishment of leak detection instrumentation operability. This LCO is required for Type I, II, III, and IIIA tanks (excluding Tank 50) during Gas Release or Operation Modes, and for Type I and II tanks during Non-Acidic Chemical Cleaning Mode. Note that the lower hydrogen generation rate for the Type I and Type II tanks is controlled via the Hydrogen Generation Rate Control AC.

In the event that the waste level in the annulus is discovered to be greater than the volume provided in Table 3.4-3 or the forced ventilation has not operated as required on a Type I or Type II annulus, actions shall be taken to immediately stop Waste Transfers through the affected annulus (except for transfers from the annulus) and to ensure that the affected annulus is receiving forced ventilation flow (installed or portable) prior to reaching flammable conditions (100% of the LFL). The ventilation requirements when jetting tank annuli contents is governed by an AC (Transfers From Waste Tank Annuli Program). Allowing transfers from the annulus to continue or start is intended to ensure that transfers necessary to support emptying an affected waste tank annulus are not prohibited. These transfers have minimal impact on additional hydrogen release from the waste in the annulus.

As part of restoring the level within the values of Table 3.4-3, continuous purge shall be supplied to the affected tank annulus for a sufficient duration to perform the necessary number of vapor space turnovers to "reset" the vapor space hydrogen concentration to the conditions used in the residual analysis. For Type III/IIIA annuli, the residual analysis does not have an initial condition for flammable vapor concentration, but merely indicates that an equilibrium hydrogen concentration of 25% of the LFL occurs at the residual waste volume (Ref. 98). For Type I/II annuli, the residual analysis uses an initial flammable vapor concentration of less than or equal to 7% of the LFL (Ref. 99). From Reference 17, the number of vapor space turnovers required to "reset" the vapor space to the conditions used in the safety analysis is 12 (for all waste tank types), assuming the following:

- For Type III/IIIA annuli, 12 vapor space turnovers will reduce hydrogen concentration from 100% to 25% assuming a mixing efficiency of 0.2. This mixing efficiency is based on the recommended value from NFPA 69 (Ref. 97) Annex D for the ventilation system arrangement (single exhaust opening, non-positive supply ventilation system).
- For Type I/II annuli, 12 vapor space turnovers will reduce hydrogen concentration from 100% to 7% assuming a mixing efficiency of 0.25. This mixing efficiency is based on the recommended value (conservatively reduced) from NFPA 69 (Ref. 97) Annex D for the ventilation system arrangement (single exhaust opening, positive supply ventilation system).

In the event that the annulus leak detection instrumentation is inoperable when needed to monitor annulus level, actions shall be taken to verify that the waste level is less than or equal to the volumes provided in Table 3.4-3. This action shall be completed prior to reaching flammable conditions within the annulus (100% of the LFL).

5.5.2.5.1 VERIFICATION OF ANNULUS LEVEL (SURVEILLANCE REQUIREMENT 4.8.5.1)

The annulus level ensures that the initial hydrogen concentration is within the analyzed value. Since this LCO requires a maximum level for the waste tank annuli, verification on a routine basis is required. Additionally, this SR is used to protect the assumption that primary tank leakage into the annulus is identified soon enough to ensure mitigative actions are taken prior to the annulus reaching 100% of the LFL. This detection is not needed for the seismic initiated leakage scenario since the seismic event itself initiates action to check the annulus and take mitigative actions. An operable annulus conductivity probe shall be used to perform this SR.

The unmitigated scenario in Section 3.4.2.12 assumed a primary tank leak was detected by the time the leaked waste reached the "residual" level, then the leak continued at the same rate for 10 more days. The 10 days was chosen to conservatively cover initiators of leakage into the annulus, including a seismic event. For the non-seismic initiated primary tank leak, responding to a leaking tank, once detected in the annulus, would be much shorter. Using the assumptions in Section 3.4.2.12, the vapor space in the annulus for the non-seismic initiated primary tank leak scenario was only ~60% LFL (Ref. 39). For the Type III and IIIA tanks, the residual level is reached in approximately four days (assuming an empty annulus and a maximum non-seismic

leak rate of 0.4 gpm). However, Type III and IIIA tanks have never leaked, have no known leak sites, were constructed using post-weld heat treatment, and are maintained by the Corrosion Control and Structural Integrity Programs. The 0.4 gpm was conservatively used in the unmitigated calculation for convenience to be consistent with the analysis for Type I and II tanks. However, the 0.4 gpm is very conservative for Type III/IIIA tanks. For the Type I and II tanks, the residual levels are reached in approximately fourteen days (assuming an empty annulus and a maximum non-seismic leak rate of 0.4 gpm). The Corrosion Control and Structural Integrity Programs also cover these tanks, but some are known to contain various leak sites. Finally, there are uncredited features in place most of the time to detect primary tank leakage into the annulus other than the periodic verifications dictated by this SR (e.g., annulus level dip tubes, annulus exhaust ventilation Continuous Air Monitors, reel tapes/radar measuring primary tank level).

Based on the considerations above, a 7-day surveillance frequency is more than adequate to detect primary tank leakage in sufficient time to ensure mitigative actions are taken prior to the annulus reaching 100% of the LFL.

5.5.2.5.2 TYPE I AND TYPE II ANNULUS VENTILATION OPERATION (SURVEILLANCE REQUIREMENT 4.8.5.2)

Because annulus ventilation is required in conjunction with annulus level in the Type I and II tanks, operation on a periodic basis is required. This surveillance is met by operating the annulus ventilation for a sufficient duration to achieve 12 vapor space turnovers. The frequency of the surveillance shall be sufficient to ensure that even in the case that an annulus is filled to the allowed level with waste, that the peak hydrogen concentration in the annulus will not exceed 25% of the LFL. The hydrogen generation rates for the Type I and Type II tanks are protected by an AC (Hydrogen Generation Rate Control).

5.5.2.5.3 INSTRUMENT LOOP TEST OF ANNULUS CONDUCTIVITY PROBE (SURVEILLANCE REQUIREMENT 4.8.5.3)

Performance of an instrument loop test on each required conductivity probe ensures that the instruments are capable of detecting a high level condition and annunciating in the applicable control room. The instrument loop test verifies the operability of the entire instrument loop (e.g., conductivity probe and associated circuitry and control room alarms) with the exception of a limited portion of the common return path encompassing the grounding scheme. This SR shall be performed on a routine basis to ensure that the conductivity probes are maintained for use in performing SR 4.8.5.1. This SR also ensures requirements for fiber optic cable analysis (Ref. 80) are met and the surveillance frequency shall be within the loop failure probability analysis (Ref. 51, 81) for alarm loops that utilize fiber optic cable.

5.5.2.5.4 VERIFICATION OF ANNULUS CONDUCTIVITY PROBE HEIGHT (SURVEILLANCE REQUIREMENT 4.8.5.4)

The annulus conductivity probe setpoint ensures that the annulus volume is within analyzed limits. Therefore, the annulus conductivity probe shall be verified to be set at, or below, the residual height given in Table 3.4-3 (including uncertainty). The frequency of this surveillance

shall be based on operational experience and engineering judgment and considered adequate to monitor adverse trends in instrumentation performance.

5.5.2.6 Annulus Leak Detection Instruments (Limiting Condition for Operation 3.8.6)

Chapter 3 credits the Type III and IIIA waste storage tank (excluding Tank 50) annulus conductivity probes for mitigation of a Transfer Error event (waste tank annulus spill) as discussed in Section 3.4.2.9. This LCO is not applicable to Tank 50 as Chapter 3 does not credit annulus level protection for Tank 50. Therefore, this LCO requires that at least one outer annulus conductivity probe and associated control room alarm be operable with a setpoint less than or equal to the volume as provided in Table 3.4-3. The leak detection instrumentation is performing its intended function when liquid in the tank annulus can be identified to the control room such that appropriate actions can be taken. Time delay relays (less than or equal to 60 seconds) are permitted on the alarm actuation circuits. The control room alarm for the annulus conductivity probes must provide both audible and visual indications of the alarm condition. Satisfactory placement of the credited conductivity probe is a requirement for the establishment of leak detection instrumentation operability. This LCO is required for Type III and IIIA Waste Tanks (excluding Tank 50) during Gas Release or Operation Mode when the transfer line through the annulus is in High-Rem Transfer Mode.

Chapter 3 credits the conductivity probe and alarm with alerting operators to an unacceptable annulus level during High-Rem Waste Transfers. In the event that the leak detection instrumentation is inoperable, actions shall be taken to terminate Waste Transfers through the affected annulus (except for transfers from the annulus) and verify that the waste level in annulus is below that specified in LCO 3.8.5 (residual volume). Immediately terminating Waste Transfers ensures that the leak outside of the primary containment is within the analyzed values for the Transfer Error events described in Chapter 3 (i.e., 30-minute response time for terminating the transfer). Once the transfer is terminated, verifying the annulus level is essential for determining whether the actions of LCO 3.8.5 are applicable. Allowing transfers from the annulus to continue or start is intended to ensure that transfers necessary to support emptying an affected waste tank annulus are not prohibited. These transfers have minimal impact on additional hydrogen release from the waste in the annulus.

5.5.2.6.1 INSTRUMENT LOOP TEST OF ANNULUS CONDUCTIVITY PROBE (SURVEILLANCE REQUIREMENT 4.8.6.1)

Performance of an instrument loop test on each required conductivity probe ensures that the instruments are capable of detecting a high level condition and annunciating in the applicable control room. The instrument loop test verifies the operability of the entire instrument loop (e.g., conductivity probe and associated circuitry and control room alarms) with the exception of a limited portion of the common return path encompassing the grounding scheme. This SR shall be performed on a routine basis to ensure that the conductivity probes are available to detect a release. This SR also ensures requirements for fiber optic cable analysis (Ref. 80) are met and the surveillance frequency shall be within the loop failure probability analysis (Ref. 51, 81) for alarm loops that utilize fiber optic cable.

5.5.2.6.2 VERIFICATION OF ANNULUS CONDUCTIVITY PROBE HEIGHT (SURVEILLANCE REQUIREMENT 4.8.6.2)

The annulus conductivity probe setpoint ensures that transfer errors within an annulus do not lead to consequences exceeding the EGs. Therefore, conductivity probes are verified to be set at or below the maximum calculated level setpoints (including uncertainty). The frequency of this surveillance shall be based on operational experience and engineering judgment and considered adequate to monitor adverse trends in instrumentation performance.

5.5.2.7 Chromate Cooling Water Siphon Breakers (Limiting Condition for Operation 3.8.7)

Chapter 3 credits siphon breakers for preventing a siphon/pump out event for Waste Tanks 13, 14 (when connected to the CRW System), 15 (when connected to the CRW System), 29, 30, 31, 32, 33, 34, and 35. The siphon breakers for Tanks 13, 14, 15, 29, 30, 31, 32, and 35 are SC. The siphon breakers for Tanks 33 and 34 are SS. Siphon breakers on the Chromate Cooling Water (CRW) supply and return distribution headers are credited with performing this safety function. Therefore, this LCO requires that two supply header CRW siphon breakers be operable for Tanks 13, 14 (when connected to the CRW System), 15 (when connected to the CRW System), 29, 30, 31, 32, and 35, and one for Tanks 33 and 34; and that they be aligned to the associated CRW System supply distribution header (Tanks 29, 31, and 32). This LCO also requires that two return header CRW siphon breakers be operable (Tanks 13, 14 [when connected to the CRW System], 15 [when connected to the CRW System], 29, 30, 31, 32, and 35) and one for Tanks 33 and 34; and that they be aligned to the associated CRW System return distribution header (Tanks 29, 31, 32). Tanks 13, 14, 15, 30, 33, 34, and 35 do not require the siphon breakers to be aligned to the supply and return distribution headers. This is because the siphon breakers are either tied directly to the CRW headers for the individual tank (Tanks 30 and 35) or the siphon breakers are tied directly to the CRW distribution headers (Tanks 13, 14, 15, 33, and 34). Isolating the CRW supply and return headers from the CRW System distribution headers for these tanks does not prevent the siphon breakers from performing their credited function. In order for a siphon breaker to be operable, this LCO requires that the siphon breaker(s) actuates upon decreasing pressure before the local pressure falls below –0.5 pounds per square inch gauge (psig). This ensures that air will be vented into the system before the CRW System pressure at the elevation of the concrete tank top falls below atmospheric and that the siphon breaker(s) will prevent a partial vacuum from developing in the CRW System at any location below the elevation of the concrete tank top.

The common CRW supply header and return header for Tanks 13, 14, and 15 each contain two siphon breakers used to eliminate any siphon/pump-out potential. However, CRW supply and return to the cooling coils for Tank 14 and Tank 15 are not permanently connected and are blanked or physically disconnected when not in use, eliminating any siphon/pump-out potential. The CRW System is connected when operational plans require cooling for Tank 14 or Tank 15. When Tank 14 or Tank 15 is aligned to the common supply and return headers, the installed siphon breakers are credited to eliminate the siphon/pump-out potential from the tank. Therefore, the requirements of this LCO only apply to Tank 14 or Tank 15 when the applicable tank is connected to the CRW System.

This LCO is required during Gas Release, Operation, Acidic Chemical Cleaning, or Non-Acidic Chemical Cleaning Mode, except when vent path(s) exist that are sufficient to prevent siphons through the supply and return headers. From Reference 41, vent paths with a total flow opening size of 0.63 square inches (equivalent to 80% of the four 1/2-inch holes on the vent lines for the Tank 30 siphon breakers) are sufficient to prevent siphons.

If one or more of the CRW siphon breakers are intentionally isolated from the supply or return headers, the Pump House CRW surge tank level shall be monitored to ensure the safety function for this event is maintained. The monitoring of the surge tank level shall be of a sufficient frequency such that a siphon/pump out event can be detected (loss of surge tank level) and terminated prior to any significant release occurring. Because this situation is relying on operator detection/action (versus engineered design feature), the amount of time that the breakers are intentionally isolated from the CRW header(s) shall be minimized.

If one of the required SC siphon breakers is inoperable, action shall be taken to restore the inoperable siphon breaker to operable status. The time to complete this action shall allow the operators sufficient time to restore operability, but shall be sufficiently limiting to not create an unacceptable risk of the other SC CRW header siphon breaker also becoming inoperable.

In the event that a credited SS or both SC CRW supply header siphon breakers are inoperable (or not aligned to the distribution header in the case of Tanks 29, 31, and 32), actions shall be taken to immediately isolate cooling coils in the affected tank(s) from the CRW supply header. An immediate response time is required in order to minimize the time at risk with inoperable siphon breaker(s). Note that actions associated with breakers that are inoperable due to intentional isolation, fall under guidance previously stated above. If an operable siphon breaker can be aligned to the CRW System supply header (and aligned to the distribution header in the case of Tanks 29, 31, and 32) immediately, consideration may be given to not isolate the cooling coils in the affected tank from the CRW System supply header.

Similar actions and completion times are applicable should the same condition exist for the credited return header breakers.

5.5.2.7.1 SIPHON BREAKERS VERIFICATION (SURVEILLANCE REQUIREMENTS 4.8.7.1 AND 4.8.7.2)

The siphon breaker(s) isolation valves shall be verified to be open. This surveillance ensures that siphon breakers that are inoperable due to inadvertent isolation from the associated header are detected (Note that this surveillance is not required for a CRW siphon breaker that is intentionally isolated from the header). In addition, for Tanks 29, 31, and 32, the siphon breakers shall be verified to be aligned to the supply and return CRW distribution headers. This surveillance ensures that siphon breakers are available for Tanks 29, 31, and 32. This surveillance frequency shall be based on operational experience and engineering judgment and considered adequate to ensure that the siphon breakers can perform their intended safety function.

5.5.2.7.2 SIPHON BREAKERS INSPECTION (SURVEILLANCE REQUIREMENT 4.8.7.3)

Each siphon breaker vent path shall be inspected for blockage. The surveillance frequency shall be sufficient to ensure that no obstructions or foreign materials are present in and around the vent holes near the top of the siphon breaker. If minor obstructions or foreign material are present around the vent holes, this surveillance may still be considered performed satisfactory if an engineering evaluation indicates that the total flow opening of the vent holes is at least 0.63 square inches. Significant blockage of these vent holes would make the siphon breaker(s) inoperable by preventing air from being admitted into the system to break a siphon following the loss of system pressure.

5.5.2.7.3 SIPHON BREAKERS ACTUATION (SURVEILLANCE REQUIREMENT 4.8.7.4)

The siphon breakers shall be verified to actuate when the pressure at the component is greater than or equal to –0.5 psig. This surveillance may be performed through a bench test or by an in-place test of each individual siphon breaker, which shows that the siphon breaker will actuate when the pressure at the inlet of the siphon breaker is greater than or equal to -0.5 psig. The surveillance frequency shall be sufficient to provide reasonable assurance that the siphon breaker(s) can perform its design function.

5.5.2.8 Deleted

5.5.2.9 <u>Waste Tank Purge Ventilation System – Gas Release (Limiting Condition for Operation 3.8.9)</u>

The safety analysis credits the waste storage tank ventilation (in conjunction with the Gas Release Program) on waste storage tanks (excluding Tank 50) undergoing activities (sludge agitation, bulk saltcake dissolution, and saltcake interstitial liquid removal) that exceed the Gas Release Criteria to prevent Waste Tank Explosion events. Additionally, the safety analysis credits waste storage tank ventilation to mitigate airborne releases for the Waste Tank Overheating event and Aerosolization Events.

Chapter 3 defines the Gas Release Criteria (Section 3.4.2.11) and the potential release quantity is determined by engineering evaluation per the Gas Release Program (Section 5.5.4.2.29). Waste Tank 50 is prohibited from performing operations that could require Gas Release Mode (i.e., sludge agitation, bulk saltcake dissolution, and saltcake interstitial liquid removal activities that allow the vapor space to exceed the Gas Release Criteria stated in Chapter 3). Therefore Tank 50 is excluded from this LCO.

The Waste Tank Purge Ventilation System is credited with the following safety functions (for waste tanks applicable to this Mode):

- For activities (sludge agitation, bulk saltcake dissolution, and saltcake interstitial liquid removal) that exceed the Gas Release Criteria, provides sufficient purge flow rate through the tank (in conjunction with the Gas Release Program) to maintain the

waste tank bulk vapor space hydrogen concentration less than or equal to the safety analysis value and maintain the minimum time to LFL defined by the waste tank flammability classification.

- During free supernate removal activities on Rapid Generation Tanks and Slow Generation Tanks (in conjunction with the Gas Release Program), maintains the minimum time to LFL defined by the waste tank flammability classification (and associated minimum ventilation flow rate requirements).
- Provides an active filtered release path to minimize the release of entrained waste from Waste Tank Overheating and Aerosolization Events (during waste tank mixing device or transfer jet operations).

To satisfy the flammability safety function of the ventilation system, a minimum ventilation flow rate is required. As defined in Chapter 3 the minimum ventilation flow rate shall be 72 scfm (188 scfm for Tanks 40 and 51), regardless of waste tank flammability classification, to minimize the potential for reaching a flammable vapor concentration. These values (72 and 188 scfm), in conjunction with the Gas Release Program, will maintain the waste tank bulk vapor space hydrogen concentration less than or equal to the safety analysis value and maintain the minimum time to LFL defined by the waste tank flammability classification. The Gas Release Program supplements the ventilation system as the purge flow rates may not be sufficient to limit the waste tank flammable vapor concentration to below assumed values for trapped gas releases. Thus, the Gas Release Program addresses this vulnerability by controlling the activity to limit the amount of trapped gas released (based on the minimum ventilation flow rate requirements). As discussed in Section 5.5.2.1, the TSRs do not distinguish separate flow rate values between Tanks 40 and 51 when classified as Rapid Generation Tanks or ESP Sludge Slurry Waste Tanks. Similarly, LCO 3.8.9 provides only a single flow value (188 scfm) for Tanks 40 and 51.

For free supernate removal activities on Rapid Generation Tanks and Slow Generation Tanks, the ventilation system (and associated minimum ventilation flow rate requirements discussed above) in conjunction with the Gas Release Program ensures that free supernate removal activities will be within hydrogen release rate limits to maintain the minimum time to LFL defined by the waste tank flammability classification.

Based on the discussion above, this LCO requires that the Waste Tank Purge Ventilation System be operable and delivering a flow rate of at least 72 scfm (188 scfm for Tanks 40 and 51) as well as a filtered release path. The LCO value will be based on the safety analysis value (72 or 188 scfm) adjusted for instrument uncertainty. In addition, because of the permitted activities in the Gas Release Mode, flow indication and low flow interlocks are required to be operable.

Depending on the activity being performed, the interlock will perform the following when low ventilation flow or failure of instrument loop control power occurs:

- stop waste tank mixing devices (tanks undergoing sludge agitation or bulk saltcake dissolution using waste tank mixing devices)

- stop transfer pumps associated with waste tank recirculation (tanks undergoing bulk saltcake dissolution using transfer pumps associated with waste tank recirculation)
- close the dissolution liquid addition valves (tanks undergoing bulk saltcake dissolution)
- stop transfer pumps associated with saltcake interstitial liquid removal (tanks undergoing saltcake interstitial liquid removal)

Time delay relays (less than or equal to 15 seconds) are permitted on the interlock actuation circuits. Also to be operable, the Waste Tank Purge Ventilation Systems require an operating fan generating the required purge flow through the system, an intact flow path (e.g., ductwork, filter housing, reheater shell) from the waste tank to the fan (or to the exhaust flow indicator if located downstream of the fan), and an online exhaust HEPA filter capable of removing radioactive particulate from the exhaust stream.

This LCO is required for tanks in the Gas Release Mode (see LCO 3.8.1 for Operation and Non-Acidic Chemical Cleaning Modes or LCO 3.8.15 for Acidic Chemical Cleaning Mode).

In order for the Waste Tank Purge Ventilation System to be operable, this LCO also requires an online exhaust HEPA filter capable of removing radioactive particulate from the exhaust stream. If an exhaust HEPA filter is inoperable and an operable HEPA filter is installed in the system and can be placed on line, immediate action shall be taken to place an operable exhaust HEPA filter in service and remove the inoperable HEPA filter from service. This action allows shifting to an operable standby filter, when available in the system, and is not applicable to ventilation systems with only one installed HEPA filter or that require both exhaust HEPA filters.

In the event the exhaust flow is less than 72 scfm (188 scfm for Tanks 40 and 51), the ventilation system is inoperable, or the flow indicator/interlock is inoperable, the actions listed below shall be taken. The completion times stated below are for a loss of both “instrument trains.” In the event that only the redundancy is lost, latitude may be given to the completion times below. The time to complete the actions should allow the operators ample time to restore the equipment to operable status, but sufficiently limiting to not create an unacceptable risk of the remaining component also becoming inoperable.

1. Immediately stop liquid additions into the affected tank (except for those liquid additions needed to place the tank in a safe condition),

2. Immediately stop Waste Transfers out of the affected tank,

3. Immediately stop waste tank mixing devices in the affected tank (should be performed by interlock actuation),

4. Immediately stop transfer pumps associated with waste tank recirculation in the affected tank (should be performed by interlock actuation),

5. Immediately isolate steam/air to the transfer jet in the affected tank, and

6. Ensure forced ventilation is operating on the affected tank.

The need for the immediate completion time for Actions 1, 2, 3, and 4 above are warranted because these activities directly affect the release rate of hydrogen (dissolved and trapped) as well as reducing the bulk vapor space (impacts time to LFL). The limited liquid additions allowed by Action 1 are typically of small volumes. Although introduction of this liquid to the waste tank will cause a minor increase in tank level, the increase in risk associated with these small additions is considered acceptable considering the potential benefits achieved by the additions (e.g., restoring ability to transfer liquid out of the tank, restoring normal ventilation on the tank, restoring ability to monitor liquid level). Immediately isolating steam/air to the transfer jet (Action 5 above) is required due to the nature of the potential release (aerosolization of waste or airborne release due to potential steam heating of the waste tank). A normal air blow (nominal range of 5 to 30 minutes) shall be permitted following jet operation. This post-operation air blow is intended to prevent suckbacks and/or siphons by purging the steam from the jet supply piping and does not have a significant impact on the analyzed aerosolization or waste tank overheating accident progressions. The control that prevents an aerosolization event (piping integrity) is not impacted by the normal air blow. In addition, the Process Area confinement and installed HEPA filter will provide some mitigation in the event piping integrity was degraded.

An immediate completion time is not required for Action 6 above because of the Administrative Controls that protect a minimum time to LFL. The Flammability Control Program, Waste Tank Quiescent Time Program, and Gas Release Program ensure the waste tanks are controlled so that a minimum of seven days are available for the tank vapor space to reach 100% of the LFL. Therefore, forced ventilation shall be provided (Action 6) within seven days.

5.5.2.9.1 TANK VENTILATION FLOW VERIFICATION (SURVEILLANCE REQUIREMENT 4.8.9.1)

Since LCO 3.8.9 requires a minimum waste tank ventilation flow rate (72 or 188 scfm), verification on a routine basis is required. This surveillance is met by reading and recording the measured flow rate of the credited flow indication instrument. The frequency of the surveillance shall ensure there is adequate time to respond to a loss of tank vapor space purge flow.

5.5.2.9.2 INSTRUMENT LOOP TEST ON EXHAUST LOW FLOW INTERLOCK (SURVEILLANCE REQUIREMENT 4.8.9.2)

This loop test shall verify that the interlock function is operable and that the installed instrumentation responds as required when compared with a known standard. The surveillance frequency shall be based on operational experience and engineering judgment and considered adequate to monitor adverse trends in instrumentation performance and decrease the probability of equipment failure.

5.5.2.9.3 VERIFICATION OF DISSOLUTION LIQUID ADDITION VALVE CLOSURE (SURVEILLANCE REQUIREMENT 4.8.9.3)

The dissolution liquid addition valves are required to close when commanded by hardwired interlocks, which actuate on low exhaust flow. These interlocks are required by the safety analysis to prevent exceeding flammable concentrations in the tank vapor space. The safety analysis requires the isolation valves to perform their required functions. Due to the relatively slow nature of the gas release and the volume of liquid required to liberate significant quantities of trapped gas, verification that the valve closes when commanded (without a specified minimum closure time or leak rate verification) is adequate to meet the intent of this SR.

These valves, therefore, will be tested to ensure that they close on command (i.e., when directed by a signal). This test shall verify that the valves will perform this safety function when required.

The surveillance frequency shall be based on operational experience and engineering judgment and considered adequate to monitor adverse trends in instrumentation performance and decrease the probability of equipment failure.

5.5.2.9.4 VERIFICATION OF WASTE TANK MIXING DEVICE MOTOR AND WASTE TANK TRANSFER PUMP MOTOR RESPONSE (SURVEILLANCE REQUIREMENTS 4.8.9.4, 4.8.9.7, AND 4.8.9.9)

The waste tank mixing device motors and waste tank transfer pump motors (transfer pumps associated with waste tank recirculation and saltcake interstitial liquid removal) are required to de-energize when commanded by hardwired interlocks, which actuate on low exhaust flow. This function is required by the safety analysis to prevent exceeding flammable concentrations in the tank vapor space. This function, therefore, will be tested to ensure that the motors de-energize on command (i.e., when directed by a signal).

The surveillance frequency shall be based on operational experience and engineering judgment and considered adequate to monitor adverse trends in instrumentation performance and decrease the probability of equipment failure.

5.5.2.9.5 INSTRUMENT LOOP CALIBRATION OF EXHAUST FLOW INDICATOR (SURVEILLANCE REQUIREMENT 4.8.9.5)

The installed ventilation flow indication is required to be operable on tanks in Gas Release Mode. This SR ensures calibration of the credited flow indicator and that the associated instrumentation reads within the calculated uncertainty. The surveillance frequency shall be within the time documented in the uncertainty analysis to ensure that the installed flow indicator can perform its intended safety function.

5.5.2.9.6 HIGH-EFFICIENCY PARTICULATE AIR FILTER PERFORMANCE TEST (SURVEILLANCE REQUIREMENT 4.8.9.6)

A minimum HEPA filter efficiency of 99.5% bounds the various values used in the analyses (see Section 3.4.1.5.2). Therefore, initial and periodic HEPA filter performance testing (i.e., PAO test or equivalent) shall be performed to ensure an efficiency of 99.5% or better. The surveillance frequency shall be based on the guidance provided in References 19 and 20.

The ventilation system shall be operating at a normal flow rate for the system during the performance test of the HEPA filter. This ensures that the test is performed under the same conditions as the system is expected to operate. Verification of normal flow can be based on having the exhaust fan operating with the system aligned to ventilate the waste tank, and indication of normal system flow (e.g., installed equipment such as flow indicator, tank vacuum, component differential pressures, as applicable, reading within normal limits). This is consistent with the Nuclear Air Cleaning Handbook (Ref. 62), which states that the in-place test is performed at operational airflow.

Tank ventilation systems typically operate near the nominal system flow rate. Variations in ventilation system flow rate will occur normally over time. These variations can occur due to filter loading, changes in ventilation system conditions (such as demister fouling), and position of dampers. Typically, such variations are small relative to the nominal system flow.

HEPA filters capture particles by three basic mechanisms, inertial impaction, Brownian motion, and interception. Two of these mechanisms, inertial impaction and Brownian motion, are affected by flow rate. The efficiency for inertial impaction increases as flow rate increases, while the efficiency due to Brownian motion increases as flow rate decreases. The net effect of these two mechanisms is to maintain overall efficiency relatively constant over a wide range of flows. Therefore, normal variations in flow do not affect the results of the in-place performance test (Ref. 62).

5.5.2.10 <u>Hydrogen Monitoring – Gas Release (Limiting Condition for Operation 3.8.10)</u>

Chapter 3 credits waste storage tank hydrogen monitoring for Rapid Generation Tanks and Slow Generation Tanks and waste tanks in the Gas Release Mode (excluding Tank 50). The hydrogen monitoring provides additional validation of the effectiveness of the credited waste tank ventilation (LCO 3.8.9). From Chapter 3, the extent of the waste tank hydrogen monitoring and the equipment required to be operable depends on the flammability classification of the tank (Rapid Generation Tank/Slow Generation Tank) and the Mode status of the tank (Gas Release/Operation/Acidic Chemical Cleaning/Non-Acidic Chemical Cleaning).

This LCO states the waste tank hydrogen monitoring requirements associated with tanks in the Gas Release Mode. The hydrogen monitoring requirements for tanks under a different flammability classification/Mode (excluding Tank 50) are discussed in separate LCOs (see LCOs 3.8.2, 3.8.3, and 3.8.16).

The safety analysis credits hydrogen monitoring requirements on waste storage tanks (excluding Tank 50) undergoing activities (sludge agitation, bulk saltcake dissolution, and saltcake

interstitial liquid removal) that exceed the Gas Release Criteria. Chapter 3 defines the Gas Release Criteria (Section 3.4.2.11) and the potential release quantity is determined by engineering evaluation per the Gas Release Program (Section 5.5.4.2.29). Waste Tank 50 is prohibited from performing operations that could require Gas Release Mode (i.e., sludge agitation, bulk saltcake dissolution, and saltcake interstitial liquid removal activities that allow the vapor space to exceed the Gas Release Criteria). Therefore, Tank 50 is excluded from this LCO.

Chapter 3 credits waste storage tank continuous hydrogen monitoring (excluding Tank 50) to allow detection of a high hydrogen concentration and subsequent response (via interlocks). Therefore, this LCO requires that the waste tank vapor space hydrogen concentration be less than or equal to the safety analysis value defined by the Flammability Control Program. This LCO also requires an installed hydrogen monitor (including sample flow indicator) and a high hydrogen concentration interlock to be operable. Requiring the waste tank hydrogen monitor loop to be operable with an interlock setpoint of less than or equal to the safety analysis value defined by the Flammability Control Program ensures that an increase in hydrogen concentration can be rapidly detected and hydrogen generating activities are stopped. The LCO value for hydrogen concentration (determined by the Flammability Control Program) will be based on the safety analysis value, adjusted for potential organics and instrument uncertainty.

Depending on the activity being performed, the interlock will perform the following when high hydrogen concentration or failure of instrument loop control power occurs:

- stop waste tank mixing devices (tanks undergoing sludge agitation or bulk saltcake dissolution using waste tank mixing devices)
- stop transfer pumps associated with waste tank recirculation (tanks undergoing bulk saltcake dissolution using transfer pumps associated with waste tank recirculation)
- close the dissolution liquid addition valves (tanks undergoing bulk saltcake dissolution)
- stop transfer pumps associated with saltcake interstitial liquid removal (tanks undergoing saltcake interstitial liquid removal)

Time delay relays (less than or equal to 15 seconds) are permitted on the interlock actuation circuits.

Waste tank vapor space flammability monitoring, in conjunction with Administrative Controls, ensures that conditions causing excessive hydrogen concentration can be detected and actions taken in sufficient time to prevent a tank explosion. The Flammability Control Program, Waste Tank Quiescent Time Program, and Gas Release Program ensure the waste tanks are controlled so that a minimum of seven days are available for the tank vapor space to reach 100% of the LFL.

In the event that the waste tank vapor space hydrogen concentration is greater than the safety analysis value defined by the Flammability Control Program or the hydrogen monitor/interlock loop is inoperable, the actions listed below shall be taken:

1. Immediately stop liquid additions into the affected tank (except for those liquid additions needed to place the tank in a safe condition). This action is necessary to stop active mechanisms for releasing hydrogen and reducing tank vapor space.

2. Immediately stop Waste Transfers out of the affected tank. This action is necessary to stop active mechanisms for releasing hydrogen.

3. Immediately stop waste tank mixing devices in the affected tank (should be performed by interlock actuation). This action is necessary to stop active mechanisms for releasing hydrogen.

4. Immediately stop transfer pumps associated with waste tank recirculation in the affected tank (should be performed by interlock actuation). This action is necessary to stop active mechanisms for releasing hydrogen.

5. Ensure forced ventilation is operating on the affected tank. By significantly reducing the dissolved and trapped hydrogen release rates (Actions 1, 2, 3, and 4 above), forced ventilation will dilute the hydrogen to assure that the tank vapor space is effectively purged.

The limited liquid additions allowed by Action 1 are typically of small volumes. Although introduction of this liquid to the waste tank will cause a minor increase in tank level, the increase in risk associated with these small additions is considered acceptable considering the potential benefits achieved by the additions (e.g., restoring ability to transfer liquid out of the tank, restoring normal ventilation on the tank, restoring ability to monitor liquid level).

5.5.2.10.1 WASTE TANK HYDROGEN MONITOR SAMPLE FLOW VERIFICATION (SURVEILLANCE REQUIREMENT 4.8.10.2)

Verifying that the sample flow to the installed hydrogen monitor is within the range documented in the instrument uncertainty ensures that the sample flow path is unobstructed and that adequate sample flow is being provided to the hydrogen monitor. The sample flow is verified using the installed rotameter associated with the sample flow line at the hydrogen monitor.

The SR shall be met by reading the flow rate indicated by the installed rotameter and verifying that the sample flow rate is within the range documented in the instrument uncertainty analysis.

5.5.2.10.2 INSTRUMENT LOOP CHECK ON WASTE TANK HYDROGEN MONITOR (SURVEILLANCE REQUIREMENT 4.8.10.3)

This loop check is intended to detect a gross failure of the instrument between the calibrations of SR 4.8.10.4. The loop check shall verify that the hydrogen concentration measurement is consistent with a similar measurement from another instrument. Failure of the loop check shall

require declaring the instrumentation inoperable. The surveillance frequency shall be based on operational experience and engineering judgment and considered adequate to monitor adverse trends in instrumentation performance.

5.5.2.10.3 INSTRUMENT LOOP CALIBRATION ON WASTE TANK HYDROGEN MONITOR (SURVEILLANCE REQUIREMENT 4.8.10.4)

The installed hydrogen monitor is required to be operable. This SR ensures calibration of the credited hydrogen monitor and that the associated instrumentation reads within the calculated uncertainty by verifying that the hydrogen monitor responds, as required, when compared to a known standard. The surveillance frequency shall be based on the instrument uncertainty analysis and consistent with manufacturer's recommendations.

5.5.2.10.4 INSTRUMENT LOOP TEST ON THE HIGH HYDROGEN CONCENTRATION INTERLOCK (SURVEILLANCE REQUIREMENT 4.8.10.5)

This loop test shall verify that the interlock function is operable and that the installed instrumentation responds, as required, when compared with a known standard. The surveillance frequency shall be based on operational experience and engineering judgment and considered adequate to monitor adverse trends in instrumentation performance and decrease the probability of equipment failure.

5.5.2.10.5 VERIFICATION OF DISSOLUTION LIQUID ADDITION VALVE CLOSURE (SURVEILLANCE REQUIREMENT 4.8.10.6)

The dissolution liquid addition valve is required to close when commanded by hardwired interlock, which actuates on high hydrogen concentration. This interlock is required by the safety analysis to prevent exceeding flammable concentrations in the tank vapor space. The safety analysis requires the isolation valve to perform its required function. Due to the relatively slow nature of the gas release and the volume of liquid required to liberate significant quantities of trapped gas, verification that the valve closes when commanded (without a specified minimum closure time or leak rate verification) is adequate to meet the intent of this SR.

This valve, therefore, will be tested to ensure that it closes on command (i.e., when directed by a signal). This test shall verify that the valve will perform this safety function when required.

The surveillance frequency shall be based on operational experience and engineering judgment and considered adequate to monitor adverse trends in instrumentation performance and decrease the probability of equipment failure.

5.5.2.10.6 VERIFICATION OF WASTE TANK MIXING DEVICE MOTOR AND WASTE TANK TRANSFER PUMP MOTOR RESPONSE (SURVEILLANCE REQUIREMENTS 4.8.10.7, 4.8.10.10, AND 4.8.10.11)

The waste tank mixing device motors and waste tank transfer pump motors (transfer pumps associated with waste tank recirculation and saltcake interstitial liquid removal) are required to

de-energize when commanded by hardwired interlocks, which actuate on high hydrogen concentration. This function is required by the safety analysis to prevent exceeding flammable concentrations in the tank vapor space. This function, therefore, will be tested to ensure that the motors de-energize on command (i.e., when directed by a signal).

The surveillance frequency shall be based on operational experience and engineering judgment and considered adequate to monitor adverse trends in instrumentation performance and decrease the probability of equipment failure.

5.5.2.10.7 INSTRUMENT LOOP CHECK ON SAMPLE FLOW INDICATORS (SURVEILLANCE REQUIREMENT 4.8.10.8)

The instrument loop check ensures that a gross failure of the instrument has not occurred. The instrument loop check shall include a verification that the indicated flow drops below the lowest non-zero division on the scale when air flow through the rotameter is isolated. Indicated flow dropping below this value ensures that foreign material or deposits within the rotameter are not preventing the rotameter from indicating low flow conditions.

The surveillance frequency shall be based on operational experience and engineering judgment and considered adequate to monitor adverse trends in instrumentation performance and decrease the probability of equipment failure.

5.5.2.11 Area Radiation Monitoring – Waste Storage Tanks (Limiting Condition for Operation 3.8.11)

Chapter 3 credits ARMs for mitigating the consequences for an SMP Waste Release scenario, SMP Column Explosion scenario, and Aerosolization Events (SMP operations) by alerting operators to the radiological release. Therefore, this LCO requires that portable and/or permanently installed ARMs, specified in accordance with the ARM Location Program, be operable to provide coverage (during operations stated below) and that the radiation level at the ARM shall be less than or equal to the setpoints of the instruments (as defined by Reference 22). The ARMs shall be operable to provide coverage during SMP operations. Requiring operable radiation monitoring provides operations personnel with an indication of any increase in radiation levels above the normal expected background levels. An increase in radiation levels may signify a potential release of material from the pump boundary or an aerosolization in the waste tank. Therefore, an operable ARM shall be capable of detecting area radiation levels and alerting operators (e.g., control room alarm or local alarm for portable ARMs) when a pre-determined setpoint is reached. Time delay relays (less than or equal to 60 seconds) are permitted on the alarm actuation circuits. The ARM Location Program will specify the type of ARM alarm (e.g., control room or local) required for each of the designated ARM locations. The control room or local alarm for the ARM must provide both audible and visual indications of the alarm condition.

This LCO is required during SMP operation in Gas Release, Operation, Acidic Chemical Cleaning, and Non-Acidic Chemical Cleaning Modes. This LCO is not applicable to Tank 39 or 50 as SMP operation is prohibited in these tanks.

In the event that a credited ARM is inoperable or radiation levels at the ARM are greater than the setpoint of the instruments, actions shall be taken to immediately stop waste tank mixing devices in the affected waste tank.

5.5.2.11.1 VERIFICATION OF PORTABLE AREA RADIATION MONITORS ALARM STATUS (SURVEILLANCE REQUIREMENT 4.8.11.1)

This verification shall ensure that any required portable ARMs (ARMs not connected to control room alarms) are not in alarm. Chapter 3 credits ARMs for mitigating an SMP Waste Release, SMP Column Explosion, and Aerosolization Events (SMP operations). This alerts operators to the radiological release during these activities such that actions can be taken to stop the release. Therefore, verification of the ARM alarm status shall be performed on a frequent basis during SMP operation.

5.5.2.11.2 VERIFICATION OF AREA RADIATION MONITORS ARE WITHIN RANGE (SURVEILLANCE REQUIREMENT 4.8.11.2)

This verification shall ensure that the indicated radiation levels on the hardwired and portable ARMs are within the range of the meter. This surveillance, including performance frequency, shall be consistent with the guidance outlined in References 22 and 23.

5.5.2.11.3 INSTRUMENT LOOP TEST OF THE WIRELESS AREA RADIATION MONITORS (SURVEILLANCE REQUIREMENT 4.8.11.3)

Performance of an instrument loop test on each required wireless ARM shall ensure that the instruments are capable of detecting an increased radiation level and annunciating it in the applicable control room. The instrument loop test ensures that a gross failure of the instrument has not occurred. This surveillance, including performance frequency, shall be consistent with the guidance outlined in References 22 and 23.

5.5.2.11.4 SOURCE CHECK OF AREA RADIATION MONITOR (SURVEILLANCE REQUIREMENT 4.8.11.4)

Since the safety analysis requires this system to function at waste tank locations, this SR requires verification that it can perform the function. Performance of a source check on the ARM instrument ensures that the instrument is capable of providing the required alarm to warn personnel of increasing radiation levels. This surveillance, including performance frequency, shall be consistent with the guidance outlined in References 22 and 23. This SR also ensures requirements for fiber optic cable analysis (Ref. 80) are met and the surveillance frequency shall be within the loop failure probability analysis (Ref. 51, 81) for alarm loops that utilize fiber optic cable.

5.5.2.11.5 INSTRUMENT LOOP CALIBRATION OF THE AREA RADIATION MONITORS (SURVEILLANCE REQUIREMENT 4.8.11.5)

The ARMs provide the required alarm to warn personnel of increasing radiation levels. This SR ensures calibration of the ARMs. This surveillance, including performance frequency, shall be consistent with the guidance outlined in References 22 and 23.

5.5.2.12 Submersible Mixer Pump Risers (Limiting Condition for Operation 3.8.12)

Chapter 3 credits the conductivity probes in the SMP Risers, and their associated interlocks for SMP waste release events. SMP Risers requiring conductivity probes and interlocks are those that have not been shown to be free draining. The probes and interlocks are credited with stopping the SMP. Therefore, this LCO requires the leak detection instrumentation (conductivity probe and interlock) to be operable with the appropriate setpoint value. The setpoint shall be sufficient to stop the SMP and minimize the spill volume. From Chapter 3, this LCO is required during SMP operations in Gas Release, Operation, Acidic Chemical Cleaning, or Non-Acidic Chemical Cleaning Mode.

In the event the waste level in one of the subject SMP risers is greater than the setpoint value or the required conductivity probe/interlock is inoperable, the affected SMP shall be immediately stopped. This eliminates the motive force thereby preventing any further waste from getting into the riser.

The leak detection instrumentation is performing its intended function when liquid in the riser above the setpoint value results in the SMP being stopped. Satisfactory placement of the credited conductivity probe is a requirement for the establishment of leak detection instrumentation operability.

5.5.2.12.1 INSTRUMENT LOOP TEST OF THE CONDUCTIVITY PROBE (SURVEILLANCE REQUIREMENT 4.8.12.1)

Performance of an instrument loop test on each required conductivity probe ensures that the instruments are capable of a detecting a high level condition. The instrument loop test verifies the operability of the conductivity probe and associated circuitry with the exception of a limited portion of the common return path encompassing the grounding scheme. This test does not include the interlock function, which is addressed in Section 5.5.2.12.2. This SR shall be performed on a routine basis to ensure that the conductivity probes are maintained in an operable state. This SR also ensures requirements for fiber optic cable analysis (Ref. 80) are met and the surveillance frequency shall be within the loop failure probability analysis (Ref. 51, 81) for alarm loops that utilize fiber optic cable.

5.5.2.12.2 INSTRUMENT LOOP TEST OF THE CONDUCTIVITY PROBE INTERLOCK (SURVEILLANCE REQUIREMENT 4.8.12.2)

This loop test shall verify that the interlock function is operable and that the installed instrumentation responds, as required. The surveillance frequency shall be based on operational

experience and engineering judgment and shall be adequate to monitor adverse trends in instrumentation performance and decrease the probability of equipment failure.

5.5.2.12.3 VERIFICATION OF CONDUCTIVITY PROBE HEIGHT (SURVEILLANCE REQUIREMENT 4.8.12.3)

The leak detection conductivity probe setpoint ensures that interlock will stop the pump prior to overflowing the riser. Therefore, conductivity probes are verified to be set at or below the level at which the riser would overflow. The surveillance frequency shall be based on engineering judgment and shall be adequate to verify the conductivity probes are maintained at the proper elevation.

5.5.2.13 Waste Tank Portable Ventilation Equipment (Limiting Condition for Operation 3.8.13)

Chapter 3 credits the availability of Portable Ventilation Equipment to prevent waste tank explosions (following a Seismic Event) and to prevent waste tank explosions and annulus explosions during chemical cleaning of Type I and II waste tanks (following a Tornado and High Winds Event, Seismic Event, Wildland Fire, and Loss of Offsite Power). If the normal ventilation system is inoperable on a waste tank or annulus, Portable Ventilation Equipment can be placed in service. The function of the Portable Ventilation Equipment is to provide emergency exhaust flow to prevent the buildup of flammable vapors to LFL (CLFL for Tank 50) conditions. The equipment is portable and may be hand-carried to the top of a tank or annulus in the event that the normal ventilation system fails and cannot be restored within the necessary time requirements. The Portable Ventilation Equipment is self-contained and does not rely on any site or facility utilities to accomplish the intended safety function. No fuel inventory/storage requirements are necessary for the Portable Ventilation Units, as it is judged that sufficient fuel can be obtained following an initiating event.

Each Portable Ventilation Unit consists of a blower assembly, generator, riser connection, and flexible duct section. The blower assembly draws suction from the tank or annulus bulk vapor space, pulls the flow through a HEPA filter, and exhausts the gases to atmosphere. In addition to the blower assembly, each unit has a generator to provide power, a flexible duct section, and a riser connection to connect the duct to the tank or annulus riser. Although the unit has a HEPA filter, the filter is not required safety-related equipment.

Waste Tank Portable Ventilation Equipment required following a seismic event is stored in a designated seismically qualified structure. Waste Tank Portable Ventilation Equipment required following a tornado/high winds event is also stored in designated locations; however, these locations are not required to be a tornado/high winds/missile qualified structure.

The safety analysis credits forced ventilation on static waste storage tanks (excluding Very Slow Generation Tanks) with providing sufficient purge flow rate through the tank to maintain the tank's bulk vapor space below flammable conditions. Dedicated Portable Ventilation Equipment, in conjunction with the Flammability Control Program, ensures that forced ventilation capabilities will be available for use on waste tanks following a Seismic Event.

The safety analysis also credits forced ventilation on waste tanks in Acidic Chemical Cleaning Mode with providing sufficient purge flow rate through the waste tank and annulus to maintain the bulk vapor space below flammable conditions. Dedicated Portable Ventilation Equipment, in conjunction with the Flammability Control Program, ensures that forced ventilation capabilities will be available for use on waste tanks and annuli following a Tornado and High Winds Event, Seismic Event, Wildland Fire, and Loss of Offsite Power.

Waste Tank Portable Ventilation Equipment is credited in the following accidents in the safety analysis: Waste Tank Explosion, Tornado and High Winds Event, Seismic Event, Wildland Fire, and Loss of Offsite Power.

This LCO requires the Waste Tank Portable Ventilation Equipment stated in the LCO to be operable for the required number of Portable Ventilation Units.

The number of dedicated Portable Ventilation Units, stored in the designated seismically qualified structure, shall be equal to the number of waste tanks in Acidic Chemical Cleaning Mode and waste tanks that may become flammable within 24 hours after the seismic event, plus a sufficient number to ensure that the balance of the waste tanks do not become flammable within seven days following the seismic event. The number of additional ventilation units (to ensure flammable conditions are not reached in seven days) shall be based on the following criteria:

- One additional unit is required when less than or equal to seven waste tanks can become flammable in greater than 24 hours and in less than seven days following a seismic event.
- Two additional units are required when greater than seven waste tanks can become flammable in greater than 24 hours and in less than seven days following a seismic event.

The criteria for the number of additional ventilation units is based on engineering judgment and is considered conservative because it is unlikely that all primary or annulus ventilation systems that are required will fail; and, for those that do fail, it is anticipated that they could be restored within several days post-seismic. Additionally, the Portable Ventilation Units do not have to be continuously operated on an individual waste tank or annulus and the units can be rotated as necessary between waste tanks. Also for waste tanks in Acidic Chemical Cleaning Mode, other actions (e.g., neutralizing the tank contents) may be taken to extend the time to reach 100% of the LFL.

The number of dedicated Portable Ventilation Units, stored in the designated locations for use following a tornado/high winds event, shall be equal to the number of waste tanks in Acidic Chemical Cleaning Mode. The designated locations for these units are not required to be tornado/high winds/missile qualified structures. However, to ensure availability following a tornado/high winds event, one Portable Ventilation Unit will be stored in a designated location in F-Area Tank Farm and one Portable Ventilation Unit will be stored in a designated location in H-Area Tank Farm for each waste tank in Acidic Chemical Cleaning Mode. Portable Ventilation

Units dedicated and stored for use following a seismic event may also be used as those dedicated for use following a tornado/high winds event.

Because changes in waste tank conditions and planned operations may occur, the post-seismic time to LFL (CLFL for Tank 50) of waste tanks (and resulting number of required Portable Ventilation Units) may change. Additionally, the number of waste tanks in Acidic Chemical Cleaning Mode (and resulting number of required Portable Ventilation Units) may change depending on planned operations. Therefore, the Emergency Response Data (ERD) (Ref. 46) will provide the number of dedicated Portable Ventilation Units required for each storage location (i.e., seismic and tornado/high winds event designated storage locations).

For a Portable Ventilation Unit to be considered operable, it must have the equipment necessary for operation as stated in the LCO and the equipment must be stored in the required designated storage location(s). For Waste Tank Portable Ventilation Equipment required to be stored in the designated seismically qualified structure, the components shall be properly stored such that they are available following a seismic event (e.g., component in proper storage rack with associated restraints fastened). Also for the blower assembly and generator to be considered operable, they must be capable of starting and the blower assembly must be capable of providing flow. The blower assembly does not have a specific credited flowrate. Based on engineering judgment, the nominal flow capacities of these portable blowers are significantly greater than the required flow for a Rapid Generation Tank or Chemical Cleaning Tank and will provide adequate flow.

This LCO is required for waste tanks in Gas Release, Operation, Acidic Chemical Cleaning, or Non-Acidic Chemical Cleaning Modes.

When the number of operable Portable Ventilation Units is less than the required number for the applicable designated storage location, actions shall be taken to restore the inoperable equipment such that the number of units meets the required value. The completion time shall limit the period during which the Portable Ventilation Units are allowed to be in a degraded condition.

The completion time shall be based on engineering judgment and operational experience and provide sufficient time to perform necessary repairs to the units. The completion time limits the period over which the number of operable Portable Ventilation Units may be less than the required number.

5.5.2.13.1 PORTABLE VENTILATION OPERABILITY VERIFICATION (SURVEILLANCE REQUIREMENT 4.8.13.1)

Verifying that each portable ventilation blower assembly and generator can be started ensures that the Portable Ventilation Unit is capable of performing an air sweep in the tank or annulus vapor space to prevent the buildup of flammable vapors. This SR shall be performed and met for the required number of Portable Ventilation Units stated in the ERD (Ref. 46). The surveillance frequency shall be based on engineering judgment and shall be adequate to ensure the operability of the equipment.

5.5.2.13.2 PORTABLE VENTILATION COMPONENT VISUAL INSPECTION (SURVEILLANCE REQUIREMENT 4.8.13.2)

Performing a visual inspection of the Waste Tank Portable Ventilation Equipment required components ensures that the required components are:

- Free from significant physical damage (i.e., damage that would preclude the component from performing its intended safety function).
- Located in the required designated storage location(s).
- Stored correctly to ensure availability following a seismic event (e.g., component in proper storage rack with associated restraints fastened). This requirement is applicable to equipment required to be stored in the designated seismically qualified structure.

This SR shall be performed and met for the required number of Portable Ventilation Units stated in the ERD (Ref. 46). The surveillance frequency shall be based on engineering judgment and shall be adequate to ensure the operability of the equipment.

5.5.2.14 Tank 50 Waste Temperature Monitoring (Limiting Condition for Operation 3.8.14)

Chapter 3 credits Tank 50 waste temperature monitoring to prevent waste tank explosions as well as limiting the trace organic contribution to the hydrogen LFL to 5%. The safety analysis credits periodic temperature monitoring on Tank 50, which potentially contains the solvent Isopar® L. Isopar® L is the dominant organic constituent that originates from the MCU process that can contribute to the Tank 50 steady state CLFL. The flammable vapor contribution from Isopar® L increases with increased waste temperatures. This LCO is required for Tank 50.

Maintaining the average bulk waste temperature in Tank 50 will ensure that equilibrium Isopar® L and trace organics are maintained within initial conditions (< 60%) for the contribution to the Tank 50 steady state CLFL. When the Tank 50 average bulk waste temperature is maintained less than or equal to 43°C and applying initial conditions set forth by other programs for flammability (i.e., waste tank fill limit initial conditions established by the Tank Fill Limits Program, assumed initial flammable vapor concentration of less than or equal to 60% of the CLFL [due to contributions from trace organics (less than or equal to 5%), and Isopar® L], and Tank 50 hydrogen generation rate), Tank 50 will not reach 100% of CLFL following a loss of primary tank ventilation (Ref. 69, 83). The Tank 50 waste temperature monitoring instrument loop is also utilized in the Waste Acceptance Criteria Program (Section 5.5.4.2.15).

In the event Tank 50 waste temperature is greater than 43°C, the following actions shall be taken:

1. Immediately stop transfers into and out of Tank 50 (except for Contingency Transfer System transfers and those liquid additions needed to place the tank in a safe condition).

2. Immediately stop waste tank mixing device operations.

3. Immediately stop transfer pumps associated with waste tank recirculation in the tank.

4. Isolate steam to the annulus ventilation system.

5. Ensure forced ventilation is operating on the tank.

The need for the immediate completion time for Actions 1, 2, and 3 above are warranted because these activities ensure additional hydrogen-generating waste, waste containing Isopar® L, or trace organics is not added to the tank while the tank average bulk waste temperature is higher than the allowed value. Stopping transfers into the tank also limits the reduction of the available tank vapor space volume. Stopping transfers out of the waste tank stops heat addition due to the effect of the transfer pump and transfer pump recirculation line heating the waste. Stopping waste tank mixing devices and transfer pumps associated with waste tank recirculation prevents additional heating of the waste in the tank. These activities also directly affect the release rate of trapped hydrogen. Actions associated with steam jetted transfers are not required, since steam jetted transfers into Tank 50 are prohibited.

The limited liquid additions allowed by Action 1 are typically of small volumes. Although introduction of this liquid to the waste tank will cause a minor increase in tank level, the increase in risk associated with these small additions is considered acceptable considering the potential benefits achieved by the additions (e.g., restoring ability to transfer liquid out of the tank, restoring normal ventilation on the tank, restoring ability to monitor liquid level). Allowing Contingency Transfer System transfers to continue or start (Action 1) is intended to ensure that transfers necessary to support emptying an affected waste tank annulus are not prohibited. Contingency Transfer System transfers are transfers of waste from the annulus of a leaking waste tank back to the primary side of the same waste tank using the Contingency Transfer System, and these transfers do not reduce waste tank vapor space volume and have minimal impact on waste temperature or additional hydrogen release from the waste.

Actions 4 and 5 ensure that the annulus ventilation does not contribute to the heating of the bulk waste in the tank and allows the annulus ventilation system to provide a cooling effect to the tank. Ensuring forced ventilation is operating on Tank 50 maintains the hydrogen contribution to Tank 50 CLFL at a minimum value and ensures ambient air purges the tank bulk vapor space to allow atmospheric air to cool the waste.

Similar immediate actions are required in the event the tank waste temperature instrumentation is inoperable. To be operable, the elevation of the temperature element is required to be below the level of the waste in the tank. Immediate responses for these actions are warranted because of their potential to increase the flammable vapor concentrations in the tank. The initial temperature verification shall be sufficiently limiting to ensure that time is available to complete the actions associated with a high temperature condition discussed previously. Verification that the temperature is less than the safety analysis value shall continue on a frequent basis until the credited temperature monitoring system is operable.

5.5.2.14.1 VERIFICATION OF TANK WASTE TEMPERATURE IS WITHIN THE VALUE SPECIFIED (SURVEILLANCE REQUIREMENT 4.8.14.1)

Chapter 3 credits the ability to maintain the temperature of Tank 50 waste to less than or equal to the safety analysis value. Since LCO 3.8.14 requires a maximum temperature limit for Tank 50 waste, verification on a routine basis is required. Frequency shall be commensurate with comparatively large inventories normally associated with waste tanks, taking into consideration the ambient conditions that influence tank temperature.

5.5.2.14.2 INSTRUMENT LOOP CHECK ON THE INSTALLED TEMPERATURE INDICATORS (SURVEILLANCE REQUIREMENT 4.8.14.2)

This loop check is intended to detect a gross failure of the instruments between the calibrations of SR 4.8.14.3. Failure of the loop check shall require declaring the instrumentation inoperable. The surveillance frequency shall be based on operational experience and engineering judgment and considered adequate to monitor adverse trends in instrumentation performance.

5.5.2.14.3 INSTRUMENT LOOP CALIBRATION ON THE INSTALLED TEMPERATURE INDICATORS (SURVEILLANCE REQUIREMENT 4.8.14.3)

The temperature instrumentation is required by the safety analysis to ensure that Tank 50 waste bulk average waste temperatures remain within analyzed values. Verification of the tank waste temperature requires use of calibrated instrumentation. This SR ensures calibration of the temperature instrumentation and that the instrument reads within the uncertainty utilized in the calculation of the temperature setpoint. The surveillance frequency shall be within the time documented in the uncertainty analysis and considered adequate to ensure that the temperature instrumentation can perform its intended safety function.

5.5.2.15 Waste Tank Purge Ventilation System – Acidic Chemical Cleaning (Limiting Condition for Operation 3.8.15)

The safety analysis credits the waste storage tank ventilation to prevent waste tank explosion events and to mitigate aerosolization event releases. The safety analysis also credits the waste storage tank ventilation to provide an active elevated release path (via the exhaust stack) to ensure adequate dispersion of potential chemical vapors from the waste tank vapor space on Type I/II Acidic Chemical Cleaning Waste Tanks.

As defined in Chapter 3 for waste tank flammability classification, Chemical Cleaning Tanks are waste storage tanks (containing un-neutralized OA) that have been determined to go from the safety analysis value (25%) to 100% of the LFL in three days following a loss of ventilation.

The Waste Tank Purge Ventilation System on Type I/II Acidic Chemical Cleaning Waste Tanks is credited with the following safety functions:

- Provide sufficient purge flow rate through the tank to maintain the tank bulk vapor space below flammable conditions and protect the initial hydrogen concentration within the tank vapor space.

- Provide a filtered release path to minimize the release of entrained waste from aerosolization events (i.e., waste tank mixing device operation).
- Provide an active elevated release path (via the exhaust stack) to ensure adequate dispersion of potential chemical vapors from the waste tank vapor space.

To satisfy the flammability safety function of the ventilation system, a minimum ventilation flow rate is required. For Chemical Cleaning Tanks, Reference 71 demonstrates a minimum flow rate of 110 scfm is adequate, accounting for the radiolytic and corrosion induced hydrogen generation (and trapped gas release from 10,000 gallons of sludge), to protect the initial hydrogen concentration of 25% of the LFL and provide at least three days to LFL following a loss of ventilation. The minimum flow rate of 110 scfm is based on the vapor space volume protected by the waste tank high level alarm initial conditions (≤ 63.8 inches for Type I and ≤ 64.8 inches for Type II). The 110 scfm flow rate for Chemical Cleaning Tanks does not account for hydrogen released from steam jetted transfers, since steam jetted transfers into or out of waste tanks in Acidic Chemical Cleaning Mode are prohibited.

This LCO requires that the Waste Tank Purge Ventilation System be operable and delivering a flow rate of at least 110 scfm (with flow indication). To be operable, the Waste Tank Purge Ventilation System requires an operating fan generating the required purge flow through the system, an intact flow path (e.g., ductwork, filter housing, reheater shell) from the waste tank to the exhaust stack discharge, and an online exhaust HEPA filter capable of removing radioactive particulate from the exhaust stream. The LCO value for Chemical Cleaning Tanks will be based on the safety analysis value (110 scfm) and adjusted for instrument uncertainty.

This LCO is required for waste tanks in Acidic Chemical Cleaning Mode (see LCO 3.8.1 for Operation and Non-Acidic Chemical Cleaning Modes or LCO 3.8.9 for Gas Release Mode).

In order for the Waste Tank Purge Ventilation System to be operable, this LCO also requires an online exhaust HEPA filter capable of removing radioactive particulate from the exhaust stream. If an exhaust HEPA filter is inoperable and an operable HEPA filter is installed in the system and can be placed on line, immediate action shall be taken to place an operable exhaust HEPA filter in service and remove the inoperable HEPA filter from service. This action allows shifting to an operable standby filter, when available in the system, and is not applicable to ventilation systems with only one installed HEPA filter.

For Chemical Cleaning Tanks, if the exhaust flow is less than 110 scfm, the ventilation system is inoperable, or the flow indicator is inoperable, the following actions shall be taken:

1. Immediately stop liquid additions into the affected tank (except for Contingency Transfer System transfers and those liquid additions needed to place the tank in a safe condition including addition of material to neutralize the acid in the waste tank).

2. Immediately stop waste tank mixing devices in the affected tank.

3. Ensure forced ventilation is operating on the affected tank (and verified periodically until tank ventilation is restored) or verify, hydrogen concentration is less than or equal to 25% of the LFL.

Additionally, if the ventilation system is inoperable, Industrial Hygiene monitoring and protective actions (as required) shall be initiated immediately. This action ensures worker exposure to mercury is within safe levels when the ventilation system is in a degraded condition.

For ventilation systems that contain two 100% capacity HEPA banks, completion of Action 1 is not required if the ventilation system is inoperable due solely to SR testing required to declare a HEPA filter operable. This provision allows HEPA testing to establish the in-place performance test efficiency required by SR 4.8.15.3. While performing HEPA testing of a new filter, it is acceptable to allow additions to continue into of the affected tank. In practical terms, an installed HEPA of unknown efficiency provides some measure of protection. The brief period the HEPA filter bank may be declared inoperable during testing does not appreciably elevate the risk of a release event. However, in the unlikely instance where the efficiency test fails, the operable HEPA filter bank (if available) shall be placed back in service or the Action shall be invoked.

The need for the immediate completion time for Actions 1 and 2 above are warranted because these activities directly affect the release rate of hydrogen as well as reducing the vapor space volume (impacts time to LFL). The limited liquid additions allowed by Action 1 are typically of small volumes. Although introduction of this liquid to the waste tank will cause a minor increase in tank level, the increase in risk associated with these small additions is considered acceptable considering the potential benefits achieved by the additions (e.g., restoring ability to transfer liquid out of the tank, restoring normal ventilation on the tank, restoring ability to monitor liquid level). Allowing the addition of material to neutralize acid reduces the corrosion induced hydrogen generation rate, thus increasing the time to LFL. Allowing Contingency Transfer System transfers to continue or start (Action 1) is intended to ensure that transfers necessary to support emptying an affected waste tank annulus are not prohibited. Contingency Transfer System transfers are transfers of waste from the annulus of a leaking waste tank back to the primary side of the same waste tank using the Contingency Transfer System, and these transfers do not reduce waste tank vapor space volume and have minimal impact on additional hydrogen release from the waste.

Forced ventilation shall be provided to the affected tank within two days (time to LFL for a Chemical Cleaning Tank is three days) unless vapor space monitoring is initiated (also within two days) and continued on a frequent basis until tank ventilation is restored. The monitoring shall ensure that the vapor space hydrogen concentration remains less than or equal to the safety analysis value (25%). If the hydrogen concentration exceeds the limit, the actions of LCO 3.8.16 are applicable.

5.5.2.15.1 TANK VENTILATION FLOW VERIFICATION (SURVEILLANCE REQUIREMENT 4.8.15.1)

Since LCO 3.8.15 requires a minimum waste tank ventilation flow rate (110 scfm), verification on a routine basis is required. This surveillance is met by reading and recording the measured flow rate of the credited flow indication instrument. The frequency of the surveillance shall ensure that there is adequate time to respond to a loss of tank vapor space purge flow.

5.5.2.15.2 INSTRUMENT LOOP CALIBRATION OF EXHAUST FLOW INDICATOR (SURVEILLANCE REQUIREMENT 4.8.15.2)

The installed ventilation flow indication is required to be operable. This SR ensures calibration of the credited flow indicator and that the associated instrumentation reads within the calculated uncertainty. The surveillance frequency shall be within the time documented in the uncertainty analysis and shall be based on operational experience and engineering judgment to ensure that the installed flow indicator can perform its intended safety function.

5.5.2.15.3 HIGH-EFFICIENCY PARTICULATE AIR FILTER PERFORMANCE TEST (SURVEILLANCE REQUIREMENT 4.8.15.3)

A minimum HEPA filter efficiency of 99.5% bounds the various values used in the analyses (see Section 3.4.1.5.2). Therefore, initial and periodic HEPA filter performance testing (i.e., PAO test or equivalent) shall be performed to ensure an efficiency of 99.5% or better. The surveillance frequency shall be based on the guidance provided in References 19 and 20.

The ventilation system shall be operating at a normal flow rate for the system during the performance test of the HEPA filter. This ensures that the test is performed under the same conditions as the system is expected to operate. Verification of normal flow can be based on having the exhaust fan operating with the system aligned to ventilate the waste tank, and indication of normal system flow (e.g., installed equipment such as flow indicator, tank vacuum, component differential pressures, as applicable, reading within normal limits). This is consistent with the Nuclear Air Cleaning Handbook (Ref. 62), which states that the in-place test is performed at operational airflow.

Tank ventilation systems typically operate near the nominal system flow rate. Variations in ventilation system flow rate will occur normally over time. These variations can occur due to filter loading, changes in ventilation system conditions (such as demister fouling), and position of dampers. Typically, such variations are small relative to the nominal system flow.

HEPA filters capture particles by three basic mechanisms, inertial impaction, Brownian motion, and interception. Two of these mechanisms, inertial impaction and Brownian motion, are affected by flow rate. The efficiency for inertial impaction increases as flow rate increases, while the efficiency due to Brownian motion increases as flow rate decreases. The net effect of these two mechanisms is to maintain overall efficiency relatively constant over a wide range of flows. Therefore, normal variations in flow do not affect the results of the in-place performance test (Ref. 62).

5.5.2.16 <u>Hydrogen Monitoring – Acidic Chemical Cleaning (Limiting Condition for Operation 3.8.16)</u>

Chapter 3 credits waste storage tank hydrogen monitoring for Chemical Cleaning Tanks. The hydrogen monitoring provides additional validation of the effectiveness of the credited waste tank ventilation (LCO 3.8.15). From Chapter 3, the extent of the waste tank hydrogen monitoring and the equipment required to be operable depends on the Mode status of the tank (Gas Release/Operation/Acidic Chemical Cleaning/Non-Acidic Chemical Cleaning).

This LCO states the waste tank hydrogen monitoring requirements that are associated with Chemical Cleaning Tanks. As defined in Chapter 3 for waste tank flammability classification, Chemical Cleaning Tanks are waste storage tanks (containing un-neutralized OA) that have been determined to go from the safety analysis value (25%) to 100% of the LFL in three days following a loss of ventilation. The hydrogen monitoring requirements for tanks under a different Mode (excluding Tank 50) are discussed in separate LCOs (see LCOs 3.8.2, 3.8.3, and 3.8.10).

Chapter 3 credits waste storage tank periodic hydrogen monitoring for verifying the hydrogen concentration value to allow detection of a high hydrogen concentration and subsequent operator response. Therefore, this LCO requires that the waste tank vapor space hydrogen concentration be less than or equal to the safety analysis value (25% of the LFL). The LCO value for hydrogen concentration will be based on the safety analysis value (25% of the LFL), adjusted for potential organics and instrument uncertainty.

Waste tank vapor space flammability monitoring ensures that conditions causing excessive hydrogen concentration can be detected and actions taken in sufficient time to prevent a tank explosion.

In the event that the waste tank vapor space hydrogen concentration is greater than 25% of the LFL, the following actions shall be taken:

1. Immediately stop liquid additions into the affected tank (except for Contingency Transfer System transfers and those liquid additions needed to place the tank in a safe condition including addition of material to neutralize the acid in the waste tank).

2. Immediately stop waste tank mixing devices in the affected tank.

3. Ensure forced ventilation is operating on the affected tank (and verified frequently until hydrogen concentration is less than or equal to 25% of the LFL).

The need for the immediate completion time for Actions 1 and 2 above are warranted because these activities directly affect the release rate of hydrogen as well as reducing the vapor space volume (impacts time to LFL). The limited liquid additions allowed by Action 1 are typically of small volumes. Although introduction of this liquid to the waste tank will cause a minor increase in tank level, the increase in risk associated with these small additions is considered acceptable considering the potential benefits achieved by the additions (e.g., restoring ability to transfer liquid out of the tank, restoring normal ventilation on the tank, restoring ability to monitor liquid level). Allowing the addition of material to neutralize acid reduces the corrosion induced hydrogen generation rate, thus increasing the time to LFL. Allowing Contingency Transfer System transfers to continue or start (Action 1) is intended to ensure that transfers necessary to support emptying an affected waste tank annulus are not prohibited. Contingency Transfer System transfers are transfers of waste from the annulus of a leaking waste tank back to the primary side of the same waste tank using the Contingency Transfer System, and these transfers do not reduce waste tank vapor space volume and have minimal impact on additional hydrogen release from the waste.

The completion time for Action 3 (and recurring verification frequency) shall consider the Chemical Cleaning Tank flammability classification (time to LFL for a Chemical Cleaning Tank is three days). This action shall be effective until the hydrogen concentration is less than or equal to 25% of the LFL.

5.5.2.16.1 WASTE TANK VAPOR SPACE HYDROGEN CONCENTRATION VERIFICATION (SURVEILLANCE REQUIREMENT 4.8.16.1)

Since LCO 3.8.16 limits the maximum waste tank vapor space hydrogen concentration, routine verification of the hydrogen concentration is required. This surveillance, which was developed using portable monitors only, is met by reading and recording the measured percent LFL from a portable monitor.

5.5.2.17 Waste Storage Tank Level – Acidic Chemical Cleaning (Limiting Condition for Operation 3.8.17)

Chapter 3 credits the waste storage tank fill level for the Waste Tank Explosion events and Waste Tank Siphon/Pump-Out events (Tank 2 only). Additionally, maximum tank level protects initial conditions/assumptions used in the following events: Aerosolization, Waste Tank Annulus Explosion, Waste Tank Wall Failure, Tornado and High Winds Event, Seismic Event, Wildland Fire, and Loss of Offsite Power. Each waste storage tank is equipped with at least one HLLCP. The HLLCP is the credited means for detecting exceeding the fill limit.

The maximum allowed level for Type I/II Acidic Chemical Cleaning Waste Tanks protects assumed initial tank conditions for determination of flammability control requirements (e.g., minimum ventilation flow, time to LFL). The maximum level for flammability requirements will also protect other less conservative level limits required (as discussed in Section 5.5.2.4) for the safety analyses in the waste tank (e.g., level limit to protect siphon/pump-out on Tank 2). The fill limit for Type I/II Acidic Chemical Cleaning Waste Tanks does not need to account for the maximum volume associated with a Transfer Error event (i.e., 15,000 gallons). Waste Transfers into these tanks are prohibited and the associated event from the safety analyses (tank overflow) is not applicable.

From Chapter 3, the waste level and monitoring requirements depends on the Mode status of the tank (Gas Release/Operation/Acidic Chemical Cleaning/Non-Acidic Chemical Cleaning). This LCO states the waste level and monitoring requirements that are associated with Acidic Chemical Cleaning Mode. The waste level and monitoring requirements for Gas Release, Operation, and Non-Acidic Chemical Cleaning Modes is discussed in LCO 3.8.4.

This LCO provides the fill limit for each waste storage tank as well as requiring the operability of the HLLCP and associated control room alarm. Some waste storage tanks have two control room alarms associated with the HLLCP. For these waste tanks, this LCO requires operability of both control room alarms. Each HLLCP must be capable of providing alarm indication in the applicable control room. The control room alarm alerts the operator that the tank liquid level is at (or above) the fill limit setpoint. Time delay relays (less than or equal to 60 seconds) are permitted on the alarm actuation circuits. The control room alarm(s) for the HLLCPs must

provide both audible and visual indications of the alarm condition. Satisfactory placement of the credited HLLCP is a requirement for the establishment of tank level instrumentation operability.

For Type I/II Acidic Chemical Cleaning Waste Tanks, the fill limit protects assumed initial tank conditions for determination of flammability control requirements (primary and annulus) and protects a maximum annulus equilibrium liquid level (following a tank wall breach). The maximum allowed levels for these functions are ≤ 63.8 inches (Type I) and ≤ 64.8 inches (Type II).

The tank HLLCP is positioned at a fixed level. When the HLLCP detects that the liquid level has risen to this fixed level, an alarm signal is sent to the control room.

Upon receipt of an HLLCP alarm, the following actions shall be taken:

1. Immediately stop liquid additions into the tank (except for Contingency Transfer System transfers and those liquid additions needed to place the tank in a safe condition including addition of material to neutralize the acid).

2. Immediately stop waste tank mixing devices in the affected tank (except for operation of waste tank mixing devices necessary to place the tank in a safe condition [i.e., mixing required to ensure adequate neutralization of acid]).

Similar immediate actions are required in the event the tank level instrumentation is inoperable. In the event that only the redundancy of the control room alarm is lost (for waste storage tanks that have two control room alarms associated with the HLLCP), latitude may be given to the completion times. The time to complete the actions should allow the operators ample time to restore the equipment to operable status, but sufficiently limiting to not create an unacceptable risk of the remaining alarm also becoming inoperable. Immediate responses for these actions are warranted because of their potential to reduce the vapor space volume and time to LFL.

The limited liquid additions allowed by Action 1 are typically of small volumes. Although introduction of this liquid to the waste tank will cause a minor increase in tank level, the increase in risk associated with these small additions is considered acceptable considering the potential benefits achieved by the additions (e.g., restoring ability to transfer liquid out of the tank, restoring normal ventilation on the tank, restoring ability to monitor liquid level). Allowing the addition of material to neutralize acid reduces the corrosion induced hydrogen generation rate, thus increasing the time to LFL. Allowing Contingency Transfer System transfers to continue or start (Action 1) is intended to ensure that transfers necessary to support emptying an affected waste tank annulus are not prohibited. Contingency Transfer System transfers are transfers of waste from the annulus of a leaking waste tank back to the primary side of the same waste tank using the Contingency Transfer System, and these transfers do not reduce waste tank vapor space volume and have minimal impact on additional hydrogen release from the waste.

The limited operation of waste tank mixing devices allowed by Action 2 (i.e., mixing required to ensure adequate neutralization of acid) are typically of a short duration and require minimal mixing (e.g., operation of one waste tank mixing device). Although operation of waste tank mixing devices may cause a minor increase in hydrogen released from the waste, the increase in

risk associated with these operations is considered acceptable considering the potential benefits achieved by the mixing operation (e.g., neutralizing the tank contents, allowing for Mode transition). Neutralizing the acid reduces the corrosion induced hydrogen generation rate, thus increasing the time to LFL.

In addition to the immediate actions discussed above, actions shall also be taken to ensure that the hydrogen concentration in the vapor space remains less than 25% of the LFL. This action ensures that the ventilation flow requirements of LCO 3.8.15 remain valid. Additionally, actions shall be taken to ensure forced ventilation is operating on the affected tank. Because of the reduction in vapor space volume, the completion time shall be sufficiently limiting to allow for the fact that three days to LFL may not be available on the waste tank. If waste level is above the maximum allowed value, either the time needed for the tank to reach LFL is less than three days or the time is indeterminate. In this condition, an increase in the frequency of checks on the tank's flammable vapor concentration and waste tank ventilation status are warranted.

In addition to the immediate actions discussed above, actions shall be taken in response to an inoperable HLLCP to verify that the tank level is less than the fill limit. The initial verification shall be sufficiently limiting, considering the loop test surveillance frequency, to ensure that time is available to complete the actions associated with a high level condition discussed previously. Verification that the level is less than the TSR limit shall continue on a frequent basis until the credited HLLCP is operable.

During acidic spray washing activities, the tank level instrumentation will be inoperable; therefore, the following actions shall be taken: 1) Stop liquid additions, except for batch additions from a supply tank(s) of less than or equal to 8,000 gallons total volume that do not have continuous makeup capability, into the affected tank, 2) Verify that affected tank liquid level is less than or equal to the fill limit, and 3) Restore the required HLLCP/alarm to operable status in the affected tank. Immediate response for the first action is warranted because of potential to reduce the vapor space volume and time to LFL.

The limited liquid additions, except for batch additions from a supply tank(s) of less than or equal to 8,000 gallons total volume that do not have continuous makeup capability, allowed by Action 1 are typically of small volumes. Although introduction of this liquid to the waste tank will cause a minor increase in tank level, the increase in risk associated with these small additions is considered acceptable. The limited liquid addition also ensures that the addition is within the assumptions of the analysis while the tank level monitoring is in a degraded condition. The liquid source system shall be considered to have continuous makeup capability if the system has an automatic or manual fill provision that is not electrically or mechanically isolated. The electrical or mechanical isolation shall contain two independent means of isolation (e.g., two isolation valves; one isolation valve and open disconnect for liquid source transfer pump).

5.5.2.17.1 INSTRUMENT LOOP TEST OF HIGH LIQUID-LEVEL CONDUCTIVITY PROBE (SURVEILLANCE REQUIREMENT 4.8.17.1)

Performing an instrument loop test on the required HLLCP ensures that the instrumentation is operable and capable of alarming upon receiving a signal from the required conductivity probes. The HLLCP shall not be considered inoperable during the performance of this SR. The loop test

is a simple activity of short duration. This approach is considered acceptable since it is unlikely that a significant tank level increase would occur during the HLLCP loop test. This SR shall be performed on a routine basis to ensure that the HLLCP is maintained in an operable state. This SR also ensures requirements for fiber optic cable analysis (Ref. 80) are met and the surveillance frequency shall be within the loop failure probability analysis (Ref. 50, 82) for alarm loops that utilize fiber optic cable.

5.5.2.17.2 VERIFICATION OF WASTE STORAGE TANK HIGH LIQUID-LEVEL CONDUCTIVITY PROBE HEIGHT (SURVEILLANCE REQUIREMENT 4.8.17.2)

The waste storage tank HLLCP setpoint ensures that the waste tank liquid volume is within analyzed limits. Therefore, the HLLCPs shall be verified to be set at, or below, the fill limit (including uncertainty). The frequency of this surveillance shall be based on operational experience and engineering judgment and considered adequate to monitor adverse trends in instrumentation performance.

5.5.2.18 Annulus Level/Ventilation– Acidic Chemical Cleaning (Limiting Condition for Operation 3.8.18)

From Chapter 3, the annulus ventilation, annulus level monitoring, and annulus leak detection instrumentation requirements depend on the Mode status of the tank. This LCO states the annulus ventilation, annulus level monitoring, and annulus leak detection instrumentation requirements that are associated with Acidic Chemical Cleaning Mode. The annulus ventilation and annulus level monitoring requirements for Gas Release, Operation, and Non-Acidic Chemical Cleaning Modes are discussed in LCO 3.8.5.

Chapter 3 credits the waste storage tank annulus level for protecting the initial hydrogen concentration used in the following events: Waste Tank Annulus Explosion, Tornado and High Winds Event, Seismic Event, Wildland Fire, and Loss of Offsite Power. The safety analysis also credits the Type I and II waste tank annulus conductivity probes and alarms for event detection and mitigative actions in the Waste Tank Annulus Explosion event.

The safety analysis credits the Type I and II Waste Tank Annulus Ventilation Systems (negative pressure) to maintain the concentration of flammable vapors in the waste tank annulus bulk vapor space to less than or equal to 25% LFL accounting for radiolytic and corrosion induced hydrogen generation. The Waste Tank Annulus Ventilation System shall provide at least 40-scfm actual flow rate (no flow indication required) to ensure this safety function is met (Ref. 72). The safety analysis also credits the ventilation system to ensure airborne releases within the waste tank annulus are mitigated via HEPA filtration. Additionally, the safety analysis credits the ventilation system to provide an active elevated release path (via the exhaust stack) to ensure adequate dispersion of potential chemical vapors from the annulus vapor space. Type I and II Waste Tank Annulus Ventilation Systems are credited in the following accidents in the safety analysis: Waste Tank Annulus Explosion and Waste Tank Wall Failure.

This LCO requires that the Waste Tank Annulus Ventilation System be operable. To be operable, the Waste Tank Annulus Ventilation Systems require an operating fan generating the

required purge flow through the system, an intact flow path (e.g., ductwork, filter housing) from the waste tank annulus to the exhaust stack discharge, and an online exhaust HEPA filter capable of removing radioactive particulate from the exhaust stream.

This LCO also requires that the waste level in an annulus be less than or equal to the residual volume as provided in Table 3.4-3 for each waste tank type and requires that one leak detection instrument be operable in a waste tank annulus. The leak detection instrumentation is performing its intended function when liquid in the tank annulus can be identified to the control room such that appropriate actions can be taken. Time delay relays (less than or equal to 60 seconds) are permitted on the alarm actuation circuits. The control room alarm for the annulus conductivity probes must provide both audible and visual indications of the alarm condition. Satisfactory placement of the credited conductivity probe is a requirement for the establishment of leak detection instrumentation operability.

If the ventilation system is inoperable, actions shall be taken to verify that the waste level in annulus is below that specified in Table 3.4-3. Verifying the waste level in the affected annulus (and verified on a frequent basis until tank annulus ventilation is restored) ensures that the level in the annulus did not increase to a point where ventilation system restoration would be required sooner due to potential increased corrosion induced hydrogen generation (from higher acidic waste levels in the annulus). Forced ventilation shall be provided to the tank annulus within five days (minimum time to LFL) and continued (and frequently monitored) until the ventilation system is restored. This limits the period during which hydrogen can accumulate in the annulus from residual waste. Additionally, if the ventilation system is inoperable, Industrial Hygiene monitoring and protective actions (as required) shall be initiated immediately. This action ensures worker exposure to mercury is within safe levels when the ventilation system is in a degraded condition.

In order for the Waste Tank Annulus Ventilation System to be operable, this LCO also requires an online exhaust HEPA filter capable of removing radioactive particulate from the exhaust stream. If an exhaust HEPA filter is inoperable and an operable HEPA filter is installed in the system and can be placed on line, immediate action shall be taken to place an operable exhaust HEPA filter in service and remove the inoperable HEPA filter from service. This action allows shifting to an operable standby filter, when available in the system, and is not applicable to ventilation systems with only one installed HEPA filter.

In the event that the waste level in the annulus is discovered to be greater than the volume provided in Table 3.4-3, the following actions shall be taken:

1. Immediately stop liquid additions into the affected tank (except for Contingency Transfer System transfers and those liquid additions needed to place the tank in a safe condition including addition of material to neutralize the acid in the waste tank).

2. Ensure forced ventilation is operating on the affected tank annulus (and verified frequently until tank annulus ventilation is restored).

The need for the immediate completion time for Action 1 above is warranted because this activity could permit waste levels in the annulus to be above those analyzed in the safety

analysis. The limited liquid additions allowed by Action 1 are typically of small volumes. Although introduction of this liquid to the waste tank will cause a minor increase in tank level and possible increase in annulus level from a tank breach, the increase in risk associated with these small additions is considered acceptable considering the potential benefits achieved by the additions (e.g., restoring ability to transfer liquid out of the tank, restoring normal ventilation on the tank, restoring ability to monitor liquid level). Allowing the addition of material to neutralize acid reduces the corrosion induced hydrogen generation rate in the primary tank, thus also reducing this rate in the annulus if the neutralized waste leaks through the primary wall. Allowing Contingency Transfer System transfers to continue or start (Action 1) is intended to ensure that transfers necessary to support emptying an affected waste tank annulus are not prohibited. Contingency Transfer System transfers are transfers of waste from the annulus of a leaking waste tank back to the primary side of the same waste tank using the Contingency Transfer System, and these transfers do not reduce waste tank vapor space volume and have minimal impact on additional hydrogen release from the waste.

Forced ventilation shall be provided to the affected tank annulus within 2.5 days (minimum assumed time to LFL) and continued on a frequent basis until the annulus level is restored. Restoring the level within the residual waste level values of Table 3.4-3, restores the assumed time to LFL as analyzed in the safety basis in the event the ventilation system becomes inoperable.

In the event that the leak detection instrumentation is inoperable, actions shall be taken to verify that the acidic waste level in the annulus is below that specified in Table 3.4-3. Waste level in the annulus is checked frequently to detect an increase in annulus waste level; therefore, allowing time to respond before flammable conditions are reached.

5.5.2.18.1 ANNULUS VENTILATION VERIFICATION (SURVEILLANCE REQUIREMENT 4.8.18.1)

Since LCO 3.8.18 requires annulus ventilation system flow, verification on a routine basis is required. This surveillance shall be accomplished by visual and/or audible inspection that the exhaust fan is operating to ventilate the waste tank annulus. The frequency of the surveillance shall ensure that there is adequate time to respond to a loss of annulus ventilation flow.

5.5.2.18.2 INSTRUMENT LOOP TEST OF ANNULUS CONDUCTIVITY PROBE (SURVEILLANCE REQUIREMENT 4.8.18.2)

Performance of an instrument loop test on each required conductivity probe ensures that the instruments are capable of detecting a high level condition and annunciating in the applicable control room. The instrument loop test verifies the operability of the entire instrument loop (e.g., conductivity probe and associated circuitry and control room alarms) with the exception of a limited portion of the common return path encompassing the grounding scheme. This SR shall be performed on a routine basis to ensure that the conductivity probes are available to detect a release. This SR also ensures requirements for fiber optic cable analysis (Ref. 80) are met and the surveillance frequency shall be within the loop failure probability analysis (Ref. 51, 81) for alarm loops that utilize fiber optic cable.

5.5.2.18.3 HIGH-EFFICIENCY PARTICULATE AIR FILTER PERFORMANCE TEST (SURVEILLANCE REQUIREMENT 4.8.18.3)

A minimum HEPA filter efficiency of 99.5% bounds the various values used in the analyses (see Section 3.4.1.5.2). Therefore, initial and periodic HEPA filter performance testing (i.e., PAO test or equivalent) shall be performed to ensure an efficiency of 99.5% or better. The surveillance frequency shall be based on the guidance provided in References 19 and 20.

The ventilation system shall be operating at a normal flow rate for the system during the performance test of the HEPA filter. This ensures that the test is performed under the same conditions as the system is expected to operate. Verification of normal flow can be based on having the exhaust fan operating with the system aligned to ventilate the waste tank annulus, and indication of normal system flow (e.g., installed equipment such as flow indicator, tank annulus vacuum, component differential pressures, as applicable, reading within normal limits). This is consistent with the Nuclear Air Cleaning Handbook (Ref. 62), which states that the in-place test is performed at operational airflow.

Tank annulus ventilation systems typically operate near the nominal system flow rate. Variations in ventilation system flow rate will occur normally over time. These variations can occur due to filter loading, changes in ventilation system conditions (such as demister fouling), and position of dampers. Typically, such variations are small relative to the nominal system flow.

HEPA filters capture particles by three basic mechanisms, inertial impaction, Brownian motion, and interception. Two of these mechanisms, inertial impaction and Brownian motion, are affected by flow rate. The efficiency for inertial impaction increases as flow rate increases, while the efficiency due to Brownian motion increases as flow rate decreases. The net effect of these two mechanisms is to maintain overall efficiency relatively constant over a wide range of flows. Therefore, normal variations in flow do not affect the results of the in-place performance test (Ref. 62).

5.5.2.18.4 ANNULUS EXHAUST FAN CAPACITY VERIFICATION (SURVEILLANCE REQUIREMENT 4.8.18.4)

Since LCO 3.8.18 requires a minimum annulus ventilation flow rate, verification of the exhaust fan capacity on a periodic basis is required. The minimum flow required to be verified is 40 scfm. This surveillance shall be accomplished by reading and recording the measured flow rate using either installed flow instrumentation or Measuring and Test Equipment and accounting for uncertainty. The frequency of the surveillance shall be based on operational experience and engineering judgment and considered adequate to monitor adverse trends in equipment performance.

5.5.2.18.5 VERIFICATION OF ANNULUS CONDUCTIVITY PROBE HEIGHT (SURVEILLANCE REQUIREMENT 4.8.18.5)

The annulus conductivity probe setpoint ensures that the annulus volume is within analyzed limits. Therefore, the annulus conductivity probe shall be verified to be set at, or below, the

residual height given in Table 3.4-3 (including uncertainty). The frequency of this surveillance shall be based on operational experience and engineering judgment and considered adequate to monitor adverse trends in instrumentation performance.

5.5.2.19 Waste Temperature Monitoring – Acidic Chemical Cleaning (Limiting Condition for Operation 3.8.19)

Chapter 3 credits waste temperature monitoring of average bulk waste temperature (for the waste tank and transfer material) to protect initial conditions used in the accident analysis. The maximum allowed temperature protects assumed initial conditions for determination of flammability control requirements. The safety analysis credits this for the following events: Transfer Facility Explosions, Pump Pit and Pump Tank Explosion, and Waste Tank Explosion. This LCO is required for waste tanks in Acidic Chemical Cleaning Mode.

The contribution to the total flammable vapor concentration from corrosion induced hydrogen generation rate is based on initial conditions associated with the temperature. These corrosion induced hydrogen generation rates (and hence temperature) apply to the waste tank contents and to the transfer material. The corrosion induced hydrogen generation rates are used to determine flammability controls related to waste tanks and transfer facilities involved with chemical cleaning operations. Maintaining the average bulk waste temperature (for the waste tank or transfer material) within the initial conditions used to determine safety analysis value (less than or equal to 60°C), ensures hydrogen induced corrosion generation rates are within that assumed in the safety analysis.

Because this LCO is protecting an initial condition assumption in Chapter 3, no equipment operability is specified within this LCO. Instrumentation used to monitor temperature can include the installed instrumentation or portable equipment. The effects of instrument uncertainty or accuracy will be accounted for during comparison to the allowed temperature limit. Waste temperature monitoring instrumentation shall be capable of detecting an increase in waste tank average bulk waste temperature. To ensure an accurate average bulk waste temperature indication, the elevation of the temperature monitoring element shall be below the waste level in the tank.

In the event waste temperature is greater than 60°C, the following actions shall be taken:

1. Immediately stop Chemical Cleaning Transfers out of the affected tank.

2. Immediately stop waste tank mixing devices in the affected tank.

The need for the immediate completion time for Actions 1 and 2 above are warranted because these activities restore waste tank conditions within initial conditions for application of the assumed corrosion induced hydrogen generation rate used in the safety analyses. Stopping waste tank mixing devices also prevents additional heating of the waste in the tank.

5.5.2.19.1 VERIFICATION OF TANK WASTE TEMPERATURE (SURVEILLANCE REQUIREMENT 4.8.19.1)

Chapter 3 credits the ability to maintain the average bulk waste temperature to less than or equal to the safety analysis value to protect initial conditions used in the accident analysis. Since LCO 3.8.19 requires a maximum temperature limit during waste tank mixing device operation and during Chemical Cleaning Transfers, verification on a periodic basis is required. Frequency shall be commensurate with comparatively large inventories normally associated with waste tanks, taking into consideration the ambient conditions that influence tank temperature.

5.5.3 ELECTRICAL POWER TECHNICAL SAFETY REQUIREMENT DERIVATION

The safety analysis credits backup power to the HDB-8 PVV System for preventing pump tank explosion events. This requires a Diesel Generator (DG) and its support systems to be covered by an LCO.

5.5.3.1 Standby Electrical Power (Limiting Condition for Operation 3.9.1)

Standby electrical generation capabilities are provided for the HDB-8 PVV System to maintain power to safety loads and services when normal power is not available. The standby electrical system for HDB-8 is equipped with a DG unit and auxiliary equipment, including instrumentation, controls, indication, annunciation, and distribution. The HDB-8 DG System includes a fuel storage tank. This LCO is applicable during Operation and Standby Modes for the HDB-8 Complex pump tanks.

If the HDB-8 DG System becomes inoperable, immediate action shall be taken to stop steam jetted transfers into the HDB-8 Complex pump tanks and isolate steam jets in the HDB-8 Complex pump tanks and PP/DB sumps. These actions will ensure that the time-limited actions associated with steam jetted transfers in LCO 3.7.6 (e.g., recovery times) are not required while the backup power supply for the HDB-8 PVV System is in a degraded condition. Additionally, either the DG must be returned to operable status or an alternate DG (with a capacity that is greater than or equal to the loads required to be powered) shall be installed (electrically connected) within seven days. Seven days is sufficient time to perform the SRs that render the DG operable or install an alternate DG, and is considered an acceptable risk based on the reliability of the normal power. If the alternate DG is installed, the DG shall be electrically connected to the Motor Control Center B30 Stub Bus. Breakers/disconnects are not required to be closed for the alternate DG to be considered electrically connected (these are positioned if required to start the alternate DG). After the alternate DG is installed/connected, acceptable reasons to electrically disconnect the DG for limited periods include HDB-8 DG System restoration or operability checks (e.g., load testing), alternate DG maintenance, and DG failure/replacement. If an alternate DG is installed, the normal DG system shall be restored to operable status within 60 days. Sixty days provides sufficient time to complete the expected preventive/corrective maintenance on the DG system.

If an alternate DG is installed, surveillances equivalent to the following SRs (including initial performance and recurring frequency) shall be performed on the alternate DG to ensure functionality: SR 4.9.1.1, SR 4.9.1.2, SR 4.9.1.3, SR 4.9.1.4, SR 4.9.1.6, SR 4.9.1.7, SR 4.9.1.11,

and SR 4.9.1.12. Surveillances equivalent to SR 4.9.1.5, SR 4.9.1.8, SR 4.9.1.9, and SR 4.9.1.10 are not required for the alternate DG. The Automatic Transfer Switch (SR 4.9.1.5) does not apply to the alternate DG. The particulate contamination check of SR 4.9.1.8 is related to fuel oil degradation during long-term storage. The loss of power test (SR 4.9.1.9) does not apply as the alternate DG requires manual starting/loading and the load test equivalent surveillance (SR 4.9.1.7) is acceptable to ensure the alternate DG has load capability. The 1-Year requirements associated with fuel oil testing (SR 4.9.1.10) are not necessary due to the limited duration associated with the alternate DG.

The alternate DG will not typically be a like-for-like DG with the HDB-8 DG and the SRs for this LCO are based on the specific design of the HDB-8 DG. The term "surveillances equivalent to" above does not imply identical surveillances/parameters as the SRs for this LCO but rather that the equivalent parameter or function is checked. For example, SR 4.9.1.4 verifies starting battery voltage is adequate based on nominal design voltage and manufacturer's recommendations of the HDB-8 DG. If the alternate DG has a different size starting battery, then the surveillance equivalent to SR 4.9.1.4 should verify voltage is adequate for that starting battery design/manufacturer. Additionally, since the DSA does not credit a specific duration of operation for the DG the surveillance equivalent to SR 4.9.1.1 need not verify the alternate DG fuel oil supply is capable of 40 hours of alternate DG operation. However, the surveillance equivalent to SR 4.9.1.1 shall ensure that the alternate DG fuel oil tank level is at least 3/4 full. This volume ensures the alternate DG is capable of operating and is considered acceptable based on the reliability of normal power and the limited duration that an alternate DG may be installed.

5.5.3.1.1 VERIFICATION OF FUEL OIL TANK LEVEL (SURVEILLANCE REQUIREMENT 4.9.1.1)

The fuel oil tank inventory shall be verified on a routine basis, and following DG shutdown, to ensure that an adequate fuel oil supply is available to the DG for operation. Although no specific duration of DG operation was credited in Chapter 3, the minimum fuel oil inventory shall be 100 gallons in order to support operation of the DG at full capacity for up to 40 hours (Ref. 89). The frequency of this SR shall be based on the guidance of National Fire Protection Association (NFPA) 110 (Ref. 59).

5.5.3.1.2 VERIFICATION OF ENGINE LUBRICATING OIL LEVEL (SURVEILLANCE REQUIREMENT 4.9.1.2)

The DG engine lubricating oil level shall be verified on a routine basis, and following DG shutdown, to ensure that proper lubricating oil inventory is available to the DG for operation. The engine lubricating oil level shall be based on manufacturer's recommendations. The frequency of this SR shall be based on the guidance of NFPA 110 (Ref. 59).

5.5.3.1.3 VERIFICATION OF ENGINE COOLANT LEVEL (SURVEILLANCE REQUIREMENT 4.9.1.3)

The DG engine coolant level shall be verified on a routine basis, and following DG shutdown, to ensure that proper coolant inventory is available to the DG for operation. The engine coolant

level shall be based on manufacturer's recommendations. The frequency of this SR shall be based on the guidance of NFPA 110 (Ref. 59).

5.5.3.1.4 VERIFICATION OF STARTING BATTERY VOLTAGE (SURVEILLANCE REQUIREMENT 4.9.1.4)

The DG starting battery voltage shall be verified on a routine basis to ensure that the battery is charged and capable of starting the DG on demand. The battery voltage shall be based on manufacturer's recommendations. The frequency of this SR shall be based on the guidance of NFPA 110 (Ref. 59).

5.5.3.1.5 CYCLE AUTOMATIC TRANSFER SWITCH (SURVEILLANCE REQUIREMENT 4.9.1.5)

The Automatic Transfer Switch (ATS) shall be cycled on a routine basis to ensure that the power supply source can be transferred from normal to backup power. The test shall consist of electrically operating the ATS from the primary position to the alternate position and then returning the switch to the primary position. The frequency of this SR shall be based on the guidance of NFPA 110 (Ref. 59).

5.5.3.1.6 VERIFICATION OF FUEL OIL FREE WATER (SURVEILLANCE REQUIREMENT 4.9.1.6)

Sampling for free water (i.e., water that exists as a separate phase) in the DG fuel oil tank shall be performed on a routine basis to ensure the availability of high-quality fuel oil for the DG. Water in the fuel oil tank can provide the necessary environment for bacteria (leading to microbiological fouling and fuel oil degradation) and allow the potential for water entrainment in the fuel oil during DG operation. Frequent checking and removal of accumulated water minimizes fouling of the fuel oil system. The DG fuel oil tank shall be sampled for water using the guidance provided in References 28 and 60 to determine if visible free water is present. The frequency of this SR shall be based on the guidance of Reference 28.

The DG fuel oil tank is a flat-bottomed tank and does not have a low-point drain installed for water sampling/removal. However, Reference 60 permits the use of a bottom water sampler (or equivalent) to check for free water. Although this sample would be at one point in the fuel oil tank, this sampling method is considered acceptable for the free water verification based on the following:

- The fuel oil suction pipe to the engine is located approximately a half-inch from the fuel oil tank bottom, thus a significant amount of water (greater than 4.5 gallons) would need to be present before water entrainment to the engine occurs. Additionally, the engine fuel oil system contains a water separator and filter to further ensure water does not reach the engine.
- The DG fuel oil tank is a double-wall tank (located in an enclosure containing a jacket water heater) which aids in reducing the potential of condensation or water intrusion into the tank.

- Checking for water in the fuel oil is performed on a frequent basis (30 days) and fuel oil degradation due to water takes a significant amount of time. Even fuel that has undergone mild-to-moderate degradation can typically be consumed by the diesel engine in a normal way (Ref. 61). Additionally, the fuel oil typically contains biocides which destroy or inhibit the growth of fungi and bacteria which can grow at fuel-water interfaces.
- SR 4.9.1.8 samples the DG fuel oil tank for particulate contamination periodically. This check aids in ensuring fuel oil degradation (due to oxidation or biological fouling at the water-fuel oil interface) has not occurred or allows for corrective actions for adverse trends. Typically when particulate contamination levels exceed 10 mg/L, corrective actions are initiated to remove and replenish fuel oil supply or treat fuel oil with appropriate additives (Ref. 28).
- The DG is operated at least every 30 Days (SR 4.9.1.7, DG Load Test). The DG fuel oil return line discharges to the DG fuel oil tank, thus when the DG is in operation the fuel oil is recirculated. This movement of fuel oil aids in detecting water (within the DG fuel oil tank) during the next performance of SR 4.9.1.6. Additional assurance of water detection in the fuel oil is provided by periodic checks of the fuel oil system water separator (via the Nuclear Maintenance Management Program).

Failure of this SR shall require declaring the fuel oil unusable for the DG and the HDB-8 DG inoperable. Additionally, to restore operability of the HDB-8 DG following failure of this SR, the following shall be performed: remove existing fuel oil, clean/flush the fuel oil tank, and replenish fuel oil supply.

5.5.3.1.7 LOAD TEST (SURVEILLANCE REQUIREMENT 4.9.1.7)

The DG shall have a periodic load test performed to ensure the DG and support systems will perform their safety function. This ensures that the DG is capable of automatically starting from standby conditions, attaining/maintaining required voltage, frequency, and load conditions. This SR shall be accomplished by performing a DG load test consistent with the guidance provided within NFPA 110 (Ref. 59) and the manufacturer's recommendations (including load capacity and operation duration). During the DG load testing, the DG shall attain the required voltage and frequency within 30 seconds. The time requirement of 30 seconds is not imposed by the safety analysis but was selected to provide a reasonable time to start the DG and provide power. The frequency of this SR shall be based on the guidance of NFPA 110 (Ref. 59).

5.5.3.1.8 VERIFICATION OF FUEL OIL PARTICULATE LEVELS (SURVEILLANCE REQUIREMENT 4.9.1.8)

The DG fuel oil tank shall be sampled for particulate contamination periodically to ensure the availability of high-quality fuel oil for the DG. Fuel oil degradation during long-term storage shows up as an increase in particulates, due mostly to oxidation. The presence of particulates does not mean the fuel oil will not burn properly in a diesel engine. However, the particulates can cause fouling of filters and fuel oil injection equipment. The DG fuel oil tank shall be sampled for particulate contamination using the guidance provided in References 28 and 60. The limits and frequency of this SR shall be based on the guidance of Reference 28.

Failure of this SR shall require declaring the fuel oil unusable for the DG and the HDB-8 DG inoperable. Additionally, to restore operability of the HDB-8 DG following failure of this SR, one of the following shall be performed: remove and replenish fuel oil supply; or treat fuel oil with appropriate additive and confirm particulate contamination levels are within limits. Reference 28 provides guidance on the corrective actions for failed fuel oil properties.

5.5.3.1.9 LOSS OF POWER TEST (SURVEILLANCE REQUIREMENT 4.9.1.9)

The DG shall have a periodic loss of power test performed to ensure the DG and support systems will perform their safety function. This ensures that the DG is capable of automatically starting from standby conditions, attaining/maintaining required voltage, frequency, and load conditions upon a loss of power signal. This SR shall be accomplished by performing a loss of power consistent with the guidance provided within NFPA 110 (Ref. 59) and the manufacturer's recommendations (including load capacity and operation duration). During the loss of power test, the DG shall attain the required voltage and frequency within 30 seconds. The time requirement of 30 seconds is not imposed by the safety analysis but was selected to provide a reasonable time to start the DG and provide power. The frequency of this SR shall be based on the guidance of NFPA 110 (Ref. 59).

5.5.3.1.10 VERIFICATION OF FUEL OIL PROPERTIES (SURVEILLANCE REQUIREMENT 4.9.1.10)

The DG fuel oil tank shall be sampled periodically to ensure the availability of high-quality fuel oil for the DG. The fuel oil shall be sampled and analyzed to verify the following properties are within limits (Ref. 28, 61):

- American Petroleum Institute (API) gravity of greater than or equal to 30 and less than or equal to 39
- Kinematic viscosity at 40°C is greater than or equal to 1.9 centistokes and less than or equal to 4.1 centistokes
- Cloud point is less than or equal to 23°F
- Cetane number is greater than or equal to 40
- Lubricity (by High-Frequency Reciprocating Rig at 60°C) is less than or equal to 520 microns
- Conductivity is greater than or equal to 25 picosiemens/meter

The DG fuel oil tank shall be sampled for the fuel oil properties stated above using the guidance provided in References 28 and 60. Additional tests are mentioned in Reference 28 that include storage/oxidation stability, bio-diesel content, and acid number which are associated with degraded fuel oil and are typically only performed on fuel oil storage tanks with a large capacity (to allow for testing and recovery). Other tests (e.g., particulate contamination) are performed to indicate fuel oil degradation and would typically require removing degraded fuel oil and cleaning the fuel oil tank. Therefore, tests associated with storage/oxidation stability, bio-diesel content, and acid number are not included in this surveillance. The fuel oil properties for this

surveillance are based on Reference 61 and the frequency shall be based on the guidance of Reference 28.

Failure of this SR shall require declaring the fuel oil unusable for the DG and the HDB-8 DG inoperable. Additionally, to restore operability of the HDB-8 DG following failure of this SR, one of the following (dependent on the fuel oil property) shall be performed: remove and replenish fuel oil supply; or treat fuel oil with appropriate additive and confirm applicable fuel oil properties are within limits. Reference 28 provides guidance on the corrective actions for failed fuel oil properties.

5.5.3.1.11 PRE-UNLOADING VERIFICATION OF NEW FUEL OIL PROPERTIES (SURVEILLANCE REQUIREMENT 4.9.1.11)

New fuel oil shall be sampled to ensure the availability of high-quality fuel oil for the DG. The new fuel oil shall be sampled and analyzed to verify the following properties are within limits (Ref. 28, 61):

- API gravity is greater than or equal to 30 and less than or equal to 39
- Kinematic viscosity at 40°C is greater than or equal to 1.9 centistokes and less than or equal to 4.1 centistokes
- Sediment and water is less than or equal to 0.05% by volume
- Flash point is greater than or equal to 126°F
- Visual appearance is clear and bright

The property tests stated above are a means of determining whether new fuel oil is of the appropriate grade and has not been contaminated with substances that would have an immediate detrimental impact on diesel engine combustion. If results from these tests are within acceptable limits, the fuel oil may be added to the fuel oil tank without concern for contaminating the entire volume of fuel oil in the tank. The fuel oil shall be sampled for the fuel oil properties stated above prior to adding the new fuel oil to the DG fuel oil tank using the guidance provided in References 28 and 60.

Failure to meet any of the above limits is cause for rejecting the new fuel oil, but does not represent a failure to meet the SR, as long as the fuel oil is not added to the DG fuel oil tank.

5.5.3.1.12 VERIFICATION OF NEW FUEL OIL PROPERTIES (SURVEILLANCE REQUIREMENT 4.9.1.12)

New fuel oil shall be sampled to ensure the availability of high-quality fuel oil for the DG. The fuel oil properties listed below may impact long-term operability of the DGs. The new fuel oil shall be sampled and analyzed to verify the following properties are within limits (Ref. 28, 61):

- Cloud point is less than or equal to 23°F
- Sulfur content is less than or equal to 15 ppm (for Grade 2-D S15) or less than or equal to 0.05 wt. % (for Grade 2-D S500)

- Carbon residue is less than or equal to 0.35 %
- Ash content is less than or equal to 0.01 wt. %
- Copper strip corrosion rating is a maximum of Number 3
- Cetane number is greater than or equal to 40
- Particulate contamination is less than or equal to 10 mg/L
- Distillation temperature range (90% point) is greater than or equal to 540°F and less than or equal to 640°F

The fuel oil shall be sampled for the fuel oil properties stated above during new fuel oil unloading to the DG fuel oil tank using the guidance provided in References 28 and 60; however, test results and verification of fuel oil property limits is not required prior to adding the new fuel oil to the storage tank. This is acceptable because the fuel oil properties of interest, even if they were not within stated limits, would not have an immediate effect on DG operation.

Failure of this SR shall require declaring the fuel oil unusable for the DG and the HDB-8 DG inoperable. Additionally, to restore operability of the HDB-8 DG following failure of this SR, one of the following (dependent on the fuel oil property) shall be performed: remove and replenish fuel oil supply; or treat fuel oil with appropriate additive and confirm applicable fuel oil properties are within limits. Reference 28 provides guidance on the corrective actions for failed fuel oil properties.

5.5.4 FACILITY ADMINISTRATIVE CONTROLS

The Hazards Analysis section of Chapter 3 (Section 3.3) discusses numerous events that do not require quantitative accident analysis, since they do not result in a high or moderate offsite consequence. However, certain ACs are required to ensure adequate worker protection. These ACs may be Programmatic Controls or SACs as described in Section 5.3. The Accident Analysis section of Chapter 3 (Section 3.4) outlines ACs that are required as levels of control for DBAs. Chapter 4 details controls that must be in place to overcome system vulnerabilities or upkeep of the system. Facilities that interface with CSTF also have requirements for CSTF.

The controls to meet the above requirements are detailed in the following subsections and annotated in Table 5.9-1 as appropriate. Table 5.9-1 does not attempt to illustrate those ACs that are considered “general” to the entire safety basis (e.g., chemical inventory control, corrosion control, critical lift, industrial hygiene, inhalation dose potential, radiological protection, structural integrity, tank top/secondary containment loading, and traffic control). Exceptions occur when “unique” elements of a program are specifically credited in the safety analysis of Chapter 3.

5.5.4.1 Procedure Controls (Administrative Control 5.8.1)

The safety analysis assumes that operations within the facility are controlled by procedures, which have been approved according to facility ACs. These procedures shall govern the facility operations in a controlled manner under all circumstances. These controls are necessary to ensure safety analysis assumptions on how the facility is operated are maintained.

The safety analysis credits that procedures specifically exist for the following activities:

- Operational activities
- Maintenance activities (including corrective and preventive maintenance)
- Emergency and abnormal operating procedures
- Security plan implementation
- Emergency plan implementation
- All surveillances required by TSRs
- Administrative aspects of facility operation
- Programs specified in Section 5.8.2 of TSRs
- Mode changes

Refer to Chapter 3 for the specific actions required by the safety analysis to be within the procedures.

5.5.4.2 Programs and Manuals (Administrative Control 5.8.2)

The following programs shall be established, implemented, and maintained.

5.5.4.2.1 RADIOLOGICAL PROTECTION PROGRAM (ADMINISTRATIVE CONTROL 5.8.2.1)

Procedures for personnel radiological protection shall be prepared consistent with DOE requirements and shall be approved, maintained, and adhered to for all operations involving personnel radiation exposure. The Radiological Protection Program shall ensure that the radiation exposure of onsite and offsite individuals is maintained within applicable DOE limits and is As Low As Reasonably Achievable. The program shall ensure that individual and collective radiation exposures are minimized. The CSTF shall follow site and facility procedures for operations involving personnel radiation exposure.

This program is designated as a Programmatic Controls Administrative Control. Although this program may provide support for the LCOs involved with ARMs (establishes and adjusts setpoints), the ARMs are not part of a first level of control for DBAs and the DSA does not credit a specific setpoint. This program is part of a broad safety management program. Therefore, this program does not warrant identification as a SAC.

5.5.4.2.2 EMERGENCY RESPONSE PROGRAM (ADMINISTRATIVE CONTROL 5.8.2.2)

The facility specific annex to the Site Emergency Plan (SCD-7) (Ref. 48) shall define specific measures, policies, and actions to prevent or minimize injuries, damage to property, and impact on the environment caused by accidents, natural disasters, or deliberate damage within the area of responsibility.

The Facility Manager shall ensure that the facility specific annex to the Site Emergency Plan (SCD-7) is maintained in accordance with applicable DOE requirements, based on formal hazard assessment and requirements. The facility specific annex should contain the following elements at a minimum:

a. Emergency response organization

b. Operational emergency event classes

c. Notification

d. Consequence assessment

e. Protective actions

f. Medical support

g. Recovery and reentry

h. Emergency facility and equipment

i. Training

j. Drills and exercises

k. Program administration

This program is designated as a Programmatic Controls Administrative Control. Although this program is part of a second level of control in DBAs, the program is part of a broad safety management program and is not part of a bounding condition in DBAs. Therefore, this program does not warrant identification as a SAC.

5.5.4.2.3 ENVIRONMENTAL COMPLIANCE PROGRAM (ADMINISTRATIVE CONTROL 5.8.2.3)

The site Environmental Compliance Program shall comply with federal and state environmental regulations. The CSTF shall follow site and facility procedures governing the applicable environmental regulations.

This program is designated as a Programmatic Controls Administrative Control. This program is part of a broad safety management program and is not part of a first or second level of control or bounding condition in DBAs. Therefore, this program does not warrant identification as a SAC.

5.5.4.2.4 INDUSTRIAL HYGIENE PROGRAM (ADMINISTRATIVE CONTROL 5.8.2.4)

The Industrial Hygiene Program shall serve to maintain employee exposures to chemical, physical, and biological hazards within safe levels. Determination of the necessary ventilation stack discharge heights to ensure adequate dispersion of potential chemical vapors is conducted by the Mercury Task Team; which includes representatives from Industrial Hygiene and Engineering. The CSTF shall follow site and facility procedures governing the applicable Industrial Hygiene regulations.

This program is designated as a Programmatic Controls Administrative Control. This program is part of a broad safety management program and is not part of a first or second level of control or bounding condition in DBAs. Therefore, this program does not warrant identification as a SAC.

5.5.4.2.5 CRITICAL LIFT PROGRAM (ADMINISTRATIVE CONTROL 5.8.2.5)

A Critical Lift Program for movement of loads over SC or SS SSCs shall be implemented. This program shall ensure movement of loads over these locations is conducted in a manner that will minimize the potential of damaging safety-related SSCs due to load drops. This program shall include, as a minimum, the following attributes:

- Minimization of lifting heights
- Verification of load charts
- Lift stability
- Verification of rigging
- Positioning of lifting equipment in a safe manner when not in use

This program is designated as a Programmatic Controls Administrative Control. Although this program is part of a first level of control in DBAs, the program provides a support function to aid in maintaining safety SSC integrity. This program provides a broad safety management function which is contained in organizational procedures and does not involve time critical operator actions. Therefore, this program does not warrant identification as a SAC.

5.5.4.2.6 FIRE PROTECTION PROGRAM (ADMINISTRATIVE CONTROL 5.8.2.6)

A Fire Protection Program shall be established to minimize the threats to the public health or welfare as well as the hazards to site personnel resulting from a fire. The Fire Protection Program shall address, at a minimum, fire prevention (e.g., fire-resistive construction, combustible control, control of ignition sources, facility inspections, and handling of combustible/flammable materials), and fire control (e.g., automatic detection/suppression and alarm systems, fire patrols/watches, availability/maintenance of fire-fighting equipment, identification of fire-fighting personnel, responsibilities and training, and 24-hour fire-fighting coverage).

This program is designated as a Programmatic Controls Administrative Control. Although specified as a bounding condition in a DBA (general control of combustible loading), the DSA does not credit a specific loading for this program. This control is within the normal aspects of this broad safety management program and this program does not warrant identification as a SAC.

5.5.4.2.7 INSTALLED PROCESS INSTRUMENTATION (IPI), MEASURING AND TEST EQUIPMENT, (M&TE), AND OTHER TSR MEASURING DEVICES (ADMINISTRATIVE CONTROL 5.8.2.7)

IPI and M&TE shall be identified and programmatically controlled when used to monitor process variables (e.g., level, temperature) to comply with the requirements of this DSA. Controls shall include, at a minimum, traceability of TSR-related instruments, calibration frequencies for applicable TSR-related instruments, and evaluation of TSR-related items found outside of calibration tolerances.

Equipment used as measuring devices to comply with the requirements of the DSA/TSR that are not part of the IPI or M&TE programs shall have the required capability/accuracy for performance of the specified requirement. This equipment shall also be within applicable calibration and preventive maintenance frequencies.

Requirements and responsibilities for the control of laboratory equipment are defined by Procedure Manual 1Q, Procedure 2-7 (Ref. 49). This procedure requires a Measurement Control Program, which defines sample analysis protocols.

This program is designated as a Programmatic Controls Administrative Control. This program provides support to SSCs used as a level of control or bounding condition. However, this program is part of a broad safety management program and does not warrant identification as a SAC.

5.5.4.2.8 CONFIGURATION MANAGEMENT PROGRAM (ADMINISTRATIVE CONTROL 5.8.2.8)

A Configuration Management Program shall be implemented that:

- Identifies and documents the technical baseline of SSCs and computer software.
- Ensures that changes to the technical baseline are properly developed, assessed, approved, issued, and implemented.
- Maintains a system for recording, controlling, and indicating the status of technical baseline documentation on a current basis.
- Controls the configuration of the SSCs specified in Chapter 4 to maintain their design function.
- Determines and implements testing/inspection requirements to ensure temporary modifications, used as credited SC or SS SSCs, meet Chapter 4 requirements.

This program is designated as a Programmatic Controls Administrative Control. This program provides support to SSCs used as a level of control or bounding condition. However, this program is part of a broad safety management program and does not warrant identification as a SAC.

5.5.4.2.9 NUCLEAR MAINTENANCE MANAGEMENT PROGRAM (ADMINISTRATIVE CONTROL 5.8.2.9)

A Nuclear Maintenance Management Program (NMMP) shall be established and implemented to ensure that effective measures are taken so that SSCs that are part of the safety basis are capable of performing their intended function.

This program is designated as a Programmatic Controls Administrative Control. This program provides support to SSCs used as a level of control or bounding condition. However, this program is part of a broad safety management program and does not warrant identification as a SAC.

5.5.4.2.10 NUCLEAR CRITICALITY SAFETY PROGRAM (ADMINISTRATIVE CONTROL 5.8.2.10)

The Nuclear Criticality Safety Program shall ensure the following requirements are met:

- Nuclear Criticality Safety Evaluations (NCSEs) and/or Nuclear Criticality Safety Assessments (NCSAs) shall be the base documents for nuclear criticality control. Processes shall be shown to be subcritical under normal and credible abnormal operating conditions.
- NCSEs/NCSAs shall be used to evaluate new processes, saltcake dissolution activities, saltcake interstitial liquid removal activities, aluminum dissolution processing, or significant process changes that may adversely impact the characteristics of nuclear criticality safety.
- NCSEs/NCSAs shall document the calculations and judgments used in determining that nuclear criticality safety is ensured.

This program is designated as a Programmatic Controls Administrative Control. This program provides support for evaluating criticality safety and identifying nuclear criticality safety barriers used as potential bounding conditions; however, this program does not warrant identification as a SAC.

5.5.4.2.11 QUALITY ASSURANCE PROGRAM (ADMINISTRATIVE CONTROL 5.8.2.11)

The facility Quality Assurance (QA) Program, through the site QA Program, shall:

- Require that sufficient records be maintained for activities affecting SC and SS SSCs
- Support independent assessment, verification, and inspection requirements to ensure compliance with the QA Program
- Provide for a graded approach to the application of QA requirements throughout the life of the facility

This program is designated as a Programmatic Controls Administrative Control. This program provides support to SSCs used as a level of control or bounding condition. However, this

program is part of a broad safety management program and does not warrant identification as a SAC.

5.5.4.2.12 STRUCTURAL INTEGRITY PROGRAM (ADMINISTRATIVE CONTROL 5.8.2.12)

The Structural Integrity Program shall assess each of the passive SC and SS SSCs (including passive portions of active SSCs) of Chapter 4 (as a minimum) and determine/implement testing requirements as appropriate. This program shall provide reasonable assurance that the evidence of structural or functional degradation during services is detected to permit corrective action before the function of the SSC is compromised. The program shall include, as a minimum, the following attributes:

- Evaluation of SC and SS SSCs to determine their ability to perform their intended safety function under operational and credible design basis events (including evaluation of untestable sections of transfer lines/jackets/encasements).
- Identification of initial and periodic examinations and operational checks of SC and SS SSCs (e.g., hydro test of evaporator tube bundles once every two years) during the life of the facility to identify if any degradation is occurring which may compromise the ability of the SSC to perform its safety function. Examples of parameters/conditions that may affect waste tanks (such that periodic inspection is required) include Nil-Ductility-Transition Temperature, thermal degradation of concrete, and differential pressure between tank and annulus.
- Post design basis event evaluations of SSCs to determine, in the event of a design basis event, if the event has damaged the SC or SS SSCs to the extent that they can no longer perform their safety function.

This program applies to permanently installed SSCs. See Section 5.5.4.2.8 for requirements associated with temporary modifications used as credited SC and SS SSCs.

This program is designated as a Programmatic Controls Administrative Control. Although this program is part of a first level of control or bounding condition in DBAs, the program provides a support function to aid in verifying and maintaining safety SSC integrity. This program provides a broad safety management function which is contained in organizational procedures and does not involve time critical operator actions. Therefore, this program does not warrant identification as a SAC. Additionally, aspects involved with Nil Ductility Transition Temperature (NDTT) were not judged to warrant SAC identification. Lowering tank wall temperatures near NDTT would be a slow developing scenario and allow for detection and corrective action.

5.5.4.2.13 CORROSION CONTROL PROGRAM (ADMINISTRATIVE CONTROL 5.8.2.13)

Programmatic controls shall be implemented to ensure that waste chemistry and characteristics (including temperature and corrosion inhibitor concentration) are controlled so that corrosion (e.g., general corrosion, stress corrosion, and pitting) will not impact the ability of safety-related

equipment (e.g., tank walls, internal tank cooling coils, transfer lines, and evaporator tube bundle) to perform its function when required. This program shall include, as a minimum, tank annulus ventilation operation and limits on pH, OH^-, NO_2^-, NO_3^-, SO_4^{-2}, and Cl^- as necessary to account for equipment corrosion. Periodic monitoring and sampling shall be performed consistent with ongoing activities associated with the safety related equipment (e.g., sludge slurrying, sludge washing, uninhibited water additions, and annulus ventilation outages). Increased corrosion rates will be allowed for Type I/II Chemical Cleaning Waste Tanks; however, the structural integrity of the tank top must still be maintained. The Waste Tank Chemical Cleaning Program (Section 5.5.4.2.50) addresses requirements for waste tanks receiving Chemical Cleaning Transfers (e.g., mixing requirements).

This program is designated as a Programmatic Controls Administrative Control. Although this program is part of a first level of control or bounding condition in DBAs, the program provides a support function to aid in verifying and maintaining safety SSC integrity. Additionally, any degradation of SSCs would be slow developing and allow for detection and corrective action. This program covers a varying array of assumptions (depending on specific tank conditions) and does not work well within an LCO type construction. This program provides a broad safety management function which is contained in organizational procedures and does not involve time critical operator actions. Therefore, this program does not warrant identification as a SAC.

5.5.4.2.14 TRAFFIC CONTROL PROGRAM (ADMINISTRATIVE CONTROL 5.8.2.14)

Programmatic controls shall be implemented to ensure that vehicle movements are controlled near SC or SS SSCs. These controls shall include, as necessary, the following:

- Posted motor vehicle speed limits
- Vehicle Barrier Requirements
- Limitations of vehicle traffic during critical evolutions

This program is designated as a Programmatic Controls Administrative Control. Although this program is part of a first level of control or bounding condition in DBAs, the program provides a support function to aid in verifying and maintaining safety SSC integrity. This program provides a broad safety management function which is contained in organizational procedures and does not involve time critical operator actions. Therefore, this program does not warrant identification as a SAC.

5.5.4.2.15 WASTE ACCEPTANCE CRITERIA PROGRAM (SPECIFIC ADMINISTRATIVE CONTROL 5.8.2.15)

5.5.4.2.15.1 <u>Safety Function</u>

The Waste Acceptance Criteria (WAC) Program is a SAC because the safety function is to protect the bounding initial assumptions (Section 3.4.1.5.6) for the accident analysis. The limits/requirements imposed by the WAC consist of the following (additional details on the criteria/methodology are identified in the referenced DSA section):

- inhalation dose potential (Sections 3.3.3.3, 3.4.1.5.1, and Table 3.3-18 [MCU Waste Feed Stream inhalation dose potential limit])
- fissile material (Chapter 6)
- fissile poisoning (Chapter 6)
- organic contribution to flammable vapors (Section 3.4.1.5.3)
- heat generation rate (Section 3.4.2.13)
- hydrogen generation rate (Section 3.4.1.5.5)
- Hazard Categorization for MCU (i.e., sum of the ratios less than 1.0 - see Table 3.3-18).

This SAC serves an SC/SS function for Chapter 3 accidents.

5.5.4.2.15.2 SAC Description

The WAC Program shall ensure that the composition of waste streams received into the facility is within analyzed limits. Waste streams received into the facility shall comply with the limits/requirements for inhalation dose potential, fissile material, fissile poisoning, organic contribution to flammable vapors, heat generation rate, hydrogen generation rate, and MCU Hazard Categorization. Waste streams not bounded by the analyzed isotopic and chemical inventory assumptions shall not be accepted unless a Unreviewed Safety Question (USQ) review has been performed and approved. Ensuring that the composition is within analyzed limits ensures that the assumptions made in calculating the consequences and deriving the limits in the safety analysis are maintained. The values used in the DSA analyses are bounding values for the waste streams; therefore, the WAC limits imposed are inherently conservative and no additional safety margins are imposed. Section 5.7.1 discusses the interaction of other facilities and the interaction of their TSRs (or other approved Safety Basis documentation) with CSTF requirements.

When sample results are utilized to demonstrate compliance with a limit/requirement, an analytical uncertainty of 2 Sigma shall be included prior to comparing to the limit/requirement (additional information and exceptions are described in Section 5.3). This is applicable to the following limits/requirements: inhalation dose potential, fissile material, organic contribution to flammable vapors, and Hazard Categorization for MCU.

Controls shall be implemented to ensure that the composition of CSTF waste streams is within the analyzed limits of the receiving facility's Safety Basis. Controls related to the WAC Program associated with ETP are not part of the SAC. Section 5.7.2 discusses the interaction of CSTF waste stream with other facilities and the interaction of their TSRs (or other approved Safety Basis documentation) with CSTF requirements.

In addition to requirements stated in Section 5.7.2, the following receiving facility's Safety Basis limits require additional controls to ensure that the CSTF waste stream is within analyzed limits:

- The Isopar® L concentration in salt solution transferred from Tank 50 to the Saltstone Facility shall be less than or equal to the SAC value of 11 parts per million (ppm)

(accounting for laboratory analysis uncertainty). The requirements below are not part of the SAC.

- A blend calculation shall be performed to specify the allowable total volume of Decontaminated Salt Solution that is permitted to be transferred from MCU to Tank 50. This calculation shall include a provision for an unanalyzed volume of Decontaminated Salt Solution permitted in Tank 50 with a reasonably conservative assumed Isopar® L concentration. This calculation shall also take into account the volume of transfers into and out of Tank 50. Prior to transfer initiation from MCU to Tank 50 or transfer initiation out of Tank 50, the transfer volume shall be verified to be within the bounds of the blend calculation. Transfers out of Tank 50 shall be monitored to ensure the volume transferred remains within the blend calculation.
- Representative batch sampling shall be performed prior to each transfer from MCU to Tank 50. Sample results shall be received prior to exceeding the unanalyzed transfer volume assumed in the blend calculation when Tank 50 transfers to the Saltstone Facility are in progress. Isopar® L concentration results from these samples shall be factored into subsequent updates of the blend and material balance calculations. If batch sample results are not obtainable, the batch shall be assumed to contribute to the unanalyzed transfer volume until a reasonably bounding Isopar® L concentration can be determined for the transfer based on past operating history and recent transfer analysis results.
- Tank 50 slurry pumps shall be operated to ensure adequate mixing of Isopar® L for transfers from Tank 50 to the Saltstone Facility. This will ensure the blend calculation will be representative of the Isopar® L concentration sent to the Saltstone Facility. Simultaneous operation of three rotating slurry pumps for 2.5 hours, two rotating slurry pumps for 3.1 hours, or one rotating slurry pump for 4.4 hours will ensure adequate mixing of the Tank 50 contents for a 24-hour period (Ref. 75).
- A material balance calculation shall be issued periodically to determine the Isopar® L concentration in Tank 50. This calculation shall incorporate the transfer volume into and out of Tank 50 and the Isopar® L sample results from MCU to Tank 50 transfers. This calculation shall verify compliance with the Isopar® L limit in the Saltstone Facility WAC. Operations shall control the Isopar® L concentration to less than or equal to 7 ppm (accounting for laboratory analysis uncertainty) based on the material balance information and expected process conditions. If the material balance indicates the Isopar® L concentration is greater than 7 ppm, transfers to the Saltstone Facility shall be terminated. Prior to resuming Saltstone Facility transfers, actions shall be completed to reduce the Isopar® L concentration to less than or equal to 7 ppm.
- During MCU operation, the Solvent Hold Tank (SHT) density shall be monitored to ensure MCU solvent remains within operating limits.
- An engineering evaluation shall be performed on a monthly basis to determine if Isopar® L is required to be added to the SHT to ensure MCU solvent remains

within operating limits. Isopar® L shall be added to the SHT as required by the evaluation.

  - The SHT shall be sampled quarterly and adjusted as necessary to ensure each of the MCU solvent components (Isopar® L, Cs-7SB, BOBCalixC6, Trioctylamine, MaxCalix, TiDG) remains within concentration limits.
  - During MCU operation, the Decontaminated Salt Solution (DSS) Coalescer differential pressure and pump discharge pressure shall be monitored (including alarm indication) to prevent coalescer breakthrough.

- The Isopar® L concentration in strip effluent transferred from MCU to the Defense Waste Processing Facility (DWPF) shall be less than or equal to the SAC value of 600 mg/L (accounting for laboratory analysis uncertainty). The requirements below are not part of the SAC.
  - During MCU operation, the SHT density shall be monitored to ensure MCU solvent remains within operating limits.
  - An engineering evaluation shall be performed on a monthly basis to determine if Isopar® L is required to be added to the SHT to ensure MCU solvent remains within operating limits. Isopar® L shall be added to the SHT as required by the evaluation.
  - The SHT shall be sampled quarterly and adjusted as necessary to ensure each of the MCU solvent components (Isopar® L, Cs-7SB, BOBCalixC6, Trioctylamine, MaxCalix, TiDG) remains within concentration limits.
  - The Strip Effluent Hold Tank (SEHT) shall be sampled during MCU operation, to provide verification that the strip effluent is within the DWPF Isopar® L WAC limits.
  - During MCU operation, the Strip Effluent Coalescer differential pressure and pump discharge pressure shall be monitored (including alarm indication) to prevent coalescer breakthrough.

- The pH in the strip effluent stream (except during contactor/coalescer cleaning) transferred from MCU to DWPF shall be greater than or equal to the SAC value of 2. The requirement below is not part of the SAC.
  - Independent verification of the acid concentration shall be performed prior to unloading to the Strip Feed Tank.

- The cesium concentration in strip effluent transferred from MCU to DWPF shall be less than or equal to the SAC value of 16.5 Ci/gal. The requirement below is not part of the SAC.
  - The Strip Feed Tank depletion rate shall be comparable to the Strip Feed flow meter to ensure compliance with the DWPF receipt requirements.

- The temperature of salt solution transferred from Tank 50 to the Saltstone Facility shall be less than or equal to 40°C, adjusted for instrument uncertainty. The requirement below is not part of the SAC.
  - Verification of the Tank 50 average bulk waste temperature using the installed Tank 50 temperature instrumentation shall be performed prior to transfer to ensure compliance with the Saltstone Facility requirements.

This program was designated a SAC due to the variety of requirements, which cannot be accomplished using an engineered safety system.

5.5.4.2.15.3 Functional Requirements

The WAC Program shall ensure that waste streams received into the facility are sufficiently characterized to demonstrate compliance with the limits/requirements for inhalation dose potential, fissile material, fissile poisoning, organic contribution to flammable vapors, heat generation rate, hydrogen generation rate, and MCU Hazard Categorization. Acceptable characterization methods include sample analysis, process knowledge, or a combination of the two. Laboratory QA practices and sample analysis protocols, as described in Section 5.5.4.2.7, ensure the validity of associated sample results.

Requirements for waste streams sent to other facilities are discussed in Section 5.7.2 (excluding Saltstone Facility Isopar® L/salt solution temperature and DWPF pH/cesium concentration requirements stated in Section 5.5.4.2.15.2). Requirements for DWPF Isopar® L are discussed in Sections 5.5.4.2.15.2 and 5.7.2. Instrumentation used for monitoring MCU process parameters for compliance with DWPF and Saltstone Facility limits (SHT density, Strip Effluent Coalescer differential pressure / pump discharge pressure, DSS Coalescer differential pressure / pump discharge pressure, Strip Feed Tank level indication, and Strip Feed flowmeter) are IPI equipment as described in Section 5.5.4.2.7. Functionality of the instrumentation utilized for monitoring Tank 50 average bulk waste temperature for compliance with the Saltstone Facility salt solution temperature limit requirements is assured via the appropriate surveillances in LCO 3.8.14 (see Section 5.5.2.14).

The Distributed Control System function for comparing the Strip Feed Tank volumetric depletion rate to the Strip Feed flow meter is performed by software developed and installed in accordance with Production Support requirements per Procedure Manual E7 (Ref. 54) and Procedure Manual 1Q (Ref. 49). Additional software requirements (e.g., development of a Design Description for Software, software tests, independent reviews, configuration management) are performed in accordance with the Liquid Waste Process Control Software Quality Assurance Plan (Ref. 79).

5.5.4.2.15.4 SAC Evaluation

The Waste Compliance Plan (WCP) specifies the actions and technical evaluations that ensure that the functional requirements of the WAC are met. Periodic sampling of waste receipt tanks (as part of the Corrosion Control Program as described in Section 5.5.4.2.13) gives additional assurance that the safety function of this SAC is met.

Calculations require independent verification and are performed in accordance with established procedures. For requirements associated with the MCU process, independent verification is required for SEHT sampler alignment to ensure the correct tank is sampled. Prior to the initiation of a Tank 50 to Saltstone Facility inter-area transfer, second person verification shall be performed to ensure Tank 50 average bulk waste temperature is less than or equal to 40°C, adjusted for instrument uncertainty.

The following features provide independence or diversity associated with the MCU process for compliance with DWPF and Saltstone Facility limits:

- SHT density monitoring and SHT sampling
- Strip Effluent Coalescer differential pressure and pump discharge pressure monitoring
- DSS Coalescer differential pressure and pump discharge pressure monitoring
- SEHT and DSS Hold Tank verification sampling

5.5.4.2.16 CONNECTOR INSTALLATION PROGRAM (ADMINISTRATIVE CONTROL 5.8.2.16)

Programmatic controls shall be implemented to ensure the proper installation of SC and SS jumper connectors (e.g., Hanford, Grayloc®). The program shall specify the required controls for installation and tightening of jumper connectors.

This program is designated as a Programmatic Controls Administrative Control. Although this program is part of a first level of control or bounding condition in DBAs, the program provides a support function to aid in verifying and maintaining safety SSC integrity. Additionally, this program does not involve time critical operator actions. Therefore, this program does not warrant identification as a SAC.

5.5.4.2.17 CHEMICAL INVENTORY CONTROL PROGRAM (ADMINISTRATIVE CONTROL 5.8.2.17)

A Chemical Inventory Control Program shall be established. The program shall provide control over new materials brought into the facility. The program shall ensure that chemicals analyzed are maintained within the levels assumed in the analyses (documented in Table 3.3-5).

Chemicals and/or chemical inventories supporting processes within the CSTF whose inventory exceed the maximum chemical inventory or change the storage location listed in Table 3.3-5 shall not be accepted unless the appropriate evaluations (i.e., Consolidated Hazard Analysis and USQ reviews) have been performed and approved prior to receipt in the CSTF.

Chemicals and/or chemical inventories supporting processes within the CSTF whose inventory is not listed on Table 3.3-5 and meets any of the following criteria shall not be accepted unless the appropriate evaluations (i.e., Consolidated Hazard Analysis and USQ reviews) have been performed and approved prior to receipt in the CSTF:

- Exceed the Reportable Quantity (RQ) of 40 CFR 302.4 (Ref. 84), the Threshold Planning Quantity (TPQ) of 40 CFR 355 (Ref. 85), or the Threshold Quantity (TQ) of 29 CFR 1910.119 (Ref. 86) and 40 CFR 68 (Ref. 87), or
- Chemicals that do not have a RQ, TPQ, or TQ, but are considered hazardous based on engineering judgment (e.g., chemical has an NFPA 704 health hazard rating greater than two, the quantity of chemical is not lab scale, the chemical is not commonly available to the public for unrestricted use).

This program is designated as a Programmatic Controls Administrative Control. Although this program is part of a bounding condition in DBAs, the program provides a broad safety management function to prevent introduction of unanalyzed chemicals in the Facility. Therefore, this program does not warrant identification as a SAC.

5.5.4.2.18 HIGH-EFFICIENCY PARTICULATE AIR FILTER PROGRAM (ADMINISTRATIVE CONTROL 5.8.2.18)

The HEPA Filter Program shall ensure replacement of HEPA filters (including roughing filters) prior to exceeding the analyzed radiological loading associated with the HEPA filter. Roughing filters do not have to be tested for radiological loading. Since any roughing filter with the potential for significant radiological loading is located adjacent to a HEPA filter, any roughing filter radiological loading of concern would be detected during periodic HEPA filter monitoring.

This program is designated as a Programmatic Controls Administrative Control. Although specified as a bounding condition in the DBAs (radiological loading), this control is within the normal aspects of Procedure Manual 5Q. This program provides a broad safety management function which is contained in organizational procedures. Therefore, this program does not warrant identification as a SAC.

5.5.4.2.19 SLUDGE CARRYOVER MINIMIZATION PROGRAM (SPECIFIC ADMINISTRATIVE CONTROL 5.8.2.19)

5.5.4.2.19.1 <u>Safety Function</u>

The safety function of this SAC is to protect the bounding initial assumption of a maximum 1 wt. % sludge carryover for supernate and evaporator feed/bottoms transfers (Section 3.4.1.5.6).

This SAC protects bounding initial assumptions (e.g., Material at Risk [MAR]) for applicable Chapter 3 events. This SAC serves an SC/SS function for Chapter 3 accidents.

5.5.4.2.19.2 SAC Description

Suction of transfer devices (pumps and jets) shall be a minimum of 24 inches from the sludge layer to minimize sludge entrainment during supernate and evaporator feed/bottoms transfers to ensure compliance with the supernate and evaporator feed/bottoms inhalation dose potential discussed in Chapter 3.

The program shall include evaluation of the following phenomena and implementation of additional controls as necessary:

- Effects of receiving Waste Transfer(s) concurrent with an outgoing supernate transfer (i.e., the quadrant of the tank receiving the incoming transfer will be considered in relation to the quadrant of the outgoing pump suction)
- Tank Agitation (i.e., no tank agitation permitted during a supernate transfer)

Transfers not meeting this program are considered Sludge Slurry Transfers.

Additionally, the Sludge Carryover Minimization Program defines the periodicity of sludge level measurements based on the level of activity of the waste tank (e.g., transfers in/out, agitation via mixing devices).

This program was designated a SAC because it cannot be implemented with engineered controls. Adequate safety margin is ensured via this separation requirement as discussed in Reference 9 and in Section 3.4.1.5.6. Additionally, the derivation of the assumed 1 wt. % solids carryover in supernate and evaporator feed/bottoms transfers is sufficiently conservative (see Section 3.4.1.5.1) to account for:

- Differences between sludge level measurement location and jet/pump suction location
- Uncertainties in sludge level measurements
- Uncertainties in telescoping jet/pump suction location (conservatism exists during jet/pump placement due to the physical manipulation required to affect a small change in jet/pump suction height [i.e., the positioner must be manually turned several times to move the jet/pump one inch])

Equipment relied upon to implement this SAC includes sludge level measurement devices and laboratory analysis equipment. This equipment is described in more detail in Sections 2.4.1 and 5.5.4.2.7.

5.5.4.2.19.3 Functional Requirements

Sampling and analysis associated with this SAC, as well as the determination of settled sludge / slurried sludge level, data entry, and control of pump/jet suction location are routine tasks and are governed by existing procedures, training, design control/configuration management practices. The Configuration Management Program and design control process plays a major role in the physical establishment and maintenance of the level of transfer devices in relation to the sludge layer.

Settled sludge and slurried sludge level can be determined by measurement, visual inspection, or by engineering evaluation. Engineering shall identify the selected methodology. Soundings provide direct measurement using a tape with a wafer (for settled sludge) by comparison to the known elevation of the riser being used. Turbidity meters provide direct measurement of the slurried sludge level by comparison to the known elevation of the riser being used. Visual inspections may be by direct observation or via camera by comparison to the known waste tank component elevations. Use of an engineering evaluation for settled sludge / slurried sludge level determination shall address applicable parameters described below. Sludge level is used to determine the required pump/jet suction location.

When selected, engineering evaluations for settled sludge / slurried sludge level determination shall address the following attributes, as applicable, for the specific waste tank:

- Process knowledge (e.g., transfer history, operational conditions)
- Historical settled sludge / slurried sludge level determinations
- Waste tank sample results
- Uniformity of the solids level (settled sludge / slurried sludge), as described below

It is recognized that the solids layer (settled sludge / slurried sludge) level within a waste tank may not be at a uniform level across the tank (e.g., layer slopes downward from one side of the tank). The engineering evaluation shall consider this in determining the solids layer volume from the level determination. Although the highest measured or visually determined value may be used to define the level of the entire layer, this may produce an unreasonably conservative value for use in determining the required pump/jet suction location. Known parameters of the layer (e.g., approximate slope of a settled sludge layer, mapping) may be utilized to estimate a more reasonable actual level of the layer in relationship to determining the required pump/jet suction location.

The functionality of turbidity meters is assured by an operational check prior to use. Laboratory QA practices and sample analysis protocols, as described in Section 5.5.4.2.7, ensure the validity of associated sample results.

5.5.4.2.19.4 <u>SAC Evaluation</u>

Settled sludge / slurried sludge level determinations are performed and the results are entered into operating procedures. Engineering review is performed in accordance with facility procedures. Data is entered into Waste Characterization System (WCS) in accordance with the WCS Control Program requirements. Prior to waste tank to waste tank transfers, sludge level data is evaluated against the Sludge Carryover Minimization Program separation criterion as a part of the transfer evaluation and approval procedure. Additionally, for transfers that do not meet the Sludge Carryover Minimization Program separation criterion, receipt waste tanks are evaluated for entry into the Spontaneous Liberation Protection portion of the Waste Tank Quiescent Time Program (see Section 5.5.4.2.28).

Uncertainties in sludge level determination and pump/jet placement are conservatively accounted for in the margins discussed above. The calculations performed to determine sludge level and

the verification of distance separation between sludge level and pump/jet suction location require independent verification.

5.5.4.2.20 SOFTWARE CONTROL PROGRAM (ADMINISTRATIVE CONTROL 5.8.2.20)

Software programming associated with safety-related SSCs shall be controlled by a program, which includes the following:

- Initiation by Design Change
- Implementation phase
- Load Procedures
- Software Validation
- In-service Testing
- Access for Software Loads Controlled

This program is designated as a Programmatic Controls Administrative Control. This program provides support to SSCs used as a first level of control. However, this program is part of a broad safety management program and does not warrant identification as a SAC.

5.5.4.2.21 TRANSFER CONTROL PROGRAM (SPECIFIC ADMINISTRATIVE CONTROL 5.8.2.21)

5.5.4.2.21.1 Safety Function

The safety function of this SAC is to protect bounding conditions or serve as a first level of control within the accident analyses.

The Transfer Control Program is credited in the following Chapter 3 accidents:

- Evaporator Overflow, Leaks, and Spills (Section 3.4.2.3)
- Transfer Facility Fire (Section 3.4.2.5)
- Transfer Line and Transfer Line/Jacket Encasement Explosions (Section 3.4.2.6)
- Transfer Facility Explosions (Section 3.4.2.7)
- Pump Pit and Pump Tank Explosion (Section 3.4.2.8)
- Transfer Error/SMP Waste Release (Section 3.4.2.9)
- Aerosolization Events (Section 3.4.2.10)
- Waste Tank Explosion (Section 3.4.2.11)
- Waste Tank Annulus Explosion (Section 3.4.2.12)
- Waste Tank/Pump Tank Overheating (Section 3.4.2.13)
- Seismic Event (Section 3.4.2.18)

This SAC serves an SC/SS function for these Chapter 3 accidents.

5.5.4.2.21.2 SAC Description

A Transfer Control Program shall be established governing facility-initiated Waste Transfers and transfers into and out of Tank 50. For inhalation dose potential requirements, an analytical uncertainty of 2 Sigma shall be included (additional information and exceptions are described in Section 5.3). Items 4, 6, 7, 8, 9, 12, and 13 are not part of the SAC (justification provided below).

The program shall include the following attributes (additional details on the criteria/methodology are identified in the referenced DSA section):
[Only items 4, 7, 8, 9, 11, and 18 apply to Contingency Transfer System transfers; only items 7, 8, 11, 20, and 21 apply to transfers into and out of Tank 50.]

1. Prior to transfer initiation, determine the type of transfer. This evaluation will distinguish between High-Rem Waste Transfers, Low-Rem Waste Transfers, Chemical Cleaning Transfers, ESP Sludge Slurry transfers, or Sludge Slurry Transfers (see Section 3.4.1.5.1) for planned transfers. F-Area Tank Farm Sludge Slurry Transfers shall be less than or equal to 16.7 wt. % sludge-solids or have an inhalation dose potential that meets the Low-Rem Waste Transfer criteria (as determined by engineering evaluation).

2. Prior to transfer initiation, determine the Transfer Path and Leak Detection Locations needed to support the transfer. Implementing procedures shall address identification of sound isolation points as part of Transfer Path determination.

   This evaluation will also ensure the transfer line segments associated with the Transfer Path and piping downstream of the isolation point (excluding segments designated as Out-of-Service) have acceptable integrity and meet the Chapter 4 requirements prior to initiating the transfer.

   An evaluation for tank riser leak detection shall be performed for the associated Transfer Path for High-Rem Waste Transfers. This evaluation shall be based on the availability/adequacy of the tank riser drain (i.e., drain/riser design is such that the riser will not overflow even in the event of a complete line break). The identified Leak Detection Locations shall comply with the requirements of LCO 3.7.10.

3. Sludge Slurry Transfers out of Tanks 33 and 34 when the suction of the transfer device (pump or jet) is below the sludge layer shall be verified by sampling to meet the Low-Rem Waste Transfer criteria (see Section 3.4.1.5.1).

4. Waste Transfers shall be monitored periodically for indications of transfer events (i.e., transfer error, siphoning, and leakage). Monitoring shall extend beyond the Transfer Path to locations (e.g., pump tanks and waste tanks) determined by evaluation. The evaluation to determine the monitoring locations beyond the Transfer Path shall consider the isolation method used to define the Transfer Path

(e.g., non-leak tested valve versus leak-tested valve, double valve isolated, or blanked). The frequency and method (e.g., level/leak monitoring) of transfer monitoring and material balances for a transfer shall be determined on an individual basis and shall be commensurate with the transfer rate and transfer type (batch versus continuous).

Waste Transfers with the potential to transfer material in amounts greater than 15,000 gallons require material balances. In general, increased monitoring frequency is appropriate during the initial stages of the transfer, with a lesser frequency required once a transfer has been established. Material balances are not required for Contingency Transfer System transfers, or Waste Transfers involved with feed to and receipt from an evaporator. Contingency Transfer System transfers are transfers of waste from the annulus of a leaking waste tank back to the primary side of the same waste tank using the Contingency Transfer System. Material balances are required for evaporator recycle transfers.

5. Deleted

6. Prior to transfer initiation, a siphon evaluation shall be performed. The evaluation shall identify the potential for siphons and identify methods/equipment needed to stop siphons.

7. Prior to transfer initiation, a transfer pump speed evaluation shall be performed. The evaluation shall identify the potential for over-pressurization of the Transfer Path (exceeding system design pressure) or exceedance of Transfer Path flow rate limitations and identify methods/equipment needed to prevent the identified potential.

   A Variable Frequency Drive (VFD) speed setting (or operating speed for single speed pump) check shall be performed prior to any liquid transfer using a transfer pump. The check shall ensure that the maximum speed setting /operating speed is less than or equal to the value allowed to protect the most limiting of the following:

   - Ensure system design pressure (or pressure permitted by an approved engineering evaluation) is not exceeded.

   - Ensure flow rate is less than or equal to 360 gpm at the first above-ground leak location (the point of lowest system resistance that results in leakage outside the tank, assuming a guillotine break of the piping).

   - Ensure flow rate is less than or equal to 250 gpm for the intended Transfer Path (assuming intact path).

   If the required VFD speed setting (or operating speed for single speed pump) could cause the transfer system design pressure to be exceeded, an engineering evaluation shall be completed and provided to DOE.

Reference 77 evaluated IW and flush water system pumps that can exceed transfer system design pressure. Based on this evaluation, operation of these pumps is acceptable and will not cause over-pressurization of the transfer system (pressures are within code allowable pressure).

8. Prior to transfer initiation, a water hammer evaluation shall be performed. The evaluation shall identify the potential for water hammer and identify methods/equipment needed to prevent water hammer.

9. Prior to transfer initiation, independent verification of correct Transfer Path alignment shall be completed. After initiating the transfer, use of correct motive force shall be independently verified.

10. Within 30 days of completing a Waste Transfer, a sufficient flush of the core pipe shall be performed such that the inhalation dose potential of the residual waste in the core pipe is less than or equal to 3.5E+07 rem/gal.

    If an evaluation indicates that the inhalation dose potential of the residual waste in the core pipe is less than or equal to 3.5E+07 rem/gal, flushing is not required. If flushing is required, the necessary flush volume and duration shall be determined. Flushing is not required if the time between transfers is less than 30 days (the 30-day completion time for the flush shall be based on completion of the last transfer).

11. Prior to transfer initiation, procedures shall identify (including staging requirements) the functional equipment needed to stop transfers and siphons.

    For High-Rem Waste Transfers, an evaluation of the associated transfer isolation valves shall be performed to ensure that the ability to stop transfers is maintained. If the isolation valve for a transfer has a Teflon® seat, the evaluation shall include what, if any, additional measures need to be taken.

    For transfers into and out of Tank 50, equipment to stop a siphon is not required. Additionally, equipment to stop transfers is not required for transfers into waste tanks for the following:

    - Batch transfers less than 15,000 gallons (i.e., sending vessel is less than 15,000 gallons and does not have continuous makeup capability). The liquid source system shall be considered to have continuous makeup capability if the system has an automatic fill provision that is not electrically or mechanically isolated. The electrical or mechanical isolation shall contain two independent means of isolation (e.g., two isolation valves; one isolation valve and open disconnect for liquid source transfer pump). Liquid additions to the waste tank from the Dissolution Water Skid do not have continuous makeup capability as described in Section 3.4.1.5.2.

- Siphons/lifts/pump-outs of the contents of an evaporator pot (if the evaporator feed pump is secured)

- Contingency Transfer System transfers

Stopping an unintended siphon shall be completed as soon as practical based on plant conditions through the use of the appropriate transfer procedure (typically accomplished by closing appropriate waste transfer valves). Once the siphon has been stopped, the need for a rapid response is no longer required and breaking the siphon is not time dependent.

12. Prior to transfer initiation of a High-Rem Waste Transfer, procedures shall identify two physically separated functional transfer isolation devices, each capable of stopping the transfer. The transfer isolation devices shall be sufficiently separated (by distance) such that the availability of one isolation device is maintained.

13. Prior to transfer initiation of a Waste Transfer, verification of available waste tank space shall be performed.

14. Within 30 days of completing ESP Sludge Slurry transfers, a three line volume flush of the core pipe shall be performed.

    Flushing is not required if the time between transfers is less than 30 days (the 30-day completion time for the flush shall be based on completion of the last transfer).

15. ESP Sludge Slurry transfers shall only be transferred along the leak-checked paths shown in Chapter 3, Figure 3.7-1.

16. Prior to jetted transfer initiation, independent verification of jet discharge path valves being open shall be completed (for jets with a 3-way valve, valve position will be in the discharge or receipt position, as applicable).

17. Prior to jetted transfer initiation from waste tanks or pump tanks where the possibility of core pipe pluggage due to salt precipitation exists, a sufficient flush (or drain) to prevent pluggage of the core pipe shall have been completed. Flushing is not required for subsequent jetted transfer initiation if the suspension time is within the requirements of the engineering evaluation (evaluation shall include the amount of time the transfer may be suspended before flushing is required).

18. Actual Missing Waste shall be less than or equal to 5,000 gallons. If Actual Missing Waste is greater than 5,000 gallons, then the affected Waste Transfers shall be terminated immediately.

    Actual Missing Waste is Waste Transfer material which is outside the primary containment boundaries of the planned Transfer Path and is confirmed by instrumentation or visual inspection. Actual Missing Waste does not apply to

non-waste material which is outside the primary containment boundaries of the planned Transfer Path during activities which are classified as a Waste Transfer due solely to siphon potential. For this exclusion, it shall be confirmed that no material was siphoned from a waste tank or pump tank.

Actual Missing Waste will be determined by performance of an engineering evaluation if indications or installed instrumentation are not available to determine the amount of missing waste. This evaluation will determine the source of the waste and will be confirmed through the use of alternate instrumentation, observations, or calculations.

19. Material balance discrepancies shall be less than or equal to 15,000 gallons. If material balance discrepancies are greater than 15,000 gallons, then the affected Waste Transfers shall be terminated immediately.

    Re-zeroing of material balances may be completed prior to reaching the applicable transfer procedure shutdown criteria and shall include a documented technical basis. The primary means of re-zeroing shall be accomplished by verifying no indications of a waste leak in the leak detection equipment (for Low-Rem Waste Transfers) or the Leak Detection Locations (for High-Rem Waste Transfers). Video inspection of the interior of the sending and receipt tanks for the presence of salt/sludge mounds may be utilized and if salt/sludge mounds exist, the material balance may be re-zeroed.

20. Prior to initiating a transfer through HDB-7, isolation (single leak-tested valve, double valve isolation, blank, or jumper removal) shall be established in HDB-7 to preclude waste from entering the Tank 50 VB except during intended transfers from HDB-7 through the Tank 50 VB.

21. Prior to initiating a transfer from Tank 50, isolation (single leak-tested valve, double valve isolation, or blank) shall be established in the Tank 50 VB to preclude Tank 50 material from entering HDB-7 and HDB-8 [via the Effluent Treatment Project (ETP) DB].

22. Prior to initiation of a High-Rem Waste Transfer through an H-Area transfer facility, the transient fire loading energy contribution in the affected transfer facility shall be verified to be less than or equal to 630,000 British Thermal Units (approximately 79 lb_{wood} equivalent).

This program was designated a SAC due to the variety of requirements, which cannot be performed by an SSC. Items 4, 18, and 19 protect controls for DWPF transfers as stated in Section 5.7.2.1.

Items 4, 6, 7, 8, 9, 12, and 13 do not warrant identification as a SAC based on the following:

Item 4 – Control provides the programmatic control for the monitoring; however, additional Transfer Control Program controls (Items 18 and 19) provide the protection of the bounding condition/requirement.

Items 6, 7, and 8 – Control provides a support function to aid in maintaining safety SSCs and evaluations are performed in accordance with established site engineering processes (Procedure Manual E7) and are incorporated into facility procedures. Additionally, these evaluations do not involve time critical operator actions.

Item 9 – Control supports a second level of control for DBAs; however, due to other items in the Transfer Control Program (Items 1 and 2), the control does not warrant identification as a SAC.

Item 12 – Control addresses a vulnerability to assure availability of an isolation device; however, the control is not part of a first or second level of control or bounding condition in DBAs.

Item 13 – Control is a second level of control and is not part of a bounding condition in DBAs. The first level of control (HLLCP) is very robust and the HLLCP setting accounts for 15,000 gallons of maximum missing waste.

Equipment relied upon to implement this SAC (with corresponding DSA description section), dependent upon the particular control, includes the following:

- Laboratory analysis equipment (Section 5.5.4.2.7)
- DB ventilation system (including flow indication and HEPA filter) (Section 2.4.4.2)
- DB jet steam/air isolations (Section 2.4.4.5)
- Inhibited Water System (including flow/amount indication) (Section 2.8.2.6)
- Flush Water System (including flow/amount indication) (Section 2.8.2.4)
- Transfer line isolation valves (Section 2.4.4)
- Transfer device breakers/disconnects (Section 2.4.4)
- Transfer lines (Section 2.4.4)
- Equipment to stop transfers and siphons
- Waste tank level measurement devices (Section 2.4.1.3)
- Sludge level measurement devices (Section 2.4.1.3)
- Secondary containment conductivity probes and dip tubes (Section 2.4.4)
- HLLCPs (Section 2.4.1.3)
- Inspection cameras

Adequate conservatism exists for controls within this SAC based on the following:

- Methodology for establishing the 16.7 wt. % sludge-solids and Low-Rem Waste Transfer criteria (see Section 3.4.1.5.1 and Ref. 9)
- Methodology for Sludge Slurry Transfers (Items 1 and 3) with the jet/pump suction at the sludge layer has been shown to be within the Low-Rem Waste Transfer criteria in Reference 74. To account for the unevenness of the sludge layer and potential sludge mounding in a waste tank, it was demonstrated that with the jet/pump suction 38 inches below the sludge layer (using actual worst-case sludge tank contents), the inhalation dose potential would be within the Low-Rem Waste Transfer criteria for a 15,000-gallon transfer volume. Furthermore, to account for variability in the determination of the suspended sludge layer, it was demonstrated that with the jet/pump suction 24 inches below the suspended solids layer (using actual worst-case sludge tank contents), the inhalation dose potential would be within the Low-Rem Waste Transfer criteria for a 2,000-gallon transfer volume. Reference 74 also performed sensitivity analyses involving jet/pump location and varying types of sludge (i.e., suspended and settled solids).

  This derivation is sufficiently conservative to account for:

  a) Differences between sludge level measurement location and jet/pump suction location
  b) Uncertainties in sludge level measurements
  c) Uncertainties in telescoping jet/pump suction location (conservatism exists during jet/pump placement due to the physical manipulation required to affect a small change in jet/pump suction height [i.e., the positioner must be manually turned several times to move the jet/pump one inch])
- Completion time for performance of Items 10 and 14 is 30 days whereas the time to the Lower Explosive Limit (LEL) is greater than 100 days in the core pipe. The time to LEL for Bounding Sludge Slurry was determined to be approximately 421 days for a hydrogen generation rate of 1.5E-05 ft^3/gal-hr (Ref. 66). ESP Sludge Slurry has a bounding hydrogen generation rate of 5.0E-05 ft^3/gal-hr which, using the methodology of Reference 66, produces a time to LEL of approximately 30% of Bounding Sludge Slurry, but still in excess of 100 days.
- Methodology for performing evaluations for core pipe pluggage due to salt precipitation (Item 17) are conducted in a manner to ensure either the solution does not reach supersaturation conditions (i.e., precipitation is completely avoided) or that the amount of precipitation is insignificant and would not challenge full-pipe pluggage.
- Actual Missing Waste value stated in Item 18 (5,000 gallons) is significantly below the 15,000 gallons for maximum missing waste used in analysis. Additionally, analyses that used the 15,000 gallons for maximum missing waste were based on High-Rem material, whereas most transfers are Low-Rem.
- Item 19 is based on indicated values of missing waste (not Actual Missing Waste)

5.5.4.2.21.3 Functional Requirements

The following assures functionality of equipment used for this SAC (excludes equipment covered by Chapter 4 or the TSR):

- Laboratory analysis equipment (Section 5.5.4.2.7)
- Waste tank reel tapes and radar - NMMP (Section 5.5.4.2.9)
- Turbidity meters - operational check prior to use
- Inhibited Water System flow/amount indication - NMMP (Section 5.5.4.2.9)
- Flush Water System flow/amount indication - NMMP (Section 5.5.4.2.9)
- Secondary containment dip tubes - NMMP (Section 5.5.4.2.9)
- Pump tank dip tubes – NMMP (Section 5.5.4.2.9)

Transfer line isolation valves are credited equipment used to stop transfers/siphons (Item 11 of Section 5.5.4.2.21.2). They are reliable, SC components as described in Section 4.3.3. Therefore, functionality of the valve(s) specified in the procedure to stop a transfer/siphon is proven by opening the valve(s) when initially establishing the Transfer Path. This provides assurance that the valve(s) is capable of being manipulated and, in the event of a transfer error/siphon, will provide a credited method to stop the flow of waste.

Sampling and analysis associated with this SAC, as well as the determination of settled sludge / slurried sludge level, data entry, and control of pump/jet suction location are routine tasks and are governed by existing procedures, training, design control/configuration management practices. The Configuration Management Program and design control process plays a major role in the physical establishment and maintenance of the level of transfer devices in relation to the sludge layer.

Settled sludge and slurried sludge level can be determined by measurement, visual inspection, or by engineering evaluation. Engineering shall identify the selected methodology. Soundings provide direct measurement using a tape with a wafer (for settled sludge) by comparison to the known elevation of the riser being used. Turbidity meters provide direct measurement of the slurried sludge level by comparison to the known elevation of the riser being used. Visual inspections may be by direct observation or via camera by comparison to the known waste tank component elevations. Use of an engineering evaluation for settled sludge / slurried sludge level determination shall address applicable parameters described below. Sludge level is used to determine the required pump/jet suction location.

When selected, engineering evaluations for settled sludge / slurried sludge level determination shall address the following attributes, as applicable, for the specific waste tank:

- Process knowledge (e.g., transfer history, operational conditions)
- Historical settled sludge / slurried sludge level determinations
- Waste tank sample results

- Uniformity of the solids level (settled sludge / slurried sludge), as described below

It is recognized that the solids layer (settled sludge / slurried sludge) level within a waste tank may not be at a uniform level across the tank (e.g., layer slopes downward from one side of the tank). The engineering evaluation shall consider this in determining the solids layer volume from the level determination. Although the highest measured or visually determined value may be used to define the level of the entire layer, this may produce an unreasonably conservative value for use in determining the required pump/jet suction location. Known parameters of the layer (e.g., approximate slope of a settled sludge layer, mapping) may be utilized to estimate a more reasonable actual level of the layer in relationship to determining the required pump/jet suction location.

5.5.4.2.21.4 <u>SAC Evaluation</u>

The actions of this SAC are considered to be routine tasks using existing procedures, and no unique human factors considerations exist beyond those described in Chapter 13 and Reference 65. Stopping an unintended siphon shall be completed as soon as practical based on plant conditions through the use of the appropriate transfer procedure. Once the siphon has been stopped the need for a rapid response is no longer required, thus the breaking of the siphon is not time dependent.

Settled sludge / slurried sludge level determinations are performed and the results are entered into operating procedures. Engineering review is performed in accordance with facility procedures. Data is entered into WCS in accordance with the WCS Control Program requirements. Prior to waste tank to waste tank transfers, sludge level data is evaluated against the Sludge Carryover Minimization Program separation criterion as a part of the transfer evaluation and approval procedure. Additionally, for transfers that do not meet the Sludge Carryover Minimization Program separation criterion, receipt waste tanks are evaluated for entry into the Spontaneous Liberation Protection portion of the Waste Tank Quiescent Time Program (see Section 5.5.4.2.28).

Uncertainties in sludge level determination and pump/jet placement are conservatively accounted for in the margins discussed above. The calculations performed to determine sludge level and the verification of distance relationship between sludge level and pump/jet suction location require independent verification.

Calculations require independent verification and are performed in accordance with established procedures. Additionally, the isolation requirements stated in Items 20 and 21 of Section 5.5.4.2.21.2 shall be independently verified. The Technical Review process (Ref. 54) for transfer procedures verifies the Transfer Path and Leak Detection Locations stated by Item 2 in Section 5.5.4.2.21.2. For dedicated Transfer Paths, the Technical Review process performs the independent verification function required by Section 5.5.4.2.21.2 Item 9. Laboratory QA practices and sample analysis protocols, as described in Section 5.5.4.2.7, ensure the validity of associated sample results.

The Item 22 transient fire loading energy contribution shall be documented in a calculation and may be performed by a visual inspection prior to close-out of the transfer facility or by an

analysis of video/photograph(s) from a camera inspection. A Fire Protection Engineer shall provide concurrence of the transient fire loading energy contribution calculation. Verification that transient fire loading energy contribution is within limits is performed in accordance with established procedures or engineering evaluation.

During the performance of a transfer line flush (Items 10, 14, and 17 of Section 5.5.4.2.21.2) assurance that the flush water is being routed to the appropriate Transfer Path shall be achieved through positive confirmation of a level change in the receipt vessel consistent with the derived flush volume. For situations where the required volume of the flush is such that the measuring device may not indicate an adequate change in level (e.g., small volume flush to a waste tank), the following items shall be performed to ensure flush completion:

- Initial flush water valve position verification can be performed using the respective Flush Water System's alignment checklist. Subsequent flush water valve positioning is controlled in accordance with the corresponding procedure. Flush water valve(s) in the defined Transfer Path shall be independently verified.
- Confirm the level change in the sending vessel is consistent with the derived flush volume.

Piping branches off of the Transfer Path which did not have direct transfer flow through them (e.g., piping dead legs) are not required to have direct flush flow through them during the flushing requirements (Items 10, 14, and 17 of Section 5.5.4.2.21.2). This is considered acceptable to meet the safety functions of the flushes based on the following:

- Transfer routes are normally sloped to a low point and the low points of the transfer route are typically drained after a transfer.
- Flow of transfer related material into piping branches would be limited.
- Flushing flowpaths are the same (or nearly the same) as the Transfer Paths. Thus the piping branches will have exposure to the flush liquid, thereby providing a degree of dilution due to flow turbulence and diffusion.

Aspects that allow verification of safety functions within this SAC include monitoring of DB ventilation flowrates per applicable LCOs or roundsheets (Item 5), monitoring of DB ventilation HEPA filters per Section 5.5.4.2.47 (Item 5), and monitoring performed by transfer procedures for transfer related events (see Section 3.4.1.5.2 for multiple means available).

5.5.4.2.22 FLAMMABLE VAPOR SAMPLING PROGRAM (ADMINISTRATIVE CONTROL 5.8.2.22)

Programmatic controls shall be established governing vapor space hydrogen sampling of the transfer line jackets and encasements to mitigate the Transfer Line Jacket/Encasement Explosion event (Section 3.4.2.6). Vapor space sampling is required, prior to transfer initiation and following each waste transfer of material with an inhalation dose potential greater than 9.8E+07 rem/gal (for transfer line jackets), and prior to transfer initiation and following waste transfers (for the encasements) through the associated transfer line, as specified by the program. The program shall establish the sampling frequency, location and type of sample, as well as the

number of samples that is considered adequate to ensure that waste has not leaked into the jacket/encasement. The program shall consider the hydrogen generation rate of material being transferred and the volume of waste potentially leaked (less than or equal to 10% of jacket/encasement volume). The program shall also determine when actions are necessary (in addition to the method of action) to prevent the vapor space from becoming flammable.

Programmatic controls shall be established governing flammable vapor sampling of Type IIIA waste tank underliner sumps and Type IV tank leak detection sumps (excluding waste tanks in Closure Mode) to protect an assumed initial condition (Section 3.4.2.12). The program shall ensure that these locations are sampled for flammable vapors at least once per year and shall determine/identify any actions to be taken should high flammable vapor conditions exist.

This program has two attributes and both are designated as a Programmatic Controls Administrative Control. Vapor sampling of the transfer line jackets/encasements is a second level of control and is not part of a bounding condition in DBAs. The first level of control is robust (core pipe integrity) and thus this control does not warrant identification as a SAC. Vapor sampling of the underliner/leak detection sumps is part of a bounding condition in DBAs to ensure that the sumps do not reach LEL. However, based on historical data, none of the sumps reached LFL even though flammable vapors had been allowed to accumulate for an extended period of time (i.e., years) with no purging. Therefore, it is reasonable to conclude that flammable vapors in the sumps will not exceed the LEL. This program performs confirmatory sampling and does not involve time critical operator actions. Therefore, this program does not warrant identification as a SAC.

5.5.4.2.23 TRANSFERS FROM WASTE TANK ANNULI PROGRAM (SPECIFIC ADMINISTRATIVE CONTROL 5.8.2.23)

5.5.4.2.23.1 Safety Function

This SAC is credited as a second level of control for the Waste Tank Annulus Aerosolization Due to Steam Jet Failure event (Section 3.4.2.10) and is also credited as a second level of control for the Waste Tank/Pump Tank Overheating events (Section 3.4.2.13) to provide a HEPA-filtered discharge path during the jetted transfer of the annulus contents. This SAC serves an SS function for these Chapter 3 accidents.

5.5.4.2.23.2 SAC Description

An annulus transfer program shall be established governing Waste Transfers from waste tank annuli. This program shall include, as a minimum, the installation and operation of a negative pressure ventilation system with HEPA filtration prior to transfer initiation of waste from an annulus via a jetted transfer (steam or air). For tanks with a negative pressure annulus, this SAC ensures that, prior to transferring waste from the waste tank annulus via a jetted transfer (steam or air), the annulus ventilation system with HEPA filter is operating. Due to the limited duration and limited applicability of this requirement, equipment upgrades required to implement this control via an engineered safety system were deemed cost prohibitive. Therefore, this control is designated a SAC.

5.5.4.2.23.3 Functional Requirements

The installation of portable ventilation equipment, including operable, tested HEPA filtration is governed by existing procedures. This equipment is required to provide a negative pressure ventilation system and a HEPA-filtered discharge path during the jetted transfer of the annulus contents. Differential pressure instrumentation used to verify negative pressure shall be calibrated prior to use. Additional information regarding this equipment can be found in Section 2.4.1.4.

5.5.4.2.23.4 SAC Evaluation

The pressure drop across the HEPA filter is monitored to assess its loading. HEPA procurement/testing is governed by the site HEPA program (Ref. 55). The time during which this SAC must meet its safety function is minimal because this type of operation has a very limited duration (typically less than 1 hour) and occurs very infrequently. Additionally, ample time exists to setup and operate equipment as the time to LFL is not challenged within 10 days of identification of a leak into a waste tank annulus.

5.5.4.2.24 SEVERE WEATHER RESPONSE PROGRAM (SPECIFIC ADMINISTRATIVE CONTROL 5.8.2.24)

5.5.4.2.24.1 Safety Function

The Severe Weather Response Program serves to secure activities which eliminate certain accident initiators during a Tornado and High Winds Event. The Severe Weather Response Program is credited as the first level of control for the Tornado and High Winds Event in Section 3.4.2.17. This SAC serves an SC function for this Chapter 3 accident.

5.5.4.2.24.2 SAC Description

Upon receipt of a tornado warning, tornado watch, or high wind warning issued by the SRS Operations Center for CSTF, the following actions shall occur:

- Secure liquid transfers [excluding evaporator GDL flushes, in-progress pot lifts/pump-outs (unless the evaporator lift/pump-out is associated with an exposed GDL as the result of an excavation), and in-progress pot siphons]. Securing a transfer includes the following: stopping the prime mover and taking actions to prevent a siphon (e.g., closing siphon isolation valves and opening vent valves).
- Shut down evaporators (secure steam to tube bundles and lances) and secure evaporator feed pumps
- Secure pump tank agitators, waste tank mixing devices, and power to SMPs
- Secure transfer pumps associated with waste tank recirculation

The Severe Weather Response Program is designated a SAC because the equipment upgrades that would be necessary to overcome the vulnerabilities (i.e., lack of tornado/high wind qualified safety-related SSCs) in the existing systems are cost prohibitive. Because the SAC is performed

for watches in addition to warnings, ample response time is inherent in the control, and no additional safety margin is required. Additional information regarding the above equipment is contained in Sections 2.4.1 and 2.5.

During freezing conditions programmatic controls shall be implemented to ensure that SC and SS equipment remains functional. The intent of this program is to supplement (not supersede) other requirements on safety-related equipment. Affected equipment may be removed from service with appropriate compensatory measures (i.e., enter applicable LCO) in lieu of meeting applicable severe weather controls. The freeze protection portion of this control is not part of the SAC and is designated as a Programmatic Controls Administrative Control. The freeze protection portion of the program ensures SC/SS equipment remains functional during freezing conditions. This part of the program provides a support function to aid in maintaining safety SSC functionality and does not involve time critical operator actions. Therefore, the freeze protection portion of this program does not warrant identification as a SAC.

5.5.4.2.24.3 Functional Requirements

This SAC utilizes existing procedures governing shutdown of equipment. The majority of equipment can be shut down from the applicable control room. In addition, several methods of shutting down equipment are available locally.

5.5.4.2.24.4 SAC Evaluation

The actions of this SAC are considered to be routine tasks using existing procedures (especially since the activities are shutdown as a pre-event action), and no unique human factors considerations exist beyond those described in Chapter 13. Local operations involved with securing transfers/preventing siphons take a short period of time (e.g., minutes).

Equipment and operations (e.g., transfers) that are shut down as part of this SAC are verified to be shut down by independent means. For example, tank level stops decreasing after shutdown of a transfer pump. If venting is required to prevent a siphon between the sending and receiving tanks, verification by a second operator (independent or second person verification) is required.

Through performance of walk-through drills and by actual initiation of the governing procedures due to weather watches/warnings, this SAC is shown to adequately perform the safety function.

5.5.4.2.25 EVAPORATOR FEED QUALIFICATION PROGRAM (SPECIFIC ADMINISTRATIVE CONTROL 5.8.2.25)

5.5.4.2.25.1 Safety Function

The safety function of the Evaporator Feed Qualification Program is to ensure that the composition of waste received into the evaporator feed tanks is within analyzed limits.

The Evaporator Feed Qualification Program is credited as a barrier to Criticality (Chapter 6) and as a bounding initial condition in the following Chapter 3 accidents:

- Evaporator Pot Explosion (Section 3.4.2.1)

- Evaporator Cell Explosion (Section 3.4.2.2)
- Evaporator Overflow, Leaks, and Spills (Section 3.4.2.3)
- Evaporator Overpressure (Section 3.4.2.4)
- Tornado and High Winds Event (Section 3.4.2.17)
- Seismic Event (Section 3.4.2.18)
- Wildland Fire (Section 3.4.2.19)

This SAC serves an SC/SS function for these Chapter 3 accidents.

5.5.4.2.25.2 SAC Description

The Evaporator Feed Qualification Program shall ensure that the composition of waste streams received into the 242-16H and 242-25H Evaporator Feed Tanks is within analyzed limits. The composition of waste in the 242-16H and 242-25H Evaporator Feed Tanks shall comply with the hydrogen generation rate limits (Section 3.4.1.5.5) prior to transfer to the evaporator pot. Ensuring that the waste composition is within analyzed limits ensures that the assumptions made in the safety analysis are maintained. These requirements are part of the SAC.

Waste tanks containing DWPF Recycle (or similar waste) shall have a pre-transfer evaluation performed against Criteria 1.1 through 1.5 prior to transfers to the 242-25H Evaporator System. The performance of the pre-transfer evaluation is part of the SAC.

Item 1.6 and Item 4 below are part of the SAC. Item 1, Items 1.1 through 1.5, Item 2, and Item 3 below are not part of the SAC (justification provided below).

1. The program shall contain the attributes listed below to preclude unacceptable uranium bearing/hydrogen producing solids (scale) formation within the 242-25H Evaporator (see Section 5.5.4.2.26 for the 242-16H Evaporator). Criteria 1.1 through 1.5 intentionally allow both the silicon concentration and the calculated solids formation rate for the 242-25H Evaporator System to slowly increase over time. This limited rate of increase in the historical operating range of this evaporator system is acceptable as long as no solids accumulation in the evaporator pot is experienced. The adequacy of, and technical bases for, these attributes is established in References 30 and 31.

   1.1 The average concentration of silicon in the process stream transferred to the evaporator system shall be less than 120% of the historical maximum silicon concentration for feed to the evaporator. Prior to determining the historical maximum silicon concentration, it must be verified that scale formation has not occurred during the operating period.

   This criterion limits the silicon concentration in the transferred waste. This ensures that the silicon concentration in the evaporator system is not suddenly increased by more than 20% outside of its historical range. This delta in silicon concentration represents a doubling of the analytical uncertainty (10% equals one sigma). Since the silicon levels in the evaporator system will be re-baselined only twice a year, the

allowed increases of silicon concentration in the evaporator system will be relatively slow. Visual inspections will ensure that scale formation has not occurred during the operating period for baseline adjustment. Sampling for silicon in the sending tank is not required. Silicon concentrations of the sending tank may be based on engineering evaluations and process knowledge based on previous samples and known additions.

After combining and slurrying the contents of different tanks and once the silicon settling behavior is known, then the same settling behavior may be assumed for sequential slurrying/settling cycles. This is a reasonable assumption because the same solids will be involved in the later slurrying of the sludge batch, and each washing cycle will dilute soluble components of the supernate in the tank. As the supernate becomes more dilute, the specific gravity and viscosity will become lower. Because of this, dilution of supernate will tend to improve settling in the tank. Therefore the silicon concentration in the supernate (following a minimum settling time) and the height of the silicon transition zone above the turbidity interface level as a function of time do not have to be re-confirmed by sampling.

1.2 The calculated sodium aluminosilicate (NAS) formation rate from the combined transfers and the evaporator tank waste shall be less than 110% of the historical maximum formation rate for feed to the evaporator. For the analyses verifying that this attribute is met, it is assumed that the transferred volume mixes with the feed and/or drop tank supernate and the mixture is fed to the evaporator. These analyses also assume a concentration factor of three for the evaporator.

This criterion limits the calculated solids formation rate. This ensures that the solids formation rate for waste in the evaporator system is not suddenly increased by more than 10% outside of its historical range. Since the exact threshold for solids formation rate above which significant solids will accumulate in the evaporator pot is not known, limiting increases to increments of 10% is considered prudent. The analysis for complying with this criterion shall use the methodology described in References 30 and 31. The methodology described in References 30 and 31 provides qualitative predictions of solids formation rate that are adequate to allow comparing current conditions in the evaporator system to the baseline for that system in order to comply with this criterion. For the analysis verifying that this criterion is met, it is assumed that the transferred volume mixes with the feed and/or drop tank supernate and the mixture is fed to the evaporator. These analyses also assume a concentration factor of three for the evaporator.

1.3 For transfers directly into the evaporator feed tank, the free hydroxide concentration of the transferred waste shall be greater than 1 molar (M). Small volumes (i.e., less than 10,000 gallons) of transfer wastes with free hydroxide concentrations less than or equal to 1 M that meet attributes 1.1 and 1.2 may be made into the evaporator feed tank if:

- Feed to the evaporator is stopped prior to initiation of the transfer, and
- Feed is not restarted until at least 24 hours after the transfer is complete.

This criterion prohibits DWPF Recycle (or similar waste) transfers with free hydroxide concentration less than 1 M directly into an evaporator feed tank. This ensures that this type of waste is first transferred through a drop tank. Transfers of small volumes (i.e., less than 10,000 gallons) of DWPF Recycle (or similar waste) transfers with free hydroxide less than 1 M that meet criteria 1.1 and 1.2 may be made into the evaporator feed tank if the feed to the evaporator is stopped prior to the initiation of the transfer and not restarted until at least 24 hours after the transfer is complete. Delaying the restart of the evaporator for at least 24 hours minimizes the likelihood of the low hydroxide waste being fed to the evaporator without some mixing occurring in the feed tank.

1.4 For DWPF Recycle (or similar waste) transfers into the evaporator drop tank, if the free hydroxide concentration is less than or equal to 1 M, then the following requirements shall be met:

1.4.1 The combined contents must be greater than 1 M free hydroxide (based on calculation) prior to transfer to the feed tank.

This criterion ensures that subsequent evaporator recycle transfers of the drop tank waste to an evaporator feed tank is preceded by an engineering evaluation that demonstrates that the combined contents (e.g., initial drop tank waste, low hydroxide waste received, further evaporator bottoms received in the drop tank, and any other transfer receipts into the drop tank) transferred to the feed tank are greater than 1 M free hydroxide.

1.4.2 Evaporator recycle transfers from the drop tank to the feed tank shall be stopped prior to receipt of a low hydroxide transfer. Subsequent evaporator recycle transfers shall not be initiated until completion of the low hydroxide DWPF Recycle (or similar waste) transfer and the conditions of attribute 1.4.3 are satisfied.

This criterion prohibits evaporator recycle transfers from the drop tank to the feed tank during receipt of low hydroxide DWPF Recycle (or similar waste) transfers to ensure that the low hydroxide waste is not removed from the drop tank prior to undergoing any significant mixing.

1.4.3 In addition to 1.4.1 and 1.4.2 above, at least one of the following three conditions must be met:

This criterion ensures that waste fed to the evaporator will have a free hydroxide concentration greater than 1 M to prevent accumulation of low solubility species. To meet the intent of this criterion, at least one of three alternative steps must be performed, each of which either: 1) directly sample the waste of concern to show that it has mixed adequately to increase the hydroxide concentration above 1 M; or 2) maximize the likelihood that sufficient mixing will occur so that DWPF Recycle (or similar waste) transfers are greater than 1 M hydroxide prior to being fed to an evaporator.

1.4.3.a Prior to receiving a low hydroxide DWPF Recycle (or similar waste) transfer, the waste level shall be greater than or equal to 120 inches above the downcomer discharge and the drop tank hydroxide concentration shall be greater than or equal to 4 M.

This alternative requires that the drop tank have a waste level greater than or equal to 120 inches above the downcomer discharge and a hydroxide concentration of greater than or equal to 4 M prior to receipt of the low hydroxide transfer. This ensures that there is sufficient excess hydroxide in the drop tank such that, even assuming limited mixing, the entire tank will be above a concentration of 1 M. When transfers enter the tank at this point, the low hydroxide transfers would tend to rise to the top of the tank liquid due to the relatively low specific gravity of this waste stream. Sufficient hydroxide is expected to be mixed into the DWPF Recycle (or similar waste) transfer stream from the high hydroxide waste in the drop tank such that no supernate in the drop tank would have a hydroxide concentration less than or equal to 1 M following the transfer.

1.4.3.b After receipt of a low hydroxide DWPF Recycle (or similar waste) transfer and prior to the first subsequent evaporator recycle transfer from the drop tank to the feed tank, a supernate sample from the surface of the drop tank shall indicate greater than 1 M hydroxide concentration.

This alternative requires sampling the surface of the drop tank after receipt of a low hydroxide DWPF Recycle (or similar waste) transfer and prior to the first subsequent evaporator recycle transfer from the drop tank to the feed tank. Demonstrating that the waste at the surface has a hydroxide concentration greater than 1 M is adequate to indicate that the entire tank is sufficiently mixed and also has greater than 1 M hydroxide. This alternative is still considered valid in the case where the evaporator has operated between the time of the DWPF Recycle (or similar waste) transfer receipt and the time the sample is drawn. Operation of the evaporator includes lifting evaporator bottoms from the pot and transferring them to the drop tank. Evaporator bottoms enter the drop tank at a discharge point high in the tank vapor space and fall to the surface of the waste. Since typical evaporator bottoms have a relatively high specific gravity (and hydroxide concentration), dropping bottoms into the top of a waste tank with lower specific gravity is an effective method of mixing the supernate in a waste tank sufficiently to ensure that no significant portions of the supernate have a hydroxide concentration less than 1 M.

1.4.3.c After the receipt of a low hydroxide DWPF Recycle (or similar waste) transfer and prior to the first subsequent evaporator recycle transfer from the drop tank to the feed tank, the evaporator shall be operated for a sufficient duration to lift 100,000 gallons of evaporator bottoms to the drop tank.

This alternative requires operation of the evaporator for a sufficient duration to lift 100,000 gallons of evaporator bottoms to the drop tank. This period of evaporator operation must occur after receipt of a low hydroxide DWPF Recycle (or similar waste) transfer in the drop tank and prior to the first subsequent evaporator recycle transfer from the drop tank to the feed tank. Lifting 100,000 gallons of thermally hot high hydroxide, high specific gravity, evaporator bottoms to the drop tank will cause adequate mixing in the drop tank such that the entire tank contents will be greater than 1 M hydroxide.

1.5 A pre-transfer evaluation shall be performed to verify that the tank jet/pump suction is positioned to minimize the disturbance and entrainment of waste from within the unsettled transition layer above the solids/supernate interface, which may contain high concentrations of Al, Fe, Si, U, and Mn.

This criterion requires a pre-transfer engineering evaluation to consider the elevation of the jet/pump suction in the sending tank and the resulting impact of its disturbance of the sludge solids/supernate interface. The jet/pump suction shall be positioned to minimize entrainment of waste containing high concentrations of Al, Fe, Si, U, and Mn. Since the location of the jet/pump suction may have a different effect depending on the physical properties of the waste, it is warranted to consider these attributes in a documented evaluation to establish necessary controls.

1.6 (SAC) If a transfer of DWPF Recycle (or similar waste) into the 242-25H Evaporator System did not meet one or more of the above requirements (1.1 through 1.5), then the evaporator shall be shut down immediately (secure feed pump and secure steam to tube bundle and lance) and not restarted until the requirements have been demonstrated to be met by an engineering evaluation.

This criterion requires an evaporator to be shutdown immediately if an intended or unintended transfer of DWPF Recycle (or similar waste) into the 242-25H Evaporator System (feed tank or drop tank) did not meet the requirements of criteria 1.1 through 1.5. An engineering evaluation must be performed to evaluate the potential for scale formation in the evaporator and determine any corrective actions necessary.

2. An engineering evaluation shall be performed prior to any activities that may distribute DWPF Recycle (or similar waste) to locations that do not contain DWPF Recycle (or similar waste).

This attribute requires an engineering evaluation of CSTF and system status prior to transferring DWPF Recycle or similar waste to unrestricted locations to maintain configuration control and to assess the impact of introducing high-silicon waste into these areas.

3. The silicon concentration and NAS formation rate for the 242-25H Evaporator System shall be determined at least once every six months. The specified frequency is met if this attribute is performed within the 25% interval extension allowance. If the determination has not been performed for the feed tank within the required frequency, then the evaporator shall be shut down immediately (secure feed pump and secure steam to tube bundle and lance) and not restarted until the silicon concentration and NAS formation rate has been determined and evaluated against Criteria 1.1 and 1.2 above. If the determination has not been performed for the drop tank within the required frequency, then the affected drop tank shall not be recycled back to the feed tank until the silicon concentration and NAS formation rate has been determined and evaluated against Criteria 1.1 and 1.2 above.

   This attribute requires that the silicon concentrations and NAS formation rates for the 242-25H Evaporator System be determined at least once every six months. To allow for operational flexibility, the specified frequency is met if this attribute is performed within the 25% interval extension allowance. The intent is to establish baseline values, trend variations over time, and confirm the effectiveness of attribute 1 in limiting silicon and NAS formation increases in the evaporator system. The silicon concentration and NAS formation rate are based on sampling of the feed and drop tanks. Samples shall be drawn from multiple tank elevations.

4. (SAC) Periodic visual inspections of the accessible internal surfaces of the 242-25H Evaporator pot (including evaluation/documentation of the inspection results) shall be performed as follows:

   4.1 Inspect at least once every 2,160 hours (90 days) of evaporator operation, or

   4.2 If a satisfactory evaporator pot siphon is performed every 720 hours (30 days) of evaporator operation, then inspect at least once every 4,320 hours (180 days) of evaporator operation. If siphon flowrate is less than the established baseline, then prior to subsequent evaporator operation a satisfactory siphon must be performed.

   4.3 If inspection results indicate unacceptable accumulation of solids/scale, then waste feed to the evaporator shall be shut down immediately (secure feed pump and secure steam to tube bundle and lance).

   Evaporator operation is considered to be the amount of time steam is supplied to the tube bundle.

   This attribute requires periodic visual inspections of the internal surfaces of the evaporator pot to confirm that the 242-25H Evaporator pot is not experiencing significant accumulation of solids as the operating envelope is expanded. The pot visual inspections include those portions of the evaporator pot internals accessible with a camera. Observation of normal salt

encrustation during the pot visual inspections is not of concern for the purposes of this program.

The time interval between visual inspections may be extended based on the ability to perform a separate gross check for solids in the evaporator pot. This check for solids accumulation consists of establishing a controlled siphon out of the evaporator pot at intervals of approximately every 30 days of evaporator operation. By comparing the siphon flow achieved to that previously obtained under clean pot conditions, some degree of assurance could be obtained that significant amounts of solids have not accumulated since the time of the last visual pot inspection. If a controlled siphon from the evaporator pot has a flowrate less than the established baseline, then prior to subsequent evaporator operation a successful siphon of the evaporator shall be performed.

This program was designated a SAC due to the variety of requirements, which cannot be accomplished using an engineered safety system.

Item 1, Items 1.1 through 1.5, Item 2, and Item 3 do not warrant identification as a SAC based on the following:

Item 1, and Items 1.1 through 1.5 – Although the control could be considered part of a first level of control in DBAs, the control provides a layered approach to minimize scale/solids buildup in the evaporator. Any one control, unto itself, is not a first level of control. Therefore, based on this and the identification of Item 1.6 as a SAC, the control does not warrant identification as a SAC.

Items 2 and 3 – Control pertains to criticality analysis; however, the control is not part of a first or second level of control or bounding condition in DBAs.

5.5.4.2.25.3 Functional Requirements

Sampling, inspection, securing waste feed to the evaporator, and calculations required by this SAC are considered to be routine tasks and described in detail in Section 5.5.4.2.25.2 above and are governed by existing procedures.

5.5.4.2.25.4 SAC Evaluation

Calculations performed to document engineering evaluations per the requirements of this SAC are independently verified. Sample results and inspection results are also independently reviewed. This ensures that the safety function of the SAC is met. Laboratory QA practices and sample analysis protocols, as described in Section 5.5.4.2.7, ensure the validity of associated sample results.

5.5.4.2.26 242-16H EVAPORATOR SCALE EVALUATION (SPECIFIC ADMINISTRATIVE CONTROL 5.8.2.26)

5.5.4.2.26.1 Safety Function

The safety function of the 242-16H Evaporator Scale Evaluation control is to ensure that the quantity of hydrogen producing scale does not exceed established limits, which could result in an explosion.

The 242-16H Evaporator Scale Evaluation control is credited as a bounding initial condition in the following Chapter 3 accidents:

- Evaporator Pot Explosion (Section 3.4.2.1)
- Tornado and High Winds Event (Section 3.4.2.17)
- Seismic Event (Section 3.4.2.18)
- Wildland Fire (Section 3.4.2.19)

This SAC serves an SC/SS function for these Chapter 3 accidents.

5.5.4.2.26.2 SAC Description

The 242-16H Evaporator shall be inspected (including evaluation/documentation of the inspection results) at least once every 4,320 hours (180 days) of evaporator operation for the presence of scale. If inspection results indicate a total volume of accumulated scale greater than 300 gallons (protected by TSR limit of 200 gallons), waste feed to the evaporator shall be shut down immediately and not restarted until the scale volume is reduced below limits.

The methodology for estimating scale volume shall be determined by Engineering. 242-16H Evaporator operation is considered to be the amount of time steam is supplied to the tube bundle, excluding the time steam is supplied to the tube bundle during chemical cleaning.

This control was designated as a SAC because it cannot be performed by an engineered safety system.

Conservatisms that protect the safety function of this SAC include the following: the inspection frequency has sufficient margin based on anticipated growth rates (historical data); the TSR limit (200 gallons) is significantly below the safety analysis value (300 gallons); and the methodology for estimating scale volume has sufficient margin to account for measurement uncertainty.

5.5.4.2.26.3 Functional Requirements

Sampling, inspection, 242-16H Evaporator shutdown, and calculations required by this SAC are considered to be routine tasks and are governed by existing procedures.

5.5.4.2.26.4 SAC Evaluation

The scale inspection results and the scale volume calculation results are independently verified. This ensures that the safety function of the SAC is met.

5.5.4.2.27 FLAMMABILITY CONTROL PROGRAM (SPECIFIC ADMINISTRATIVE CONTROL 5.8.2.27)

5.5.4.2.27.1 Safety Function

The Flammability Control Program protects the assumed times to the LFL (CLFL for Tank 50) in individual waste tanks. It also determines the waste tank flammability classification and minimizes the number of tanks that can become flammable in 24 hours/seven days.

For waste tanks that are in Closure Mode, flammability control is protected by the related Mode entry prerequisites (see Section 5.4.3) and this program does not apply to these waste tanks.

The Flammability Control Program is credited in the following Chapter 3 accidents:

- Waste Tank Explosion (Section 3.4.2.11)
- Tornado and High Winds Event (Section 3.4.2.17)
- Seismic Event (Section 3.4.2.18)
- Wildland Fire (Section 3.4.2.19)
- Loss of Offsite Power (Section 3.4.2.20)

This SAC serves an SC/SS function for these Chapter 3 accidents.

5.5.4.2.27.2 SAC Description

A Flammability Control Program shall be established to protect the assumed times to the LFL (CLFL for Tank 50) in individual waste tanks. Item 6 is not part of the SAC (justification provided below). The program shall at a minimum include the following attributes:

1. Determine and track the time to LFL (CLFL for Tank 50) in each waste storage tank in order to determine the individual waste tank flammability classification (Rapid Generation Tank, Slow Generation Tank, Very Slow Generation Tank, Chemical Cleaning Tank). Document the waste tank flammability classification for each waste storage tank in the ERD (Ref. 46).

   For waste tanks in Acidic Chemical Cleaning Mode, the Flammability Control Program does not calculate the time to LFL (three days) but does ensure these tanks

are classified as Chemical Cleaning Tanks. Discussion related to calculating time to LFL within Section 5.5.4.2.27 is not applicable to waste tanks in Acidic Chemical Cleaning Mode.

For Tank 50 waste tank flammability classification, waste temperature controls are required by LCO 3.8.14 (see Section 5.5.2.14).

The evaluation shall be based upon the hydrogen retention/release and flammable vapor methodologies discussed in Sections 3.4.1.5.3 and 3.4.2.11.1. Dependent upon the more limiting waste tank flammability classification criteria (see Section 3.4.2.11.1), the evaluation shall be based upon the vapor space volume protected by the Tank Fill Limits Program (see Section 5.5.4.2.44) and/or the actual waste contents/inventory (considering incoming transfers). For waste tanks receiving transfers from a sending vessel greater than or equal to 15,000 gallons or has continuous makeup capability, the actual waste contents/inventory shall be adjusted to account for the maximum volume associated with a Transfer Error event (i.e., 15,000 gallons). If the liquid batch source is less than 15,000 gallons and does not have continuous makeup capability, the actual waste contents/inventory shall be adjusted to account for the maximum total volume of the batch source. The liquid source system shall be considered to have continuous makeup capability if the system has an automatic or manual fill provision that is not electrically or mechanically isolated. Liquid additions to the waste tank from the Dissolution Water Skid do not have continuous makeup capability as described in Section 3.4.1.5.2. In lieu of using the actual waste contents/inventory (including consideration of incoming transfers), the evaluation may be based upon the vapor space volume protected by the Tank Fill Limits Program (see Section 5.5.4.2.44).

2. Determine the waste tank hydrogen concentration safety analysis value and hydrogen concentration LFL limit, excluding Tank 50, Very Slow Generation Tanks, and waste tanks in Acidic Chemical Cleaning Mode. The hydrogen concentration LFL limit shall be based on the hydrogen concentration safety analysis value and shall account for potential organics and instrument uncertainties. Document the waste tank hydrogen concentration LFL limit for each waste storage tank in the ERD (Ref. 46).

   Tank 50 and Very Slow Generation Tanks do not use a hydrogen concentration safety analysis value (for evaluations) or hydrogen concentration LFL limit (for LCOs). For Tank 50 evaluations, an initial hydrogen concentration of 3.8% of the LFL or a flammable vapor safety analysis value of 60% of the CLFL is used (see Section 3.4.2.11.1). For waste tanks in Acidic Chemical Cleaning Mode, the Flammability Control Program does not determine the waste tank hydrogen concentration safety analysis value or hydrogen concentration LFL limit. For these tanks, the waste tank hydrogen concentration safety analysis value is 25% of the LFL and the hydrogen concentration LFL limit is covered by Section 5.5.2.16 (LCO 3.8.16).

The hydrogen concentration safety analysis value and hydrogen concentration LFL limit shall be on an individual tank basis accounting for proposed waste tank activities (e.g., trapped gas release activities) as discussed in Sections 3.4.1.5.3 and 3.4.2.11.1.

3. Ensure that it takes a minimum of seven days upon loss of waste tank forced ventilation (based on the methodology for waste tank flammability classification) for the tank bulk vapor space to reach 100% of the LFL (CLFL for Tank 50), excluding Very Slow Generation Tanks and waste tanks in Acidic Chemical Cleaning Mode.

   Very Slow Generation Tanks are shown by calculation to never reach 100% of the LFL. For waste tanks in Acidic Chemical Cleaning Mode, the Flammability Control Program does not control the time to LFL.

   The evaluation shall be based upon the hydrogen retention/release and flammable vapor methodologies discussed in Sections 3.4.1.5.3 and 3.4.2.11.1. Dependent upon the more limiting waste tank flammability classification criteria (see Section 3.4.2.11.1), the evaluation shall be based upon the vapor space volume protected by the Tank Fill Limits Program (see Section 5.5.4.2.44) and/or the actual waste contents/inventory (considering incoming transfers). For waste tanks receiving transfers from a sending vessel greater than or equal to 15,000 gallons or has continuous makeup capability, the actual waste contents/inventory shall be adjusted to account for the maximum volume associated with a Transfer Error event (i.e., 15,000 gallons). If the liquid batch source is less than 15,000 gallons and does not have continuous makeup capability, the actual waste contents/inventory shall be adjusted to account for the maximum total volume of the batch source. The liquid source system shall be considered to have continuous makeup capability if the system has an automatic or manual fill provision that is not electrically or mechanically isolated. Liquid additions to the waste tank from the Dissolution Water Skid do not have continuous makeup capability as described in Section 3.4.1.5.2. In lieu of using the actual waste contents/inventory (including consideration of incoming transfers), the evaluation may be based upon the vapor space volume protected by the Tank Fill Limits Program (see Section 5.5.4.2.44).

4. Determine, track, and ensure that only seven waste tanks can reach 100% of the LFL in less than 24 hours assuming no ventilation and including the effects of post-seismic trapped gas release. Document the waste tank prioritization results (Priority 1 waste tanks) in the ERD (Ref. 46).

   Waste tanks that can reach 100% of the LFL in less than 24 hours based on the criteria above are considered Priority 1 waste tanks (for response prioritization for loss of ventilation events). The waste tank prioritization results documented in the ERD (Ref. 46) are only required to indicate the waste tanks that are considered Priority 1 waste tanks, and need not document the actual time to LFL or ranking of Priority 1 waste tanks.

The evaluation shall be based upon the hydrogen retention/release and flammable vapor methodologies discussed in Sections 3.4.1.5.3 and 3.4.2.11.1. The evaluation shall be based upon the actual waste contents/inventory (considering incoming transfers) and shall consider the solids layers (saltcake, settled sludge, and slurried sludge) available for trapped gas release within the waste tank. For waste tanks receiving transfers from a sending vessel greater than or equal to 15,000 gallons or has continuous makeup capability, the actual waste contents/inventory shall be adjusted to account for the maximum volume associated with a Transfer Error event (i.e., 15,000 gallons). If the liquid batch source is less than 15,000 gallons and does not have continuous makeup capability, the actual waste contents/inventory shall be adjusted to account for the maximum total volume of the batch source. The liquid source system shall be considered to have continuous makeup capability if the system has an automatic or manual fill provision that is not electrically or mechanically isolated. Liquid additions to the waste tank from the Dissolution Water Skid do not have continuous makeup capability as described in Section 3.4.1.5.2. In lieu of using the actual waste contents/inventory (including consideration of incoming transfers), the evaluation may be based upon the vapor space volume protected by the Tank Fill Limits Program (see Section 5.5.4.2.44).

5. Determine, track, and ensure that only 14 waste tanks can reach 100% of the LFL in less than seven days including:

   - Effects of post-seismic trapped gas release, assuming no ventilation
   - Number of waste tanks in Acidic Chemical Cleaning Mode. Although the primary and annulus each have less than seven days to LFL for an individual waste tank in Acidic Chemical Cleaning Mode, this is only considered “one” waste tank for the purposes of counting/tracking the number of waste tanks that can reach LFL in less than seven days.

   Document the waste tank prioritization results (Priority 1 and Priority 2 waste tanks) in the ERD (Ref. 46).

   Waste tanks (that are not considered Priority 1) that can reach 100% of the LFL in less than seven days based on the criteria above are considered Priority 2 waste tanks (for response prioritization for loss of ventilation events). The waste tank prioritization results documented in the ERD (Ref. 46) are only required to indicate the waste tanks that are considered Priority 2 waste tanks, and need not document the actual time to LFL or ranking of Priority 2 waste tanks.

   The evaluation for the effects of post-seismic trapped gas release shall be based upon the hydrogen retention/release and flammable vapor methodologies discussed in Sections 3.4.1.5.3 and 3.4.2.11.1. The evaluation shall be based upon the actual waste contents/inventory (considering incoming transfers) and shall consider the solids layers (saltcake, settled sludge, and slurried sludge) available for trapped gas release within the waste tank. For waste tanks receiving transfers from a sending vessel greater than or equal to 15,000 gallons or has continuous makeup capability, the actual waste contents/inventory shall be adjusted to account for the maximum

volume associated with a Transfer Error event (i.e., 15,000 gallons). If the liquid batch source is less than 15,000 gallons and does not have continuous makeup capability, the actual waste contents/inventory shall be adjusted to account for the maximum total volume of the batch source. The liquid source system shall be considered to have continuous makeup capability if the system has an automatic or manual fill provision that is not electrically or mechanically isolated. Liquid additions to the waste tank from the Dissolution Water Skid do not have continuous makeup capability as described in Section 3.4.1.5.2. In lieu of using the actual waste contents/inventory (including consideration of incoming transfers), the evaluation may be based upon the vapor space volume protected by the Tank Fill Limits Program (see Section 5.5.4.2.44).

The following control is not a SAC:

6. Programmatic controls shall be established to ensure a path forward is provided to DOE (addressing the additional risk and recovery time) if a transfer required to mitigate a waste tank leak causes additional waste tanks (more than 14) to have the potential to become flammable in less than seven days. Because the transfer is mitigating a degraded condition (i.e., placing the facility in a safer condition), the path forward is not required to be provided to DOE prior to initiating the transfer.

   This portion of this program is not part of the SAC and is designated as a Programmatic Controls Administrative Control. This control is not part of a first level of control or bounding condition in DBAs. This control addresses development of a corrective path forward and does not provide preventative or mitigative features for DBAs. Therefore, this part of the program does not warrant identification as a SAC.

This program was designated a SAC due to the variety of requirements, which cannot be accomplished using an engineered safety system.

Adequate conservatism exists due to the methodology used in waste tank flammability evaluations (e.g., uncertainty factors, organic contribution) and use of conservative flammable vapor methodologies (Sections 3.4.1.5.3 and 3.4.2.11.1) such that uncertainties in waste tank level and saltcake / settled sludge / slurried sludge level do not have to be accounted for in the calculations.

Equipment relied upon to implement this SAC includes waste tank level measurement devices, sludge/saltcake level measurement devices, waste tank temperature monitoring equipment, and laboratory analysis equipment. This equipment is described in more detail in Sections 2.4.1 and 5.5.4.2.7.

5.5.4.2.27.3 <u>Functional Requirements</u>

Sampling and analysis associated with this SAC, as well as the determination of tank liquid level, determination of saltcake / settled sludge / slurried sludge level, data entry, and calculation

of hydrogen generation/retention/release are routine tasks and are governed by existing procedures and training.

Saltcake, settled sludge, and slurried sludge level can be determined by measurement, visual inspection, or by engineering evaluation. Engineering shall identify the selected methodology. Soundings provide direct measurement using a tape with a wafer (for settled sludge) or a spike (for saltcake) by comparison to the known elevation of the riser being used. Turbidity meters provide direct measurement of the slurried sludge level by comparison to the known elevation of the riser being used. Visual inspections may be by direct observation or via camera by comparison to the known waste tank component elevations. Use of an engineering evaluation for saltcake / settled sludge / slurried sludge level determination shall address applicable parameters described below. Tank liquid level can be measured by reel tape, radar, etc., and tank vapor space volume is determined by the HLLCP setpoint or the actual tank liquid level (as applicable per Section 5.5.4.2.27.2). These values (saltcake, settled sludge, slurried sludge, and liquid level) are used to determine waste tank characteristics for calculation of hydrogen generation rate and amount of trapped gas retained/released.

When selected, engineering evaluations for saltcake / settled sludge / slurried sludge level determination shall address the following attributes, as applicable, for the specific waste tank:

- Process knowledge (e.g., transfer history, operational conditions)
- Historical saltcake / settled sludge / slurried sludge level determinations
- Waste tank sample results
- Uniformity of the solids level (saltcake / settled sludge / slurried sludge), as described below

It is recognized that the solids layer (saltcake / settled sludge / slurried sludge) level within a waste tank may not be at a uniform level across the tank (e.g., layer slopes downward from one side of the tank). The engineering evaluation shall consider this in determining the solids layer volume from the level determination. Although the highest measured or visually determined value may be used to define the level of the entire layer, this may produce an unreasonably conservative value for use in flammability evaluations. Known parameters of the layer (e.g., approximate slope of a settled sludge layer, mapping) may be utilized to estimate a more reasonable actual volume of the layer.

Sludge received into a waste tank during DWPF Recycle transfers, Canyon transfers, or transfers from settled sludge waste tanks with the transfer device suction at or above the sludge layer can be considered to be settled sludge immediately, provided the criteria of Section 3.4.1.5.3 are met. Additionally, supernate transfers (transfers that meet the Sludge Carryover Minimization Program) from one waste tank into another waste tank do not contain sludge for the purpose of determining slurried sludge receipts. Refer to Section 3.4.1.5.3 for additional details.

Transfers from a slurried sludge waste tank differ in that the depth of the transfer device suction in relation to the slurried sludge layer can have a significant impact on the volume of slurried

sludge actually transferred. An engineering evaluation shall be performed to estimate the actual volume of sludge solids moved by using the following attributes, as applicable:

- Engineering principles (e.g., fluid flow mechanics)
- Engineering modeling (e.g., Computational Fluid Dynamics)
- Equipment characteristics (e.g., pump curves, suction orientation)
- Process knowledge (e.g., weight percent solids from sample at a specific level)

When transfers are complete, resulting changes in the saltcake / settled sludge / slurried sludge volumes (for the sending and receiving tanks, as applicable) directly impact the overall flammability characteristics of the waste tanks. In order to mitigate operational impacts (e.g., higher waste tank flammability classification, higher waste tank prioritization), post transfer determination of resulting saltcake / settled sludge / slurried sludge levels may be performed by the methods defined above. This re-baseline of the waste tank solids layers, and the resulting volume, can then be utilized to update flammability evaluations providing a more accurate waste tank status.

Temperature limits used in the flammability calculations may use the temperatures protected by the Corrosion Control Program (see Section 5.5.4.2.13), not to exceed 100°C. The functionality of the waste tank temperature monitoring equipment, reel tape, and radar is assured by the NMMP as described in Section 5.5.4.2.9. The functionality of turbidity meters is assured by an operational check prior to use. Laboratory QA practices and sample analysis protocols, as described in Section 5.5.4.2.7, ensure the validity of associated sample results.

5.5.4.2.27.4 <u>SAC Evaluation</u>

Saltcake / settled sludge / slurried sludge level determinations are performed and the results are entered into operating procedures. Engineering review is performed in accordance with facility procedures. Data is entered into WCS in accordance with the WCS Control Program requirements. Prior to waste tank to waste tank transfers, sludge level data is evaluated against the Sludge Carryover Minimization Program separation criterion as a part of the transfer evaluation and approval procedure. Additionally, for transfers that do not meet the Sludge Carryover Minimization Program separation criterion, receipt waste tanks are evaluated for entry into the Spontaneous Liberation Protection portion of the Waste Tank Quiescent Time Program (see Section 5.5.4.2.28). Refer to Sections 5.5.4.2.19 and 5.5.4.2.21 for additional attributes related to minimizing sludge movement during waste tank to waste tank transfers.

Calculations require independent verification and are performed in accordance with established procedures. Monitoring of waste tank hydrogen concentration, as described in Sections 2.7.2.1, 5.5.2.2, 5.5.2.3, 5.5.2.10, 5.5.2.16, ensures that this SAC is performing the intended safety function.

5.5.4.2.28 WASTE TANK QUIESCENT TIME PROGRAM (SPECIFIC ADMINISTRATIVE CONTROL 5.8.2.28)

5.5.4.2.28.1 Safety Function

The Waste Tank Quiescent Time Program is applicable to waste tanks that contain slurried sludge. This program is also applicable to waste tanks that contain settled sludge, if the waste tank was placed under the Seismic Release Protection portion of the program. This program provides different safety functions dependent upon whether the waste tank has completed full sludge inventory initial trapped gas depletion via mixing operations (Seismic Release Protection) or the waste tank contains a slurried sludge layer as a direct result of sludge agitation via waste tank mixing devices or receipt of slurried sludge via a transfer (Spontaneous Liberation Protection). The Waste Tank Quiescent Time Program controls the waste tanks to ensure:

- Waste tanks under the Seismic Release Protection portion of the program will not reach 100% of the LFL (CLFL for Tank 50) (due to trapped gas release from the settled sludge / slurried sludge and subsequent radiolytic hydrogen production) in less than seven days following a seismic event.
- Waste tanks under the Spontaneous Liberation Protection portion of the program will maintain the minimum time to LFL (CLFL for Tank 50) defined by the waste tank flammability classification. This portion of the program protects spontaneous liberation events in these waste tanks.

The Waste Tank Quiescent Time Program is not applicable to waste tanks in Acidic Chemical Cleaning Mode or Closure Mode.

The Waste Tank Quiescent Time Program is credited as part of the first level of control for the following Chapter 3 events:

- Waste Tank Explosion (Section 3.4.2.11)
- Seismic Event (Section 3.4.2.18)

This SAC serves an SC/SS function for these Chapter 3 accidents.

5.5.4.2.28.2 SAC Description

The Waste Tank Quiescent Time Program shall require the following to protect assumed times to LFL (CLFL for Tank 50) (excluding waste tanks in Acidic Chemical Cleaning Mode or Closure Mode):

1. Determine and track waste tanks required to be in the Waste Tank Quiescent Time Program (Seismic Release Protection and Spontaneous Liberation Protection) and document in the ERD (Ref. 46).

   The program shall use the criteria/methodologies discussed in Sections 3.4.1.5.3 and 3.4.2.11.1 for determining applicability of waste tanks to the Waste Tank Quiescent Time Program (Seismic Release Protection and/or Spontaneous

Liberation Protection). Waste tanks are placed under the Seismic Release Protection portion of the Waste Tank Quiescent Time Program after successful initial full inventory sludge mixing (i.e., hydrogen depletion) as described in Section 3.4.2.11.1. Additionally, waste tanks will be placed under the Seismic Release Protection portion of the Waste Tank Quiescent Time Program if the waste tank initially contains no sludge (even if saltcake is present), but receives slurried sludge via a transfer. Waste tanks are placed under the Spontaneous Liberation Protection portion of the Waste Tank Quiescent Time Program when the waste tank contains a slurried sludge layer as a direct result of sludge agitation via waste tank mixing devices or receipt of slurried sludge via a transfer (including waste tanks in the Seismic Release Protection portion of the Waste Tank Quiescent Time Program). Waste tanks will remain in the Seismic Release Protection and/or Spontaneous Liberation Protection portions of the program until the program is no longer applicable due to waste tank conditions as described in Section 3.4.2.11.1.

The Waste Tank Quiescent Time Program shall perform the following to determine applicability of waste tanks to the Seismic Release Protection and/or Spontaneous Liberation Protection portion(s) of the program:

- Evaluation of Sludge Slurry Transfers to waste tanks to determine if the transfer warrants placing the waste tank (due to slurried sludge receipt) in the applicable portion(s) of the program.

- Evaluation of waste tank mixing device operation in waste tanks containing sludge to determine if the operation warrants placing the waste tank (due to sludge agitation) in the applicable portion(s) of the program.

2. Waste tanks under the Waste Tank Quiescent Time Program (Seismic Release Protection) shall be controlled to ensure that the waste tanks will not reach 100% of the LFL (CLFL for Tank 50) (due to trapped gas release from the settled sludge / slurried sludge and subsequent radiolytic hydrogen production) in less than seven days following a seismic event.

   Waste tanks are controlled to ensure that the criterion is not exceeded, by one or both of the following methods:

   - Periodically operate waste tank mixing devices in the applicable sludge layer to limit the amount of trapped gas that can be released.

   - Maintain waste tank configuration (e.g., waste level, slurried sludge level) to limit the amount of trapped gas that can be released and ensure adequate waste tank vapor space volume.

   The program shall determine the quiescent time and the evaluation shall be based upon the hydrogen retention/release and flammable vapor methodologies discussed in Sections 3.4.1.5.3 and 3.4.2.11.1. The evaluation shall be based upon the actual waste contents/inventory (considering incoming transfers). For waste tanks

receiving transfers from a sending vessel greater than or equal to 15,000 gallons or has continuous makeup capability, the actual waste contents/inventory shall be adjusted to account for the maximum volume associated with a Transfer Error event (i.e., 15,000 gallons). If the liquid batch source is less than 15,000 gallons and does not have continuous makeup capability, the actual waste contents/inventory shall be adjusted to account for the maximum total volume of the batch source. The liquid source system shall be considered to have continuous makeup capability if the system has an automatic or manual fill provision that is not electrically or mechanically isolated. Liquid additions to the waste tank from the Dissolution Water Skid do not have continuous makeup capability as described in Section 3.4.1.5.2. In lieu of using the actual waste contents/inventory (including consideration of incoming transfers), the evaluation may be based upon the vapor space volume protected by the Tank Fill Limits Program (see Section 5.5.4.2.44).

The program shall also address the requirements for declaring hydrogen depletion success for a given tank sector (e.g., waste tank mixing device run times and speeds, number of waste tank mixing devices required to perform the safety function). The program shall also address the requirements in the event that hydrogen depletion success is not attained. The criteria/methodology for these requirements is discussed in Section 3.4.2.11.1.

3. Waste tanks under the Waste Tank Quiescent Time Program (Spontaneous Liberation Protection) shall be controlled to ensure that the minimum time to LFL (CLFL for Tank 50) defined by the waste tank flammability classification is maintained.

   Waste tanks are controlled to ensure that the criterion is not exceeded, by one or both of the following methods:

   - Periodically operate waste tank mixing devices in the applicable sludge layer to limit the amount of trapped gas that can be released.

   - Maintain waste tank configuration (e.g., waste level, slurried sludge level) to limit the amount of trapped gas that can be released and ensure adequate waste tank vapor space volume.

   The program shall determine the quiescent time and the evaluation shall be based upon the hydrogen retention/release and flammable vapor methodologies discussed in Sections 3.4.1.5.3 and 3.4.2.11.1. The evaluation shall be based upon the actual waste contents/inventory (considering incoming transfers). For waste tanks receiving transfers from a sending vessel greater than or equal to 15,000 gallons or has continuous makeup capability, the actual waste contents/inventory shall be adjusted to account for the maximum volume associated with a Transfer Error event (i.e., 15,000 gallons). If the liquid batch source is less than 15,000 gallons and does not have continuous makeup capability, the actual waste contents/inventory shall be adjusted to account for the maximum total volume of the batch source. The liquid source system shall be considered to have continuous makeup capability if the

system has an automatic or manual fill provision that is not electrically or mechanically isolated. Liquid additions to the waste tank from the Dissolution Water Skid do not have continuous makeup capability as described in Section 3.4.1.5.2. In lieu of using the actual waste contents/inventory (including consideration of incoming transfers), the evaluation may be based upon the vapor space volume protected by the Tank Fill Limits Program (see Section 5.5.4.2.44).

The program shall also address the requirements for declaring hydrogen depletion success for a given tank sector (e.g., waste tank mixing device run times and speeds, number of waste tank mixing devices required to perform the safety function). The program shall also address the requirements in the event that hydrogen depletion success is not attained. The criteria/methodology for these requirements is discussed in Section 3.4.2.11.1.

This program was designated a SAC due to the variety of requirements, which cannot be accomplished using an engineered safety system.

Adequate conservatism exists due to the methodology used in waste tank flammability evaluations (e.g., uncertainty factors, organic contribution) and use of conservative flammable vapor methodologies (Sections 3.4.1.5.3 and 3.4.2.11.1) such that uncertainties in waste tank level and settled sludge / slurried sludge level do not have to be accounted for in the calculations.

Equipment relied upon to implement this SAC includes the waste tank mixing devices (and VFDs), waste tank level measurement devices, sludge level measurement devices, waste tank temperature monitoring equipment, and laboratory analysis equipment. This equipment is described in more detail in Sections 2.4.1, 2.4.4, and 5.5.4.2.7.

5.5.4.2.28.3 Functional Requirements

Sampling and analysis associated with this SAC, as well as the determination of tank liquid level, determination of settled sludge / slurried sludge level, data entry, calculation of hydrogen generation/retention/release, calculation of quiescent time, and waste tank mixing device operation are routine tasks and are governed by existing procedures and training.

Settled sludge and slurried sludge level can be determined by measurement, visual inspection, or by engineering evaluation. Engineering shall identify the selected methodology. Soundings provide direct measurement using a tape with a wafer (for settled sludge) by comparison to the known elevation of the riser being used. Turbidity meters provide direct measurement of the slurried sludge level by comparison to the known elevation of the riser being used. Visual inspections may be by direct observation or via camera by comparison to the known waste tank component elevations. Use of an engineering evaluation for settled sludge / slurried sludge level determination shall address applicable parameters described below. Tank liquid level can be measured by reel tape, radar, etc., and tank vapor space volume is determined by the actual tank level (HLLCP setpoint may also be used). These values (settled sludge, slurried sludge, and liquid level) are used to determine waste tank characteristics for calculation of hydrogen generation rate and amount of trapped gas retained/released.

When selected, engineering evaluations for settled sludge / slurried sludge level determination shall address the following attributes, as applicable, for the specific waste tank:

- Process knowledge (e.g., transfer history, operational conditions)
- Historical settled sludge / slurried sludge level determinations
- Waste tank sample results
- Uniformity of the solids level (settled sludge / slurried sludge), as described below

It is recognized that the solids layer (settled sludge / slurried sludge) level within a waste tank may not be at a uniform level across the tank (e.g., layer slopes downward from one side of the tank). The engineering evaluation shall consider this in determining the solids layer volume from the level determination. Although the highest measured or visually determined value may be used to define the level of the entire layer, this may produce an unreasonably conservative value for use in flammability evaluations. Known parameters of the layer (e.g., approximate slope of a settled sludge layer, mapping) may be utilized to estimate a more reasonable actual volume of the layer.

Sludge received into a waste tank during DWPF Recycle transfers, Canyon transfers, or transfers from settled sludge waste tanks with the transfer device suction at or above the sludge layer can be considered to be settled sludge immediately, provided the criteria of Section 3.4.1.5.3 are met. Additionally, supernate transfers (transfers that meet the Sludge Carryover Minimization Program) from one waste tank into another waste tank do not contain sludge for the purpose of determining slurried sludge receipts. Refer to Section 3.4.1.5.3 for additional details.

Transfers from a slurried sludge waste tank differ in that the depth of the transfer device suction in relation to the slurried sludge layer can have a significant impact on the volume of slurried sludge actually transferred. An engineering evaluation shall be performed to estimate the actual volume of sludge solids moved by using the following attributes, as applicable:

- Engineering principles (e.g., fluid flow mechanics)
- Engineering modeling (e.g., Computational Fluid Dynamics)
- Equipment characteristics (e.g., pump curves, suction orientation)
- Process knowledge (e.g., weight percent solids from sample at a specific level)

When transfers are complete, resulting changes in the settled sludge / slurried sludge volumes (for the sending and receiving tanks, as applicable) directly impact the overall flammability characteristics of the waste tanks. In order to mitigate operational impacts (e.g., shorter quiescent time), post transfer determination of resulting settled sludge / slurried sludge levels may be performed by the methods defined above. This re-baseline of the waste tank solids layers, and the resulting volume, can then be utilized to update flammability evaluations providing a more accurate waste tank status.

Temperature limits used in the flammability calculations may use the temperatures protected by the Corrosion Control Program (see Section 5.5.4.2.13), not to exceed 100°C. The functionality

of the waste tank temperature monitoring equipment, reel tape, and radar is assured by the NMMP as described in Section 5.5.4.2.9. The functionality of turbidity meters is assured by an operational check prior to use. Waste tank mixing device VFD software functionality is assured by the Configuration Management Program as described in Section 5.5.4.2.8. Laboratory QA practices and sample analysis protocols, as described in Section 5.5.4.2.7, ensure the validity of associated sample results.

5.5.4.2.28.4 SAC Evaluation

Settled sludge / slurried sludge level determinations are performed and the results are entered into operating procedures. Engineering review is performed in accordance with facility procedures. Data is entered into WCS in accordance with the WCS Control Program requirements. Prior to waste tank to waste tank transfers, sludge level data is evaluated against the Sludge Carryover Minimization Program separation criterion as a part of the transfer evaluation and approval procedure. Refer to Sections 5.5.4.2.19 and 5.5.4.2.21 for additional attributes related to minimizing sludge movement during waste tank to waste tank transfers.

Calculations require independent verification and are performed in accordance with established procedures. Waste tank mixing device height is controlled via the Configuration Management Program and design control.

Various methods, as described in Section 3.4.2.11.1, ensure adequate mixing of the tank. Monitoring of waste tank hydrogen concentration, as described in Sections 2.7.2.1, 5.5.2.2, 5.5.2.3, 5.5.2.10, ensures that this SAC is performing the intended safety function. Quiescent times or waste tank configuration (e.g., waste level, slurried sludge level) can be adjusted should a waste tank mixing device become non-functional (see Section 3.4.2.11.1).

5.5.4.2.29 GAS RELEASE PROGRAM (SPECIFIC ADMINISTRATIVE CONTROL 5.8.2.29)

5.5.4.2.29.1 Safety Function

The Gas Release Program ensures, during waste tank mixing device operation, bulk saltcake dissolution, saltcake interstitial liquid removal, or free supernate removal activities, that the assumptions for the waste tank bulk vapor space hydrogen concentration are protected. The Gas Release Program is not applicable to waste tanks in Acidic Chemical Cleaning Mode (see Section 3.4.2.11.1). Information in this subsection pertaining to bulk saltcake dissolution and saltcake interstitial liquid removal activities does not apply to waste tanks in Non-Acidic Chemical Cleaning Mode, as these activities are prohibited in these waste tanks.

As described in Section 3.4.2.11, some activities in waste tanks have the potential to release insignificant amounts of hydrogen and do not require an engineering evaluation. The Gas Release Program is not applicable to these activities.

The Gas Release Program is credited as part of the first level of control or bounding initial condition for the following Chapter 3 events:

- Waste Tank Explosion (Section 3.4.2.11)
- Seismic Event (Section 3.4.2.18)

This SAC serves an SC/SS function for these Chapter 3 accidents.

5.5.4.2.29.2 SAC Description

The Gas Release Program provides the following functions to protect hydrogen concentration assumptions in the waste tank bulk vapor space during waste tank mixing device operation, bulk saltcake dissolution, saltcake interstitial liquid removal, or free supernate removal activities (excluding waste tanks in Acidic Chemical Cleaning Mode):

1. Prior to initiating sludge agitation (using waste tank mixing devices), bulk saltcake dissolution, or saltcake interstitial liquid removal activities, determine if the activity will cause the waste tank to enter Gas Release Mode (i.e., exceed the Gas Release Criteria stated in Section 3.4.2.11.1).

   The evaluation shall be based upon the hydrogen retention/release and flammable vapor methodologies discussed in Sections 3.4.1.5.3 and 3.4.2.11.1, and shall consider the solids layers (saltcake, settled sludge, and slurried sludge) that are affected by the activity.

2. Prior to initiating sludge agitation (using waste tank mixing devices), bulk saltcake dissolution, or saltcake interstitial liquid removal activities, ensure the waste tank bulk vapor space hydrogen concentration is less than or equal to the initial value assumed in the hydrogen release engineering evaluation (by verifying adequate number of tank vapor space turnovers, verifying vapor space hydrogen concentration, or combination of the preceding two methodologies).

   To ensure that the waste tank bulk vapor space hydrogen concentration is less than or equal to the initial value assumed in the hydrogen release engineering evaluation, this control involves application of one of the following methodologies:

   a) an adequate number of vapor space turnovers (per methodology specified in Reference 17, with a mixing efficiency of 0.2),
   b) comparing the tank LFL reading to a reading obtained using a known LFL concentration, or
   c) a combination of the item a and b methodologies.

   The mixing efficiency of 0.2 (stated in item a) is based on the recommended value from NFPA 69 (Ref. 97) Annex D for the ventilation system arrangement (single exhaust opening, non-positive supply ventilation system). If the flammable vapor concentration method (item b) is implemented, the methodology used to determine

flammable vapor concentration shall be consistent with the requirements of Reference 44.

Once the pre-activity verification is performed, re-verification of waste tank bulk vapor space hydrogen concentration is not required unless additional activities occur which might invalidate initial concentration assumptions (e.g., ventilation system shutdown, occurrence of other significant dissolved/trapped gas releasing activity [jetted transfer receipt, waste tank mixing device operation]).

3. For waste tanks in Gas Release Mode undergoing sludge agitation (using waste tank mixing devices), bulk saltcake dissolution, or saltcake interstitial liquid removal activities, the activity shall be controlled to maintain the waste tank bulk vapor space hydrogen concentration less than or equal to the safety analysis value and maintain the minimum time to LFL defined by the waste tank flammability classification.

   The methodology used to determine the necessary controls (e.g., number of waste tank mixing devices, mixing device speed/indexing, amount/rate of liquid addition, amount/rate of saltcake interstitial liquid removal) shall be based on an engineering evaluation and shall consider the solids layers (saltcake, settled sludge, and slurried sludge) that are affected by the activity. The evaluation for determining the controls shall be based upon the actual waste contents/inventory (considering incoming transfers), minimum required ventilation flow rate for waste tanks in Gas Release Mode (72 scfm [188 scfm for Tanks 40 and 51]), and shall use the initial hydrogen concentration value assumed in the evaluation. The evaluation shall be based upon the hydrogen retention/release and flammable vapor methodologies discussed in Sections 3.4.1.5.3 and 3.4.2.11.1, except as follows:

   - Trapped hydrogen release percentage for settled sludge agitation (using waste tank mixing devices): The evaluation may be based on controlled parameters (e.g., number of waste tank mixing devices, mixing device speed/indexing) to determine the affected tank cross sectional area and sludge disturbance depth (amount of sludge disturbed) for the activity in lieu of Section 3.4.1.5.3 criteria.

   - Volume/amount of saltcake for bulk saltcake dissolution (due to liquid addition with or without Supernate Coverage): The evaluation may be based on controlled parameters (e.g., amount/rate of liquid addition) to determine the saltcake volume and affected dissolution rate (and corresponding hydrogen release rate) for the activity. This hydrogen release rate may then be applied for the activity (versus assuming an instantaneous release from the total volume of saltcake). For this exception, the saltcake dissolution ratio (one gallon of water/Dilute Supernate added dissolves one gallon of saltcake) in Section 3.4.1.5.3 is applicable, but will apply to the controlled parameter (e.g., liquid addition rate). Liquid addition via Mixing Eductors is not allowed to exceed the Gas Release Criteria stated in

Section 3.4.2.11.1. Therefore, this exception does not apply to liquid addition via Mixing Eductors.

- Volume/amount of saltcake for bulk saltcake dissolution (due to transfer pump operation associated with waste tank recirculation): The evaluation may be based on controlled parameters (e.g., transfer pump/recirculation flowrate) to determine the saltcake volume and affected dissolution rate (and corresponding hydrogen release rate) for the activity. This hydrogen release rate may then be applied for the activity (versus assuming an instantaneous release from the total volume of saltcake). For this exception, the saltcake dissolution ratio (one gallon of Dilute Supernate above the Bulk Saltcake Layer dissolves one gallon of saltcake) in Section 3.4.1.5.3 is applicable, but will apply to the controlled parameter (e.g., transfer pump/recirculation flowrate).

- Volume/amount of saltcake for saltcake interstitial liquid removal: The evaluation may be based on controlled parameters (e.g., saltcake interstitial liquid removal transfer pump flowrate) to determine the saltcake volume and affected hydrogen release rate for the activity. This hydrogen release rate may then be applied for the activity (versus assuming an instantaneous release from the total volume of saltcake).

Permitting modification of the inputs stated above (based on controlled parameters) is considered acceptable given the waste tank status (Gas Release Mode with associated requirements [e.g., exhaust low flow/high hydrogen concentration interlocks]), continued use of conservative trapped gas release inputs (e.g., trapped gas bubble gas volume, hydrogen percent in trapped gas) in the evaluation, and the conservative derivation of the original inputs (which did not consider a rate or time for the activity to occur).

For waste tanks receiving transfers, the actual waste contents/inventory shall be adjusted to account for the planned transfer amount and does not have to be adjusted for the maximum volume associated with a Transfer Error event (i.e., 15,000 gallons). Not accounting for the volume associated with a Transfer Error event for this attribute of the program is considered acceptable given the waste tank status (Gas Release Mode with associated requirements [e.g., exhaust low flow/high hydrogen concentration interlocks]) and continued use of conservative trapped gas release inputs (e.g., trapped gas bubble gas volume, hydrogen percent in trapped gas) in the evaluation. In lieu of using the actual waste contents/inventory (including consideration of incoming transfers), the evaluation may be based upon the vapor space volume protected by the Tank Fill Limits Program (see Section 5.5.4.2.44).

4. Prior to initiating free supernate removal activities (excluding Very Slow Generation Tanks), ensure the waste tank bulk vapor space hydrogen concentration is less than or equal to 2.5% of the LFL (by verifying adequate number of tank

vapor space turnovers, verifying vapor space hydrogen concentration, or combination of the preceding two methodologies).

To ensure that the waste tank bulk vapor space hydrogen concentration is less than or equal to the initial value assumed in Reference 93 for the derivation of the Free Supernate Removal Hydrogen Release Rate Limits (Item 5), this control involves application of one of the following methodologies:

a) an adequate number of vapor space turnovers (per methodology specified in Reference 17, with a mixing efficiency of 0.2),

b) comparing the tank LFL reading to a reading obtained using a known LFL concentration, or

c) a combination of the item a and b methodologies.

The mixing efficiency of 0.2 (stated in item a) is based on the recommended value from NFPA 69 (Ref. 97) Annex D for the ventilation system arrangement (single exhaust opening, non-positive supply ventilation system). If the flammable vapor concentration method (item b) is implemented, the methodology used to determine flammable vapor concentration shall be consistent with the requirements of Reference 44.

Once the pre-activity verification is performed, re-verification of waste tank bulk vapor space hydrogen concentration is not required unless additional activities occur which might invalidate initial concentration assumptions (e.g., ventilation system shutdown, occurrence of other significant dissolved/trapped gas releasing activity [jetted transfer receipt, waste tank mixing device operation]).

5. Prior to initiating free supernate removal activities, ensure that the resultant free supernate hydrogen release rate is less than or equal to the following values for the associated waste tank type and flammability classification:

Free Supernate Removal Hydrogen Release Rate Limits by Waste Tank Flammability Classification			
Tank Type	Waste Tank Flammability Classification		
	Rapid Generation Tank	Slow Generation Tank	Very Slow Generation Tank
Type I	$HR_{FSR} \leq 187$	$HR_{FSR} \leq 163$	$HR_{FSR} \leq 89$
Type II	$HR_{FSR} \leq 226$	$HR_{FSR} \leq 207$	$HR_{FSR} \leq 111$
Type III/IIIA	$HR_{FSR} \leq 223$	$HR_{FSR} \leq 212$	$HR_{FSR} \leq 113$
Type IV	$HR_{FSR} \leq 233$	$HR_{FSR} \leq 232$	$HR_{FSR} \leq 122$
(HR_{FSR} is total gallons of hydrogen released per inch of liquid removed during free supernate removal)			

The evaluation shall be based upon the hydrogen retention/release and flammable vapor methodologies discussed in Sections 3.4.1.5.3 and 3.4.2.11.1, and shall consider the combined contents of the waste tank (saltcake, settled sludge, and slurried sludge). For waste tanks undergoing sludge agitation using waste tank mixing devices concurrent with the outgoing transfer (or had undergone sludge agitation within 48 hours prior to the completion of the transfer), trapped gas release from the slurried sludge layer may be discounted from the evaluation if hydrogen depletion success had been accomplished by the criteria/methodology in Section 3.4.2.11.1. The 48-hour period (for waste tanks that had previously undergone sludge agitation) is based on engineering judgment. This time period is considered reasonably conservative since sludge slurry would need sufficient time for the sludge solids to settle (via the free settling phase) and generate/retain any appreciable radiolytic hydrogen.

The Free Supernate Removal Hydrogen Release Rate Limits stated above were derived in Reference 93 to ensure that free supernate removal activities will maintain the minimum time to LFL (CLFL for Tank 50) defined by the waste tank flammability classification (and associated minimum ventilation flow rate requirements).

6. Prior to operation of a waste tank mixing device in a waste tank containing only slurried sludge (for a mixing device that has not been operated within 180 days), ensure the waste tank level is within the following limits to ensure adequate vapor space volume for flammable transients:

Waste Tank Level Limitations for Flammable Transients				
Waste Tank Conditions (see Section 3.4.1.5.3 for discussion on Hydrogen Percent in Trapped Gas [H_{mix}])	Waste Tank Type and Maximum Level (in inches from the bottom of the tank)			
	I	II	III/IIIA	IV
$H_{mix} \leq 37.5\%$ and waste tank mixing device discharge totally clear of sludge	274	304	376	411
$H_{mix} \leq 37.5\%$ and waste tank mixing device discharge partially or fully submerged in sludge	215	245	317	397
$H_{mix} > 37.5\%$ and waste tank mixing device discharge totally clear of sludge	254	284	356	411
$H_{mix} > 37.5\%$ and waste tank mixing device discharge partially or fully submerged in sludge	136	166	238	318

The limits above apply to waste tank mixing device operation in a waste tank containing only slurried sludge (with respect to solids layers in the tank) and the specific waste tank mixing device (planned for operation) has not been operated within (less than or equal to) 180 days. Limitations on waste tank level stated above are for flammable transient analysis per Reference 95 (based on actual waste contents/inventory) and may be further restricted based on the limiting criteria of the Tank Fill Limits Program.

7. Prior to operation of a waste tank mixing device in a waste tank containing saltcake, settled sludge, or any combination of saltcake, settled sludge, or slurried sludge, ensure the waste tank level is within the following limits to ensure adequate vapor space volume for flammable transients:

Waste Tank Level Limitations for Flammable Transients				
Waste Tank Conditions (see Section 3.4.1.5.3 for discussion on Hydrogen Percent in Trapped Gas [H_{mix}])	Waste Tank Type and Maximum Level (in inches from the bottom of the tank)			
	I	II	III/IIIA	IV
$H_{mix} \leq 37.5\%$ and waste tank mixing device discharge totally clear of saltcake <u>and</u> sludge	274	304	376	411
$H_{mix} \leq 37.5\%$ and waste tank mixing device discharge partially or fully submerged in saltcake <u>or</u> sludge	215	245	317	397
$H_{mix} > 37.5\%$ and waste tank mixing device discharge totally clear of saltcake <u>and</u> sludge	254	284	356	411
$H_{mix} > 37.5\%$ and waste tank mixing device discharge partially or fully submerged in saltcake <u>or</u> sludge	136	166	238	318

The limits above apply to waste tank mixing device operation in a waste tank containing saltcake, settled sludge, or any combination of saltcake, settled sludge, or slurried sludge (with respect to solids layers in the tank). Limitations on waste tank level stated above are for flammable transient analysis per Reference 95 (based on actual waste contents/inventory) and may be further restricted based on the limiting criteria of the Tank Fill Limits Program.

The Gas Release Program is part of the first level of control or bounding initial condition for some waste tank explosion scenarios. For waste tanks in Gas Release Mode undergoing sludge agitation (using waste tank mixing devices), bulk saltcake dissolution, or saltcake interstitial

liquid removal activities, Item 3 of this SAC was chosen as part of the first level of control because it is required to supplement the hardware control chosen (i.e., ventilation system). The SC ventilation system purge flow (required by the TSRs) may not be sufficient to limit the waste tank flammable vapor concentration to below assumed values for trapped gas releases; thus, this program (for limiting the amount of trapped gas released) is part of the first level of control to address this vulnerability. The ventilation system and Gas Release Program were chosen over hydrogen monitoring since the hydrogen monitoring would only be able to address the hazard (high hydrogen concentration) after the trapped gas release had challenged the imposed LFL limit, whereas the ventilation system and Gas Release Program could ensure the LFL limit was never exceeded. This program was designated a SAC due to the variety of requirements, which cannot be accomplished using an engineered safety system.

Adequate conservatism exists due to the methodology used in waste tank flammability evaluations (e.g., uncertainty factors, organic contribution) and use of conservative flammable vapor methodologies (Sections 3.4.1.5.3 and 3.4.2.11.1) such that uncertainties in waste tank level and saltcake / settled sludge / slurried sludge level do not have to be accounted for in the calculations.

Equipment relied upon to implement this SAC includes (depending on activity) the waste tank mixing devices (and VFDs), transfer pumps (and VFDs) associated with saltcake interstitial liquid removal, transfer pumps (and VFDs) associated with waste tank recirculation, inline flowmeters (for liquid addition/removal rate or waste tank recirculation rate), saltcake dissolution liquid addition source tanks (e.g., flushwater), hydrogen concentration monitoring equipment, waste tank level measurement devices, sludge/saltcake level measurement devices, waste tank temperature monitoring equipment, laboratory analysis equipment, and flow instrumentation for vapor space turnover measurement. This equipment is described in more detail in Sections 2.4.1, 2.4.4, 2.7.2, and 5.5.4.2.7.

5.5.4.2.29.3 Functional Requirements

Sampling and analysis associated with this SAC, as well as the determination of tank liquid level, determination of saltcake / settled sludge / slurried sludge level, data entry, and calculation of hydrogen generation/retention/release are routine tasks and are governed by existing procedures and training. For Item 3 of Section 5.5.4.2.29.2, procedures are required to identify the controlled parameters (e.g., waste tank mixing device speed, liquid addition/removal rate) from the engineering evaluation and the procedures shall also require stopping the activity (sludge agitation, bulk saltcake dissolution, or saltcake interstitial liquid removal) should a controlled parameter be exceeded.

Saltcake, settled sludge, and slurried sludge level can be determined by measurement, visual inspection, or by engineering evaluation. Engineering shall identify the selected methodology. Soundings provide direct measurement using a tape with a wafer (for settled sludge) or a spike (for saltcake) by comparison to the known elevation of the riser being used. Turbidity meters provide direct measurement of the slurried sludge level by comparison to the known elevation of the riser being used. Visual inspections may be by direct observation or via camera by comparison to the known waste tank component elevations. Use of an engineering evaluation for saltcake / settled sludge / slurried sludge level determination shall address applicable

parameters described below. Tank liquid level can be measured by reel tape, radar, etc., and tank vapor space volume is determined by the HLLCP setpoint or the actual tank liquid level (as applicable per Section 5.5.4.2.29.2). These values (saltcake, settled sludge, slurried sludge, and liquid level) are used to determine waste tank characteristics for calculation of hydrogen generation rate and amount of trapped gas retained/released.

When selected, engineering evaluations for saltcake / settled sludge / slurried sludge level determination shall address the following attributes, as applicable, for the specific waste tank:

- Process knowledge (e.g., transfer history, operational conditions)
- Historical saltcake / settled sludge / slurried sludge level determinations
- Waste tank sample results
- Uniformity of the solids level (saltcake / settled sludge / slurried sludge), as described below

It is recognized that the solids layer (saltcake / settled sludge / slurried sludge) level within a waste tank may not be at a uniform level across the tank (e.g., layer slopes downward from one side of the tank). The engineering evaluation shall consider this in determining the solids layer volume from the level determination. Although the highest measured or visually determined value may be used to define the level of the entire layer, this may produce an unreasonably conservative value for use in flammability evaluations. Known parameters of the layer (e.g., approximate slope of a settled sludge layer, mapping) may be utilized to estimate a more reasonable actual volume of the layer.

Sludge received into a waste tank during DWPF Recycle transfers, Canyon transfers, or transfers from settled sludge waste tanks with the transfer device suction at or above the sludge layer can be considered to be settled sludge immediately, provided the criteria of Section 3.4.1.5.3 are met. Additionally, supernate transfers (transfers that meet the Sludge Carryover Minimization Program) from one waste tank into another waste tank do not contain sludge for the purpose of determining slurried sludge receipts. Refer to Section 3.4.1.5.3 for additional details.

Transfers from a slurried sludge waste tank differ in that the depth of the transfer device suction in relation to the slurried sludge layer can have a significant impact on the volume of slurried sludge actually transferred. An engineering evaluation shall be performed to estimate the actual volume of sludge solids moved by using the following attributes, as applicable:

- Engineering principles (e.g., fluid flow mechanics)
- Engineering modeling (e.g., Computational Fluid Dynamics)
- Equipment characteristics (e.g., pump curves, suction orientation)
- Process knowledge (e.g., weight percent solids from sample at a specific level)

When transfers are complete, resulting changes in the saltcake / settled sludge / slurried sludge volumes (for the sending and receiving tanks, as applicable) directly impact the overall flammability characteristics of the waste tanks. In order to mitigate operational impacts

(e.g., require Gas Release Mode), post transfer determination of resulting saltcake / settled sludge / slurried sludge levels may be performed by the methods defined above. This re-baseline of the waste tank solids layers, and the resulting volume, can then be utilized to update flammability evaluations providing a more accurate waste tank status.

Temperature limits used in the flammability calculations may use the temperatures protected by the Corrosion Control Program (see Section 5.5.4.2.13), not to exceed 100°C. Hydrogen concentration monitoring equipment, inline flowmeters (for liquid addition/removal rate or waste tank recirculation rate), and flow instrumentation for vapor space turnover measurement are IPI or M&TE equipment as described in Section 5.5.4.2.7. The functionality of the waste tank temperature monitoring equipment, reel tape, and radar is assured by the NMMP as described in Section 5.5.4.2.9. The functionality of turbidity meters is assured by an operational check prior to use. Waste tank mixing device and transfer pump VFD software functionality is assured by the Configuration Management Program as described in Section 5.5.4.2.8. Laboratory QA practices and sample analysis protocols, as described in Section 5.5.4.2.7, ensure the validity of associated sample results.

5.5.4.2.29.4 <u>SAC Evaluation</u>

Saltcake / settled sludge / slurried sludge level determinations are performed and the results are entered into operating procedures. Engineering review is performed in accordance with facility procedures. Data is entered into WCS in accordance with the WCS Control Program requirements. Prior to waste tank to waste tank transfers, sludge level data is evaluated against the Sludge Carryover Minimization Program separation criterion as a part of the transfer evaluation and approval procedure. Additionally, for transfers that do not meet the Sludge Carryover Minimization Program separation criterion, receipt waste tanks are evaluated for entry into the Spontaneous Liberation Protection portion of the Waste Tank Quiescent Time Program (see Section 5.5.4.2.28). Refer to Sections 5.5.4.2.19 and 5.5.4.2.21 for additional attributes related to minimizing sludge movement during waste tank to waste tank transfers.

Calculations require independent verification and are performed in accordance with established procedures. Waste tank mixing device height is controlled via the Configuration Management Program and design control. Second person verification is required for waste tank level (Items 6 and 7 of Section 5.5.4.2.29.2) and completion of vapor space turnover time and/or comparison of the hydrogen concentration reading to the hydrogen concentration acceptance value (Items 2 and 4 of Section 5.5.4.2.29.2). Second person verification is also required for the controlled parameters identified by Item 3 of Section 5.5.4.2.29.2. These may include (depending on the activity and controlled parameters) the following:

- Waste tank mixing device or transfer pump speed setting
- Waste tank mixing device turntable operation (e.g., indexed)
- Saltcake dissolution liquid addition rate or saltcake interstitial liquid removal rate (if pump capacity exceeds the allowable addition/removal rate)
- Transfer pump / waste tank recirculation flowrate (if pump capacity exceeds the allowable recirculation rate)

Monitoring of waste tank hydrogen concentration, as described in Sections 2.7.2.1, 5.5.2.2, 5.5.2.3, 5.5.2.10, ensures that this SAC is performing the intended safety function.

5.5.4.2.30 DELETED

5.5.4.2.31 HYDROGEN GENERATION RATE CONTROL (SPECIFIC ADMINISTRATIVE CONTROL 5.8.2.31)

5.5.4.2.31.1 Safety Function

The Hydrogen Generation Rate Control Program ensures that the hydrogen generation rates of waste contained in waste tanks and transfer systems will not exceed the bounding values as described in Section 3.4.1.5.5 to prevent explosions in these locations.

The Hydrogen Generation Rate Control Program is a bounding initial assumption for the following Chapter 3 events:

- Transfer Facility Explosion (Section 3.4.2.7)
- Pump Pit and Pump Tank Explosion (Section 3.4.2.8)
- Waste Tank Explosion (Section 3.4.2.11)
- Waste Tank Annulus Explosion (Section 3.4.2.12)
- Tornado and High Winds Event (Section 3.4.2.17)
- Seismic Event (Section 3.4.2.18)
- Wildland Fire (Section 3.4.2.19)
- Loss of Offsite Power (Section 3.4.2.20)

This SAC serves an SC/SS function for these Chapter 3 accidents.

5.5.4.2.31.2 SAC Description

Controls shall be established addressing protection of the hydrogen generation rates used in the safety analysis and residual calculations as discussed in Section 3.4.1.5.5 (excluding evaporators – see Section 5.5.4.2.25 and 5.5.4.2.26). These controls shall consider activities (e.g., water additions, decant operations) that may affect the hydrogen generation rates within the locations discussed in Section 3.4.1.5.5.

Due to the nature of the Hydrogen Generation Rate Control Program this function cannot be performed by a particular SSC. Therefore, it is classified as a SAC.

Equipment required to implement this SAC includes laboratory analysis equipment, as described in Section 5.5.4.2.7.

5.5.4.2.31.3 Functional Requirements

The Hydrogen Generation Rate Control Program utilizes sample analysis/process knowledge to determine hydrogen generation rates (e.g., WCS, calculation) and evaluates planned evolutions that have the potential to affect hydrogen generation results (e.g., liquid additions, transfers).

The calculation of hydrogen generation rate is a routine task and is described in more detail in Section 3.4.1.1.2.

5.5.4.2.31.4 SAC Evaluation

Calculations require independent verification and are performed in accordance with established procedures.

The hydrogen generation rate can be determined by WCS, which is Level B software classified in accordance with Procedure Manual E7 (Ref. 54). Monitoring of waste tank hydrogen concentration, as described in Sections 2.7.2.1, 5.5.2.2, 5.5.2.3, 5.5.2.10, ensure that this SAC is performing the intended safety function. Laboratory QA practices and sample analysis protocols, as described in Section 5.5.4.2.7, ensure the validity of associated sample results.

5.5.4.2.32 WASTE CHARACTERIZATION SYSTEM CONTROL PROGRAM (ADMINISTRATIVE CONTROL 5.8.2.32)

Programmatic controls shall be established for the Waste Characterization System. The purpose of the WCS is to characterize the waste tank contents within the CSTF (e.g., isotopic and chemical makeup). Waste may be characterized through sampling, process knowledge, or other means as specified by Engineering.

Calculations within WCS performed in support of the DSA are controlled as Level B software, in accordance with site procedures. Data entered and maintained within WCS is managed in accordance with site procedures for Level B software.

This program is designated as a Programmatic Controls Administrative Control. This program provides support to the WAC Program, which is used as a first level of control or bounding condition. However, this program provides a broad safety management function using an engineered software system which is governed by organizational procedures. Therefore, this program does not warrant identification as a SAC.

5.5.4.2.33 TANK TOP/SECONDARY CONTAINMENT LOADING PROGRAM (ADMINISTRATIVE CONTROL 5.8.2.33)

Programmatic controls shall be established governing loads placed on tank tops and secondary containments (e.g., PP cell, DB cell, VB cell). This program shall ensure that loads placed on safety-related structures do not compromise the ability of the structures to perform their intended safety function.

This program is designated as a Programmatic Controls Administrative Control. Although this program is part of a first or second level of control in DBAs, the program provides a support

function to aid in maintaining structure integrity. This program provides a broad safety management function which is contained in organizational procedures and does not involve time critical operator actions. Therefore, this program does not warrant identification as a SAC.

5.5.4.2.34 DELETED

5.5.4.2.35 WASTE TANK MIXING DEVICE OPERATION (SPECIFIC ADMINISTRATIVE CONTROL 5.8.2.35)

5.5.4.2.35.1 Safety Function

The safety function of the Waste Tank Mixing Device Operation SAC is to control the operation of waste tank mixing devices such that aerosolization of waste and SMP Waste Release events do not result in a significant release.

This SAC involves several different controls on operation of mixing devices and serves as a first level of control or bounding initial condition for the following events:

- Transfer Error/SMP Waste Release (Section 3.4.2.9)
- Aerosolization Events (Section 3.4.2.10)
- Seismic Event (Section 3.4.2.18)

This SAC serves an SS function for these Chapter 3 accidents.

5.5.4.2.35.2 SAC Description

Waste tank mixing device operation in Type I, II, III, IIIA, and IV Waste Tanks shall be controlled such that the waste tank mixing device discharge is sufficiently below the waste surface to prevent a waste aerosolization accident during these activities. As a minimum, this program shall account for the maximum allowable speed of the waste tank mixing device versus waste tank mixing device submergence to ensure sufficient inventory remains above the waste tank mixing device discharge (i.e., revolutions per minute [rpm] versus level).

The SMP shall be operated at or below the maximum allowable pump speed of 500 rpm while an external water source is connected to the SMP. This speed shall be verified by manually reducing the speed at the variable VFD until the speed is at or below 500 rpm. This shall be independently verified prior to connecting an external water source to the pump. An operator shall be stationed at the VFD to ensure that the VFD speed is not modified at any time while the SMP is operating and the external water source is connected. A lockable physical barrier may be installed which prevents VFD speed changes, in lieu of stationing an operator.

It is recognized that waste tank mixing device operation will result in some limited "aerosolization" occurring, but the goal of this program is to prevent an aerosolization accident (i.e., an event that results in a significant amount of waste spray being discharged into the waste tank vapor space and then being released from primary containment). Examples of activities that would result in an acceptable amount of "aerosolization" include: a) lowering the waste tank

level using camera monitoring to detect excessive spray discharge, b) waste splashing during waste tank mixing device startup, and c) discharge from the coolant nozzles on the SMPs.

Because this program relies upon several different types of administrative controls and cannot be performed by an SSC, it is designated a SAC.

Equipment utilized to implement this SAC includes waste tank mixing devices and VFDs (Section 2.4.4.5), camera equipment (Section 2.4.4.5), and waste tank level detection equipment (Section 2.4.1.3).

5.5.4.2.35.3 Functional Requirements

The pump parameters (level, speed, etc.) and waste level are defined such that operation of the pump will not result in rooster tailing or developing sufficient SMP discharge head to force waste above ground. These operating bands are based on actual waste tank mixing device operation data with added margin. Operators are trained on identification of rooster tailing via camera inspection and operation of the VFD to control pump speed. Operation of waste tank mixing devices is considered a routine task and is governed by existing training and procedures.

The functionality of the waste tank reel tape and radar is assured by the NMMP as described in Section 5.5.4.2.9. Pump VFD software functionality is assured by the Configuration Management Program as described in Section 5.5.4.2.8.

5.5.4.2.35.4 SAC Evaluation

Appropriate means of verifying that an aerosolization accident does not occur consist of either reel tape measurement, radar gauge, mixing device speed, or in-tank camera inspection. Independent verification of SMP speed at the VFD ensures that the safety function is being performed. When mixing device submergence is less than that required for full speed operation, second person verification of the maximum allowable speed of the waste tank mixing device versus waste tank mixing device submergence ensures the safety function is being performed. Waste tank mixing device height is controlled via the Configuration Management Program and design control.

5.5.4.2.36 PUMP TANK TRANSFER JET CONTROL PROGRAM (SPECIFIC ADMINISTRATIVE CONTROL 5.8.2.36)

5.5.4.2.36.1 Safety Function

The Pump Tank Transfer Jet Control Program prevents aerosolization and overheating of waste in a pump tank by isolating the transfer jet when not in use.

The Pump Tank Transfer Jet Control Program is credited as part of the first level of control for the following Chapter 3 events:

- Pump Tank Aerosolization due to Transfer Jet Failure event (Section 3.4.2.10)
- Waste Tank/Pump Tank Overheating events (Section 3.4.2.13)

This SAC serves an SC/SS function for these Chapter 3 accidents.

5.5.4.2.36.2 SAC Description

Controls shall be established to ensure that steam/air is manually isolated from pump tank transfer jets when not transferring.

Since transfer jet isolation valve operation is performed locally, the valves are only open for a relatively short period of time, and the control cannot be performed by an existing engineered safety system, this program was designated a SAC.

5.5.4.2.36.3 Functional Requirements

This SAC requires a manual isolation valve to be closed.

5.5.4.2.36.4 SAC Evaluation

Independent verification is required for isolation of the steam/air to the pump tank transfer jets, and ensures that the safety function of this SAC is met.

5.5.4.2.37 PUMP TANK BACKUP VENTILATION SYSTEMS PROGRAM (SPECIFIC ADMINISTRATIVE CONTROL 5.8.2.37)

5.5.4.2.37.1 Safety Function

The safety function of the Pump Tank Backup Ventilation System is to ensure that a backup ventilation system is available to provide the required ventilation flow in the required time in the event that the primary ventilation system becomes inoperable during the receipt of a transfer with the potential for a release due to dissolved hydrogen.

The Pump Tank Backup Ventilation System SAC is credited as part of the first level of control for the Pump Pit and Pump Tank Explosion event (Section 3.4.2.8) and is also credited as a control in the Seismic Event (Section 3.4.2.18). This SAC serves an SS function for these Chapter 3 accidents.

5.5.4.2.37.2 SAC Description

Prior to transfer initiation, backup portable ventilation with portable generator shall be installed and functional for pump tanks which are receiving steam jetted transfers from a source with an inventory greater than 1,200 gallons (excluding HDB-8 Complex pump tanks and pump tank receiving canyon transfers). Normal power may be utilized with the portable ventilation system; however, the portable generator shall be installed and functional. The portable ventilation system shall be tested and maintained to ensure they can perform their safety function when required. If the backup portable ventilation system becomes non-functional while the pump tank is receiving a transfer, then the transfer shall be terminated immediately.

This program was designated a SAC because the upgrades required to eliminate the vulnerabilities in the existing single-train systems were deemed cost-prohibitive, especially in

light of the infrequent nature of this operation. Conservatisms that support the SAC safety function include: it is a backup to the primary system, operation of the system is already directed by LCO 3.7.5, the ventilation is designed to maintain LFL less than 25%, and passive vents are not taken into account in LFL calculations. In addition, LFL calculations utilize both hydrogen release mechanisms (bounding radiolysis and dissolved hydrogen generation rates), although the dissolved hydrogen contribution becomes zero upon transfer termination.

Equipment required to implement this SAC includes the portable ventilation systems and power supply, and existing inline flow instrumentation.

5.5.4.2.37.3 Functional Requirements

To ensure that pump tank ventilation can be provided when required, backup portable ventilation with portable generator must be installed and verified to be functional for pump tanks (excluding HDB-8 Complex pump tanks and pump tank receiving canyon transfers) which are receiving steam jetted transfers from a source with an inventory greater than 1,200 gallons. Normal power may be utilized with the portable ventilation system; however, the portable generator shall be installed and functional. Pump tank ventilation flow must be restored in accordance with Section 5.5.1.5.

5.5.4.2.37.4 SAC Evaluation

To ensure appropriate human/machine interactions can be performed within the specified timeframes, applicability of the existing Human Reliability Assessment (HRA) is verified, or a new HRA is performed per Chapter 13, prior to initiating the transfer. The portable ventilation equipment is functionally tested and adequate fuel supply is verified prior to initiating the transfer.

5.5.4.2.38 DELETED

5.5.4.2.39 EVENT RESPONSE PROGRAM (SPECIFIC ADMINISTRATIVE CONTROL 5.8.2.39)

5.5.4.2.39.1 Safety Function

The safety function of the Event Response Program is to minimize the potential release and limit personnel exposure.

The following Chapter 3 accidents credit the Event Response Program as a first level of control, second level of control, or bounding initial condition:

- Evaporator Pot Explosion (Section 3.4.2.1)
- Evaporator Cell Explosion (Section 3.4.2.2)
- Evaporator Overflow, Leaks, and Spills (Section 3.4.2.3)
- Evaporator Overpressure (Section 3.4.2.4)
- Transfer Line and Transfer Line/Jacket Encasement Explosions (Section 3.4.2.6)

- Transfer Facility Explosions (Section 3.4.2.7)
- Pump Pit and Pump Tank Explosion (Section 3.4.2.8)
- Transfer Error/SMP Waste Release (Section 3.4.2.9)
- Aerosolization Events (Section 3.4.2.10)
- Waste Tank Explosion (Section 3.4.2.11)
- Waste Tank Annulus Explosion (Section 3.4.2.12)
- Waste Tank/Pump Tank Overheating (Section 3.4.2.13)
- Waste Tank Wall Failure (Section 3.4.2.14)
- Waste Tank Siphon/Pump-Out (Section 3.4.2.15)
- Tornado and High Winds Event (Section 3.4.2.17)
- Seismic Event (Section 3.4.2.18)
- Wildland Fire (Section 3.4.2.19)
- Loss of Offsite Power (Section 3.4.2.20)

This SAC serves an SC/SS function for these Chapter 3 accidents.

5.5.4.2.39.2 <u>SAC Description</u>

The actions/attributes credited in the analysis for various scenarios are provided below.

a. Event Response Procedures shall be in place governing required actions following a Waste Tank Siphon/Pump-Out event via the CRW System (Section 3.4.2.15). These procedures shall require the following operator actions:

   - Close the Waste Tank CRW header isolation valves upon identification of a CRW System boundary break in the waste tank (Waste Tanks 13, 14 [when connected to the CRW System], 15 [when connected to the CRW System], 25, 26, 27, 28, 36, 37, 38, 39, 40, 41, 42, 43, 44, 45, 46, 47, 48, 49, 50, and 51)
   - Close the Waste Tank 30 CRW Coil isolation valves upon identification of a CRW System boundary break in the waste tank

b. Event Response Procedures shall be in place governing required actions following a Seismic event (Sections 3.4.2.11 and 3.4.2.18). These procedures shall require the following operator actions:

   - Secure liquid transfers (excluding evaporator GDL flushes and in-progress pot siphons/lifts/pump-outs)
   - Shut down evaporators (secure steam/air to tube bundles and lances) and secure evaporator feed pumps
   - Secure pump tank agitators, waste tank mixing devices, and power to SMPs

- Secure transfer pumps associated with waste tank recirculation
- Restore primary purge ventilation or install/operate portable ventilation systems on waste tanks, prioritized on a time-to-LFL (CLFL for Tank 50) basis (portable ventilation units are maintained functional per LCO 3.8.13)
- Perform manual hydrogen monitoring of the waste tanks (excluding Tank 50) under the Waste Tank Quiescent Time Program (Seismic Release Protection) (Section 5.5.4.2.28) upon loss of waste tank ventilation
- Close the Waste Tank CRW header isolation valves upon identification of a CRW System boundary break in the waste tank (Waste Tanks 13, 14 [when connected to the CRW System], 15 [when connected to the CRW System], 25, 26, 27, 28, 29, 31, 32, 33, 34, 35, 36, 37, 38, 39, 40, 41, 42, 43, 44, 45, 46, 47, 48, 49, 50, and 51)
- Close the Waste Tank 30 CRW Coils isolation valves upon identification of a CRW System boundary break in the waste tank
- Ensure HDB-8 PVV System exhaust fan inlet damper position alignment to prevent bypass flow conditions associated with an open inlet damper on the idle exhaust fan in response to a loss of air or power
- Restore ventilation or operate backup ventilation on pump tanks receiving steam jetted transfers from a source with an inventory greater than 1,200 gallons (excluding HDB-8 Complex pump tanks and pump tanks receiving canyon transfers)
- Restore annulus ventilation or install/operate portable ventilation systems on waste tank annuli on waste tanks in Acidic Chemical Cleaning Mode, prioritized on a time-to-LFL basis (portable ventilation units are maintained functional per LCO 3.8.13)

c. Event Response Procedures shall be in place governing required actions following a Loss of Offsite Power event (Section 3.4.2.20). These procedures shall require the following operator actions:

- Secure liquid transfers (excluding evaporator GDL flushes and in-progress pot siphons/lifts/pump-outs)
- Secure pump tank agitators and waste tank mixing devices
- Secure transfer pumps associated with waste tank recirculation
- Ensure HDB-8 PVV System exhaust fan inlet damper position alignment to prevent bypass flow conditions associated with an open inlet damper on the idle exhaust fan in response to a loss of air or power
- Restore primary purge ventilation or install/operate portable ventilation systems on waste tanks in Acidic Chemical Cleaning Mode, prioritized on a time-to-LFL basis (portable ventilation units are maintained functional per LCO 3.8.13)
- Restore annulus ventilation or install/operate portable ventilation systems on waste tank annuli on waste tanks in Acidic Chemical Cleaning Mode, prioritized on a time-to-LFL basis (portable ventilation units are maintained functional per LCO 3.8.13)

d. Event Response Procedures shall be in place governing required actions following a Wildland Fire event (Section 3.4.2.19). These procedures shall require the following operator actions:

- Secure liquid transfers (excluding evaporator GDL flushes and in-progress pot siphons/lifts/pump-outs)
- Shut down evaporators (secure steam to tube bundles and lances) and secure evaporator feed pumps
- Secure pump tank agitators and waste tank mixing devices
- Secure transfer pumps associated with waste tank recirculation
- Restore primary purge ventilation or install/operate portable ventilation systems on waste tanks in Acidic Chemical Cleaning Mode, prioritized on a time-to-LFL basis (portable ventilation units are maintained functional per LCO 3.8.13)
- Restore annulus ventilation or install/operate portable ventilation systems on waste tank annuli on waste tanks in Acidic Chemical Cleaning Mode, prioritized on a time-to-LFL basis (portable ventilation units are maintained functional per LCO 3.8.13)
- If conditions do not permit restoration of primary purge ventilation or annulus ventilation (or installation/operation of portable ventilation) on waste tanks in Acidic Chemical Cleaning Mode, neutralize the waste tank contents to the maximum extent practical (e.g., add inhibitor)

e. Event Response Procedures shall be in place addressing the required actions in the event of control room abandonment. The following operator actions, as a minimum, shall be required in the event a control room needs to be evacuated (actions apply to activities associated with the evacuated control room):

- Secure liquid transfers
- Shut down evaporators (secure steam to tube bundles and lances) and secure evaporator feed pumps
- Secure pump tank agitators, waste tank mixing devices, and power to SMPs
- Secure transfer pumps associated with waste tank recirculation

Facility control rooms monitor and control some facility processes which allow operators to detect and respond to abnormal and/or accident conditions. Some accident scenarios utilize control room equipment (e.g., indicators/alarms, actuation devices) to protect assumed initial conditions and prevent/mitigate an event. The above actions were evaluated against the credited safety functions associated with control room equipment and were judged to adequately compensate for a loss of the control room equipment in the event of control room abandonment. The response actions will be performed immediately following control room abandonment and can be taken without utilizing control room instrumentation and equipment (credited and non-credited), to place the facility in a safe condition.

f. Event Response Procedures shall be in place governing required actions following a Tornado and High Winds event (Section 3.4.2.17). These procedures shall require the following operator actions on waste tanks in Acidic Chemical Cleaning Mode:

- Restore primary purge ventilation or install/operate portable ventilation systems on waste tanks, prioritized on a time-to-LFL basis (portable ventilation units are maintained functional per LCO 3.8.13)
- Restore annulus ventilation or install/operate portable ventilation systems on waste tank annuli, prioritized on a time-to-LFL basis (portable ventilation units are maintained functional per LCO 3.8.13)

This program was designated a SAC because the upgrades required to qualify/upgrade associated equipment were deemed cost-prohibitive.

5.5.4.2.39.3 Functional Requirements

The following equipment, according to plant conditions, is required to perform the safety function of this SAC:

- CRW isolation valves
- CRW Surge Tank level instrumentation
- Waste tank level instrumentation (reel tapes, radar, etc.)
- Radiation detection instrumentation (ARMs, Continuous Air Monitors [CAMs], etc.)
- Portable ventilation equipment (covered by LCO 3.8.13)
- Hydrogen monitoring equipment
- Saltcake dissolution equipment controls/disconnects
- Equipment to stop transfers
- HDB-8 ventilation/backup DG (covered by LCOs 3.7.6 and 3.9.1)
- Transfer pump controls/disconnects
- Waste tank mixing device and pump tank agitator controls/disconnects

5.5.4.2.39.4 SAC Evaluation

The following features ensure that the safety function of this SAC is met:

- Independent means to verify transfer cessation
- Independent means to verify that a siphon stops
- Minimum shift crew requirements (Section 5.5.5)
- Human-machine interface evaluation as discussed in Chapter 13
- NMMP for equipment (valves, valve operators, dampers, etc.)

- Emergency Preparedness and Operations drills

The following features provide redundancy, independence, or diversity for certain safety function aspects of this SAC:

- Procedures for High-Rem Waste Transfers identify two physically separated transfer isolation devices
- Waste Tanks in Gas Release Mode have interlocks to stop the associated activity

The following assures functionality of equipment used for this SAC (excludes equipment covered by Chapter 4 or Chapter 5):

- Waste tank reel tapes and radar - NMMP (Section 5.5.4.2.9)
- Radiation detection instrumentation (ARMs, CAMs, etc.) - Radiation Monitoring Equipment - QA Program (Section 5.5.4.2.11)
- Portable LFL monitors - M&TE Program (Section 5.5.4.2.7)
- CRW Surge Tank level instrumentation - IPI or M&TE Program (Section 5.5.4.2.7)
- Waste tank mixing device and pump tank agitator disconnects - NMMP (Section 5.5.4.2.9)

5.5.4.2.40 DELETED

5.5.4.2.41 ARM LOCATION PROGRAM (ADMINISTRATIVE CONTROL 5.8.2.41)

The safety analysis credits ARMs for the following operations:

- High–Rem Waste Transfers for above-ground waste transfer lines, including excavated transfer lines
- SMP operations

The detection capability of the ARM devices is sensitive to the radionuclide distribution. Therefore, an engineering evaluation shall be performed prior to the above listed, operations to determine the proper placement of the ARMs to ensure they can perform their intended safety function. The engineering evaluation shall consider appropriate parameters (e.g., area topography, shielding obstructions between leak locations and monitoring locations) when determining ARM placement. The program shall also determine the alarm requirements (e.g., control room alarm or local alarm and operator/control room two-way communication) for each ARM. The ARMs shall comply with LCO 3.7.9 during High–Rem Waste Transfers for above-ground waste transfer lines or LCO 3.8.11 during SMP operation.

This program is designated as a Programmatic Controls Administrative Control. This program provides support for the LCOs involved with ARMs; however, the ARMs are a second level of control for DBAs and the first level of control (e.g., core pipe integrity) is very robust. Additionally, LCOs 3.7.9 and 3.8.11 cover ARM operability and this program does not involve time critical operator actions. Therefore, this program does not warrant identification as a SAC.

5.5.4.2.42 299-H INVENTORY CONTROL PROGRAM (SPECIFIC ADMINISTRATIVE CONTROL 5.8.2.42)

5.5.4.2.42.1 Safety Function

The safety function of the 299-H Inventory Control Program is to ensure that the radiological inventory in the 299-H Facility is limited to within Hazard Category 3 inventory limits.

This SAC protects a bounding initial assumption for the 299-H Event (Section 3.4.2.16) and the Wildland Fire Event (Section 3.4.2.19). This SAC serves an SC function for these Chapter 3 accidents.

5.5.4.2.42.2 SAC Description

Controls shall be established to ensure the radiological inventory in the 299-H Facility is such that it remains classified as a Hazard Category 3 facility.

This program was designated a SAC due to the variety of requirements, which cannot be accomplished using an engineered safety system.

5.5.4.2.42.3 Functional Requirements

Prior to being sent to the 299-H Facility, contaminated equipment is drained, flushed, or rinsed. The majority of remaining contamination that is removed during maintenance or decontamination is collected in the Waste Collection Tank (WCT). The contents of the WCT are periodically transferred to HTF.

5.5.4.2.42.4 SAC Evaluation

Standard procedures and operating practices for control of radioactive material are sufficient to ensure this SAC is met.

5.5.4.2.43 PROHIBITED OPERATIONS (SPECIFIC ADMINISTRATIVE CONTROL 5.8.2.43)

5.5.4.2.43.1 Safety Function

This SAC is credited as a bounding initial condition in the following Chapter 3 sections:

- Facility Configuration and Design Inputs (Section 3.4.1.5.2)
- Evaporator Pot Explosion (Section 3.4.2.1)
- Evaporator Cell Explosion (Section 3.4.2.2)
- Evaporator Overflow, Leaks, and Spills (Section 3.4.2.3)
- Evaporator Overpressure (Section 3.4.2.4)
- Transfer Facility Fire (Section 3.4.2.5)

- Transfer Line and Transfer Line/Jacket Encasement Explosions (Section 3.4.2.6)
- Transfer Facility Explosions (Section 3.4.2.7)
- Pump Pit and Pump Tank Explosion (Section 3.4.2.8)
- Transfer Error/SMP Waste Release (Section 3.4.2.9)
- Aerosolization Events (Section 3.4.2.10)
- Waste Tank Explosion (Section 3.4.2.11)
- Waste Tank Annulus Explosion (Section 3.4.2.12)
- Waste Tank/Pump Tank Overheating (Section 3.4.2.13)
- Waste Tank Wall Failure (Section 3.4.2.14)
- Waste Tank Siphon/Pump-Out (Section 3.4.2.15)
- 299-Events (Section 3.4.2.16)
- Tornado and High Winds Event (Section 3.4.2.17)
- Seismic Event (Section 3.4.2.18)
- Wildland Fire (Section 3.4.2.19)
- Loss of Offsite Power (Section 3.4.2.20)

This SAC serves an SC/SS function for these Chapter 3 accidents.

5.5.4.2.43.2 <u>SAC Description</u>

This program was designated a SAC because there are a variety of different controls performing safety functions that cannot be accomplished with SSCs.

The following is a list of CSTF prohibited operations (see Chapter 18 for additional prohibitions associated with Tank 48).

- Addition of waste into or Waste Transfers through (non-waste transfers out are permitted) the following inactive locations are prohibited. Waste Transfers through transfer lines for which these inactive locations are receipt vessels or Leak Detection Locations are also prohibited:
  - FDB-1
  - FDB-5
  - FDB-6
  - HDB-1
  - HDB-3
  - HPP-1
  - VB-15/16

- F-Area Catch Tank
- 242-F Evaporator
- 242-16F Evaporator
- 242-H Evaporator
- F-Area Concentrate Transfer System
- H-Area Concentrate Transfer System

Inactive locations have not been analyzed for related accidents and associated controls.

- Sludge Slurry Transfers into Tank 49 are prohibited.

  Tank 49 has not been analyzed for related accidents and associated controls for Sludge Slurry Transfers. Tank 49 also serves as the dedicated receipt tank from Tank 48 in the event of a Tank 48 leak (see Chapter 18).

- High-Rem Waste Transfers to F-Area Tank Farm are prohibited (the High Point Flush Pit may be on the Transfer Path of H-Area Tank Farm High-Rem Waste Transfers).

  Locations within F-Area Tank Farm have not been analyzed for related accidents and associated controls for High-Rem Waste Transfers.

- High-Rem Waste Transfers through transfer lines for which COPs are credited Leak Detection Locations are prohibited.

  COPs have not been analyzed for related accidents and associated controls for High-Rem Waste Transfers.

- High-Rem Waste Transfers through the 241-96H VB are prohibited. The 241-96H VB is prohibited from being a Leak Detection Location for High-Rem Waste Transfers.

  The 241-96H VB has not been analyzed for related accidents and associated controls for High-Rem Waste Transfers.

- High-Rem Waste Transfers through HDB-2 are prohibited. HDB-2 is prohibited from being a Leak Detection Location for High-Rem Waste Transfers.

  Control set used for High-Rem Waste Transfers (i.e., forced ventilation) is inadequate for HDB-2. Therefore, HDB-2 has not been analyzed for related accidents and associated controls for High-Rem Waste Transfers (see Section 4.4.9).

- High-Rem Waste Transfers using a diaphragm pump are prohibited.

  Diaphragm pump operations have not been analyzed for related accidents and associated controls for High-Rem Waste Transfers.

- Waste Transfers through 242-16H Evaporator Cell transfer jumpers with an inhalation dose potential of greater than 9.8E+07 rem/gal are prohibited.

  Waste Transfers through the 242-16H Evaporator Cell have not been analyzed for related accidents and associated controls for inhalation dose potentials greater than 9.8E+07 rem/gal.

- Simultaneous Sludge Slurry Transfers through two or more core pipes contained within the same core pipe jacket/encasement are prohibited.

  Core pipes contained within the same core pipe jacket/encasement have not been analyzed for related accidents and associated controls for simultaneous Sludge Slurry Transfers through two or more core pipes.

- Steam jet transfers of waste with a radiolytic hydrogen generation rate greater than 9.6E-06 ft^3/gal-hr of waste through transfer lines for which DBs or PPs are credited Leak Detection Locations are prohibited.

  Transfer lines for which DBs or PPs are credited Leak Detection Locations have not been analyzed for related accidents and associated controls for steam jetted transfers of waste with a radiolytic hydrogen generation rate greater than 9.6E-06 ft^3/gal-hr.

- Steam jet transfers of waste with a radiolytic hydrogen generation rate greater than 9.6E-06 ft^3/gal-hr of waste through 242-16H Evaporator Cell transfer jumpers are prohibited.

  242-16H Evaporator Cell has not been analyzed for related accidents and associated controls for steam jetted transfers of waste with a radiolytic hydrogen generation rate greater than 9.6E-06 ft^3/gal-hr of waste through an evaporator cell transfer jumper.

- The only waste tanks permitted to be classified as an ESP Sludge Slurry Waste Tank are Waste Tanks 40 and 51; other waste tanks are prohibited from becoming classified as an ESP Sludge Slurry Waste Tank.

  Waste tanks other than Tanks 40 and 51 have not been analyzed for related accidents and associated controls as an ESP Sludge Slurry Waste Tank.

- Steam jetted transfers into ESP Sludge Slurry Waste Tanks are prohibited.

  ESP Sludge Slurry Waste Tanks have not been analyzed for related accidents and associated controls for steam jetted transfers (dissolved hydrogen release).

- Steam jetted transfers into Tank 50 are prohibited.

  Tank 50 has not been analyzed for related accidents and associated controls for steam jetted transfers (dissolved hydrogen release).

- SMP operation in Type IV Waste Tanks and Waste Tank 50 is prohibited.

  Type IV Waste Tanks and Tank 50 have not been analyzed for related accidents and associated controls for SMP operation.

- Operation of waste tank mixing devices in Waste Tank 39 is prohibited.

  Protects sludge quantity (from Tank 39) assumed to be released for the mitigated Waste Tank Siphon/Pump-Out event (see Section 3.4.2.15).

- Sludge Slurry Transfers out of Waste Tanks 32 and 35 are prohibited.

  Protects sludge quantity (from Tanks 32 and 35) assumed to be released for the mitigated Waste Tank Siphon/Pump-Out event (see Section 3.4.2.15).

- Creation of a dry sludge tank (other than waste tanks in Closure Mode) is prohibited. Peaks or mounds of sludge/salt that are above the liquid surface and sludge/salt that are exposed during waste removal operations are acceptable and shall not result in a waste tank being considered a "dry sludge tank."

  Waste tanks other than those in Closure Mode have not been analyzed for related accidents and associated controls as a dry sludge tank.

- Transfers through the Tank 50 VB and through receipt transfer lines into Tank 50 with an inhalation dose potential greater than 2.09E+05 rem/gal are prohibited.

  The Tank 50 VB and receipt transfer lines into Tank 50 have not been analyzed for related accidents and associated controls for inhalation dose potentials greater than 2.09E+05 rem/gal.

- Sludge agitation, bulk saltcake dissolution, and saltcake interstitial liquid removal activities in Tank 50 that could exceed the Tank 50 Gas Release Criteria (as described in Section 3.4.2.11) are prohibited.

  Tank 50 has not been analyzed for related accidents and associated controls for these activities that could exceed the Tank 50 Gas Release Criteria.

- Waste Tank Chemical Cleaning operations in Tank 1 are prohibited.

  Tank 1 has not been analyzed for related accidents and associated controls for Chemical Cleaning operations (see Section 3.4.2.14).

- Operation of Flygt Mixers is prohibited.

  Flygt Mixer operation has not been analyzed for related accidents and associated controls.

- Fuel powered equipment/vehicles (other than diesel powered) within Building 299-H are prohibited.

  Fuel leaks (other than diesel fuel) into the Building 299-H WCT have not been analyzed for related accidents and associated controls (see Section 3.4.2.16).

- During chemical cleaning operations of the 242-16H Evaporator (i.e., upon introducing acid to the evaporator vessel and through completion of water rinse with measured level in the evaporator vessel less than or equal to 73 inches), transfers through 242-16H Evaporator Cell transfer jumpers are prohibited.

  Transfers through 242-16H Evaporator Cell have not been analyzed for related accidents and associated controls during chemical cleaning operations of the 242-16H Evaporator (see Section 3.4.2.1).

- Operation of the following pumps, which require bearing water for operation, is prohibited in a waste tank containing saltcake:

  - Slurry pump

- Telescoping transfer pump when operated for the purpose of waste tank recirculation

Bulk saltcake dissolution operations (including saltcake dissolution ratio inputs) associated with bearing water introduction concurrent with slurry pump operation or telescoping transfer pump operation (during waste tank recirculation only) have not been analyzed for related accidents and associated controls.

5.5.4.2.43.3 Functional Requirements

Equipment relied upon to implement this SAC includes transfer lines, blanks, valves, and waste tank level measurement devices. This equipment is described in more detail in Sections 4.3.1, 2.4.2, 4.3.3, and 2.4.4, respectively. Isolation of transfer lines that are designated "Out-of-Service" to implement a control within this SAC shall meet the requirements of Section 5.4.2.

This SAC relies on the Transfer Control Program (Section 5.5.4.2.21), Hydrogen Generation Rate Control Program (Section 5.5.4.2.31), WCS Control Program (Section 5.5.4.2.32), Inhalation Dose Potential Program (Section 5.5.4.2.48), and the USQ process to implement controls and prohibitions detailed above.

Operations such as valve manipulation, control of the Transfer Path, and monitoring of tank level/leak detection instrumentation are considered to be routine tasks and are governed by existing procedures and training.

5.5.4.2.43.4 SAC Evaluation

The Transfer Control Program (Section 5.5.4.2.21), including independent verification of the Transfer Path, verification that mixing devices have stopped, and the USQ process ensure that the safety function of this SAC is met.

5.5.4.2.44 TANK FILL LIMITS PROGRAM (SPECIFIC ADMINISTRATIVE CONTROL 5.8.2.44)

5.5.4.2.44.1 Safety Function

This SAC does not apply to waste tanks in Acidic Chemical Cleaning Mode. Controls contained in Section 5.5.2.17 (LCO 3.8.17) protect the most conservative tank fill limit condition (flammability control requirements) and state the required limit. Thus, documenting this fill limit in the ERD is not required for these waste tanks.

Waste tank fill limits shall be controlled based on the liquid level associated with the most limiting concern for each tank. Waste tank HLLCPs provide a control room alarm in response to a waste tank high level to protect assumed initial tank conditions.

The Tank Fill Limits Program SAC is a credited first level of control or bounding initial condition in the following Chapter 3 accidents:

- Transfer Error/SMP Waste Release (Section 3.4.2.9)
- Aerosolization Events (Section 3.4.2.10)
- Waste Tank Explosion (Section 3.4.2.11)
- Waste Tank Annulus Explosion (Section 3.4.2.12)
- Waste Tank/Pump Tank Overheating (Section 3.4.2.13)
- Waste Tank Wall Failure (Section 3.4.2.14)
- Waste Tank Siphon/Pump-Out (Section 3.4.2.15)
- Tornado and High Winds Event (Section 3.4.2.17)
- Seismic Event (Section 3.4.2.18)
- Wildland Fire (Section 3.4.2.19)
- Loss of Offsite Power (Section 3.4.2.20)

This SAC serves an SC/SS function for these Chapter 3 accidents.

5.5.4.2.44.2 SAC Description

CST Engineering shall determine the fill limit for each waste tank and document the values in the ERD (Ref. 46). The fill limit shall be based on the most conservative of the following:

- Overflow Limits (these limits also protect assumptions associated with tank wall exposed area, which are based on the fill limits stated in Table 3.4-2)
- Flammability Level (used for time to LFL [CLFL for Tank 50] calculations)
- Siphon Limits for Waste Tanks 1, 2, 3, 4, 7, 8, 9, 10, and 11
- Structural Integrity Fill Limit
- Flammable Transient Limits Due to Trapped Gas Release
- Maximum Annulus Equilibrium Liquid Level (following a tank wall breach) for waste tanks in Non-Acidic Chemical Cleaning Mode

Based on the most restrictive limitation described above, the waste tank fill limit value stated in the ERD (Ref. 46) shall account for the maximum volume associated with a Transfer Error event (i.e., 15,000 gallons), excluding waste tanks in Non-Acidic Chemical Cleaning Mode, and associated instrument uncertainties.

The liquid level, as it relates to flammability, is a key element in the time to LFL (CLFL for Tank 50) calculations/determinations, and thus, the flammability classification determination of the waste tanks (Rapid Generation Tank, Slow Generation Tank, Very Slow Generation Tank). The Flammability Control Program determines and tracks the time to LFL (CLFL for Tank 50)

in each waste tank. Structural integrity fill limits are applied to the older tanks to prevent rupture at the highest stress locations (i.e., the knuckle region) and those tanks with identified cracks (limit the stress load that could cause unstable ductile tearing at the crack tips). For waste tanks that do not have an operating waste tank mixing device or waste tank mixing device operation in a waste tank containing only slurried sludge and the specific waste tank mixing device has been operated within (less than or equal to) 180 days, waste tank fill limits (maximum fill limit per Table 3.4-2) protect the vapor space volume to ensure flammable transients do not pose a safety concern. Other waste tank level limitations for protection of flammable transients are performed by the Gas Release Program (see Section 5.5.4.2.29) and are not part of the criteria for HLLCP setpoint determination. For Waste Tank 1-4 and 7-12, fill limits protect assumed initial conditions to prevent a siphon event. For waste tanks in Non-Acidic Chemical Cleaning Mode, the fill limits (with maximum levels less than or equal to 63.8 inches [Type I] and 64.8 inches [Type II]) provide controls to protect a maximum annulus equilibrium liquid level (following a tank wall breach).

Because this program relies upon several different types of administrative controls and cannot be performed by an SSC, it is designated a SAC.

5.5.4.2.44.3 Functional Requirements

Calculation of the waste tank fill limit, as described above, is performed by Engineering. This SAC relies on the HLLCPs (Sections 2.4.1.3, 2.6.1, and 5.5.2.4) for tank level alarms. This SAC also relies on the WCS (Section 5.5.4.2.32), TSR LCO 3.8.4 “Waste Storage Tank Level,” and the Flammability Control Program (Section 5.5.4.2.27) for implementation. Waste tank level determination, calculation of waste tank fill limits, and data entry are routine tasks and are governed by existing training and procedures.

5.5.4.2.44.4 SAC Evaluation

Calculations require independent verification and are performed in accordance with established procedures. Waste tank fill limits are maintained within WCS and the most restrictive of the fill limits is identified for each waste tank. Each tank's fill limit is protected by placement of its HLLCP. The current HLLCP locations are documented in the ERD (Ref. 46).

5.5.4.2.45 OIL CONTROL PROGRAM (ADMINISTRATIVE CONTROL 5.8.2.45)

Programmatic controls shall be established to prevent the introduction (e.g., via air compressors, transfer pumps, waste tank mixing devices) of significant flammable vapors from lubricating or hydraulic oil into analyzed vapor spaces (e.g., evaporator pots, evaporator cells, transfer facilities, waste tanks, and waste tank annuli).

This program is designated as a Programmatic Controls Administrative Control. Although this program is part of a bounding condition in DBAs, the program provides a broad safety management function to prevent introduction of unanalyzed organic vapors into various Process Areas. This program is supported by organizational procedures and other programs (e.g., QA and procurement). Therefore, this program does not warrant identification as a SAC.

5.5.4.2.46 DELETED

5.5.4.2.47 VENTILATION SYSTEM PERFORMANCE MONITORING (SPECIFIC ADMINISTRATIVE CONTROL 5.8.2.50)

5.5.4.2.47.1 Safety Function

The safety function of the Ventilation System Performance Monitoring SAC is to ensure that any HEPA filter that is credited as a mitigating control is capable of performing its credited function.

Ventilation System Performance Monitoring is credited as a second level of control in the following Chapter 3 accidents:

- Transfer Error/SMP Waste Release (Section 3.4.2.9)
- Aerosolization Events (Section 3.4.2.10)
- Waste Tank/Pump Tank Overheating (Section 3.4.2.13)
- Waste Tank Wall Failure (Section 3.4.2.14)

This SAC serves an SS function for these Chapter 3 accidents.

5.5.4.2.47.2 SAC Description

Ventilation System Performance Monitoring is required when HEPA filtration is credited as a control in an active ventilation system for mitigating an event, as defined in Chapter 3. HEPA filters are susceptible to plugging and possible breakthrough when subjected to high moisture loading, which would render the filter incapable of performing its intended function. Ventilation System Performance Monitoring ensures that the HEPA filter is operating properly, and capable of performing its credited function. The requirements of this program are in addition to the requirements associated with ventilation LCOs.

Ventilation System Performance Monitoring checks the ventilation system periodically to ensure that HEPA filter plugging or breakthrough has not occurred. Monitoring exhaust HEPA filter differential pressure ensures that the filter does not become overloaded to the point at which breakthrough could occur and monitoring of the downstream airborne activity, if required, is intended to detect radioactive material downstream of the filter before presenting a significant level of concern.

Monitoring shall be performed prior to beginning the evolution to establish baseline conditions, and periodically thereafter. Short duration activities that are less than 24 hours in duration (e.g., jetting a sump) are not considered sufficient to render a HEPA incapable of performing its safety function (Ref. 76) and thus periodic monitoring is not required. Monitoring is only required prior to and after the completion of a short duration activity. The required frequency of monitoring and parameters monitored shall be adjusted based on the availability of equipment to remove moisture and condition the exhaust flow (i.e., condenser or reheater) before passing through the HEPA filter. Monitoring of downstream airborne activity is only required if the ventilation system condenser or reheater is not in service or is non-functional, and provides an

indication of contamination migrating downstream of the HEPA filter. Performance monitoring is required as specified below.

Evolution	Performance Monitoring Required	Parameters to be monitored	Accident Reference
High-Rem Waste Transfer through a Type I or II tank annulus	During the evolution if the annulus ventilation system is operating	Exhaust HEPA filter differential pressure or annulus pressure, and downstream airborne activity	Transfer Error/SMP Waste Release
Waste transfer or liquid addition into a pump tank	During the evolution	Exhaust HEPA filter differential pressure and downstream airborne activity [(a)]	Transfer Error/SMP Waste Release
Waste transfer from a pump tank	During the evolution	Exhaust HEPA filter differential pressure and downstream airborne activity [(a)]	Transfer Error/SMP Waste Release
Air or steam jet transfer from a pump tank	While air or steam is aligned to the jet	Exhaust HEPA filter differential pressure and downstream airborne activity [(a)]	Aerosolization, Waste Tank/ Pump Tank Overheating
Air or steam jet transfer from a PP sump	While air or steam is aligned to the jet	Exhaust HEPA filter differential pressure and downstream airborne activity [(a)]	Aerosolization
Air or steam jet transfer from a DB sump (applies only to HDB-6, HDB-7, and HDB-8)	While air or steam is aligned to the jet	Exhaust HEPA filter differential pressure and downstream airborne activity [(a)]	Aerosolization
Air or steam jet transfer from a waste tank	While air or steam is aligned to the jet	Exhaust HEPA filter differential pressure and downstream airborne activity [(a)]	Aerosolization, Waste Tank/ Pump Tank Overheating
Air or steam jet transfer from a waste tank annulus	While air or steam is aligned to the jet	Exhaust HEPA filter differential pressure and downstream airborne activity	Aerosolization, Waste Tank/ Pump Tank Overheating
Operating waste tank mixing devices in a Type I, II, III, IIIA, or IV Waste Tank	While mixing device is operating	Exhaust HEPA filter differential pressure and downstream airborne activity [(a)]	Aerosolization

Evolution	Performance Monitoring Required	Parameters to be monitored	Accident Reference
Pulse tube agitator operation	During the evolution	Exhaust HEPA filter differential pressure and downstream airborne activity [(a)]	Aerosolization
Type I/II Waste Tank in Acidic Chemical Cleaning Mode (annulus ventilation)	While waste tank is in Acidic Chemical Cleaning Mode	Exhaust HEPA filter differential pressure and downstream airborne activity [(a)]	Waste Tank Wall Failure

(a) Downstream airborne activity monitoring is only required if the ventilation system condenser or reheater is not in service or is non-functional.

This control was designated as a SAC due to variations in ventilation system configuration and variations in processing activities / stored waste forms which make a single ventilation design impractical. Since it is not practical to design and install a single ventilation system on all tanks that satisfies all conditions while ensuring that credited HEPA filters are capable of performing their credited functions, a Ventilation System Performance Monitoring Program was developed and implemented as a SAC.

5.5.4.2.47.3 Functional Requirements

HEPA filter differential pressure gauges are IPI or M&TE equipment as described in Section 5.5.4.2.7. Radiation detection instrumentation is controlled as Radiation Monitoring Equipment per site standards.

5.5.4.2.47.4 SAC Evaluation

Compliance with the SAC ensures the ventilation system can perform its safety function. If the performance criteria in the above table are not met, the relevant ventilation LCO applies.

5.5.4.2.48 INHALATION DOSE POTENTIAL CONTROL (SPECIFIC ADMINISTRATIVE CONTROL 5.8.2.51)

5.5.4.2.48.1 Safety Function

The safety function of this SAC is to ensure that the Inhalation Dose Potential is within analyzed values.

The Inhalation Dose Potential protects bounding initial assumptions (e.g., MAR) for applicable Chapter 3 events. This SAC serves an SC/SS function for Chapter 3 accidents.

5.5.4.2.48.2 SAC Description

The Inhalation Dose Potentials shall be within analyzed values as discussed below. An analytical uncertainty of 2 Sigma shall be included in verifications against the analyzed values discussed below (additional information and exceptions are given in Section 5.3).

Reference 40 demonstrates that of the Type IV Waste Tanks, only Tanks 21 and 22 have the potential to exceed the analyzed inhalation dose potential for Type IV tank slurry (1.0E+07 rem/gal). Therefore, prior to initiating sludge mixing activities within Tank 21 or Tank 22, an evaluation shall be performed to verify that the resultant slurry will not exceed an inhalation dose potential of 1.0E+07 rem/gal.

Reference 29 demonstrates that for tanks where the sludge mass exceeds 4.36E+04 kilograms and the sludge source dose exceeds 9.0E+05 rem/gram, the resultant slurry may exceed the analyzed inhalation dose potential of 1.5E+09 rem/gal. Therefore, prior to initiating sludge mixing activities within tanks meeting this criteria, an evaluation shall be performed to verify that the resultant slurry will not exceed an inhalation dose potential of 1.5E+09 rem/gal.

The inhalation dose potential of waste transferred to the 241-96H ARP Facility shall be less than or equal to 1.4E+06 rem/gal to protect the analyzed consequences of the facility (Ref. 70).

Chapter 3 requires that the waste material in Tank 50, Tank 50 VB, and the receipt transfer lines into Tank 50 contain no more than the bounding Tank 50 Supernate inhalation dose potential of 2.09E+05 rem/gal.

The inhalation dose potential of waste transferred through the 242-16H Evaporator Cell shall be less than or equal to 9.8E+07 rem/gal. Waste Transfers through the 242-16H Evaporator Cell have not been analyzed for inhalation dose potentials greater than 9.8E+07 rem/gal.

The inhalation dose potential of waste transferred to the evaporators shall be less than or equal to 3.3E+07 rem/gal (242-16H) and 3.7E+07 rem/gal (242-25H) to protect the analyzed consequences. Ensuring that sludge solids carryover does not occur (maximum 1 wt. % sludge) as discussed in Section 5.5.4.2.19 ensures compliance with the evaporator feed/bottoms inhalation dose potential.

Due to the nature of the Inhalation Dose Potential Control Program (i.e., the calculations and tracking of each tank status), this function cannot be performed by a particular SSC. Therefore, it is classified as a SAC.

Equipment required to implement this SAC includes the laboratory analysis equipment, as described in Section 5.5.4.2.7.

5.5.4.2.48.3 Functional Requirements

The Inhalation Dose Potential Control Program utilizes waste characterization data in WCS as input to inhalation dose potential calculations. Planned evolutions that have the potential to affect inhalation dose potential results are evaluated.

5.5.4.2.48.4 SAC Evaluation

Calculations require independent verification and are performed in accordance with established procedures. Prior to initial slurrying of a sludge tank, inhalation dose potential calculations are performed to ensure that agitation device depth and supernate volume are sufficient to protect the limit. Characterization data within WCS is typically used as an input to the calculation.

5.5.4.2.49 242-16H EVAPORATOR CHEMICAL CLEANING (SPECIFIC ADMINISTRATIVE CONTROL 5.8.2.52)

5.5.4.2.49.1 Safety Function

The safety function of this SAC is to ensure that acidic material, used during the chemical cleaning process of the 242-16H Evaporator, is not added to a waste tank and cause potential degradation of the waste tank or cooling coils, cause an increase in heat load from neutralization, or cause an increase in hydrogen generation rate. Acid addition to the evaporators is also a potential criticality concern as discussed in Chapter 6.

This SAC is a credited first level of control or bounding initial condition in the following Chapter 3 accidents:

- Waste Tank Explosion (Section 3.4.2.11)
- Waste Tank Annulus Explosion (Section 3.4.2.12)
- Waste Tank/Pump Overheating (Section 3.4.2.13)
- Waste Tank Wall Failure (Section 3.4.2.14)
- Waste Tank Siphon/Pump-Out (Section 3.4.2.15)
- Seismic Event (Section 3.4.2.18)

This SAC serves an SC function for these Chapter 3 accidents.

5.5.4.2.49.2 SAC Description

The following controls shall be implemented during chemical cleaning of the 242-16H Evaporator:

1. Prior to adding acid to the evaporator vessel and while the vessel contains acidic material (i.e., pH less than 7.0), double valve isolation shall be established between the evaporator vessel and the evaporator drop tank.

   Transfers out of the evaporator vessel shall be permitted only when the pH is greater or equal to than 7.0. The pH may be considered greater than or equal to 7.0 when adequate caustic addition and mixing have occurred, or verified by sampling.

2. Prior to transfer initiation from the Evaporator cell sump to Tank 43, the cell sump contents shall be verified, via sampling, to have a pH greater than or equal to 7.0.

This program was designated a SAC due to the variety of requirements, which cannot be accomplished using an engineered safety system. The following equipment is relied upon to implement this SAC:

- Laboratory analysis equipment or litmus paper (Section 5.5.4.2.7)
- Transfer line/evaporator isolation valves (Section 2.4.4)
- Evaporator vessel level and lance air flow instrumentation (Section 2.4.2)

Adequate conservatism exists for this SAC due to requiring positive isolation (e.g., double valve isolation) of the Evaporator from the waste tanks. Additionally, waste tank sampling via the Corrosion Control Program (Section 5.5.4.2.13) gives additional assurance that the safety function of this SAC is met.

5.5.4.2.49.3 Functional Requirements

The following assures functionality of equipment used for this SAC:

- Laboratory analysis equipment or litmus paper (Section 5.5.4.2.7)
- Transfer line/evaporator isolation valves – Structural Integrity Program (Section 5.5.4.2.12)
- Evaporator vessel level instrumentation – NMMP (Section 5.5.4.2.9)

The lance air flow instrumentation, used during chemical mixing, is installed for use only during chemical cleaning operations. This instrumentation is not required to be covered by the IPI and M&TE Program or NMMP. The flow instrumentation is used for a short period of time and the vendor provides a qualification of calibration.

5.5.4.2.49.4 SAC Evaluation

Independent verification is required for the double valve isolation stated in Item 1 of Section 5.5.4.2.49.2. Additionally, when performing caustic addition and mixing (without sampling) the following items require independent verification when neutralizing the contents in the vessel:

- Caustic addition amount
- Lance air flow for mixing
- Required minimum mixing time

Calculations require independent verification and are performed in accordance with established procedures. Sample results, if required, are also independently reviewed. This ensures that the safety function of the SAC is met. Laboratory QA practices and sample analysis protocols, as described in Section 5.5.4.2.7, ensure the validity of associated sample results.

Periodic sampling of waste receipt tanks (as part of the Corrosion Control Program as described in Section 5.5.4.2.13) gives additional assurance that the safety function of this SAC is met.

Operations such as valve manipulation and control of the paths from the Evaporator to waste tanks are considered to be routine tasks and are governed by existing procedures.

5.5.4.2.50 WASTE TANK CHEMICAL CLEANING PROGRAM (SPECIFIC ADMINISTRATIVE CONTROL 5.8.2.53)

5.5.4.2.50.1 Safety Function

The safety function of this SAC is to protect bounding conditions or serve as a first level of control within the accident analyses for scenarios related to waste tanks in Acidic Chemical Cleaning Mode and Chemical Cleaning Transfers.

The Waste Tank Chemical Cleaning Program is credited in the following Chapter 3 accidents:

- Transfer Facility Explosions (Section 3.4.2.7)
- Pump Pit and Pump Tank Explosion (Section 3.4.2.8)
- Waste Tank Explosion (Section 3.4.2.11)
- Tornado and High Winds Event (Section 3.4.2.17)
- Seismic Event (Section 3.4.2.18)
- Wildland Fire (Section 3.4.2.19)

This SAC serves an SC/SS function for these Chapter 3 accidents.

5.5.4.2.50.2 SAC Description

In addition to the Transfer Control Program, the following controls shall be implemented during operations associated with waste tanks in Acidic Chemical Cleaning Mode and Chemical Cleaning Transfers. Items 5 and 7 are not part of the SAC (justification provided below).

1. The Transfer Path for Chemical Cleaning Transfers (or related vent/drain operations) shall only be permitted through the following Leak Detection Locations: FDB-2, FDB-3, FDB-4, HDB-2, HDB-7, VB-2, VB-4, VB-5, VB LDB-17, Tank 51 VB, Tank 51 Drain VB, FPP-1, FPP-2, and HPP-3. Chemical Cleaning Transfers that may leak from primary containment to VB-1, VB-3, H-Area Catch Tank, and LDB Drain Cell have also been analyzed (Transfer Paths associated with these locations are permitted to have Chemical Cleaning Transfers).

2. Prior to transfer initiation of a Chemical Cleaning Transfer (or related vent/drain operations), isolation (single leak-tested valve, double valve isolation, or blank) shall be established to preclude Chemical Cleaning Transfers from entering pump tanks, waste tanks, or transfer facilities outside of the intended Transfer Path.

3. During Chemical Cleaning Transfers, acidic waste material from the vent and drain operation shall only be permitted to FPT-1, H-Area Pump Tank (HPT) HPT-3, and the waste tanks associated with the vent/drain path.

4. Prior to transfer initiation of transfer line vent and drain operation associated with a Chemical Cleaning Transfer, verification shall be performed to ensure that sufficient inhibitors are present in the applicable pump tank (FPT-1, HPT-3) to ensure neutralization of the acidic waste.

   An engineering evaluation shall determine the amount of inhibitors required to ensure neutralization in the applicable pump tank (FPT-1, HPT-3).

5. Within 60 days after initiation of a Chemical Cleaning Transfer (or related vent/drain operations), perform one of the following for each VB, DB, PP, LDB Drain Cell, or H-Area Catch Tank that was associated with a Chemical Cleaning Transfer (after completion of the transfer line flushing operation):

   - Verify no level increase has occurred in the applicable transfer facility.
   - Verify the material contained in the applicable transfer facility is non-acidic (i.e., pH greater than or equal to 7).
   - Neutralize the acidic material contained in the applicable transfer facility (i.e., restore pH to greater than or equal to 7).

   If acidic material will be neutralized, an engineering evaluation shall determine the amount of inhibitors required to ensure neutralization in the applicable transfer facility.

6. Prior to transfer initiation from a VB, DB, PP, LDB Drain Cell, or H-Area Catch Tank that was associated with a Chemical Cleaning Transfer (or related vent/drain operations), perform one of the following for the applicable transfer facility:

   - Verify the material contained in the applicable transfer facility is non-acidic (i.e., pH greater than or equal to 7).
   - Neutralize the acidic material contained in the applicable transfer facility (i.e., restore pH to greater than or equal to 7).

   This control shall apply to transfer facility (e.g., sump) transfers as a result of level increase from the time of transfer initiation of a Chemical Cleaning Transfer (or related vent/drain operations) through the applicable transfer facility until Item 5 is complete.

If acidic material will be neutralized, an engineering evaluation shall determine the amount of inhibitors required to ensure neutralization in the applicable transfer facility.

7. Prior to transfer initiation of a Chemical Cleaning Transfer from a waste tank in Acidic Chemical Cleaning Mode, an engineering evaluation (accounting for waste tank mixing device operation to ensure adequate mixing of contents) shall be performed to ensure the OA content in the waste tank is less than or equal to 4 wt. %.

8. Prior to waste tank mixing device operation in waste tanks in Acidic Chemical Cleaning Mode, verification shall be performed to ensure that sufficient water has been added to the waste tank to ensure the OA content in the waste tank (once mixed) will be less than or equal to 4 wt. %.

9. Prior to transfer initiation of a Chemical Cleaning Transfer (or related vent/drain operations), verification shall be performed to ensure that sufficient inhibitors are present in the applicable receipt waste tank to ensure neutralization of the acidic waste.

10. During receipt of Chemical Cleaning Transfers (or related vent/drain operations), at least one waste tank mixing device shall be operating in the applicable receipt waste tank to ensure adequate mixing and neutralization of the acidic waste.

11. During receipt of Chemical Cleaning Transfers, acidic waste shall enter the receipt tank via a flowpath that is below the waste tank liquid level.

This program was designated a SAC due to the variety of requirements, which cannot be accomplished using an engineered safety system.

Adequate conservatism exists for controls within this SAC based on the following:

- Items 4, 5, and 6 – The methodology of the neutralization calculations use conservative values (e.g., assuming maximum acidic concentrations, maximum potential volumes, ignoring initial caustic condition).
- Items 4, 5, 6, and 8 – Some reduction of the original 8 wt. % OA introduced to the waste tank will occur during the process.
- Item 8 – The methodology for determining water dilution assumes the entire volume of OA added was at 8 wt. %. This methodology also does not account for the sludge heel volume.
- Item 9 – Waste tank (receipt tank) contents are normally at caustic levels.

Items 5 and 7 do not warrant identification as a SAC based on the following:

Items 5 and 7 – Controls protect a bounding initial condition to prevent corrosion induced hydrogen generation contribution within transfer facilities. However, failure of a very

robust SSC (e.g., core pipe) or violations of other SACs/ACs (e.g., Transfer Path alignment), would have to occur to have acidic waste in the transfer facility. Additionally, other credited (transfer monitoring) and non-credited (leak detection instrumentation) controls/SSCs are available to indicate leakage to a transfer facility. "Drip-wise" leakage could allow a small amount of acidic material; however, it would take a long time (greater than 70 days for 4 wt. % OA) before corrosion induced hydrogen would start contributing to the flammable vapor concentration and even longer before a potential event could occur (introduction of the acidic waste does not initiate the event [i.e., transfer facility explosion]). Additionally, the transfer facilities have stainless steel components (e.g., liners, valves, connectors) and some transfer facilities have installed ventilation systems (to minimize flammable vapor accumulation). Also this program does not involve time critical operator actions.

5.5.4.2.50.3 Functional Requirements

Equipment used for this SAC includes inhibitor addition container(s) and transfer equipment. This equipment is not required to be covered by the IPI and M&TE Program or NMMP. Failure of the equipment will not result in failure of the SAC safety function as independent verification of the actual addition will be required.

Additional equipment relied upon to implement this SAC (with corresponding DSA description section), dependent upon the particular control, includes the following:

- Laboratory analysis equipment or litmus paper (Section 5.5.4.2.7)
- Inhibited Water System (including flow/amount indication) (Section 2.8.2.6)
- Flush Water System (including flow/amount indication) (Section 2.8.2.4)
- Transfer line isolation valves (Section 2.4.4)
- Transfer lines (Section 2.4.4)
- Waste tank level measurement devices (Section 2.4.1.3)
- Secondary containment conductivity probes and dip tubes (Section 2.4.4)
- Inspection cameras

The following assures functionality of equipment used for this SAC (excludes equipment covered by Chapter 4 or the TSR):

- Laboratory analysis equipment (Section 5.5.4.2.7)
- Waste tank reel tapes and radar - NMMP (Section 5.5.4.2.9)
- Inhibited Water System flow/amount indication - NMMP (Section 5.5.4.2.9)
- Flush Water System flow/amount indication - NMMP (Section 5.5.4.2.9)
- Secondary containment dip tubes - NMMP (Section 5.5.4.2.9)
- Pump tank dip tubes – NMMP (Section 5.5.4.2.9)

Some controls within this SAC rely upon the content (wt. %) and volume of OA added to the waste tank. Procurement and QA Program practices, along with verification of the Certificate of Analysis for the OA (for wt. %, volume, and temperature) is sufficient to ensure that OA additions to the waste tank will be made at less than or equal to 8 wt. % at the specified volume. As discussed previously, controls within this SAC conservatively assume all OA additions are made at a maximum of 8 wt. %. Laboratory QA practices and sample analysis protocols, as described in Section 5.5.4.2.7, ensure the validity of associated sample results.

5.5.4.2.50.4 SAC Evaluation

The actions of this SAC are considered to be routine tasks using existing procedures, and no unique human factors considerations exist beyond those described in Chapter 13. Calculations require independent verification and are performed in accordance with established procedures.

The following items require independent verification:

- Items 2 and 11 – Transfer Path alignment
- Items 4, 6, and 9 - Inhibitor addition amount (calculated value and actual addition value)
- Item 4 - Inhibitor addition path to the pump tank
- Item 6 – Sample results, if applicable (independent review)
- Item 6 – Litmus paper tests for verifying material is non-acidic
- Item 8 – Volume of OA added to the treatment tank (independent verification is required for each OA tanker addition and for the total amount of OA for determining the amount of dilution water)
- Item 8 – Volume of dilution water needed (based upon adding a volume equal to or greater than the volume of OA added to the waste tank)
- Item 8 – Volume of dilution water (actual addition value)
- Item 8 – Dilution water source lineup, if a totalizer is used for volume determination
- Item 10 – Waste tank mixing device operation

5.5.4.2.51 MERCURY MANAGEMENT PROGRAM (SPECIFIC ADMINISTRATIVE CONTROL 5.8.2.54)

5.5.4.2.51.1 Safety Function

The safety function of the Mercury Management Program is to limit the quantity of mercury in the 242-16H and 242-25H Evaporator MRTs and associated collection systems to minimize the quantity of mercury available for release. The Mercury Management Program serves as a bounding initial condition for Chemical Release events associated with Evaporator Overheads Receiver Systems (Section 3.4.2.21). This SAC serves an SS function for these events.

5.5.4.2.51.2 SAC Description

The Mercury Management Program shall ensure contaminated mercury is not stored in the 242-16H and 242-25H Evaporator Mercury Collection Stations when not collecting mercury.

During performance of the mercury collection procedure, operators will place bottles filled with mercury in a secured, properly sealed, UN 1A2 rated container and immediately transport the container to a Satellite Accumulation Area. However, in the event of an emergency (e.g., fire, tornado/high winds, seismic), operators may leave bottles filled with mercury at the mercury collection station during the emergency conditions. This is acceptable since it does not have a significant impact on the analyzed accident progressions (e.g., NPH events are not an initiator for an evaporator overheads receiver cell fire).

This program was designated a SAC due to the variety of requirements, which cannot be accomplished using an engineered safety system.

5.5.4.2.51.3 Functional Requirements

The actions of this SAC are considered to be routine tasks and are governed by existing procedures and training. No unique human factors considerations exist beyond those described in Chapter 13.

5.5.4.2.51.4 SAC Evaluation

Second person verification is required to ensure the safety function is met. This verification is required to ensure mercury collected is not stored at the mercury collection stations.

5.5.4.2.52 CONDUCT OF OPERATIONS PROGRAM (ADMINISTRATIVE CONTROL 5.8.2.55)

A Conduct of Operations Program shall be established to address the applicable topical areas from DOE requirements. The Facility shall follow site and Facility procedures for implementing Conduct of Operations.

This program is designated as a Programmatic Controls Administrative Control. This program is part of a broad safety management program and is not part of a first or second level of control or bounding condition in DBAs. Therefore, this program does not warrant identification as a SAC.

5.5.5 MINIMUM SHIFT CREW

The minimum shift crew encompasses the specific positions that must be manned to 1) monitor and respond to credited alarms, 2) perform TSR SRs, Required Actions, and ACs, and 3) respond to abnormal events (e.g., NPH events). For response to abnormal events, the Seismic Event (Section 3.4.2.18) response is considered bounding in terms of required operator response for the manual actions assumed by the safety analysis identified in Chapter 3 accidents (e.g., shutdown of processes, securing transfers). Reference 33 evaluated the various aspects for operator actions and response and derived the minimum shift crew required.

All personnel included in the minimum shift crew composition shall meet the requirements of the position each is filling per site procedures. Below is a summary of the minimum shift crew documented in Reference 33. Impacts to the minimum shift crew shall be evaluated, for proposed activities, as part of the USQ review process.

A minimum of one Shift Manager/First Line Manager/Control Room Manager shall be present in H-Area and one in F-Area to provide direction of the priorities and control the operations of the control room and the field. The required Shift Manager/First Line Manager/Control Room Manager in F-Area and H-Area shall be located within the F-Area and H-Area boundaries as described in Reference 33. A minimum of three Control Room Operators (CROs) [two CROs in 241-2H, one CRO in 241-28H] shall be present in the control rooms to monitor and respond to DSA credited alarms. An additional CRO shall be provided for each additional control room (i.e., 241-18F prior to migration into 241-2H) or mobile/portable control room (e.g., Electrical Equipment Skid) that contains a DSA credited alarm. Any control room that contains DSA credited alarms must be continuously manned.

The minimum required CROs shall be located within the control room boundaries described in Reference 33. Development of these boundaries considers the ability of the CROs to respond to credited audible alarms.

A minimum of seven Field Operators are required for the CSTF. The Field Operators will be available to both H-Area and F-Area; however, a minimum of two Field Operators will be located in F-Area and a minimum of two Field Operators will be located in H-Area. The remaining Field Operators will be allocated to F-Area or H-Area at the discretion of the Shift Manager/First Line Manager/Control Room Manager, considering the location of ongoing Operational Conditions. The minimum required Field Operators shall be located within the F-Area and H-Area boundaries as described in Reference 33.

A minimum of two Radiological Control personnel are required for the CSTF to determine releases due to spills and recommend any necessary actions. The Radiological Control personnel may be located in either area but will be available to both H-Area and F-Area. The location of the Radiological Control personnel is at the discretion of the Shift Manager/First Line Manager/Control Room Manager, considering the location of ongoing Operational Conditions. A minimum of one Industrial Hygiene person (or Radiological Control person qualified to perform Industrial Hygiene monitoring) is required for the applicable area (H-Area and/or F-Area) when a waste tank is in Acidic Chemical Cleaning Mode or when performing Chemical Cleaning Transfers (or related vent/drain operations) to determine mercury releases due to events (e.g., loss of ventilation) and recommend any necessary actions.

Shift crew composition may be less than the minimum requirements for a period of time not to exceed 2 hours in order to accommodate unexpected absence/incapacitation of on-duty shift crew members provided immediate actions are taken for the following:

- Ensure each control room that contains a DSA credited alarm is manned.
- Restore the shift crew composition to within the minimum requirements.

The minimum operators required (three location-dependent CROs, one additional CRO for each additional control room that contains a DSA credited alarm, and seven total Field Operators) discussed above are adequate for up to and including seven simultaneous Operational Conditions in the CSTF (F-Area and H-Area combined). One additional operator (CRO or Field Operator) shall be added to the shift complement for every additional Operational Condition. As developed in Reference 33, each of the following are considered Operational Conditions for the purposes of determining the minimum required operators:

1. Waste Transfers (excluding transfers from sumps and recycle transfers on operating evaporators). A Waste Transfer between F-Area and H-Area Tank Farms via the Inter-Area Line shall be counted as two Operational Conditions.

2. Evaporator operation (recycle transfer is part of evaporator operation and need not be counted as an additional Operational Condition if the evaporator is operating during the recycle transfer)

3. Waste storage tank mixing activity (i.e., waste tank mixing device operation)

   Operation of one or multiple waste tank mixing devices on an individual waste storage tank is considered one Operational Condition.

4. Waste storage tank in Acidic Chemical Cleaning Mode

5. Waste storage tank that can become flammable in less than 24 hours following a seismic event (Priority 1 waste tank)

6. Waste storage tank recirculation activity (i.e., transfer pump operation associated with waste tank recirculation) in a waste tank containing saltcake

7. Operation of Tank 48 except during Non-Inerted Operation

8. Receipt of a steam jetted transfer into a pump tank from a source greater than 1,200 gallons (excluding pump tanks receiving canyon transfers). The transfer associated with this item shall be counted as an additional Operational Condition.

9. Waste storage tank liquid addition activity greater than or equal to 3,000 gallons in a waste tank containing saltcake (excluding liquid addition activities associated with Operational Conditions 1, 2, and 10)

   This Operational Condition is associated with a planned single liquid addition activity greater than or equal to 3,000 gallons into a waste tank containing saltcake. Although cumulative liquid additions greater than or equal to 3,000 gallons may be approved (via the specific engineering evaluation) for an individual waste tank, this Operational Condition applies to the specific individual planned liquid addition activity.

10. Operation of the Dissolution Water Skid in a waste tank containing saltcake

5.5.6 MERCURY MONITORING SYSTEMS TECHNICAL SAFETY REQUIREMENT DERIVATION

The major accident associated with mercury releases and associated mercury monitoring as detailed in Section 3.4, is as follows:

- Chemical Release

Refer to Chapter 3 for a detailed description of the events (initiating events, event progressions, etc.) related to mercury monitoring. Table 5.9-1 identifies the SSCs and ACs that must function to prevent/mitigate the mercury release events and that were evaluated for TSR coverage.

5.5.6.1 242-16H and 242-25H Evaporator Mercury Inventory (Limiting Condition for Operation 3.6.1)

Chapter 3 credits periodic mercury monitoring for Chemical Release events to verify mercury inventory initial conditions in the MRT and associated collection system are protected. Limiting the mercury inventory to a safety analysis value of less than 1.3 liters ensures that mercury quantity meets the "Quantity Exclusion" screening criteria for an event, as described in Chapter 3.

Evaporator mercury monitoring is provided by an installed sight glass located at the end of the MRT drain line. Considering the mercury inventory safety analysis value of less than 1.3 liters, the TSR LCO value for mercury inventory in the MRT drain line sight glass shall be less than or equal to 750 ml. The LCO value is based on engineering judgment and no specific uncertainty analysis is required due to the large differential between the safety analysis value and LCO value.

Therefore, this LCO requires that that the mercury inventory in the MRT drain line sight glass be less than or equal to 750 ml and that the MRT drain line sight glass is operable. An operable MRT drain line sight glass shall be capable of detecting mercury inventory in the MRT and associated collection system (to provide local indication). To be operable, the MRT drain line sight glass shall be aligned to the MRT and the MRT drain line shall not be plugged (to the extent that mercury detection capability is prevented). This LCO is required for the 242-16H Evaporator and 242-25H Evaporator. This LCO is applicable during Operation Mode for evaporators.

In the event the mercury inventory in the MRT drain line sight glass is greater than 750 ml or the MRT drain line sight glass is inoperable, actions shall be taken to restore the inoperable equipment or ensure that the mercury inventory is restored to less than or equal to 750 ml. This action shall be taken in a timely manner to minimize the amount of additional mercury allowed to accumulate, with consideration given for adequate time to drain and collect mercury from the evaporator MRT.

If actions to restore the mercury inventory or the inoperable equipment cannot be completed, then the following actions shall be taken on the affected evaporator:

1. Immediately isolate steam to the tube bundle and lance.

2. Immediately stop waste feed to the evaporator pot.

3. Immediately establish a fire watch in the vicinity of the MRT and associated collection system.

Isolating steam to the tube bundle/lance and stopping waste feed to the evaporator pot stops the source of the mercury production. Establishing a fire watch in the vicinity of the MRT and associated collection system ensures that incipient fires are rapidly detected and minimizes the potential for the fire to propagate. This minimizes the potential for component damage and subsequent release of mercury.

5.5.6.1.1 VERIFICATION OF MERCURY INVENTORY (SURVEILLANCE REQUIREMENT 4.6.1.1)

Chapter 3 credits the MRT and associated collection system to have a maximum mercury inventory. Since LCO 3.6.1 requires a maximum mercury inventory for the evaporators, verification on a routine basis is required.

5.5.6.1.2 FUNCTIONAL LIQUID DRAIN CHECK OF MRT DRAIN LINE SIGHT GLASS (SURVEILLANCE REQUIREMENT 4.6.1.2)

A functional liquid drain check of the MRT drain line sight glass shall be performed to ensure that the sight glass is capable of detecting mercury inventory in the MRT and associated collection system. This surveillance ensures that a sight glass that is inoperable due to inadvertent isolation or plugged drain line from the associated MRT is detected. This check shall verify that liquid can freely drain (stream of liquid versus individual drops of liquid) from the line when the sight glass drain valves are opened. This surveillance frequency shall be based on operational experience and engineering judgment and considered adequate to ensure that the MRT drain line sight glass can perform its intended safety function.

5.5.6.1.3 CALIBRATION VERIFICATION OF MRT DRAIN LINE SIGHT GLASS GRADUATED SCALE (SURVEILLANCE REQUIREMENT 4.6.1.3)

The MRT drain line sight glass has a graduated scale located on a sight glass rod adjacent to the sight glass window. Although the graduated scale is mechanically secured next to the sight glass, the scale could be inadvertently moved. Therefore, the calibration of the MRT drain line sight glass graduated scale shall be verified periodically to ensure that the sight glass is accurately indicating mercury inventory in the MRT and associated collection system. This surveillance may be performed through a bench test or by an in-place test which shows that the sight glass volume and corresponding graduated scale are within acceptable tolerances. Based on the large differential between the mercury inventory safety analysis value and LCO value, an accuracy tolerance of plus or minus 25 ml is judged to be acceptable. This surveillance frequency shall be based on engineering judgment and shall be sufficient to provide reasonable assurance that the MRT drain line sight glass can perform its design safety function.

5.6 DESIGN FEATURES

This section identifies and describes the design features not specifically required to have TSRs, specifically SLs, LCSs or LCOs as required by 10 CFR 830 and DOE G 423.1-1A (Ref. 1, 6). The order defines design features as "those passive features not covered elsewhere in the TSR that, if altered or modified, would have a significant effect on safety." The two areas required to be addressed by the DOE Guide are vital passive components and configuration/physical arrangement (Ref. 6).

5.6.1 VITAL COMPONENTS

Components such as piping, valves, vessels, supports, and confinement structures are components, which, if altered, could have an effect on safety. The components identified in Table 5.9-1 are credited in the safety analysis as performing a preventive or mitigative function. TSR ACs shall be established to assure programmatic controls, as applicable, of Nuclear Maintenance Management (Section 5.5.4.2.9), Structural Integrity (Section 5.5.4.2.12), and Corrosion Control (Section 5.5.4.2.13). Table 5.9-1 also references Chapter 4 sections that provide more information on these design features.

5.6.2 CONFIGURATION AND PHYSICAL ARRANGEMENT

Configuration and physical arrangement of components and structures in the CSTF have been credited in the safety analysis. The configuration and physical arrangement of the SSCs listed in Table 5.9-1 are discussed in Chapters 2 and 4. TSR ACs shall be required to programmatically control the Configuration Management Program (Section 5.5.4.2.8).

5.6.3 SITE CHARACTERISTICS

The location of the CSTF, with respect to the site boundary, is a feature that is utilized in the analysis of the accident consequences to the public and workers. Changes in the site boundary would have an effect on the calculated accident consequences. Therefore, the location of the CSTF meets the definition of a design feature. The location of the CSTF is described in Chapter 1.

5.7 INTERFACE WITH TECHNICAL SAFETY REQUIREMENTS FROM OTHER FACILITIES

The intent of this section is to identify the CSTF interface with other Facility TSRs (or other applicable Safety Basis documentation). The first type of interface involves the transfer of radioactive waste into the CSTF. The second type of interface involves the transfer of radioactive waste out of the CSTF. These interfaces are described further below.

5.7.1 TRANSFER OF RADIOACTIVE WASTE INTO THE CONCENTRATION, STORAGE, AND TRANSFER FACILITIES

Programmatic controls shall ensure that waste streams to be received into the CSTF (or transferred through the CSTF from an outside sender) is within the analyzed limits and requirements of the CSTF WAC (see Section 5.5.4.2.15) and is performed in accordance with the applicable CSTF-approved WCP (or other approved engineering document). If the material does not meet the WAC requirements, an USQ review (or equivalent) shall be performed and approved by CSTF prior to transferring the material.

Transfers from ETP to Tank 50 have been evaluated against the facility WAC or Safety Basis restrictions. This waste stream has been shown to meet the non-waste transfer criteria described in Section 3.4.1.5.1 and, therefore, need not be considered a Waste Transfer nor require transfer controls.

In addition to the CSTF WAC, the following interface controls are required within the appropriate waste sender's Safety Basis to protect the CSTF safety analysis assumptions. The following requirements are not part of the SAC unless specifically noted.

1. Notification shall be provided to (and concurrence received from) the CSTF Shift Manager/First Line Manager/Control Room Manager prior to intended transfers to the CSTF.
2. The equipment needed to stop transfers, siphons, and liquid additions to the CSTF shall be available to respond to indications of a primary containment waste release. This requirement is a SAC.
3. When transferring material to the CSTF with an inhalation dose potential greater than 2.0E+08 rem/gal the following shall be required:
   a. For facilities that own the leak detection capability of a CSTF owned transfer line (e.g., H-Canyon transfers to the CSTF), leak detection with control room alarm shall be operable within the LDBs associated with the Transfer Path. This requirement is a SAC.
   b. Two physically separated functional transfer isolation devices shall be identified. The transfer isolation devices shall be sufficiently separated (by distance) such that the availability of one isolation device is maintained.

   When determining the inhalation dose potential for comparison to the limit, an analytical uncertainty of 2 Sigma shall be included (additional information and exceptions are described in Section 5.3).

4. Transfers into the CSTF shall be secured as a result of a tornado warning, tornado watch, or high wind warning for the CSTF as issued by the SRS Operations Center. This requirement is a SAC.
5. Transfers into the CSTF shall be secured following a seismic event. This requirement is a SAC.
6. Transfers into the CSTF shall be secured following notification of a CSTF wildland fire event. This requirement is a SAC.
7. Transfers into the CSTF shall be secured following notification of a CSTF control room abandonment event. This requirement is a SAC.
8. For evolutions not intended for the CSTF, sound isolation (single leak-tested valve, double valve isolation, blank, or jumper removal) shall be required. Where sound isolation is not possible, notification shall be given to (and concurrence received from) the CSTF Shift Manager/First Line Manager/Control Room Manager of the potential for an unintended transfer prior to the intended transfer.
9. Notification shall be given to (and concurrence received from) the CSTF Shift Manager/First Line Manager/Control Room Manager prior to performing excavations potentially affecting CSTF transfer lines.

It is recognized that implementation of these interface controls (surveillances, etc.) may be different for the sending facility and receiving facility, even for the same SSC. These differences are considered acceptable provided the required safety functions are met as applicable for each of the involved facilities.

Items 2, 3.a, 4, 5, 6, and 7 are identified as SACs. These requirements protect bounding conditions or serve as a first or second level of control within the accident analyses. The indicated controls were designated as SACs due to the variety of requirements, which cannot be performed by an SSC.

Items 1, 3.b, 8, and 9 do not warrant identification as a SAC based on the following:

Items 1 and 9 – Control provides the programmatic control for notification/concurrence of intended transfers or excavations; however, the control is not part of a first or second level of control or bounding condition in DBAs.

Item 3.b – Control addresses a vulnerability to assure availability of an isolation device; however, the control is not part of a first or second level of control or bounding condition in DBAs.

Item 8 – Control provides the programmatic control for isolation of unintended transfers; however, the control is not part of a first or second level of control or bounding condition in DBAs.

5.7.2 TRANSFER OF RADIOACTIVE WASTE OUT OF THE CONCENTRATION, STORAGE, AND TRANSFER FACILITIES

The primary receivers of CSTF streams include the DWPF, Saltstone Facility, and the ETP. Controls shall be implemented to ensure that the composition of CSTF waste streams is within the analyzed limits of the receiving facility's Safety Basis and is performed in accordance with the applicable receiver and CSTF-approved WCP (or other approved engineering document). If the material does not meet the receiver's Safety Basis requirements, a USQ (or equivalent) shall be performed and approved by the receiving facility prior to transferring the material. The Safety Basis requirements for the primary receivers identified above are discussed in the following documents: DWPF Final Safety Analysis Report (Ref. 34), Saltstone Facility DSA (Ref. 35), and ETP Auditable Safety Analysis (Ref. 36). Interfacing facilities may impose Defense-in-Depth/Important-to-Safety (DID/ITS) hazard controls on the CSTF. Interfacing facility DID/ITS hazard controls are listed in Table 3.3-22 as required.

Prior to each transfer, it shall be verified that the general transfer prerequisites and controls are met along with any specific receiving facility requirements. Specific requirements for the primary receiving facilities are discussed in the following sections (also see requirements of Section 5.5.4.2.15). Transfers from the CSTF have been evaluated against the receiving facility WAC or Safety Basis restrictions. Some waste streams have been shown to meet the non-waste transfer criteria described in Section 3.4.1.5.1 and, therefore, need not be considered Waste Transfers. These waste streams include transfers from CSTF to the Saltstone Facility and transfers of Evaporator Overheads to ETP. Although determined to be non-waste transfer streams within CSTF, these streams shall comply with any/all requirements specified by the receiving facility (e.g., Section 5.7.2.2).

5.7.2.1 Interface With Defense Waste Processing Facility (Specific Administrative Control 5.8.2.47)

5.7.2.1.1 Safety Function

The safety function of this SAC is to ensure that transfers from the H-Area to DWPF are controlled to protect the accident analysis for DWPF.

This SAC serves as a bounding initial condition or first level of control in the DWPF Accident Analysis.

Inter-area transfer lines are used to transport sludge slurry and salt solutions between H-Area and the DWPF. The accidents modeled for inter-area transfers involving DWPF are limited to two possible scenarios. Each of these potential events could lead to the overflow of the receiving tank and/or cell in DWPF. The overflow of the cell (DWPF Low Point Pump Pit or 512-S) would exceed the Onsite and Offsite accident criteria. The two bounding accident scenarios are described below.

- The inter-area transfer pumps in CSTF may run too long, transferring too much sludge to the Low Point Pump Pit sludge tank. This event may be initiated by seismic events, internal equipment failures, or human error.

- Sludge slurry siphoning may occur after an inter-area transfer.

In addition, MCU strip effluent is transferred to DWPF. The strip effluent contains Isopar® L that could be in excess of the concentration limits allowed in DWPF due to flammability concerns.

5.7.2.1.2 SAC Description

Due to the variety of controls described below that are required to implement this SAC, it is not feasible to perform the safety function of this SAC utilizing an SSC.

The following requirements are not part of the SAC unless specifically noted.

To preclude potential accident scenarios in DWPF associated with transfers from waste tanks (Tanks 40 and 49) to DWPF, ACs shall be implemented as follows:

- Provide independent verification that applicable waste transfer pumps are stopped when transfers to DWPF are terminated (not applicable to the flushwater pump).
- Perform one of the following when Waste Transfers to DWPF are terminated to prevent or terminate a siphon (not applicable to line flushing and draining):
  - isolate and vent the transfer route, or
  - provide double valve isolation of the transfer route

  This requirement is a SAC.
- Ensure that CSTF and the receipt facility operators are in constant communication whenever a Waste Transfer System valve lineup allows a transfer and an applicable waste transfer pump or flush water pump is energized.
- Ensure that upon a transfer termination, an instrument shall monitor the supply tank level to sound an alarm if the tank level drops unexpectedly. This instrument does not have to be qualified for post-seismic or post-tornado operation. Upon discovery that the instrument is unavailable to perform this level monitoring, operators shall initiate activities to perform steel taping of the supply tank level on a priority basis consistent with any ongoing emergency response activities.
- Ensure during a tornado/high wind warning, following a tornado/high wind event, or following an earthquake, transfers are terminated and a siphon break established by providing double valve isolation or isolating and venting the transfer route. This requirement is a SAC.

  The following requirement is not part of the SAC. Termination of the transfer includes independent verification that the applicable waste transfer pumps are stopped.
- Provide monitoring and material balance requirements for Waste Transfers to DWPF. If material balance results are outside of these requirements, Waste Transfers to DWPF shall be terminated. This requirement is met by Items 4, 18, and 19 of the CSTF Transfer Control Program (Section 5.5.4.2.21.2).

To preclude the potential for a siphon from Tank 49 during transfers from 241-96H to 512-S, controls shall be implemented as follows:

- Prior to transfer initiation, isolation (double valve isolation, single valve isolation with a vent path, blank, or jumper removed) shall be established. This requirement is a SAC.
- Prior to transfer initiation, independent verification of correct Transfer Path alignment shall be completed.

To preclude exceeding the DWPF SAC limit for Isopar® L concentration, controls shall be implemented as follows:

- Each MCU strip effluent batch shall be characterized for Isopar® L concentration prior to receipt into the DWPF Chemical Process Cell (CPC). This requirement is a SAC.

  Transfer volumes from the SEHT to DWPF are tracked to ensure that the material being transferred into the DWPF CPC meets the DWPF Isopar® L limit. Multiple batches will be required to be transferred from the SEHT before the material is received into the DWPF CPC; therefore, the material is not required to be characterized prior to the batch being sent from the SEHT. The total transfer line volume shall be assumed to be 1689 gallons.
- If the Isopar® L concentration of the MCU strip effluent to be received into the DWPF CPC is characterized as greater than 87 mg/L (accounting for laboratory analysis uncertainty), transfers of strip effluent into the DWPF CPC shall not be initiated until authorized by DWPF. These transfers shall be within the permitted transfer volume as defined by DWPF. This requirement is a SAC.

To preclude potential accident scenarios in DWPF associated with transfers to/from DWPF, the following ACs shall be implemented in CSTF for above-ground waste transfer lines, including excavated transfer lines:

- Radiological Protection Program (Administrative Control 5.8.2.1)
- Emergency Response Program (Administrative Control 5.8.2.2)
- Critical Lift Program (Administrative Control 5.8.2.5)
- Fire Protection Program (Administrative Control 5.8.2.6)
- Traffic Control Program (Administrative Control 5.8.2.14)

5.7.2.1.3 Functional Requirements

Interarea transfers are considered to be routine tasks and are short duration in nature. Existing procedures and training, as well as the Transfer Control Program (Section 5.5.4.2.21) as applicable, govern these operations.

This SAC relies upon the equipment to stop transfers, disconnects, waste tank level instrumentation, SEHT level instrumentation, and transfer isolation valves. This equipment is described in more detail in Sections 2.4.3.3, 2.4.1.3, 2.4.6, 2.8.2.5, 4.3, and 4.4.

Sample analysis shall account for laboratory analysis uncertainty when used for Isopar® L characterization of strip effluent. Laboratory QA practices and sample analysis protocols, as described in Section 5.5.4.2.7, ensure the validity of associated sample results. The volume of each strip effluent transfer to DWPF shall be determined using appropriate instrument uncertainties.

5.7.2.1.4 SAC Evaluation

Independent verification that transfer pumps have stopped and verification of cessation of the transfer by independent means (e.g., monitoring supply tank level) are performed to ensure that the safety function is met. Calculations require independent verification and are performed in accordance with established procedures. The permitted transfer volume communicated to CSTF from DWPF shall be independently verified by CSTF to ensure the value is properly communicated.

The functionality of the waste tank reel tape and radar is assured by the NMMP as described in Section 5.5.4.2.9. SEHT level instrumentation is IPI equipment as described in Section 5.5.4.2.7.

5.7.2.2 Interface With Saltstone Facility (Specific Administrative Control 5.8.2.47)

5.7.2.2.1 Safety Function

The safety function of this SAC is to ensure that transfers from the CSTF to the Saltstone Facility are controlled and monitored to protect inventory input and MAR assumptions to ensure that waste received by the Saltstone Facility does not result in unacceptable exposure to offsite and onsite personnel.

5.7.2.2.2 SAC Description

The following requirements are not part of the SAC unless specifically noted.

In addition to meeting the WAC requirements for the Saltstone Facility (also see requirements of Section 5.5.4.2.15), the following controls shall be implemented for transfers to the Saltstone Facility to preclude potential accident scenarios in the Saltstone Facility:

- Monitoring and material balance requirements to detect transfer events shall be determined. The frequency and method (e.g., level/leak monitoring) of monitoring and material balances for a transfer and the required monitoring locations (including those past the first isolation point) shall be determined on an individual basis.
- Siphon evaluations shall be performed. This evaluation will identify the potential for siphons and identify methods and equipment needed to stop siphons.

- Prior to transfer initiation, independent verification of correct transfer alignment shall be completed. After initiating the transfer, use of correct motive force shall be independently verified.
- Prior to transfer initiation, procedures shall identify (including staging requirements) the functional equipment needed to stop transfers and siphons. This requirement is a SAC.

  Stopping an unintended siphon shall be completed as soon as practical based on plant conditions through the use of the appropriate transfer procedure (typically accomplished by closing appropriate waste transfer valves). Once the siphon has been stopped, the need for a rapid response is no longer required and breaking the siphon is not time dependent.
- Isolate the transfer route when transfers to the Saltstone Facility are terminated. This requirement is a SAC.
- Material balance discrepancies shall be less than or equal to 15,000 gallons. If material balance discrepancies are greater than 15,000 gallons, then the affected transfers shall be terminated immediately. This requirement is a SAC.

  Re-zeroing of material balances may be completed prior to reaching the applicable transfer procedure shutdown criteria and shall include a documented technical basis. The primary means of re-zeroing shall be accomplished by verifying no indications of a leak in the leak detection equipment. Video inspection of the interior of the sending and receipt tanks for the presence of salt mounds may be utilized and if salt mounds exist, the material balance may be re-zeroed.
- Procedures shall specify communication protocol during transfers.
- Ensure during a tornado watch/tornado warning/high wind warning, following a tornado/high wind event, or following an earthquake, transfers are terminated and a siphon break established. This requirement is a SAC.

Additionally, to ensure the Saltstone Facility DSA limit on tetraphenylborate is not exceeded, further additions of tetraphenylborate to Tank 50 are prohibited. This prohibited activity is already imposed by requirements stated in Chapter 18 (SAC attributes are also discussed in Chapter 18) and implemented through TSR Administrative Control 5.8.2.49. This requirement is a SAC.

The indicated controls were designated as SACs due to the variety of requirements, which cannot be performed by an SSC.

CSTF equipment relied upon to implement this SAC (with corresponding DSA description section), dependent upon the particular control, includes the following:

- Transfer line isolation valves (Section 2.4.4)
- Transfer device breakers/disconnects (Section 2.4.4)
- Transfer lines (Section 2.4.4)

- Equipment to stop transfers and siphons
- Waste tank level measurement devices (Section 2.4.1.3)
- Secondary containment conductivity probes and dip tubes (Section 2.4.4)
- Inspection cameras

Saltstone Facility equipment relied upon to implement this SAC is described in the Saltstone Facility DSA (Ref. 35).

5.7.2.2.3 Functional Requirements

The following assures functionality of CSTF equipment used for this SAC (excludes equipment covered by Chapter 4 or the TSR):

- Waste tank reel tapes and radar - NMMP (Section 5.5.4.2.9)
- Secondary containment dip tubes - NMMP (Section 5.5.4.2.9)

5.7.2.2.4 SAC Evaluation

The actions of this SAC are considered to be routine tasks using existing procedures. Stopping an unintended siphon shall be completed as soon as practical based on plant conditions through the use of the appropriate transfer procedure. Once the siphon has been stopped the need for a rapid response is no longer required, thus the breaking of the siphon is not time dependent.

Independent verification is required when isolating the transfer route to the Saltstone Facility when transfers are terminated. Second person verification is required when terminating transfers to the Saltstone Facility and establishing a siphon break during or following an NPH event. Controls and monitoring performed by the Transfer Control Program (Section 5.5.4.2.21) ensure that the safety function of this SAC is met.

5.7.2.3 Interface With Effluent Treatment Project

Transfers of waste from the CSTF to ETP are limited to wastewater that is contaminated with small quantities of radionuclides and process chemicals. An inadvertent transfer of supernate to ETP through the Tank 50 VB and the subsequent accumulation of fissile material in the ETP systems present a potential criticality safety concern. This potential criticality safety concern was evaluated and determined to be incredible due to the multiple barriers that are in place to prevent inadvertent Waste Transfers to ETP through the Tank 50 VB. The barriers that ensure criticality is incredible in the ETP are listed in Table 6.3-1 (Ref. 37).

5.8 REFERENCES

1. Nuclear Safety Management, Title 10 Energy, Code of Federal Regulations. Part 830, U.S. Department of Energy, Washington, DC, January 2001.

2. Preparation Guide for U.S. Department of Energy Nonreactor Nuclear Facility Documented Safety Analyses. DOE-STD-3009-94, Change Notice No. 3, U.S. Department of Energy, Washington, DC, March 2006.

3. Anderson, C.E. to Piccolo, S.F. Safety Strategy for Preparation of the Consolidated Concentration, Storage, and Transfer Facility (CSTF) Safety Basis Documentation to Meet 10 CFR 830. PC-02-012, Westinghouse Savannah River Company, Aiken, SC, December 21, 2001.

4. Concentration, Storage, and Transfer Facilities Technical Safety Requirements. S-TSR-G-00001.

5. Deleted

6. Implementation Guide for use in Developing Technical Safety Requirements. DOE G 423.1-1A, U.S. Department of Energy, Washington, DC, November 2010.

7. Deleted

8. Functional Classification Methodology Manual (U). WSRC-TM-93-9, Rev. 5, November 2004.

9. Ledbetter, J. Input Data and Assumptions for the Concentration, Storage, and Transfer Facilities (U). S-CLC-G-00235, Rev. 7, July 2011.

10. Yeung, M.R. Transfer Errors, Overflows, Spills, Breaks, Leaks, and Siphons in the CST Facilities. S-CLC-G-00236, Rev. 1, July 2014.

11. Hester, J.R. to Little, D.B. Reliability of Tank 32H Source Term Projections Based on WCS. HLW-STE-2002-00197, Westinghouse Savannah River Company, Aiken, SC, June 18, 2002.

12. d'Entremont, P.D., Jeffrey, J.K., Hester, J.R., and Hill, P.J. Lower Source Terms for F Area Tanks. WSRC-TR-2002-00260, Rev. 1, July 2002.

13. Hester, J.R. Bounding Supernate Source Term. U-CLC-G-00002, Rev. 0, October 2002.

14. Chow, S. Explosion in a Transfer Facility or Evaporator Cell (CST SAR DBA Analysis) (U). S-CLC-G-00209, Rev. 2, July 2004.

15. Schwenker, J.P., Piccolo, S.F. to Brosee, M.N., Wilson, J.W. Affect of Level Instrumentation on Recovery Times (U). OPS-DTP-970055, Westinghouse Savannah River Company, Aiken, SC, April 2, 1997.

16. Deleted

17. Layton, M. Vapor Space Turnovers (U). S-CLC-G-00283, Rev. 0, June 2002.

18. Chow, S. to Schwenker, J.P. Dissolved Hydrogen Removal in H-Canyon and F-Canyon (U). WSMS-SAE-M-02-0122, Westinghouse Safety Management Solutions, Aiken, SC, June 25, 2002.

19. In-Service Testing of Nuclear Air Treatment, Heating, Ventilating, and Air-Conditioning Systems. ASME N511-2007, American Society of Mechanical Engineers, New York, NY, February 2008.

20. Design, Inspection, and Testing Criteria for Air Filtration and Adsorption Units of Post-Accident Engineered-Safety-Feature Atmosphere Cleanup Systems in Light-Water-Cooled Nuclear Power Plants. Regulatory Guide 1.52, Rev. 4, Office of Nuclear Regulatory Research, USNRC, Washington, DC, September 2012.

21. Salyer, W.D. to Schwenker, J.P. Impact of Submerged Discharge on Aerosolization and Consequences of Pulse Tube Agitator Air Jet Accident. WSMS-SAE-M-02-0111, Westinghouse Safety Management Solutions, Aiken, SC, May 29, 2002.

22. Radiological Control Manual. Procedure Manual 5Q.

23. Occupational Radiation Protection, Title 10 Energy, Code of Federal Regulations. Part 835, U.S. Department of Energy, Washington, DC, January 2005.

24. Morton, G. Waste Tank Explosion (CST SAR DBA Analysis) (U). S-CLC-G-00258, Rev. 1, June 2004.

25. Cope, C.D. Purge Flow Requirements for Slow Generation Tanks (U). S-CLC-G-00288, Rev. 0, June 2002.

26. Deleted

27. Deleted

28. Savannah River Site Requirements for Diesel Fuel Quality. SRS Engineering Practices Manual, WSRC-IM-95-58, Guide No. 15591-G, Rev. 5, June 2016.

29. Jeffrey, J.K. Requirements to Prevent Exceeding the CST 830 DSA Bounding Sludge Slurry Source Term in H-Area Waste Tanks. X-CLC-H-00305, Rev. 0, October 2002.

30. Wilmarth, W.R. to Lewis, B. Technical Requirements for Dispositioning Tank 40H Decants. SRT-LWP-2001-00032, Westinghouse Savannah River Company, Aiken, SC, March 20, 2001.

31. Bumgardner, D.C. Interim Criteria for Feeding Tank 5 to the 2F Evaporator. HLW-STE-2001-00343, Westinghouse Savannah River Company, Aiken, SC, July 17, 2001.

32. Deleted

33. Minimum Staffing Requirements for the Concentration, Storage and Transfer Facilities (CSTF). U-ESR-H-00079, Rev. 8, February 2016.

34. Final Safety Analysis Report - DWPF. WSRC-SA-6.

35. Saltstone Facility Documented Safety Analysis. WSRC-SA-2003-00001.

36. Auditable Safety Analysis for the Effluent Treatment Facility. WSRC-TR-98-00379.

37. Barnett, M.H. Nuclear Criticality Safety Evaluation: Tank 50 Valve Box Transfers (U). N-NCS-H-00132, Rev. 3, June 2013.

38. Britt, T.E. Resolution of the Organic PISA. WSRC-TR-2002-00094, Rev. 3, March 2003.

39. Yeung, M.R. Waste Tank Annulus Deflagration/Explosion Analysis (U). S-CLC-G-00249, Rev. 1, June 2004.

40. Jeffrey, J.K. Requirements to Prevent Exceeding the CST 830 DSA Slurried Type IV Tank Source Term. X-CLC-G-00025, Rev. 0, October 2002.

41. Shanmuganathan, N. Tank 30 Chromate Cooling Water (CCW) Line: Vacuum Vent Size. M-CLC-H-02411, Rev. 0, November 2002.

42. Allison, J.M. to Pedde, R.A. Concentration, Storage, and Transfer Facilities (CSTF) Safety Evaluation Report (SER) for the 10CFR830 Compliant Documented Safety Analysis (DSA) and Technical Safety Requirements (TSR's). PC-03-008, Westinghouse Savannah River Company, Aiken, SC, December 20, 2002.

43. Mullaney, J.M. to Schwenker, J.P. Comparison of Cell Explosions Between HDB-7 and 242-16F/16H. WSMS-LIC-M-03-0017, Washington Safety Management Solutions, Aiken, SC, May 5, 2003.

44. Fauerby, D. to Shah, M. Method to Use LFL Monitor to Verify Measured LFL Less Than Specific Value. WSMS-SAE-03-0123, Rev. 1, URS Safety Management Solutions, Aiken, SC, May 20, 2011.

45. Deleted

46. High Level Waste Emergency Response Data and Waste Tank Data. N-ESR-G-00001.

47. Deleted

48. Savannah River Site Emergency Plan. SCD-7.

49. Quality Assurance Manual. Procedure Manual 1Q.

50. Suttinger, L.T. Assessment of Safety Class Alarm Loops for the H-Tank Farm Control Room Consolidation Project. J-CLC-H-00865, Rev. 0, November 2005.

51. Campbell, T.C. Assessment of Safety Significant Alarm Loops for the H-Tank Farm Control Room Consolidation Project. J-CLC-H-00868, Rev. 1, May 2013.

52. Specific Administrative Controls. DOE-STD-1186-2004, U.S. Department of Energy, Washington, DC, August 2004.

53. Deleted

54. Conduct of Engineering. Procedure Manual E7.

55. SRS HEPA Filter Program. Procedure Manual 2Y.

56. Deleted

57. Kantz, M.J., Matthews, W.M. to Little, D.B. CSTF DSA/TSR Specific Administrative Controls Evaluation. WSMS-LIC-M-06-0001, Rev. 1, Washington Safety Management Solutions, Aiken, SC, June 22, 2006.

58. Deleted

59. Standard for Emergency and Standby Power Systems. NFPA 110, National Fire Protection Association, Quincy, MA, 2016 Edition.

60. Standard Practice for Manual Sampling of Petroleum and Petroleum Products. ASTM D4057-12, December 2012.

61. Standard Specification for Diesel Fuel Oils. ASTM D975-15c, October 2015.

62. DOE Handbook - Nuclear Air Cleaning Handbook. DOE-HDBK-1169-2003, U.S. Department of Energy, Washington, DC, November 2003.

63. Deleted

64. Deleted

65. Vail, R.E. Human Reliability Analysis of CSTF Maximum Missing Waste Specific Administrative Control. S-CLC-H-01077, Rev. 2, December 2012.

66. Oakley, R.A. Explosion in a Transfer Line (CST SAR DBA Analysis) (U). S-CLC-G-00234, Rev. 0, May 2002.

67. Savannah River Site Generic Data Base Development (U). WSRC-TR-93-262, May 1998.

68. Cardwell, D.F. Purge Exhaust Vent Flow. M-CLC-G-00360, Rev. 2, March 2017.

69. Britt, T.E. Impact of CSSX Organic Carry-Over on Tank Farm Operation. X-CLC-H-00581, Rev. 3, December 2007.

70. Yeager, T.L. Consolidated Hazard Analyses for the Concentration, Storage, and Transfer Facilities. WSRC-TR-2006-00404, Rev. 16, May 2015.

71. Flora, E.M. and Allison, D.K. Type I and Type II Waste Tanks Purge Flow Parametric Analysis for Chemical Cleaning (U). S-CLC-G-00329, Rev. 2, June 2012.

72. Stuart, I.M. Type I/II Tank Annulus Flammability Analysis for Chemical Cleaning (U). S-CLC-G-00330, Rev. 2, June 2012.

73. Deleted

74. Vitali, J.R. Evaluations of Inhalation Dose Potential when Separation Distance between the Jet/Pump and Sludge is Less Than 24 Inches. X-CLC-G-00090, Rev. 0, August 2008.

75. Britt, T.E. Impact of Interim MCU Operation on Tank 50H and Saltstone. X-ESR-H-00146, Rev. 1, June 2011.

76. Monaco, P.H. SAC 5.8.2.50 Ventilation System Performance Monitoring. U-ESR-H-00072, Rev. 0, February 2009.

77. Over Pressurization – F & H Area Waste Transfer System. M-CLC-G-00263, Rev. 6, July 2010.

78. Deleted

79. Liquid Waste Process Control (LWPC) Software Quality Assurance Plan. B-SQP-G-00040, Rev. 1, February 2008.

80. HLW (Tank Farm) Backfit Assessment Package Fiber Optic Alarm Cable. G-BFA-H-00020, Rev. 0, February 2005.

81. Campbell, T.C. Assessment of Safety Significant Alarm Loops for the F-Tank Farm Control Room Consolidation Project. S-CLC-F-00678, Rev. 0, December 2012.

82. Campbell, T.C. Assessment of Safety Class Alarm Loops for the F-Tank Farm Control Room Consolidation Project. J-CLC-F-00443, Rev. 0, December 2012.

83. Britt, T.E. Flammability Potential of Next Generation Solvent in the Tank Farm and Saltstone. X-ESR-H-00453, Rev. 0, December 2012.

84. Designation of Hazardous Substances. Title 40 Protection of Environment, Code of Federal Regulations. Part 302.4, U.S. Environmental Protection Agency, Washington, DC.

85. Emergency Planning and Notification. Title 40 Protection of Environment, Code of Federal Regulations. Part 355, U.S. Environmental Protection Agency, Washington, DC.

86. Process Safety Management of Highly Hazardous Chemicals. Title 29 Labor, Code of Federal Regulations. Part 1910.119, U.S. Department of Labor, Washington, DC.

87. Chemical Accident Prevention Provisions. Title 40 Protection of Environment, Code of Federal Regulations. Part 68, U.S. Environmental Protection Agency, Washington, DC.

88. Deleted

89. Collins, P.S. 254-13H Diesel Fuel Tank Level Measurement. M-CLC-H-03286, Rev. 0, November 2014.

90. Faugl, T. Determination of Generic Inhalation Dose Potential Uncertainty (2-Sigma). U-CLC-G-00035, Rev. 1, June 2015.

91. Boley, C.S. and Hester, J.R. Hydrogen Generation Rates for Tank Farm Applications. WSRC-TR-98-00303, Rev. 0, December 1998.

92. Hester, J.R. Radiolytic Bubble Gas Hydrogen Compositions. WSRC-TR-2001-00193, Rev. 1, November 2002.

93. Thoman, D.C., et al. Flammability Analysis for CST Waste Tanks during Free Supernate Removal. U-CLC-G-00036, Rev. 0, February 2016.

94. Allison, D.K. CSTF Pump Tank Time to LFL and Purge Requirements (U). U-CLC-G-00038, Rev. 1, June 2016.

95. Faugl, T.A. Settling Time Requirement for Trapped Gas Release Control Selection. U-ESR-H-00133, Rev. 1, February 2016.

96. Chow, S. Dissolved Hydrogen Removal in H-Canyon and F-Canyon (U). WSMS-SAE-M-02-0122, Rev. 0, Westinghouse Safety Management Solutions, Aiken, SC, June 2002.

97. NFPA 69, Standard on Explosion Prevention Systems. National Fire Protection Association, Quincy, MA, 2014 Edition.

98. Webb, M.N. Residual Waste Heights in Annuli of Type III/IIIA Waste Tanks (U). S-CLC-G-00273, Rev. 1, June 2004.

99. Mullaney, J.M. Impact of Residual Waste in Annuli of Type I/II Waste Tanks (U). S-CLC-G-00274, Rev. 0, April 2002.

5.9 TABLES

Table 5.9-1 Summary of Technical Safety Requirements

PROCESS AREA:	EVAPORATORS		
SSCs / ACs	**Functional Classification [a]**	**Analysis Section(s)**	**Operational Limits TSR**
242-16H/242-25H Evaporator Mercury Monitoring	SS	3.4.2.21 Table 3.3-13 4.4.47	LCO 3.6.1
Secondary Containment Waste Control (242-16H Evaporator Cell sump level)	SS	3.4.1.5.6 3.4.2.2 Table 3.4-4	LCO 3.7.12
Design Feature - 242-16H Evaporator Cell	SC	3.4.2.2 3.4.2.3 3.4.2.6 3.4.2.17 (SC) 3.4.2.19 Table 3.3-13 Table 3.3-14 4.3.16	TSR Section 6.0
Design Feature - 242-25H Evaporator Cell	SC	3.4.2.6 3.4.2.17 (SC) 3.4.2.19 Table 3.3-13 Table 3.3-14 4.3.16	TSR Section 6.0
Design Feature - 242-16H Evaporator Tube Bundle Steam Pressure Control Valve and Tube Bundle Pressure Relief Valve	SS	3.4.2.4 3.4.2.18 Table 3.3-13 4.4.38	TSR Section 6.0 AC 5.8.2.9
Design Feature - 242-25H Evaporator Lance Steam Pressure Control Valve and Lance Steam Pressure Relief Valve	SS	3.4.2.4 3.4.2.18 Table 3.3-13 4.4.39	TSR Section 6.0 AC 5.8.2.9

Table 5.9-1 Summary of Technical Safety Requirements (continued)

PROCESS AREA:	EVAPORATORS		
SSCs / ACs	**Functional Classification [a]**	**Analysis Section(s)**	**Operational Limits TSR**
Design Feature - 242-16H/242-25H Evaporator Lance Air Supply Line Orifices	SS	3.4.2.4 3.4.2.18 Table 3.3-13 4.4.36	TSR Section 6.0 AC 5.8.2.9
Design Feature - 242-16H/242-25H Evaporator Lance Steam Supply Line Orifices	SS	3.4.2.4 3.4.2.18 Table 3.3-13 4.4.37	TSR Section 6.0 AC 5.8.2.9
Design Feature - 242-16H/242-25H Evaporator Tube Bundles	SS	3.4.2.4 3.4.2.18 Table 3.3-13 4.4.35	TSR Section 6.0
Design Feature - Transfer Line Core Pipe (including jumpers, and connectors)	SS	3.4.2.3 Table 3.3-13 4.3.1 4.3.2	TSR Section 6.0
Administrative Control - Oil Control Program	SC	3.4.1.5.6 3.4.2.1 3.4.2.2 3.4.2.18 (SC) Table 3.3-13	AC 5.8.2.45
Administrative Control - Evaporator Feed Qualification Program	SC	3.4.1.5.6 3.4.2.1 3.4.2.2 3.4.2.3 3.4.2.4 3.4.2.17 (SC) 3.4.2.18 (SC) 3.4.2.19 (SC)	AC 5.8.2.25
Administrative Control - Event Response Program	SC	3.4.2.18 3.4.2.19 Table 3.3-13	AC 5.8.2.39

Table 5.9-1 Summary of Technical Safety Requirements (continued)

PROCESS AREA:	EVAPORATORS		
SSCs / ACs	**Functional Classification [a]**	**Analysis Section(s)**	**Operational Limits TSR**
Administrative Control - HEPA Filter Program	SC	3.4.1.5.6 3.4.2.1 3.4.2.17 (SC) 3.4.2.18 (SC) 3.4.2.19 (SC)	AC 5.8.2.18
Administrative Control - Severe Weather Response Program	SC	3.4.2.17 Table 3.3-13 4.3.18	AC 5.8.2.24
Administrative Control - 242-16H Evaporator Scale Evaluation	SC	3.4.1.5.6 3.4.2.1 3.4.2.17 (SC) 3.4.2.18 (SC) 3.4.2.19 (SC)	AC 5.8.2.26
Administrative Control - Emergency Response Program	SS	3.4.2.2 3.4.2.4 3.4.2.17 3.4.2.18 3.4.2.19 Table 3.3-13	AC 5.8.2.2
Administrative Control - Hydrogen Generation Rate Control	SC	3.4.1.5.6 3.4.2.17	AC 5.8.2.31
Administrative Control - Connector Installation Program	SS	3.4.1.5.6 3.4.2.3 Table 3.3-13	AC 5.8.2.16
Administrative Control - Transfer Control Program	SS	3.4.1.5.6 3.4.2.3 Table 3.3-13	AC 5.8.2.21
Administrative Control – Mercury Management Program	SS	3.4.2.21 Table 3.3-13	AC 5.8.2.54

Notes:

(a) Although Administrative Programs are not functionally classified, they are denoted as SC or SS according to the highest classification of the function they perform for the specific event. SC/SS is only denoted when classification varies depending upon process area (e.g., SC for Type III waste tanks, SS for Type IV waste tanks).

Table 5.9-1 Summary of Technical Safety Requirements (continued)

PROCESS AREA:	WASTE TANKS		
SSCs / ACs	**Functional Classification [a]**	**Analysis Section(s)**	**Operational Limits TSR**
Waste Tank Level	SC SS (Type IV) SS (Tank 50)	3.4.2.9 3.4.2.10 (SC) 3.4.2.11 (SC) 3.4.2.12 (SC) 3.4.2.13 3.4.2.14 (SC) 3.4.2.15 3.4.2.17 (SC) 3.4.2.18 (SC) 3.4.2.19 (SC) 3.4.2.20 (SC) Table 3.3-15 4.3.11 4.4.31	LCO 3.8.4 LCO 3.8.17
Waste Tank Purge Ventilation System (including interlocks)	SC SS (Type IV) SS (Tank 50)	3.4.2.10 3.4.2.11 (SC) 3.4.2.13 3.4.2.18 (SC) Table 3.3-15 4.3.12 4.3.13 4.4.25	LCO 3.8.1 LCO 3.8.9 LCO 3.8.15
Waste Tank Temperature Monitoring	SC	3.4.2.11 3.4.2.17 3.4.2.18 3.4.2.19	LCO 3.8.19
Acidic Spray Washing Controls	SC	3.4.2.11	LCO 3.8.17
CRW Siphon Breakers	SC (Tanks 13, 14, 15, 29, 30, 31, 32, and 35) SS (Tanks 33 and 34)	3.4.2.15 3.4.2.18 Table 3.3-15 4.3.17	LCO 3.8.7

Table 5.9-1 Summary of Technical Safety Requirements (continued)

PROCESS AREA:	WASTE TANKS		
SSCs / ACs	**Functional Classification [a]**	**Analysis Section(s)**	**Operational Limits TSR**
Secondary Containment Waste Control (Waste Tank Annulus Level/Ventilation) * Annulus conductivity probes are required for SR for annulus level and are classified as SS	*SS	3.4.1.5.6 3.4.2.12 Table 3.3-15 Table 3.4-3 4.4.28*	LCO 3.8.5
Type I/II Waste Tank Annulus Leak Detection	SS	3.4.2.12 3.4.2.17 3.4.2.18 3.4.2.19 3.4.2.20 Table 3.3-15 4.4.28	LCO 3.8.18
Type III/IIIA Waste Tank Annulus Leak Detection	SS	3.4.2.9 Table 3.3-15 4.4.28	LCO 3.8.6
Type I/II Waste Tank Annulus Ventilation	SS	3.4.2.12 3.4.2.14 Table 3.3-15 4.4.27	LCO 3.8.18
Waste Tank Hydrogen Monitoring (including interlocks)	SS	3.4.2.11 3.4.2.18 Table 3.3-15 4.4.32	LCO 3.8.2 LCO 3.8.3 LCO 3.8.10 LCO 3.8.16
Area Radiation Monitoring - Waste Storage Tanks	SS	3.4.2.9 3.4.2.10 3.4.2.11 Table 3.3-15 4.4.17	LCO 3.8.11 AC 5.8.2.41
SMP Riser Conductivity Probe and Conductivity Probe Interlocks	SS	3.4.2.9 3.4.2.18 Table 3.3-15 4.4.42	LCO 3.8.12

Table 5.9-1 Summary of Technical Safety Requirements (continued)

PROCESS AREA:	WASTE TANKS		
SSCs / ACs	**Functional Classification [a]**	**Analysis Section(s)**	**Operational Limits TSR**
Tank 50 Waste Temperature Monitoring	SS	3.4.2.11 Table 3.3-15 4.4.44	LCO 3.8.14
242-16H Evaporator Feed Pump Backflow Prevention Devices	SC	3.4.2.9 3.4.2.18 (SC) Table 3.3-15 4.3.18	LCO 3.7.13
Design Feature - Waste Tank Transfer Jets (including steam supply piping)	SC	3.4.2.10 (SC) 3.4.2.13 3.4.2.18 (SC) Table 3.3-15 4.3.15	TSR Section 6.0
Design Feature - Waste Tanks (Type I, II, III, and IIIA)	SC	3.4.2.10 3.4.2.11 3.4.2.12 (SC) 3.4.2.13 3.4.2.14 (SC) 3.4.2.17 3.4.2.18 (SC) 3.4.2.19 3.4.2.20 Table 3.3-15 4.3.10	TSR Section 6.0
Design Feature - SMP Column Pressure Boundary	SS	3.4.2.11 3.4.2.18 Table 3.3-15 4.4.40	TSR Section 6.0
Design Feature - SMP Flush/Motor Pressure Boundary	SS	3.4.2.9 3.4.2.11 3.4.2.18 Table 3.3-15 4.4.41	TSR Section 6.0

Table 5.9-1 Summary of Technical Safety Requirements (continued)

PROCESS AREA:	WASTE TANKS		
SSCs / ACs	**Functional Classification [a]**	**Analysis Section(s)**	**Operational Limits TSR**
Design Feature - SMP Electrical Breakers/Disconnects (equipment needed to secure power to SMPs)	SS	3.4.2.9 3.4.2.10 3.4.2.18 Table 3.3-15 4.4.43	TSR Section 6.0 AC 5.8.2.9
Design Feature - Type III and IIIA Waste Tank CRW Coils	SS	3.4.2.15 3.4.2.18 Table 3.3-15 4.4.19 4.4.23	TSR Section 6.0
Design Feature - Waste Tank Annulus	SS	3.4.2.9 3.4.2.10 3.4.2.12 3.4.2.13 3.4.2.14 3.4.2.17 3.4.2.18 3.4.2.19 3.4.2.20 Table 3.3-15 4.4.26	TSR Section 6.0
Design Feature - Waste Tank Annulus Transfer Jet (including steam supply piping)	SC	3.4.2.10 (SC) 3.4.2.13 3.4.2.18 (SC) Table 3.3-15 4.3.19	TSR Section 6.0
Design Feature / Administrative Control - Waste Tank Transfer Pump/Jet/SMP Riser (including Drains)	SS / SS	3.4.2.9 3.4.2.18 Table 3.3-15 4.4.29	TSR Section 6.0 AC 5.8.2.21

Table 5.9-1 Summary of Technical Safety Requirements (continued)

PROCESS AREA:	WASTE TANKS		
SSCs / ACs	**Functional Classification [a]**	**Analysis Section(s)**	**Operational Limits TSR**
Design Feature - Waste Tanks (Type IV)	SS	3.4.2.10 3.4.2.11 3.4.2.13 3.4.2.14 3.4.2.17 3.4.2.18 3.4.2.19 3.4.2.20 Table 3.3-15 4.4.24	TSR Section 6.0
Design Feature / Administrative Control - CRW Isolation Valves	SS / SS	3.4.2.15 3.4.2.18 Table 3.3-15 4.4.20 4.4.22	TSR Section 6.0 AC 5.8.2.9 AC 5.8.2.39
Design Feature / Administrative Control - Influent Manual Isolation Valves	SS / SS	3.4.2.9 4.4.18	TSR Section 6.0 AC 5.8.2.9
Administrative Control - Oil Control Program	SC SS (Type IV) SS (Tank 50)	3.4.1.5.6 3.4.2.11 3.4.2.12 3.4.2.18	AC 5.8.2.45
Administrative Control - ARM Location Program	SS	3.4.2.9 3.4.2.10 3.4.2.11 Table 3.3-15	AC 5.8.2.41
Administrative Control - Emergency Response Program	SS	3.4.2.11 3.4.2.17 3.4.2.18 3.4.2.19 3.4.2.20 Table 3.3-15	AC 5.8.2.2

Table 5.9-1 Summary of Technical Safety Requirements (continued)

PROCESS AREA:	WASTE TANKS		
SSCs / ACs	**Functional Classification [a]**	**Analysis Section(s)**	**Operational Limits TSR**
Administrative Control - Event Response Program	SC	3.4.2.11 (SC) 3.4.2.15 3.4.2.17 (SC) 3.4.2.18 (SC) 3.4.2.19 (SC) 3.4.2.20 (SC) Table 3.3-15	AC 5.8.2.39
Administrative Control - Flammability Control Program	SC SS (Type IV) SS (Tank 50)	3.4.2.11 3.4.2.17 3.4.2.18 3.4.2.19 3.4.2.20 Table 3.3-15	AC 5.8.2.27
Administrative Control - Gas Release Program	SC SS (Type IV) SS (Tank 50)	3.4.2.11 3.4.2.18 Table 3.3-15	AC 5.8.2.29
Administrative Control - Severe Weather Response Program	SC	3.4.2.17 Table 3.3-15 4.3.17	AC 5.8.2.24
Administrative Control - Waste Tank Mixing Device Operation	SS	3.4.2.9 3.4.2.10 3.4.2.18 Table 3.3-15	AC 5.8.2.35
Administrative Control - Transfer Control Program	SC SS (Type IV) SS (Tank 50)	3.4.1.5.6 3.4.2.9 3.4.2.10 (SC) 3.4.2.11 (SC) 3.4.2.12 3.4.2.13 3.4.2.18 (SC) Table 3.3-15	AC 5.8.2.21

Table 5.9-1 Summary of Technical Safety Requirements (continued)

PROCESS AREA:	WASTE TANKS		
SSCs / ACs	**Functional Classification [a]**	**Analysis Section(s)**	**Operational Limits TSR**
Administrative Control - Hydrogen Generation Rate Control	SC/SS SS (Type IV) SS (Tank 50)	3.4.1.5.6 3.4.2.11 (SC) 3.4.2.12 3.4.2.17 (SC) 3.4.2.18 (SC) 3.4.2.19 (SC) 3.4.2.20 (SC)	AC 5.8.2.31
Administrative Control - Waste Tank Chemical Cleaning Program	SC	3.4.2.11 3.4.2.17 3.4.2.18 3.4.2.19	AC 5.8.2.53
Administrative Control - Waste Tank Quiescent Time Program	SC SS (Type IV) SS (Tank 50)	3.4.2.11 3.4.2.18 Table 3.3-15	AC 5.8.2.28
Administrative Control - Flammable Vapor Sampling Program	SC	3.4.2.12 Table 3.3-15	AC 5.8.2.22
Administrative Control - Ventilation System Performance Monitoring	SS	3.4.2.9 3.4.2.10 3.4.2.13 3.4.2.14 Table 3.3-15	AC 5.8.2.50
Administrative Control - Tank Fill Limits Program	SC/SS SS (Type IV) SS (Tank 50)	3.4.2.9 3.4.2.10 (SC) 3.4.2.11 (SC) 3.4.2.12 (SC) 3.4.2.13 (SC) 3.4.2.14 (SC) 3.4.2.15 3.4.2.17 (SC) 3.4.2.18 (SC) 3.4.2.19 (SC) 3.4.2.20 (SC) Table 3.3-15	AC 5.8.2.44

Table 5.9-1 Summary of Technical Safety Requirements (continued)

PROCESS AREA:	WASTE TANKS		
SSCs / ACs	**Functional Classification [a]**	**Analysis Section(s)**	**Operational Limits TSR**
Administrative Control - 242-16H Evaporator Chemical Cleaning	SC	3.4.2.11 3.4.2.12 3.4.2.13 3.4.2.14 3.4.2.15 3.4.2.18 Table 3.3-15	AC 5.8.2.52

Notes:

(a) Although Administrative Programs are not functionally classified, they are denoted as SC or SS according to the highest classification of the function they perform for the specific event. SC/SS is only denoted when classification varies depending upon process area (e.g., SC for Type III waste tanks, SS for Type IV waste tanks).

Table 5.9-1 Summary of Technical Safety Requirements (continued)

PROCESS AREA:	PUMP TANK AND TRANSFER LINES (INCLUDING TRANSFER FACILITY COMPONENTS)		
SSCs / ACs	**Functional Classification [a]**	**Analysis Section(s)**	**Operational Limits TSR**
Pump Pit Conductivity Probe and Control Room Alarm Note - This LCO also fulfills the Secondary Containment Waste Control associated with PPs.	SS	3.4.1.5.6 3.4.2.7 3.4.2.8 3.4.2.9 Table 3.3-14 4.4.8	LCO 3.7.1
DB (including High Point Flush Pit) Conductivity Probe and Control Room Alarm	SS	3.4.2.7 3.4.2.9 Table 3.3-14 4.4.4	LCO 3.7.3 LCO 3.7.4
Pump Pit/Tank Ventilation System (active ventilation including HEPA) (excluding HDB-8 Complex)	SS	3.4.2.7 3.4.2.8 3.4.2.9 3.4.2.10 3.4.2.13 Table 3.3-14 4.4.9	LCO 3.7.5 AC 5.8.2.37
DB Ventilation System	SS	3.4.2.7 3.4.2.10 Table 3.3-14 4.4.5 4.4.9	LCO 3.7.5 LCO 3.7.7 AC 5.8.2.21
HDB-8 PVV System	SS	3.4.2.8 3.4.2.9 3.4.2.10 3.4.2.13 3.4.2.18 3.4.2.20 Table 3.3-14 4.4.10	LCO 3.7.6

Table 5.9-1 Summary of Technical Safety Requirements (continued)

PROCESS AREA:	PUMP TANK AND TRANSFER LINES (INCLUDING TRANSFER FACILITY COMPONENTS)		
SSCs / ACs	**Functional Classification [a]**	**Analysis Section(s)**	**Operational Limits TSR**
FPT-1 Pulse Tube Agitator Liquid Level Interlock	SS	3.4.2.10 Table 3.3-14 4.4.14	LCO 3.7.8
LDB/MLDB/LPS Conductivity Probe and Control Room Alarm	SS	3.4.2.7 3.4.2.9 Table 3.3-14 4.4.13	LCO 3.7.10
Area Radiation Monitoring - Above Ground Transfer Lines	SS	3.4.2.9 Table 3.3-14 4.4.17	LCO 3.7.9 AC 5.8.2.41
VB (including Drain VB) Conductivity Probe and Control Room Alarm	SS	3.4.2.7 3.4.2.9 Table 3.3-14 4.4.7	LCO 3.7.4
Waste Tank Temperature Monitoring	SC	3.4.2.7 3.4.2.8 3.4.2.17 3.4.2.18 3.4.2.19	LCO 3.8.19
Waste Tank Transfer Pump/Jet Riser Conductivity Probe and Control Room Alarm	SS	3.4.2.9 Table 3.3-15 4.4.30	LCO 3.7.10 AC 5.8.2.21
Secondary Containment Waste Control (VB, drain VB, High Point Flush Pit, DB sump, and LDB Drain Cell waste level)	SS	3.4.1.5.6 3.4.2.7 Table 3.3-14	LCO 3.7.2 LCO 3.7.11 LCO 3.7.14
HDB-8 DG	SS	3.4.2.8 3.4.2.18 3.4.2.20 Table 3.3-14 4.4.11	LCO 3.9.1

Table 5.9-1 Summary of Technical Safety Requirements (continued)

PROCESS AREA:	PUMP TANK AND TRANSFER LINES (INCLUDING TRANSFER FACILITY COMPONENTS)		
SSCs / ACs	**Functional Classification [a]**	**Analysis Section(s)**	**Operational Limits TSR**
Design Feature - DB Sump Steam Jet (including steam piping within DB)	SC	3.4.2.10 3.4.2.18 Table 3.3-14 4.3.5	TSR Section 6.0
Design Feature - DBs (including High Point Flush Pit)	SC	3.4.2.6 3.4.2.7 3.4.2.9 3.4.2.10 3.4.2.17 3.4.2.18 (SC) 3.4.2.19 Table 3.3-14 4.3.4	TSR Section 6.0
Design Feature - Pump Pits	SC	3.4.2.6 3.4.2.7 3.4.2.8 3.4.2.9 3.4.2.10 3.4.2.13 3.4.2.17 3.4.2.18 (SC) 3.4.2.19 3.4.2.20 Table 3.3-14 4.3.7	TSR Section 6.0
Design Feature - Pump Pit Sump Steam Jet (including steam supply piping)	SC	3.4.2.10 3.4.2.18 Table 3.3-14 4.3.8	TSR Section 6.0

Table 5.9-1 Summary of Technical Safety Requirements (continued)

PROCESS AREA:	**PUMP TANK AND TRANSFER LINES (INCLUDING TRANSFER FACILITY COMPONENTS)**		
SSCs / ACs	**Functional Classification [a]**	**Analysis Section(s)**	**Operational Limits TSR**
Design Feature - Pump Tank Passive Vent (non-HDB-8 Complex)	SS	3.4.2.8 3.4.2.17 3.4.2.18 3.4.2.19 3.4.2.20 Table 3.3-14 4.4.9	TSR Section 6.0
Design Feature - Pump Tanks	SC	3.4.2.8 3.4.2.9 3.4.2.10 3.4.2.13 3.4.2.18 (SC) 3.4.2.20 Table 3.3-14 4.3.9	TSR Section 6.0
Design Feature / Administrative Control - FPT-1 Pulse Tube Agitator Air Supply Pressure Relief Valve	SS / SS	3.4.2.10 Table 3.3-14 4.4.15	TSR Section 6.0 AC 5.8.2.9
Design Feature - Transfer Line Core Pipe (including jumpers, valves, and connectors) (Valves may also fulfill safety function of equipment needed to stop transfers, etc.)	SC	3.4.2.6 3.4.2.7 3.4.2.9 3.4.2.12 3.4.2.18 (SC) Table 3.3-14 Table 3.3-15 4.3.1 4.3.2 4.3.3	TSR Section 6.0 AC 5.8.2.9 (valves)

Table 5.9-1 Summary of Technical Safety Requirements (continued)

PROCESS AREA:	PUMP TANK AND TRANSFER LINES (INCLUDING TRANSFER FACILITY COMPONENTS)		
SSCs / ACs	**Functional Classification [a]**	**Analysis Section(s)**	**Operational Limits TSR**
Design Feature - VBs (including Drain VBs)	SC	3.4.2.6 3.4.2.7 3.4.2.9 3.4.2.17 3.4.2.18 (SC) 3.4.2.19 Table 3.3-14 4.3.6	TSR Section 6.0
Design Feature - H-Area Catch Tank and Catch Tank Encasement	SS	3.4.2.7 3.4.2.9 3.4.2.17 3.4.2.18 Table 3.3-14 4.4.33	TSR Section 6.0
Design Feature - HDB-4 Passive Vent	SS	3.4.2.10 Table 3.3-14 4.4.6	TSR Section 6.0
Design Feature - LDB Drain Cell	SS	3.4.2.7 3.4.2.9 3.4.2.17 3.4.2.18 Table 3.3-14 4.4.16	TSR Section 6.0
Design Feature - LDBs/MLDBs/LPSs/COPs	SS	3.4.2.6 3.4.2.7 3.4.2.9 Table 3.3-14 4.4.12	TSR Section 6.0

Table 5.9-1 Summary of Technical Safety Requirements (continued)

PROCESS AREA:	PUMP TANK AND TRANSFER LINES (INCLUDING TRANSFER FACILITY COMPONENTS)		
SSCs / ACs	**Functional Classification [a]**	**Analysis Section(s)**	**Operational Limits TSR**
Design Feature - Transfer Line Jackets/Encasements	SS	3.4.2.6 3.4.2.7 3.4.2.9 3.4.2.17 3.4.2.18 Table 3.3-14 4.4.3	TSR Section 6.0
Design Feature - Transfer Pump Electrical Breakers/Disconnects (Equipment needed to stop transfers)	SS	3.4.2.7 3.4.2.8 3.4.2.9 3.4.2.18 Table 3.3-13 Table 3.3-14 Table 3.3-15 4.4.1	TSR Section 6.0 AC 5.8.2.9
Design Feature / Administrative Control - Waste Tank (including Annulus) Transfer Jet Steam/Air Isolation Valves (Equipment needed to stop transfers)	SS / SS	3.4.2.7 3.4.2.8 3.4.2.9 3.4.2.18 Table 3.3-13 Table 3.3-14 Table 3.3-15 4.4.2	TSR Section 6.0 AC 5.8.2.9
Administrative Control - ARM Location Program	SS	3.4.2.9 Table 3.3-14	AC 5.8.2.41
Administrative Control - Oil Control Program	SC	3.4.1.5.6 3.4.2.7 3.4.2.8 3.4.2.18 (SC) Table 3.3-14	AC 5.8.2.45

Table 5.9-1 Summary of Technical Safety Requirements (continued)

PROCESS AREA:	PUMP TANK AND TRANSFER LINES (INCLUDING TRANSFER FACILITY COMPONENTS)		
SSCs / ACs	**Functional Classification [a]**	**Analysis Section(s)**	**Operational Limits TSR**
Administrative Control - Connector Installation Program	SC	3.4.1.5.6 3.4.2.6 3.4.2.7 3.4.2.8 3.4.2.9 3.4.2.10 3.4.2.18 (SC) Table 3.3-14	AC 5.8.2.16
Administrative Control - Emergency Response Program	SS	3.4.2.5 3.4.2.6 3.4.2.8 3.4.2.17 3.4.2.18 3.4.2.19	AC 5.8.2.2
Administrative Control - Event Response Program	SC	3.4.2.18 3.4.2.19 3.4.2.20 Table 3.3-14	AC 5.8.2.39
Administrative Control - Fire Protection Program	SC	3.4.2.5 Table 3.3-14	AC 5.8.2.6
Administrative Control - Pump Tank Backup Ventilation Systems Program	SS	3.4.2.8 3.4.2.18 Table 3.3-14	AC 5.8.2.37
Administrative Control - Pump Tank Transfer Jet Control Program	SC	3.4.2.10 (SC) 3.4.2.13 Table 3.3-14	AC 5.8.2.36
Administrative Control - Severe Weather Response Program	SC	3.4.2.17 Table 3.3-14 4.4.14	AC 5.8.2.24

Table 5.9-1 Summary of Technical Safety Requirements (continued)

PROCESS AREA:	PUMP TANK AND TRANSFER LINES (INCLUDING TRANSFER FACILITY COMPONENTS)		
SSCs / ACs	**Functional Classification [a]**	**Analysis Section(s)**	**Operational Limits TSR**
Administrative Control - Transfer Control Program	SC	3.4.1.5.6 3.4.2.5 3.4.2.6 3.4.2.7 3.4.2.9 3.4.2.10 (SC) 3.4.2.13 3.4.2.18 (SC) Table 3.3-14	AC 5.8.2.21
Administrative Control - Flammable Vapor Sampling Program	SS	3.4.2.6 Table 3.3-14	AC 5.8.2.22
Administrative Control - Transfers From Waste Tank Annuli Program	SS	3.4.2.10 3.4.2.13 Table 3.3-15	AC 5.8.2.23
Administrative Control - Ventilation System Performance Monitoring	SS	3.4.2.9 3.4.2.10 3.4.2.13 Table 3.3-14	AC 5.8.2.50
Administrative Control - Hydrogen Generation Rate Control	SC	3.4.1.5.6 3.4.2.7 3.4.2.8 3.4.2.17 3.4.2.18 (SC) 3.4.2.19 (SC) 3.4.2.20 (SC)	AC 5.8.2.31
Administrative Control – Waste Tank Chemical Cleaning Program	SC	3.4.2.7 3.4.2.8 3.4.2.17 3.4.2.18 3.4.2.19	AC 5.8.2.53

Notes:

(a) Although Administrative Programs are not functionally classified, they are denoted as SC or SS according to the highest classification of the function they perform for the specific event. SC/SS is only denoted when classification varies depending upon process area (e.g., SC for Type III waste tanks, SS for Type IV waste tanks).

Table 5.9-1 Summary of Technical Safety Requirements (continued)

PROCESS AREA:	MISCELLANEOUS		
SSCs / ACs	**Functional Classification [a]**	**Analysis Section(s)**	**Operational Limits TSR**
Administrative Control - 299-H Inventory Control Program	SC	3.4.2.16 3.4.2.19	AC 5.8.2.42

Notes:

(a) Although Administrative Programs are not functionally classified, they are denoted as SC or SS according to the highest classification of the function they perform for the specific event. SC/SS is only denoted when classification varies depending upon process area (e.g., SC for Type III waste tanks, SS for Type IV waste tanks.

CONCENTRATION, STORAGE, AND TRANSFER FACILITIES

DOCUMENTED SAFETY ANALYSIS

CHAPTER 6

PREVENTION OF INADVERTENT CRITICALITY

Revision 20
August 2017

DISCLAIMER

This document was prepared by AECOM N&E Technical Services, LLC (N&E TS) under contract with Savannah River Remediation, LLC (SRR), subject to the warranty and other obligations of that contract and in furtherance of SRR's contract with the United States Department of Energy (DOE). N&E TS' findings represent its reasonable judgments within the time and budget context of its commission and utilizing the information available to it at the time. This document was prepared solely for the DOE for Contract DE-AC09-09SR22505.

Release to and Use by Third Parties. As it pertains to releases of this document to third parties, and the use of or reference to this document by such third parties in whole or in part, neither N&E TS, SRR, DOE, nor their respective officers, directors, employees, agents, consultants or personal services contractors (i) make any warranty, expressed or implied, (ii) assume any legal liability or responsibility for the accuracy, completeness, or usefulness, of any information, apparatus, product or process disclosed herein or (iii) represent that use of the same will not infringe privately owned rights. Reference herein to any specific commercial product, process, or service by trademark, name, manufacture or otherwise, does not necessarily constitute or imply endorsement, recommendation, or favoring of the same by N&E TS, SRR, DOE or their respective officers, directors, employees, agents, consultants or personal services contractors. The views and opinions of the authors expressed herein do not necessarily state or reflect those of the United States Government or any agency thereof.

CONTENTS

Page

6.0 PREVENTION OF INADVERTENT CRITICALITY 6.1-1

6.1 INTRODUCTION 6.1-1

6.1.1 Applicability 6.1-1

6.1.2 Objectives 6.1-1

6.1.3 Scope 6.1-2

6.2 REQUIREMENTS 6.2-1

6.2.1 Applicable DOE Orders 6.2-1

6.2.2 Applicable Standards 6.2-1

6.3 CRITICALITY CONCERNS 6.3-1

6.3.1 Waste Storage 6.3-1

6.3.2 Sludge Mixing 6.3-2

6.3.3 Saltcake Dissolution 6.3-2

6.3.4 Waste Evaporation 6.3-3

6.3.5 Aluminum Dissolution 6.3-3

6.3.6 ARP/MCU 6.3-4

6.3.7 Chemical Heel Removal 6.3-4

6.4 CRITICALITY CONTROL PHILOSOPHY 6.4-1

6.4.1 Waste Storage/Sludge Mixing 6.4-1

6.4.2 Saltcake Dissolution 6.4-1

6.4.3 Waste Evaporation 6.4-2

6.4.4 ARP/MCU 6.4-3

6.4.5 Aluminum Dissolution 6.4-4

6.4.6 Chemical Heel Removal 6.4-4

6.5 CRITICALITY CONTROLS 6.5-1

6.5.1 Engineering Controls 6.5-1

6.5.2 Administrative Controls 6.5-1

6.5.3 Application of the Incredibility Argument 6.5-2

CONTENTS (continued)

Page

6.6 CRITICALITY SAFETY PROGRAM 6.6-1
6.6.1 Criticality Safety Organization 6.6-1
6.6.2 Criticality Safety Plans and Procedures 6.6-1
6.6.3 Criticality Safety Training 6.6-1
6.6.4 Determination of Operational Nuclear Criticality Limits 6.6-1
6.6.5 Criticality Safety Inspections/Audits 6.6-2
6.6.6 Criticality Infraction Reporting and Follow-Up 6.6-2
6.7 CRITICALITY INSTRUMENTATION 6.7-1
6.8 REFERENCES 6.8-1
6.9 TABLES 6.9-1

TABLES

Page

Table 6.3-1 Nuclear Criticality Safety Barriers for Tank 50 Valve Box Transfers 6.9-1

Table 6.4-1 Nuclear Criticality Safety Barriers for 242-16H Evaporator System 6.9-3

Table 6.4-2 Nuclear Criticality Safety Barriers for Aluminum Dissolution 6.9-7

Table 6.4-3 Nuclear Criticality Safety Barriers for ARP/MCU 6.9-8

Table 6.4-4 Nuclear Criticality Safety Barriers for MST in Tank 49 and Transfers of MST-Containing Materials Through HDB-7 ..... 6.9-9

Table 6.4-5 Nuclear Criticality Safety Barriers for Chemical Heel Removal in Tanks 4 & 8 ..... 6.9-10

Table 6.4-6 Nuclear Criticality Safety Barriers for Chemical Heel Removal in Tanks 9 through 15 ..... 6.9-11

Table 6.4-7 Nuclear Criticality Safety Barriers for Saltcake Dissolution in Tank 33 ..... 6.9-12

ACRONYMS AND ABBREVIATIONS

ANS	American Nuclear Society
ANSI	American National Standards Institute
ARP	Actinide Removal Process
CSC	Criticality Safety Committee
CSP	Criticality Safety Program
CST	Concentration, Storage, and Transfer
CSTF	Concentration, Storage, and Transfer Facilities
DB	Diversion Box
DOE	Department of Energy
DSA	Documented Safety Analysis
DSS	Decontaminated Salt Solution
DWPF	Defense Waste Processing Facility
EOI	Element of Incredibility
eq	equivalent
ETP	Effluent Treatment Project
FPT	F-Area Pump Tank
GPE	General Purpose Evaporator
HC	Hazard Category
HDB	H-Area Diversion Box
HEU	Highly Enriched Uranium
HLW	High Level Waste
HTF	H-Area Tank Farm
kg	kilogram
LWPT	Late Wash Precipitate Tank
MCU	Modular Caustic Side Solvent Extraction Unit
MP	Management Policy
MST	monosodium titanate

ACRONYMS AND ABBREVIATIONS (continued)

NAS	Sodium Aluminosilicate
NCS	Nuclear Criticality Safety
NCSA	Nuclear Criticality Safety Assessment
NCSASR	Nuclear Criticality Safety Analysis Summary Report
NCSE	Nuclear Criticality Safety Evaluation
OA	Oxalic Acid
PUREX	Plutonium-Uranium Extraction
S/RID	Standards/Requirements Identification Document
SRR	Savannah River Remediation LLC
SRS	Savannah River Site
SSC	Structure, System, and Component
TPB	tetraphenylborate
VB	Valve Box
wt. %	weight percent

6.0 PREVENTION OF INADVERTENT CRITICALITY

6.1 INTRODUCTION

Management Policy (MP) 4.5 of Manual 1-01 (Ref. 1) establishes the Nuclear Criticality Safety (NCS) Program for the Savannah River Site (SRS). MP 4.5 states that the site Criticality Safety Program (CSP) shall be applicable to any process, structure or system that requires the control of one or more parameters for Criticality Safety purposes. The SRS CSP is described in the Criticality Safety Program Description Document (Ref. 2). The SRS CSP implements the requirements of Department of Energy (DOE) Order 420.1C (Ref. 3) as described in SCD-3 (Ref. 4). Because the Concentration, Storage, and Transfer Facilities (CSTF) contain fissionable material, the SRS CSP is implemented for CSTF. The Savannah River Remediation (SRR) Criticality Safety Committee (CSC) Charter (Ref. 5) supplements the requirements of SCD-3 (Ref. 4).

6.1.1 APPLICABILITY

This Documented Safety Analysis (DSA) chapter describes the essential features of the CSTF NCS Program that fulfills DOE Order 420.1C, Chapter III (Ref. 3). SCD-3 (Ref. 4) delineates the requirements for criticality control and directs implementation to reduce the likelihood of a criticality.

The NCS Program is applicable to all CSTF classified as Hazard Category (HC) 2 or higher because inventories of fissionable materials may exist in sufficient quantities to present a criticality hazard. Those CSTF classified as HC 3 or below, by definition, do not contain sufficient fissile material to present a criticality hazard and are not subject to criticality safety controls per SCD-3 (Ref. 4).

6.1.2 OBJECTIVES

This chapter describes the NCS provisions for the CSTF. Only those elements of the program applicable to the CSTF are described herein.

The products of this chapter, as delineated in DOE-STD-3009-94 (Ref. 6), include:

- A summary of the CSTF-specific NCS policy and program
- A description of the general basis and analytical approach used for deriving operational criticality limits
- A summary of the design and administrative controls used by the CSTF NCS Program
- A description of the NCS Program elements and requirements for criticality control and their implementation

6.1.3 SCOPE

All facilities classified as HC 3 or higher are required to comply with DOE Order 420.1C (Ref. 3). HC 1 and 2 facilities can contain inventories of fissionable materials sufficient to present a criticality hazard, whereas HC 3 facilities, as specified in DOE-STD-3009-94 (Ref. 6) do not contain sufficient fissile material to present a criticality hazard. Thus, this chapter is not applicable to 299-H, which is a HC 3 facility. However, since Reference 7 summarizes the analysis of criticality hazards for both the Modular Caustic Side Solvent Extraction Unit (MCU) Facility (a HC 3 facility) and the 241-96H Actinide Removal Process (ARP) Facility, the MCU Facility is discussed in this chapter.

6.2 REQUIREMENTS

This section identifies the DOE Orders, standards, design codes, and regulations that are required for establishing the criticality safety basis of the CSTF. This section provides only the requirements specific to this chapter and pertinent to the safety analysis, not a comprehensive listing of all possible industrial standards, codes, and criteria.

The requirements of DOE Order 420.1C (Ref. 3) and the American National Standards Institute (ANSI) and American Nuclear Society (ANS) standards listed below are addressed in this chapter.

6.2.1 APPLICABLE DOE ORDERS

The following DOE Orders apply to the CSTF in the performance of criticality safety analysis relevant to a nonreactor nuclear facility; these DOE Orders are required for establishing the safety basis of the CSTF.

- DOE Order 420.1C (Ref. 3) provides the basic elements for an NCS program to ensure that criticality safety is comprehensively addressed and receives an objective review. The DOE Order requires that all identifiable risks be reduced to acceptably low levels and that management authorization of the operation shall be documented. This DOE Order mandates the use of several ANS Criticality Safety Standards and invokes the application of the basic elements and control parameters therein. The specific DOE Order and mandatory ANS Standards requirements are contained in the Standards/Requirements Identification Document (S/RID) (Ref. 8), Functional Area 18, Nuclear and Process Safety, as well as in the Nuclear Criticality Safety Manual, SCD-3 (Ref. 4). The S/RID (Ref. 8) serves as the controlling document for programmatic requirements.

6.2.2 APPLICABLE STANDARDS

The S/RID (e.g., S/RID Functional Area 18) (Ref. 8) covers the criticality program requirements, which includes DOE Order 420.1C (Ref. 3). As stated in the DOE Order, the basic elements and control parameters of programs for NCS shall satisfy the requirements of the following Standards:

- ANSI/ANS-8.1-2014 (Ref. 9) establishes the NCS practices and single/multiple parameter controls applicable to operations with fissionable materials outside reactors. These NCS practices are delineated in terms of administrative and technical controls.
- ANSI/ANS-8.15-2014 (Ref. 10) establishes NCS controls and provides the physical characteristics and criticality aspects for special actinide elements used in operations outside reactors.
- ANSI/ANS-8.19-2014 (Ref. 11) establishes administrative practices for NCS involving operations with fissionable materials outside reactors.

- ANSI/ANS-8.20-1991 (Ref. 12) establishes requirements for nuclear criticality safety training. It is implemented by DOE Order 426.2 as discussed in Section 12.4.
- ANSI/ANS-8.24-2007 (Ref. 13) establishes requirements and recommendations for validation of neutron transport calculational methods.
- ANSI/ANS-8.26-2007 (Ref. 14) establishes the fundamental content elements of a training and qualification program for individuals with responsibilities for performing the various technical aspects of criticality safety engineering.

The following Standards do not apply to the CSTF:

- ANSI/ANS-8.3-1997 does not apply since the ANSI/ANS-8.3-1997 scope states the standard is only applicable to operations where a criticality can occur and CST does not have any credible criticality scenarios.
- ANSI/ANS-8.5-1996 does not apply since the S/RID (Ref. 8) does not invoke it.
- ANSI/ANS-8.6-1983 does not apply since Subcritical Neutron Measurements are not conducted by CSTF.
- ANSI/ANS-8.7-1998 does not apply since the CSTF does not store arrays of fissionable material.
- ANSI/ANS-8.10-2015 does not apply since the CSTF does not have a credible criticality accident scenario and therefore does not credit shielding.
- ANSI/ANS-8.12-1987 does not apply since the CSTF does not handle, store, or transport plutonium-uranium oxide fuel mixtures.
- ANSI/ANS-8.14-2004 does not apply since soluble neutron poisons are not used by the CSTF for criticality control.
- ANSI/ANS-8.17-2004 does not apply since the CSTF does not handle, store, or transport light water reactor fuel.
- ANSI/ANS-8.21-1995 does not apply since the CSTF does not use fixed neutron absorbers.
- ANSI/ANS-8.22-1997 does not apply since the CSTF does not limit and control moderators.
- ANSI/ANS-8.23-1997 does not apply since the CSTF does not have a credible criticality accident scenario.

6.3 CRITICALITY CONCERNS

A complete description of the CSTF Structures, Systems, and Components is provided in Chapters 2 and 4. This section discusses the general processes in the CSTF, which may have the potential for criticality through the development of Nuclear Criticality Safety Evaluations (NCSEs) and Nuclear Criticality Safety Assessments (NCSAs). The Nuclear Criticality Safety Analysis Summary Report (NCSASR) (Ref. 7) summarizes the approved CSTF NCSEs/NCSAs and provides guidance for its revision for new/modified processes. The NCSASR captures all the nuclear criticality safety requirements from the NCSEs/NCSAs.

6.3.1 WASTE STORAGE

High Level Waste (HLW) has been generated due to uranium and plutonium recovery operations in F and H Canyons. The HLW is transferred from the canyons to the waste tanks through the transfer facilities.

In the waste tanks, or in the transfer facilities where waste may be allowed to accumulate in pump tanks, the stored waste may be in any of three basic forms: supernate, sludge solids (settled or slurried), or saltcake.

The nominal inventory of a waste tank consists of metric tons (thousands of kilograms [kg]) of process chemical compounds (e.g., $NaAlO_2$, $Fe(OH)_3$) and 20 to 40 kg of fissionable material (Ref. 15). Historically, the waste tank with the largest fissionable loading is Tank 39. For example, Tank 39 had an inventory of 166 kg of fissionable material in 1994. The largest fraction (84%) of this inventory was plutonium (140 kg) where 63% is considered fissile plutonium (88 kg). The remaining balance of the inventory was uranium (24 kg) with an enrichment of 49% and neptunium (2 kg) (Ref. 15). The individual waste tank fissile inventories may change over time as additional waste transfers are made into and within the CSTF (e.g., the Tank 39 fissile inventory has increased since 1994 due to additional waste transfers from the Canyons). Since the waste tank fissile inventories are subject to change, the precise fissile inventories for individual tanks are not captured in this chapter, but are detailed within the Waste Characterization System described in Chapter 5.

In the waste tanks, the relative solubility of the fissionable materials and neutron absorbers is low. Supernate (fresh, dilute, and concentrate) does not pose a criticality risk because the concentration of fissile material in the supernate is far below the subcritical concentration limit (Ref. 9).

Neutron absorbing materials, inherently present in the stored HLW sludge, make the sludge safely subcritical under all normal and credible abnormal operating conditions. The insoluble HLW sludge contains sufficient quantities of iron, manganese, and other neutron absorbing elements, so that criticality is not possible, even with an infinite amount of material (Ref. 16).

Tank 48 differs from other waste tanks in that it contains significant quantities of monosodium titanate (MST) and tetraphenylborate (TPB). MST was added to Tank 48 to remove strontium, uranium, and plutonium. MST and the adsorbed materials are not soluble in the caustic waste

solution and settle to the bottom of the tank, concentrating the fissile uranium and plutonium. The presence of MST and TPB in Tank 48 has been evaluated by an NCSA and does not pose a criticality concern as summarized in Reference 7.

Saltcake is the creation of the evaporation process. The insoluble residue in saltcake resembles the sludge components, and therefore does not pose a criticality concern due to the high concentration of neutron absorbing material and/or areal density. The soluble component of saltcake has been shown to be subcritical due to the limited solubility of the fissile material. Therefore, storage of saltcake does not pose a criticality concern as summarized in Reference 7. Based on a review of H-Area salt tank fissile inventories, the bounding enrichment assumed for fissile material in the H-Area salt tanks is 66% (Ref. 17). The F-Area waste tanks contain only Plutonium-Uranium Extraction (PUREX) waste, except for tanks formerly in the 242-16F Evaporator System (which have received transfers of material from H-Area waste tanks). Since the fissionable material in the PUREX waste is principally depleted uranium, the bounding enrichment for fissile material in the F-Area salt tanks is the H-Area value of 66%. Lower enrichment values may be justifiable using process-specific knowledge.

Tank 50 processes low-curie salt solutions to the Saltstone Facility. Since there is a potential transfer path from Tank 50 to the Effluent Treatment Project (ETP), there are several barriers, which ensure that criticality is incredible in the ETP. These barriers are listed in Table 6.3-1. These barriers are maintained by CSTF/ETP and prevent a fissile mass unit from being deposited into ETP as summarized in Reference 7.

Criticality concerns involving the Tank 50 solids have been resolved through an NCSE as summarized in Reference 7. The NCSE concluded that the Tank 50 solids are inherently subcritical, regardless of the enrichment of any feed to Tank 50.

6.3.2 SLUDGE MIXING

The waste removal process involves sludge solids dissolution and sludge re-suspension using chemically treated water or supernate. The mechanical re-suspension or dissolution of sludge solids does not separate the neutron poisons from the fissile materials. Therefore, the criticality safety of sludge solids dissolution and sludge re-suspension is bounded by the limiting safe neutron poison to fissile material ratios of the sludge solids as summarized in Reference 7.

6.3.3 SALTCAKE DISSOLUTION

The dissolving of the embedded insoluble uranium in the saltcake is not a reversible process. The potential scenario for criticality during saltcake dissolution is that fissile material compounds, which crystallized out of the supernate that became concentrated after evaporation, will not dissolve as rapidly as the bulk saltcake. When uranium precipitates from alkaline solutions, it cannot be re-dissolved at the same concentrations from which it precipitated.

Bulk saltcake dissolution and subsequent bulk agitation could create a potential criticality scenario if sufficient insoluble neutron poisons or single-parameter subcritical limits are not

maintained along with the fissile material. Reference 7 summarizes the NCSEs demonstrating bulk saltcake dissolution is subcritical.

Saltcake dissolution resulting from small incidental water additions (e.g., additions due to rainwater intrusion, washing reel tapes, flush water) are not considered as a "saltcake dissolution process" and consequently are not of concern for criticality safety. The limited volume of dissolved saltcake will contain only negligible fissionable material, which is not capable of supporting criticality.

6.3.4 WASTE EVAPORATION

The evaporators concentrate waste to provide greater waste storage capacity by evaporating excess water from the waste. Two potential criticality safety concerns with evaporator operation are fissile solids accumulation in the evaporator as a result of sludge carry-over in the feed and the formation of Sodium Aluminosilicate (NAS) scale on the evaporator surfaces. Fissile solids transported as part of sludge carry-over would also be accompanied by other solids in the sludge, and these solids would contain sufficient neutron poisons (e.g., iron) such that the sludge would be safely subcritical under all normal and credible abnormal operating conditions (as discussed in Section 6.3.1).

The introduction of high-silicon feed into the 242-16H Evaporator System has resulted in the formation and accumulation of NAS scale, which contains sodium diuranate, on the evaporator surfaces. The formation of significant quantities of this scale represents a potential criticality safety concern. The waste evaporation process is subcritical as described in the NCSE summarized in Reference 7.

6.3.5 ALUMINUM DISSOLUTION

The sludge waste stream from the 221-H facility H-Modified process contains large quantities of aluminum. Aluminum affects the viscosity of the glass in the Defense Waste Processing Facility (DWPF). To minimize the effects of aluminum intrusion on DWPF, aluminum dissolution processing may be necessary. Aluminum dissolution is a process by which aluminum solids are purposely driven into a soluble condition by major shifts in tank chemistry (addition of significant quantities of sodium hydroxide (NaOH)) and temperature accompanied by active mixing of the sludge in the tank. Normal caustic addition for tank chemistry control is not considered aluminum dissolution.

An aluminum dissolution process was completed in Tank 51. Batch additions of sodium hydroxide were added to the tank, the tank was mixed to promote the aluminum dissolution process and then allowed to settle. Once settled, the aluminum laden supernate was decanted to Tank 11.

As a consequence of the aluminum dissolution process, some uranium was also dissolved. The dissolution of the uranium does not pose a criticality risk in the waste tank because the continued presence of poisons will keep the sludge safely subcritical. The aluminum dissolution process is subcritical as described in the NCSE summarized in Reference 7.

6.3.6 ARP/MCU

The ARP/MCU Facilities are designed to process high-level waste salt solutions that contain soluble/insoluble radionuclides from chemical separations activities at SRS. These solutions are modified and the radionuclides segregated for acceptance into the DWPF and the Saltstone Facility. The ARP utilizes MST to remove strontium and some of the trace actinides in the salt solution. The MST, along with the sludge solids in the salt solution, is collected and sent to the DWPF. The MCU Facility receives alkaline salt solution filtrate from the ARP. The salt solution contains Cs-137 from the high-level waste feed, and traces of other radionuclides, including actinides such as uranium and plutonium. The MCU Facility uses a solvent extraction process to remove cesium from the salt solution. The concentrated cesium stream is sent to the DWPF to be mixed with the DWPF sludge in preparation for vitrification. The salt solution with reduced cesium is sent to Tank 50 for feed to the Saltstone Facility. The processing of material in ARP/MCU remains subcritical due to the low concentrations of uranium and plutonium and the low enrichment of the uranium.

6.3.7 CHEMICAL HEEL REMOVAL

Reference 7 summarizes the NCSEs involving the chemical cleaning of Tanks 4, 8, and 9 through 15 and the subsequent transfer of the acidic waste into Tanks 7, 13, and 51. However, Chapter 3 prohibits chemical cleaning in Tank 1. Therefore, Tank 1 will not be addressed in Chapter 6. Additionally, chemical cleaning of Tanks 2, 3, and 7 were not analyzed in Reference 7. Therefore, an NCSA/NCSE is required prior to chemical cleaning in Tanks 2, 3, and 7.

Criticality is not credible for the activities involving the chemical cleaning of Tanks 4, 8, and 9 through 15 and the subsequent transfer of the acidic waste into Tanks 7, 13, and 51 as described in the NCSEs summarized in Reference 7. This is due to the low concentration of fissile material in the sludge heel and the low fissile material areal density that would result in the event of precipitation. After chemical cleaning of the treatment Tanks 4, 8, and 9 through 15, a small amount of fissile/fissionable material, void of any criticality concern, will remain in these tanks. The waste in Tanks 7, 13, and 51 remains subcritical due to the low concentration of fissile material, large amount of neutron poisons, and the large cross section area of the tank.

6.4 CRITICALITY CONTROL PHILOSOPHY

6.4.1 WASTE STORAGE/SLUDGE MIXING

In the waste tanks, the relative solubility of the fissionable materials and neutron absorbers is low; therefore, the fissionable material along with process chemical compounds tends to settle to the bottom of the waste tank and form a sludge layer. The individual tank inventories of fissionable material are compiled from the historical 221-H and 221-F transfer records (i.e., accountability records).

Criticality safety in HLW receipt and storage tanks is provided by the process conditions of the 221-H and 221-F facilities. The concentrations of fissile material in the incoming waste are sufficiently dilute to prevent criticality in infinite geometry and under all anticipated conditions to which the waste will be subject during storage and processing. The process for preparing waste to send to the CSTF precipitates material with a much larger quantity of neutron absorbing material. The precipitate (sludge) contains sufficient hydrogen (in water), so that only the fissile material, not all fissionable material, is of concern for criticality safety in waste tanks that are maintained in a wet configuration (Ref. 10, 15, 18).

To ensure that the waste storage is maintained inherently safe, any incoming waste stream will be verified by the waste generator to be above the safe ratios of poison to fissile materials prior to transfer to CSTF as summarized in Reference 7.

Sludge mixing may also result in saltcake dissolution. This is acceptable as long as the saltcake dissolution is performed in accordance with Section 6.4.2. Additionally, the resultant slurry will be verified to contain sufficient poison to fissile material ratio to maintain subcriticality as summarized in Reference 7.

6.4.2 SALTCAKE DISSOLUTION

For waste tanks with significant fissile material inventory, bulk saltcake dissolution could create a potential criticality scenario if sufficient insoluble neutron poisons are not maintained along with the fissile material. This criticality concern is based on a difference in the dissolution rate of salt and insoluble fissile material (fissile salt/compound) formed during evaporation and deposited in the salt (drop) tank. The fissile salts/components formed in the evaporator during concentration have a very low dissolution rate (essentially insoluble) and could accumulate on the saltcake surface during the saltcake dissolution process. If sufficient insoluble neutron poisons are maintained in this layer, then subsequent waste tank activities (e.g., waste removal, waste transfers) cannot redistribute the insoluble fissile material without the corresponding insoluble neutron poisons.

Depending on the waste tank involved, different approaches have been utilized to document criticality safety during saltcake dissolution. The approaches vary primarily due to differing tank conditions and/or saltcake dissolution techniques. The criticality safety strategies currently approved for saltcake dissolution include:

A waste tank can be shown to not pose a criticality safety concern based on process knowledge of the salt fissile inventory as summarized in Reference 7. For example, an analysis of transfer histories can be used to show that a tank contains a limited inventory of low enrichment fissile material; such that no normal or credible abnormal upset conditions in the saltcake dissolution process would result in a criticality (this approach does not require process verification via sampling).

A waste tank can be shown to not pose a criticality safety concern based on the presence of neutron poisons during the bulk dissolution/bulk agitation process as summarized in Reference 7. The type of poison (e.g., iron, manganese) credited in the criticality evaluation may differ by waste tank. For tanks dependent on the presence of neutron poisons to ensure criticality safety, process verification sample(s) from the salt is/are needed prior to saltcake interstitial liquid removal and bulk saltcake dissolution to ensure the required insoluble neutron poison-to-fissile material ratio or other criticality safety parameters are satisfied. The purpose of the process verification sample(s) prior to saltcake interstitial liquid removal is: 1) to demonstrate that the contents of a tank will remain safely subcritical following a transfer error of 15,000 gallons into the remaining salt after the saltcake interstitial liquid has been removed and 2) support subsequent bulk saltcake dissolution criticality evaluation. Interstitial liquid itself is not a criticality concern as described in Section 6.4.1. Tank 38 operation is assessed in the 242-16H Evaporator NCSE as summarized in Reference 7. Saltcake removal activities in Tank 41 (saltcake interstitial liquid removal and saltcake dissolution), as summarized in Reference 7, were shown to be criticality safe. Saltcake dissolution in Tank 33 has been shown to be subcritical (Ref. 7). The criticality safety of the saltcake dissolution process in Tank 33 is based on historical process information, historical poison to fissile ratios in salt, Transfer Control Program controls in the TSR, and the nuclear criticality safety barriers listed in Table 6.4-7.

A waste tank can be shown to be subcritical using an areal density argument based on process knowledge of the tank contents to demonstrate subcriticality of the proposed saltcake dissolution in the tank. Additional criticality safety margin is provided by the presence of neutron absorbers (poisons) within saltcake, specifically in the form of insoluble solids that settle with the insoluble fissile material during the dissolution process. Sampling is not required for saltcake tanks containing canyon-like waste (e.g., contains no DWPF recycle waste) when bounding fissile material concentrations are used to calculate the areal density (Ref. 7).

6.4.3 WASTE EVAPORATION

Operation of the evaporators has been shown to not pose a criticality concern based on the abundance of neutron poisons and low solubility of uranium with the exception of the formation and accumulation of NAS scale.

Evaporator feed is monitored to ensure that the formation and accumulation of scale is minimized and that the enrichment of the feeds is such that they do not pose a criticality safety concern. Combinations of influent supernate evaluations, visual inspections and controlled evacuation are used to prevent criticality in the evaporator system.

The 242-16H Evaporator System has a high silicon content (due to DWPF waste streams); therefore, to prevent criticality concern, the 242-16H Evaporator System has barriers that monitor and protect the uranium enrichment which are summarized in Reference 7. In addition, the evaporator pot is visually inspected periodically, based on operating history for the presence of scale. If the scale volume approaches the applicable limit defined by an NCSE which is summarized in Reference 7, chemical cleaning is performed. Prior to cleaning, an NCSA is required to demonstrate that the requirements summarized in Reference 7 are met. The 242-16H Evaporator System nuclear criticality safety barriers are listed in Table 6.4-1.

The 242-25H Evaporator System has a high aluminum inventory; therefore, to prevent the formation of scale in the evaporator pot, influent supernate transfers that contain silicon are restricted to 120% of the historical maximum. This system allows influent transfers to contain Highly Enriched Uranium (HEU). The 242-25H Evaporator is visually inspected for the presence of scale every 90 operating days. If a controlled evacuation is performed every 30 operating days in order to monitor internal vessel piping for scale, the inspection frequency can be extended to every 180 operating days (see Section 5.5.4.2.25).

6.4.4 ARP/MCU

The NCSE for the ARP/MCU, as summarized in Reference 7, did not identify any credible scenarios for criticality in the ARP/MCU. The waste to be processed through the system will be qualified (actual waste in each macro-batch is analyzed to ensure that it is within the desired system parameters) prior to transferring the material out of Tank 49, the feed tank to the ARP process. The criticality safety of the ARP/MCU process is based on low enrichment and low soluble uranium and plutonium concentrations of salt solution from the source tanks to be processed through the ARP/MCU system and the “nature of the process” attributes of the process that prevent the accumulation of enough fissile material in any one location to be a criticality concern.

The key attributes of the process relied upon in the NCSE include:

- Sufficient MST is added to the salt solution stream in ARP (when the waste salt solution contains concentrations of strontium and actinides that exceed downstream acceptance criteria), the solution is agitated, and the solution is allowed sufficient time to adsorb the soluble strontium and soluble actinides on the MST solids to maintain facility efficiency. The NCSE demonstrated that failure to add the proper amount of MST, failure to agitate the solution, or failure to allow the proper time for the soluble strontium and soluble actinides to be adsorbed, while it would result in system inefficiencies and would be detected in the downstream process, would not result in criticality issues unless the failures occurred an incredible number of times.
- There are no known mechanisms in Tank 49, the qualification tank, or the process tanks of ARP to separate the insoluble neutron poisons from the insoluble fissile material. As part of the ARP process, the insoluble materials are filtered out of the salt solution and sent to DWPF for processing with other sludge streams.

- Salt batch qualification samples are representative of the qualification tank contents to ensure the proper blend that was analyzed in the batch qualification process is sent to the ARP.
- The Transfer Control Program, TSR Prohibited Operations, and the established Sampling Methodology are credited to help demonstrate the incredibility of criticality in the ARP/MCU system.

Reference 7 documents that sufficient administrative and/or design features are present to demonstrate that the potential for a criticality is incredible. The ARP/MCU nuclear criticality safety barriers are listed in Table 6.4-3. Nuclear criticality safety barriers for MST in Tank 49 and transfers of MST-containing materials through H-Area Diversion Box (HDB) HDB-7 are listed in Table 6.4-4.

An engineering evaluation is required for each ARP/MCU macro batch that demonstrates the processing of the batch will meet the requirements of the applicable NCSE documented in Reference 7. The engineering evaluation shall address the requirements of Table 6.4-3.

6.4.5 ALUMINUM DISSOLUTION

No credible scenarios for criticality during the aluminum dissolution process were identified in the Aluminum Dissolution NCSE as summarized in Reference 7. The criticality safety of the aluminum dissolution process is based on existing solubility limits, Transfer Control Program, Evaporator Feed Qualification Program, Tank 48 Unauthorized Operations controls in the TSR, and the nuclear criticality safety barriers listed in Table 6.4-2.

6.4.6 CHEMICAL HEEL REMOVAL

The NCSEs for Chemical Heel Removal, as summarized in Reference 7, did not identify any credible scenarios for criticality during the Chemical Heel Removal process initiated in Tanks 4, 8, and 9 through 15. The criticality safety of the Chemical Heel Removal process initiated in Tanks 4, 8, and 9 through 15 is based on existing Corrosion Control Program, Transfer Control Program, and Waste Tank Chemical Cleaning Program controls in the TSR and the nuclear criticality safety barriers listed in Tables 6.4-5 and 6.4-6.

6.5 CRITICALITY CONTROLS

All waste streams of fissionable material solutions from the 221-H and 221-F facilities contain sufficient neutron poisons to ensure subcriticality, regardless of the volume or mass of the material; therefore, the receipt of CSTF influent is not a function that requires active CSTF criticality controls. Waste generators (e.g., 221-H and 221-F facilities) interface with Concentration, Storage, and Transfer (CST) Engineering to monitor the waste characterization process of the influent waste streams. The existing basis for criticality safety within the CSTF is the low solubility of fissile material at corrosion chemistry alkaline solutions; however, the storage of liquid HLW in carbon steel waste tanks is only possible under alkaline chemistry conditions. Therefore, the alkaline chemistry conditions are not regarded as a necessary criticality control, but as a rudimentary process parameter that is necessary for HLW storage.

6.5.1 ENGINEERING CONTROLS

The engineering design features are summarized in the NCSASR (Ref. 7) and Tables 6.3-1, 6.4-1, 6.4-2, 6.4-3, 6.4-4, 6.4-5, and 6.4-6. Most of the design features credited in the NCSEs are passive.

6.5.2 ADMINISTRATIVE CONTROLS

The following items provide re-confirmation of the existing criticality safety basis for CSTF:

- OA cleaning of the 242-16H Evaporator System will reduce the pH of the cleaning process solution below neutral, thereby dissolving some fraction of the fissile material into solution beyond currently bounded solubility values and potentially without the necessary neutron poison component. An NCSE is necessary prior to OA cleaning operations of the 242-16H Evaporator System.
- Waste streams are verified inherently safe by the 221-H and 221-F facilities prior to transfer.
- The nuclear criticality safety barriers addressed in CSTF NCSEs and summarized in Reference 7 will be administered through routine CSTF practices and procedures. The nuclear criticality safety barriers for the 242-16H Evaporator are listed in Table 6.4-1.
- The nuclear criticality safety barriers addressed in the Tank 50 Valve Box (VB) NCSE as summarized in Reference 7 will be administered through transfer procedures. The nuclear criticality safety barriers for the Tank 50 VB are listed in Table 6.3-1.

- The nuclear criticality safety barriers addressed in the ARP/MCU NCSE and MST in Tank 49 NCSE as summarized in Reference 7 will be administered through procedures. The ARP/MCU nuclear criticality safety barriers are listed in Table 6.4-3. An engineering evaluation, meeting the requirements of Table 6.4-3, is required for each ARP/MCU salt macro batch that demonstrates the processing of the macro batch will meet the requirements as summarized in Reference 7. Nuclear criticality safety barriers for MST in Tank 49 and transfers of MST-containing materials through HDB-7 are listed in Table 6.4-4.
- The nuclear criticality safety barriers addressed in the Chemical Heel Removal NCSEs as summarized in Reference 7 will be administered through transfer procedures. The nuclear criticality safety barriers for Chemical Heel Removal are listed in Tables 6.4-5 and 6.4-6.
- The nuclear criticality safety barriers addressed in the Tank 33 Saltcake Dissolution NCSE as summarized in Reference 7 will be administered through procedures. The nuclear criticality safety barriers for Tank 33 Saltcake Dissolution are listed in Table 6.4-7.

6.5.3 APPLICATION OF THE INCREDIBILITY ARGUMENT

The probability of processing waste and creating an inadvertent criticality is a highly unlikely event in the CSTF due to the low fissile concentration of the waste streams and the abundant routine neutron poisons associated with the chemical processing of the generator waste streams.

The NCSEs as summarized in Reference 7 demonstrate that criticality is incredible for CSTF operations due to the multiple independent process barriers (i.e., elements of incredibility (EOIs), design features, administrative controls). These barriers are listed in Tables 6.3-1, 6.4-1, 6.4-2, 6.4-3, 6.4-4, 6.4-5, 6.4-6, and 6.4-7. The appropriate designation for each of the barriers (e.g., EOI, design features, administrative controls) is also listed in Tables 6.3-1, 6.4-1, 6.4-2, 6.4-3, 6.4-4, 6.4-5, 6.4-6, and 6.4-7.

6.6 CRITICALITY SAFETY PROGRAM

6.6.1 CRITICALITY SAFETY ORGANIZATION

The SRR CSC is primarily responsible for the criticality safety oversight of the CSTF. The site Criticality Safety Manual (Ref. 4), Criticality Safety Program Description Document (Ref. 2), and SRR CSC Charter (Ref. 5) provide program guidance for CST Engineering and support organizations, and implements all the applicable DOE Orders and ANS/ANSI standards. In addition, an evaluation team periodically reviews Functional Area 15 (Nuclear Criticality Safety) for the CSTF (Ref. 19).

6.6.2 CRITICALITY SAFETY PLANS AND PROCEDURES

Site criticality requirements are augmented by specific requirements contained in the CSTF Safety Basis. The administrative makeup of the support personnel that perform the criticality evaluations for the CSTF is delineated in Reference 4. The SRR CSC Charter (Ref. 5) provides an overview of the interfaces between criticality engineers and the support personnel within Management and Operations and Liquid Waste that ensures that facility processes related to criticality technical bases (e.g., waste tank chemistry) are maintained.

6.6.3 CRITICALITY SAFETY TRAINING

SCD-3 (Ref. 4) allows a tailored training approach for those facilities in which all criticality accident scenarios have been judged to be incredible. CST Operations and Engineering personnel receive training on the DSA and TSRs as part of their initial qualification training. As concerns/issues arise, new information is disseminated, typically in a briefing format and is, where appropriate, incorporated into the training material when it is revised. The NCS training requirements for SRR CSC members are provided in the SRR CSC Charter (Ref. 5).

6.6.4 DETERMINATION OF OPERATIONAL NUCLEAR CRITICALITY LIMITS

This section summarizes the analytical approach used to derive operational nuclear criticality limits and the basic justification of the appropriateness of such an approach.

The safety basis imposed for the CSTF is the single-parameter subcritical limits, (e.g., concentration, areal density, and mass or safe ratios of poison to fissile material) for NCS. These limits are acceptable because:

- The DSA is consistent with respect to ANSI/ANS-8.1-2014 (Ref. 9).
- Limits that are conservative with respect to ANSI/ANS-recognized values do not require specific evaluation because these standards are internationally recognized, are based on experimental data, and are recognized by DOE Order 420.1C (Ref. 3) as mandatory standards where applicable. The NCSEs justify the applicability of the ANSI/ANS values that are used.
- The safe ratios have been shown applicable in all waste conditions (Ref. 7).

6.6.5 CRITICALITY SAFETY INSPECTIONS/AUDITS

The SRR CSC assists the CSTF in the self-assessment process and performs regular committee reviews (Ref. 5, 19). In addition, an evaluation team periodically reviews Functional Area 15 (Nuclear Criticality Safety) for the CSTF (Ref. 19).

6.6.6 CRITICALITY INFRACTION REPORTING AND FOLLOW-UP

All criticality infractions are reported and followed up in accordance with SCD-3 (Ref. 4) and Procedure Manual 9B (Ref. 21).

6.7 CRITICALITY INSTRUMENTATION

There is no NCS alarm instrumentation in CSTF.

6.8 REFERENCES

1. Nuclear and Process Safety, Management Policies. WSRC-1-01, MP 4.5.

2. Criticality Safety Program Description Document (CSPDD) for the M&O Contractor (Savannah River Nuclear Solutions) and Liquid Waste Contractor (Savannah River Remediation). N-NCS-G-00136.

3. Facility Safety. DOE Order 420.1C, Change 1, U.S. Department of Energy, Washington, DC, February 2015.

4. Nuclear Criticality Safety Manual (U). SCD-3.

5. SRR Criticality Safety Committee Charter. N-SD-G-00001.

6. Preparation Guide for U.S. Department of Energy Nonreactor Nuclear Facility Documented Safety Analyses. DOE-STD-3009-94, Change Notice No. 3, U.S. Department of Energy, Washington, DC, March 2006.

7. Barnett, M.H. Nuclear Criticality Safety Analysis Summary Report: Concentration, Storage and Transfer Facilities and Operations (U). N-NCS-H-00195, Rev. 14, February 2017.

8. Standards/Requirements Identification Document, Functional Area 18.0, Nuclear and Process Safety (U). SRR-RP-2009-00558.

9. Nuclear Criticality Safety in Operations with Fissionable Materials Outside Reactors. ANSI/ANS-8.1-2014, American Nuclear Society, La Grange Park, IL.

10. Nuclear Criticality Control of Special Actinide Elements. ANSI/ANS-8.15-2014, American Nuclear Society, La Grange Park, IL.

11. Administrative Practices for Nuclear Criticality Safety. ANSI/ANS-8.19-2014, American Nuclear Society, La Grange Park, IL.

12. Nuclear Criticality Safety Training. ANSI/ANS-8.20-1991, American Nuclear Society, La Grange Park, IL.

13. Validation of Neutron Transport Methods for Nuclear Criticality Safety Calculations. ANSI/ANS-8.24-2007, American Nuclear Society, La Grange Park, IL.

14. Criticality Safety Engineer Training and Qualification Program. ANSI/ANS-8.26-2007, American Nuclear Society, La Grange Park, IL.

15. Chandler, M.C.. Estimated Sludge Inventory for Individual Tanks (U). WSRC-TR-94-0191, Rev 1, October 1994.

16. Clemmons, J.S. to Chandler, M.C. Assessment of Criticality Safety Parameters Based on Estimated Waste Tank Sludge Contents (U). HLW-HLE-94-0388, Westinghouse Savannah River Company, Aiken, SC, February 2, 1994.

17. Hutchens, G.J. to Freed, E.J. Bounding Enrichment in H-Area Salt Tanks. CBU-LTS-2003-00033, Rev. 0, Westinghouse Savannah River Company, Aiken, SC, June 6, 2003.

18. Thomas, J.T. Nuclear Safety Guide. TID-7016, Rev. 2, Oak Ridge National Laboratory, Oak Ridge, TN, June 1978.

19. SRR Assessment Performance Objectives and Criteria. http://bnet4.srs.gov/saNet/Home.aspx.

20. Deleted

21. Site Item Reportability and Issue Management (SIRIM). Procedure Manual 9B.

22. Sampling Methodology for CSTF DSA Administrative Programs. X-ESR-H-00052.

6.9 TABLES

Table 6.3-1 Nuclear Criticality Safety Barriers for Tank 50 Valve Box Transfers

A.	**Tank 50 Valve Box Transfers Design Features**
1	ETP includes a check valve (i.e., WEE-V-616) that prevents back flow into the Waste Concentrate Hold Tank and Waste Concentrate Tanks [Design Feature].
2	Tank 50 VB includes double valve isolation (i.e., WTS-V-282 and WTS-V-285) [Design Feature].
3	The ETP system includes the ETP Diversion Box (DB) valve (WEE-V-480) [Design Feature].
4	Valves in the HDB-7 are connected in order to direct waste transfers to the desired location. Jumpers are fabricated stainless steel pipe segments, and are designed to complete a specific transfer route [Design Feature].
5	The Tank 50 VB includes an isolation valve to isolate ETP from HDB-7 (i.e., WTS-V-274) [Design Feature].
B.	**Tank 50 Valve Box Transfers Operation**
1[(a)]	Controls governing waste transfers shall be established addressing determination of transfer path. This evaluation shall identify the necessary process area(s) and leak detection locations needed to support the transfer [administrative control].
2[(a)]	Controls governing waste transfers shall be established addressing independent verification of correct transfer path alignment. Use of correct motive force shall be independently verified after initiating the transfer [administrative control].
3[(a)]	Controls governing waste transfers shall be established addressing determination of equipment needed to stop transfers and siphons [administrative control].
4[(a)]	Waste transfers shall be monitored periodically for indications of transfer events (i.e., transfer error, siphoning, leakage). Monitoring shall extend beyond the transfer path to locations (e.g., pump tanks, waste tanks) determined by evaluation. Waste transfers with the potential to transfer material in amounts greater than 15,000 gallons require material balances [administrative control].
5	The ETP system shall be isolated from the Tank 50 VB, except during ETP effluent transfers, by alignment of the Tank 50 VB valves (i.e., WTS-V-282 and WTS-V-285) in accordance with the influent/effluent transfer procedure valve alignment checklist for Tank 50 [administrative control].
6	The isolation of the ETP system from flow through the Tank 50 VB is ensured by the ETP DB valve (WEE-V-480). The H-Area Tank Farm (HTF) Shift Manager, First Line Manager, or Control Room Manager is to request ETP personnel to ensure valve WEE-V-480 is closed in accordance with the governing transfer procedure for Tank 50, except during ETP transfers [administrative control].

Table 6.3-1 Nuclear Criticality Safety Barriers for Tank 50 Valve Box Transfers (continued)

7	CSTF Operations personnel shall periodically (i.e., annually) ensure that the functionality of the ETP check valve (i.e., WEE-V-616) is demonstrated via an approved leak test procedure [administrative control].
8	Where Tank 50 is neither the receipt nor the source tank, the isolation of the HDB-7 transfers from the Tank 50 VB is ensured by the valves in HDB-7 by alignment of the valves in accordance with the transfer procedure valve alignment checklist [administrative control].
9	The ETP system shall be isolated from HDB-7 transfers by alignment of the valves in the Tank 50 VB (i.e., WTS-V-274), (except for transfers from HDB-7 and the Tank 50 VB). The transfer procedure for transfers through HDB-7 is in place to prevent misalignment [administrative control].

(a) From Reference 7, Barriers B. 1-4 only apply to DWPF Recycle transfers that go through HDB-7.

Table 6.4-1 Nuclear Criticality Safety Barriers for 242-16H Evaporator System

A.	**242-16H Evaporator System Design Features**
1	Modification to the steam tube bundle, warming coil, evaporator shell thickness, evaporator shell insulation material, or to the evaporator pot shall be evaluated for criticality safety prior to implementing the modification [Design Feature].
B.	**242-16H Evaporator System Operation**
1	The DSA/Technical Safety Requirements level monitoring requirements minimize the leakage into the HDB-7 sump [EOI].
2	The maximum subcritical equivalent U-235 enrichment for the 242-16H Evaporator System is ≤ 5.5 weight percent (wt. %) [administrative control]. • The following equations are used to determine the equivalent U-235 and equivalent uranium: U-235 (eq) = U-235 + 1.4 × U-233 + 2.25 × (Pu-239 + Pu-241) U (eq) = U + 2.25 × (Pu-239 + Pu-241) • The plutonium content of the fissionable elements in the 242-16H Evaporator supernate shall not exceed 2 wt. %. • Waste streams with U-235 (eq) enrichment in excess of 5.5 wt. % shall not be added to the 242-16H Evaporator System. The CSTF Evaporator Feed Qualification Program shall ensure that the U-235 (eq) enrichment in the 242-16H Evaporator supernate does not exceed 5.5 wt. %. Exceptions: Waste transfers from HDB-7 sump to Tank 38 and from the 242-16H Evaporator sump to Tank 43 are exempted from this requirement.
3	For a waste transfer that could inadvertently be sent to the 242-16H Evaporator feed or drop tank [EOI]: • Transfer paths shall be set using approved procedures. • Transfer paths shall be verified by a second operator prior to the transfer. • During the transfer, the sending and receiving tank levels shall be checked every 30 minutes for the first two hours of the transfer. • Material balance shall be performed for transfers exceeding 15,000 gallons. The feed to the 242-16H Evaporator shall be secured if a transfer discrepancy exceeds 15,000 gallons. • Resumption of feed to the 242-16H Evaporator shall not begin until it is verified that the inadvertent transfer exceeding 15,000 gallons was not received in the 242-16H Evaporator feed or drop tank, or a documented engineering evaluation has been performed demonstrating that the evaporator will remain subcritical with the additional material.

Table 6.4-1 Nuclear Criticality Safety Barriers for 242-16H Evaporator System (continued)

4	Tank 43 is the designated feed tank for the 242-16H Evaporator System. The use of any other tank as the feed tank is prohibited [administrative control]. • Influents to Tank 43 shall be greater than or equal to 36 inches above the sludge layer (e.g., side wall penetrations, downcomers, backflush valve, etc.). • A minimum of 24 inches of separation shall be maintained between the sludge level and the feed pump recycle discharge in Tank 43. • A minimum of 24 inches of separation shall be maintained between the sludge layer and the feed pump suction in Tank 43. • If there is an indication that any of the separation distances above are not met (e.g., turbidity measurement, suspended solids in samples, error in specification on drawings), a. The feed to the evaporator shall be secured, but waste may be received in Tank 43. b. The feed to the evaporator shall not be restored until: - The minimum separation distance(s) is restored, and - The turbid zone of suspended solids is demonstrated to be less than or equal to 5.5 wt. % U-235 (eq) enrichment. c. If the separation distance cannot be restored, or the turbid zone was determined to be greater than 5.5 wt. % U-235 (eq) enrichment, a nuclear criticality safety evaluation shall be performed prior to restoring feed to the evaporator. • A minimum of 36 inches of supernate shall be maintained above the sludge layer in Tank 43. • Flygt mixers in Tank 43 shall be permanently disabled / de-energized.
5	Tank 38 is the designated drop tank for the 242-16H Evaporator System. The use of any other tank as the drop tank is prohibited [administrative control]. • Influents to Tank 38 shall be greater than or equal to 36 inches above the saltcake layer (e.g., side wall penetrations, downcomers, backflush valve, etc.).

Table 6.4-1 Nuclear Criticality Safety Barriers for 242-16H Evaporator System (continued)

6	Sampling and associated analysis of supernate in Tanks 38 and 43 to determine the U-235 (eq) enrichment shall be performed every 26 weeks [administrative control]. • Samples shall be taken at a minimum of two supernate depths. • Sample results shall be available within 60 days of sampling. In the case of an extended outage, the 26-week sampling requirement may be deferred, but the sampling and analysis shall be completed and the results shall be available prior to restarting the evaporator. • Sample results (accounting for measurement uncertainty) shall be reviewed by engineering for acceptability and consistency with past results and/or current process knowledge. • If sample results indicate a U-235 (eq) enrichment greater than 5.5 wt. %, the feed to the 242-16H Evaporator shall be secured until a documented engineering evaluation demonstrates subcriticality.
7	Prior to transfer into Tank 43, the U-235 (eq) enrichment of a non-qualified waste batch shall be determined based on the sample analysis of individual waste streams making up the waste batch or based on the sample analysis of the blended waste batch [administrative control]. • Samples shall be taken at a minimum of two depths of the waste batch. Exception: For mixed tanks, one sample is sufficient to characterize the tank contents when performed in accordance with Reference 22. • Sample results (accounting for measurement uncertainty) shall be reviewed by engineering for acceptability and consistency with past results and/or current process knowledge.
8	The maximum subcritical NAS deposit for the cleaning process shall be determined from Tables 5.4.1-1 and 5.4.1-2 of Reference 7 using the U-235 (eq) enrichment in the 242-16H Evaporator System and the maximum known equivalent uranium loading in the NAS deposit [administrative control].

Table 6.4-1 Nuclear Criticality Safety Barriers for 242-16H Evaporator System (continued)

9	The evaporator shall be inspected periodically to ensure the maximum subcritical NAS deposit for the cleaning process is not exceeded. The estimate of the NAS deposit accumulation shall account for measurement uncertainty [administrative control]. Using the NAS upper range accumulation rate of 15 gallons/month and the obtained maximum subcritical NAS deposit (in Item 8), the maximum time to inspection can be determined. Operations inspects for NAS deposit accumulation periodically at least once in the period between the evaporator start time and the maximum time to inspection. Note that the frequency of inspections is based on the evaporator operation hours, not the calendar hours.
10	Prior to introduction of a cleaning agent into the 242-16H Evaporator, two NAS deposit samples shall be taken and analyzed to determine the U-235 (eq) enrichment and the equivalent uranium loading [administrative control]. a. NAS deposit sample results shall be reviewed by engineering for acceptability and consistency with past results and/or current process knowledge. b. Using the obtained NAS deposit U-235 (eq) enrichment and the equivalent uranium loading (in Item 10), determine the maximum subcritical NAS deposit from Table 5.4.1-1 or 5.4.1-2 of Reference 7. c. The estimated (accounting for the measurement uncertainty) NAS deposits inside the evaporator (obtained in Item 8) shall be less than the maximum subcritical NAS deposit obtained in Item 10.b above. d. If the estimated (accounting for the measurement uncertainty) NAS deposits inside the evaporator (obtained in Item 8) exceeds the maximum subcritical NAS deposit obtained in Item 10.b above, a documented engineering evaluation shall be performed to demonstrate subcriticality.
11	An NCSA shall be written for each evaporator cleaning cycle to demonstrate the NAS cleaning process will meet criticality safety requirements of Reference 7 [administrative control].

Table 6.4-2 Nuclear Criticality Safety Barriers for Aluminum Dissolution

A.	**Aluminum Dissolution Design Features**
1[(a)]	Volume and diameter of a pump tank [Design Feature].

(a) From Reference 7, Barrier A.1 only applies if the pump tank is used as an intermediate tank between the tanker and the waste tank.

Table 6.4-3 Nuclear Criticality Safety Barriers for ARP/MCU

A.	**ARP/MCU Design Features**
1	Volume for each of the following: Extraction Contactor, 241-96H MST Strike Tank, Salt Solution Receipt Tank, Salt Solution Receipt Tank Internal Sump, Salt Solution Feed Tank, Salt Solution Feed Tank Internal Sump, Decontaminated Salt Solution (DSS) Hold Tank, DSS Hold Tank Internal Sump, DSS Hydraulic Accumulator, and DSS Decanter [Design Feature].
2	Diameter for each of the following: Contactors (Scrub, Wash, and Strip), Extraction Heat Exchangers (Aqueous and Solvent), DSS Coalescer, and DSS Pre-Filter [Design Feature].
3	Line location for each of the following: Salt Solution Receipt Tank Transfer Pump Suction, Salt Solution Feed Tank Transfer Pump Suction, DSS Hold Tank Transfer Pump Suction, and Contactor Drain Tank Transfer Pump Suction [Design Feature].
4	Fissile material transfer lines to MCU: Clarified Salt Solution line from the Late Wash Hold Tank [Design Feature].
B.	**Engineering Evaluation Requirements for ARP/MCU Macro Batches**
1	An engineering evaluation shall be written for each salt macro batch. The engineering evaluation shall determine the soluble uranium and plutonium concentration and the U-235(eq_sol) enrichment for each macro batch using [administrative control]: i. Sample analysis results for the qualification tank, ii. U-235(eq_sol) enrichment (wt%) = 100% x (U-235 + 1.4 * U-233) ÷ U. Where U is the summation of all uranium isotopes (e.g., U-233, U-234, U-235, U-236, U-238).
2	The engineering evaluation shall demonstrate that the soluble uranium and plutonium concentration and the U-235(eq_sol) enrichment in the batch salt solution are less than or equal to 50 mg/L, 0.3 mg/L, and 3 wt%, respectively [administrative control].
3	The engineering evaluation shall demonstrate that the free hydroxide concentration of qualified salt solution in the qualification tank is a minimum of 1.68 molar [administrative control].
C.	**ARP/MCU System Operation**
1	The nitric acid available to MCU is ≤ 15 wt% [administrative control].

Table 6.4-4 Nuclear Criticality Safety Barriers for MST in Tank 49 and Transfers of MST-Containing Materials Through HDB-7

Limits and requirements that act as barriers to criticality are listed below. A criticality incident in Tank 49 has been judged to be incredible provided the assumptions in Reference 7 and the items listed below are met.

A.	**Tank 49 Design Features**
1	Isolation of the Tank 49 B3 and B5 riser transfer paths can be accomplished by any of the following methods: 1) installation of a blank in the transfer line, 2) use of double isolation valves, or 3) use of a single leak checked isolation valve.* [Design Feature] *valves also include an element of administrative barriers
B.	**Tank 49 Operation**
1	Prior to initiating a transfer from 241-96H to 512-S, the transfer path shall be isolated from Tank 49 and HDB-7. Isolation of the transfer path shall be independently verified.* Isolation shall remain for the entire 241-96H to 512-S MST-containing material transfer operation. Isolation shall consist of [administrative control]: - Closing WTS-V-2013 and WTS-V-2014 in the Tank 49 Valve Box (B5 riser) and equivalent isolation method for B3 riser when installed to accommodate the B3 riser pump (e.g., blank, double valve isolation, single leak-checked valve), - Closing WTS-V-1 and WTS-V-2 in the 241-96H Valve Box, - Closing WTS-V-165 in HDB-7. * does not apply if a blank is used for isolation
2	Operations shall limit the MST-containing material transfer volume out of 241-96H to values corresponding to the U-235 (eq) enrichment in Tank 49 and the MST concentration in the strike tank as shown in Table 5.5.2-1 of Reference 7 [administrative control].
3	During transfers from 241-96H to 512-S, the Late Wash Precipitate Tank (LWPT) level shall be monitored to ensure the material containing MST is received in the LWPT. If waste is not received within the time period expected after transfer initiation (see Table 5.5.2-1 of Reference 7), the transfer from 241-96H shall be stopped immediately. Transfer from 241-96H may resume after determination that intended transfer conditions exist [administrative control].
4	Following an inadvertent transfer of material containing MST from 241-96H to a waste tank, transfer into and out of the receiving tank shall be stopped until the impact to criticality safety is evaluated [administrative control].

Table 6.4-5 Nuclear Criticality Safety Barriers for Chemical Heel Removal in Tanks 4 & 8

A.	**Design Features**
1	F-Area Pump Tank (FPT) FPT-1 and FPT-2 diameters and volumes [Design Feature].
B.	**Operation**
1	Prior to starting the Chemical Heel Removal process for a specific treatment tank, the fissionable material inventories (including enrichment) of the treatment tank shall be evaluated to ensure that they are less than or equal to the projected inventories shown in Table 5.6.1-1 (uranium enrichment ≤ 0.96 wt%) of Reference 7 [administrative control].
2	Prior to transferring OA to the treatment tank, operators shall set the OA transfer path using operating procedures to ensure that the OA will be transferred to the intended treatment tank (Tank 4 or 8). Prior to transferring OA from the tanker to the treatment tank, a second person shall verify that the OA transfer path is connected to the intended treatment tank [administrative control].
3	Before and after the completion of each batch transfer (one tanker truck) of OA, the level in the receiving treatment tank (Tank 4 or 8) shall be checked. If there is no increase in the intended receiving treatment tank level, additional OA acid transfers shall be stopped until an investigation determines why the level did not increase [administrative control].

Table 6.4-6 Nuclear Criticality Safety Barriers for Chemical Heel Removal in Tanks 9 through 15

A.	**Design Features**
1	Transfer Line Jumpers and Connectors – Jumpers are specially fabricated stainless steel pipe segments, with connectors for connecting to DB nozzles and are designed to complete a specific transfer route. [Design Feature]
2	Core Pipe and Jacket/Encasement – The core pipe is a Safety Class Structure, System, and Component (SSC) transfer line within Safety Significant SSC transfer line jacket/encasement which "provide passive containment (confinement for encasements) of liquid waste … to channel core pipe leakage to a Leak Detection Location.". [Design Feature]
B.	**Operation**
1	Prior to starting the Chemical Heel Removal process for a specific Treatment Tank an NCSA shall be completed to demonstrate the following: [administrative control] a) The U-235eq mass is less than or equal to 10 kg and the Pu-239 + Pu-241 mass is less than or equal to 6 kg. U-235eq does not have to be counted if the U-235eq enrichment is ≤ 0.96 wt%. b) The poison requirements of the CSTF Waste Acceptance Criteria Program are met. c) Where an acidic transfer path other than from Treatment Tanks 11 or 12 to Receipt Tank 51 (or Receipt Tank 13) is involved, the transfer path shall be evaluated to ensure: 1) DBs, VBs, or Drain VBs not covered in Reference 7 do not contain significant sludge heel 2) Existing scenarios bound the new transfers and any potential leaks on the transfer path.
2	Prior to transferring oxalic acid to the Treatment Tank, operators shall set the oxalic acid transfer path using operating procedures to ensure that the oxalic acid will be transferred to the intended Treatment Tank. Prior to transferring oxalic acid from the tanker to the Treatment Tank, a second person shall verify that the oxalic acid transfer path is connected to the intended Treatment Tank. [administrative control]
3	Before and after the completion of each batch transfer (one tanker truck) of oxalic acid, the level in the receiving Treatment Tank shall be checked. If there is no increase in the intended receiving Treatment Tank level, additional oxalic acid transfers shall be stopped until an investigation determines why the level did not increase. [administrative control]

Table 6.4-7 Nuclear Criticality Safety Barriers for Saltcake Dissolution in Tank 33

A.	**Operation**
1	Prior to beginning the sludge removal process in Tank 33, an engineering evaluation shall be written to demonstrate that the solids layer in Tank 33 is not above 117.7 inches. [administrative control]