X-SD-J-00007
Revision: 2
Date: October 28, 2019

SALT WASTE PROCESSING FACILITY PROJECT

AIR PULSE AGITATORS

SYSTEM DESCRIPTION

Prepared, reviewed, and accepted by:

10/28/19

Nicholas DesRocher
SWPF Cognizant Engineer

Date

William Bayne Brasel ORC96176.ID

Digitally signed by William Bayne Brasel ORC96176.ID
Date: 2019.10.28 21:58:33 -04'00'

William Brasel
SWPF Engineering Integration Manager

Date

10/29/19

Dr. Thomas D. Burns, Jr., P.E.
SWPF Director of Engineering

Date

SUMMARY OF CHANGES

Revision No.	Date	Description of Change
0	05/21/08	Issued for Enhanced Final Design
1	09/01/2015	Revise per DCN-1478. Incorporate DCN-0803 Rev. 2. Complete rewrite no revision bars shown.
2	10/28/2019	Revise per DCN-7015, DCN-2101, and DCN-2234.

TABLE OF CONTENTS

1.0 SCOPE 1

2.0 GENERAL OVERVIEW 2

3.0 APAS SYSTEM DESCRIPTION 4

3.1 System Function 4
3.2 Operational Overview 4
3.3 Configuration Information 5
3.3.1 Description of System 5
3.3.2 Major Components 6
3.3.3 Stream Data 6
3.3.4 Physical Location and Layout 6
3.3.5 System Control Features and Interlocks 7
3.4 Operations 12
3.4.1 Initial Configuration 12
3.4.2 System Startup 13
3.4.3 Normal Operations 13
3.4.4 Off-Normal and Recovery Operations 16
3.4.5 System Shutdown 16

4.0 REFERENCES 17

List of Figures

Figure 2-1. Diagram of Typical APA System 3
Figure 2-2. Typical Top View Orientation of Pulse Pots in Process Tank 3
Figure 2-3. Simplified Schematic of Components Inside Enclosure 4
Figure 3-1. Start of Pulse Cycle 15
Figure 3-2. End of Pulse Cycle 15
Figure 3-3. Typical Seismic Component Designations 17

List of Tables

Table 3-1. APA Systems P&IDs and PFDs 5
Table 3-2. APA System Major Components 6
Table 3-3. APA Instruments and Control Loops 8

List of Appendices

Appendix A. APA Design Requirements
Appendix B. APA System Components Requirements

ACRONYMS AND ABBREVIATIONS

APA	Air Pulse Agitator
AST-A	Alpha Sorption Tank-A (TK-101)
BPCS	Basic Process Control System
FFT-A	Filter Feed Tank-A (TK-102)
ft	Foot/Feet
in. w.c.	Inches Water Column
NA	Not Applicable
P&ID	Piping and Instrumentation Diagram
PCV	Pressure Control Valve
PFD	Process Flow Diagrams
PMVS	Pulse Mixer Ventilation System
psig	Pounds per square inch gauge
s.g.	Specific gravity
scfm	Standard cubic feet per minute
SQL	Structured Query Language
SS	Stainless Steel
SSFT	Salt Solution Feed Tank (TK-109)
SSRT	Sludge Solids Receipts Tank (TK-104)
SWPF	Salt Waste Processing Facility
T/T	Tangent/Tangent
WWHT	Wash Water Hold Tank (TK-105)

DEFINITIONS/GLOSSARY

Component	Functional Description
Pressure Control Valve (PCV)	The PCV maintains the receiver pressure at the set pressure. Set pressures vary depending on the Air Pulse Agitator (APA) system and on the liquid level inside the process tank.
Restricting Orifice A	Restricting Orifice A is used to limit the maximum air flow rate to the APA system in the event of a failure.
Restricting Orifice B	Restricting Orifice B is used to limit the maximum air flow rate to the supply air manifold at the beginning of each pulse, which prevents excessive depressurization of the air receiver during the initial period of the pulse.
Supply Air Manifold	The Supply Air Manifold allows for similar piping arrangements to each pulse pot so the supply air pressure drop can be similar to each pulse pot.
Vent Manifold	The Vent Manifold receives vent connections from each pulse pot of a single APA system. The Vent Manifold allows for similar piping arrangements from each pulse pot so the vented air pressure drop can be similar from each pulse pot.
Supply Air Isolation Valve	The Supply Air Isolation Valve is used to isolate the air receiver from the supply air manifold when the APA system is operating at a prescribed low liquid level inside the process tank.
Process Tank Vent Isolation Valve	The Process Tank Vent Isolation Valve is used to supply vent air from the process tank to the air supply manifold when the APA system is operating at a prescribed low liquid level inside the process tank. This valve remains closed during all other APA operations.
Pulse Mixer Enclosure	The Pulse Mixer Enclosure is used to provide radiation containment of the components located inside the enclosure.
Pulse Mixer Ventilation System (PMVS)	The PMVS is used to remove the periodic vent air from the vent manifolds.
Isolation Valves	Isolation Valves located within the pulse mixer enclosure air supply and vent component piping are used to isolate components during flush-down and repair operations.
Basic Process Control System (BPCS)	The BPCS is used to control the pulse timer and pulse sequence of each pulse pot. It is also used to control the set pressure of the PCV. The BPCS reads the process tank

DEFINITIONS/GLOSSARY (cont.)

Component	Functional Description
	liquid level and relates this information to a built-in control program that automatically sets the correct pulse time and supply air pressure setting, based on the process tank liquid level.
Pulse Pot	The Pulse Pot is a vessel located inside the process tank that is used to provide a pulse volume.
Process Tank	The Process Tank contains liquid and is used for processing.
3-Way Pulse Pot Valve	The 3-Way Pulse pot Valve is used to supply compressed air to pulse pots during the pulse cycle and to vent compressed air from pulse pots. The valve can only be open in two positions and fails to the vent side.
APA Charge Tank	The APA Charge Tank is an air receiver located next to the pulse mixer enclosure.
Air Pressure Control Valve	The Air Pressure Control Valve is used to maintain a set pressure inside the APA charge tank.
Return Line	The Return Line is the vent line connecting the vent manifold to the PMVS header.
PMVS Header	The PMVS Header is the vent header that services all APA systems.

1.0 SCOPE

The APA systems provide agitation to process tanks located in the dark cells of the Salt Waste Processing Facility (SWPF). Each APA system must provide the necessary agitation for cooling, mixing, and solids suspension.

The following process vessels are agitated with APA systems:

- AGT-101 is installed in the Alpha Sorption Tank-A (AST-A) (TK-101);
- AGT-102 is installed in the Filter Feed Tank-A (FFT-A) (TK-102);
- AGT-104 is installed in the Sludge Solids Receipts Tank (SSRT) (TK-104);
- AGT-105 is installed in the Wash Water Hold Tank (WWHT) (TK-105); and
- AGT-109 is installed in the Salt Solution Feed Tank (SSFT) (TK-109).

The APA system interfaces with components in the following System Descriptions:

- E-SD-J-00002, *SWPF Electrical System Description* (Draft);
- J-SD-J-00002, *SWPF Instrumentation and Controls System Description*[1];
- M-SD-J-00005, *SWPF Utilities System Description*[2];
- X-SD-J-00001, *SWPF Alpha Strike Process System Description*[3]*;* and
- X-SD-J-00002, *SWPF Caustic-side Solvent Extraction System Description*[4].
- X-SD-J-00009, *SWPF Caustic-side Solvent Extraction with Next Generation Solvent (NGS) System Description*[5]

The safety analysis requirements related to system functions for this system are documented in Chapter 4 of S-SAR-J-00002, *SWPF Documented Safety Analysis*[6].

The safety analysis requirements related to operability for this system are documented in Chapter 5 of S-SAR-J-00002[6].

The discrete project design requirements for this system are documented in P-DB-J-00002, *SWPF Design Criteria Database*[7].

As Part of the maintenance of the SWPF Master Equipment list (see PP-EN-5042, *Master Equipment List*[8]), all permanent plant equipment is assigned a unique tag number. Each component (equipment, instrumentation, specialty item, etc.) is assigned to one (and only one) CSE system code. Structured Query Language (SQL) reports are generated (real time) off the controlled Master Equipment List. These are filterable by the CSE system. A complete listing of all components associated with this system can be found using the following reports, and filtering by APA:

- MEL Cables

- MEL Equipment
- MEL Instruments
- MEL Lines
- MEL Manual Valves
- MEL Specialty Items

Similarly, all essential and support drawing are coded to the appropriate CSE system code (with only one code allowed per drawing). Using the following link: Drawing Category Status, a report may be generated for APA and selecting the drawing type (Essential, Support). Reference drawings are not assigned System Codes and not required to be maintained current with facility modifications per PP-EN-5001[8], *Design Control* and P-CDM-J-00001, *Configuration Management Plan*[9].

2.0 GENERAL OVERVIEW

Figure 2-1 provides a diagram of a typical APA system and Figure 2-2 shows a top view orientation of pulse pots in a process tank. Figure 2-3 depicts a simplified schematic of components inside an enclosure.

Figure 2-1. Diagram of Typical APA System

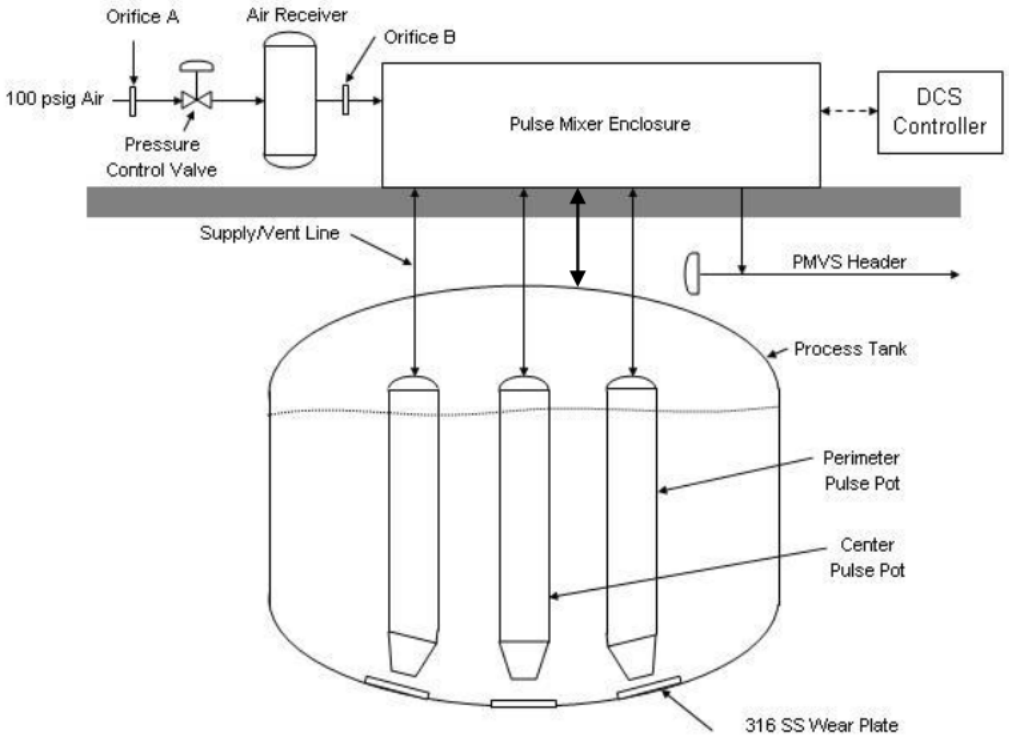

Figure 2-2. Typical Top View Orientation of Pulse Pots in Process Tank

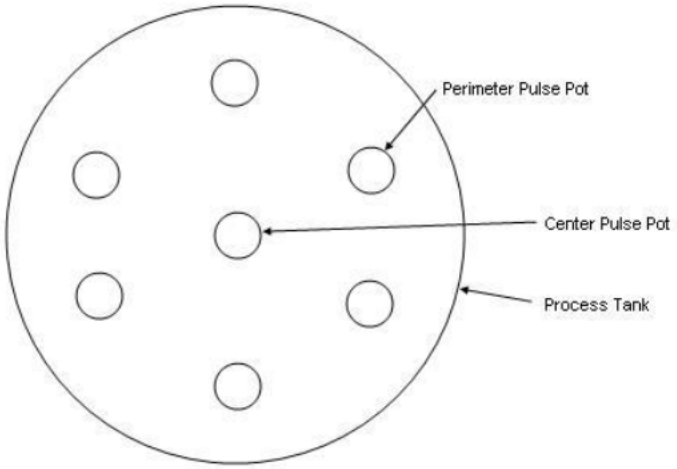

Figure 2-3. Simplified Schematic of Components Inside Enclosure

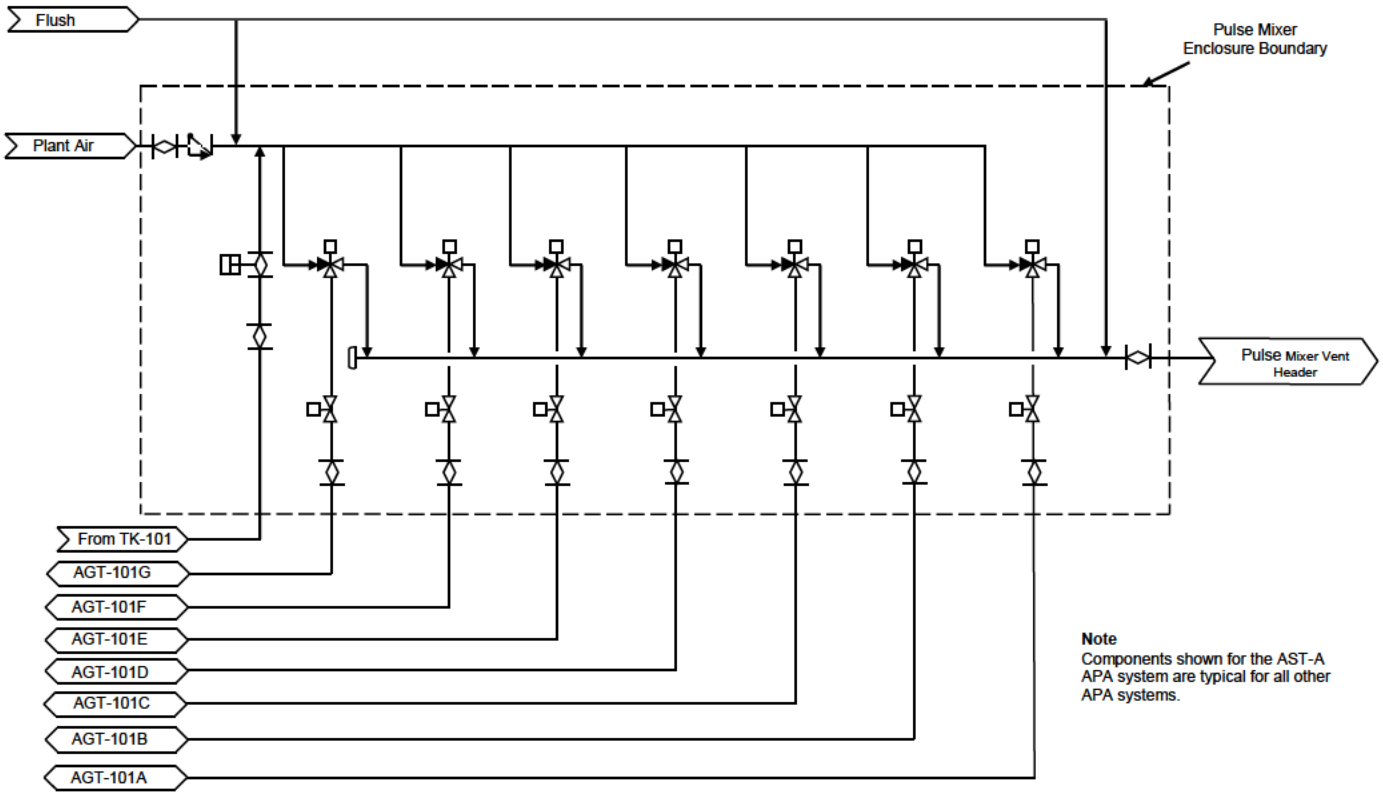

3.0 APAS SYSTEM DESCRIPTION

3.1 System Function

The function of the APA systems installed in process vessels is to provide the necessary agitation for cooling, mixing, and solids suspension during all phases of operation. Operational sequences for each process vessel are described in the corresponding SWPF System Description.

3.2 Operational Overview

APA systems are used to agitate the AST-A (TK-101), FFT-A (TK-102), SSRT (TK-104), WWHT (TK-105), and SSFT (TK-109) within the SWPF. Each APA system contains pulse pots inside the process tank, with one pulse pot located in the center of the tank and the remaining pulse pots located symmetrically around the center pulse pot. The APA systems use compressed air to force liquid out of each pulse pot through a nozzle located at the bottom of the pulse pot and a vacuum system to assist in pulling liquid back in. The nozzle size, number of pulse pots, and size of the pulse pots vary for each APA system. A periodic pulse jet of liquid is created each time a pulse pot is emptied and filled during this action. This pulsing activity provides the agitation for the process tank. Valves and actuators associated with each APA system are located in a pulse mixer enclosure. Pulse mixer enclosures are shielded enclosures that house the APA

components requiring access for maintenance. APA components located inside the dark cells have no moving parts, require no maintenance, and are designed to last the operating life of the SWPF. A 316 stainless steel (SS) wear plate with a tungsten carbide coating are located at the tank bottom beneath each jet nozzle to prevent erosion wear to the tank bottom.

The amount of agitation provided by an APA system is controlled by the rate of circulation created by the periodic pulse volumes of liquid, the liquid jet power created by the pulse jets and the area of influence affected by the location of the pulse jets. Maximum agitation is achieved when the supply air is at the highest pressure setting possible for each APA system. The pulse time (varies between 7 and 8 seconds) is based on the density of the fluid inside the process tank. The available pulse volume is maximized when the liquid level inside the process tank is at a maximum. The APA systems can operate at lower tank levels by reducing the drive pressure. Reducing the drive pressure prevents air from blowing out of the pulse jet nozzle (over blow).

Each APA system is also capable of operating in a lift and drop method (two modes). During these modes of operation, the compressed air is no longer needed to drive the liquid out of the pulse pots. Instead, liquid is drawn up into the pulse pot using the vacuum system and then vented to the headspace of the tank allowing the solutions to flow out of the pulse pot by gravity. The lift and drop modes are used when the process tank is below a specified level. There are two lift and drop modes. The first mode uses all of the pulse pots. At lower tank levels, only the center pulse pot is used.

The vessels have been designed and fabricated to accommodate the stress and fatigue associated with over blow. During testing, it was noted that a small over blow at the end of the drive phase significantly increased mixing. For normal operation, a drive with over blow will not be required for mixing of the vessel. However, during long term stabilization, this rapid mixing may be beneficial. Additional testing in the vessels is planned during Integrated Water Runs and Cold Commissioning to validate the effectiveness of this mixing.

3.3 Configuration Information

3.3.1 Description of System

Refer to Piping and Instrumentation Diagrams (P&IDs) and Process Flow Diagrams (PFDs) listed in Table 3-1.

Table 3-1. APA Systems P&IDs and PFDs

Diagram Number	Diagram Title
M-M5-J-0001	*SWPF Simplified Process Flow Schematic (U)*[10]
M-M6-J-0005	*SWPF Process Building Alpha Sorption Tank-A TK-101 P&ID (U)*[11]
M-M6-J-0007	*SWPF Process Building Filter Feed Tank-A TK-102 P&ID (U)* [12]
M-M6-J-0014	*SWPF Process Building Sludge Solids Receipt Tank TK-104 P&ID (U)* [13]
M-M6-J-0017	*SWPF Process Building Wash Water Hold Tank TK-105 P&ID (U)*[14]

Table 3-1. APA Systems P&IDs and PFDs (cont.)

Diagram Number	Diagram Title
M-M6-J-0027 SH1	*SWPF Process Building Pulse Mixer Enclosure A P&ID (U)*[15]
M-M6-J-0027 SH2	*SWPF Process Building Pulse Mixer Enclosure A P&ID (U)*[16]
M-M6-J-0028 SH1	*SWPF Process Building Pulse Mixer Enclosure B P&ID (U)*[17]
M-M6-J-0028 SH2	*SWPF Process Building Pulse Mixer Enclosure B P&ID (U)*[18]
M-M6-J-0029	*SWPF Process Building Pulse Mixer Enclosure C P&ID (U)*[19]
M-M6-J-0030	*SWPF Process Building Salt Solution Feed Tank TK-109 P&ID (U)* [20]
M-M6-J-0092	*SWPF Process Building Plant Air Distribution to Air Pulse Agitators P&ID (U)*[21]

3.3.2 Major Components

The APA systems major components are provided in Table 3-2.

Table 3-2. APA System Major Components

Component	Description
AST-A APA (AGT-101)	Agitator used to provide agitation to the AST-A (TK-101). This APA includes 7 pulse pots. System Air Requirements = 276 Standard cubic feet per minute (scfm) (see M-CLC-J-00090, *SWPF AST-A Pulse Mixer Sizing Calculation*[22])
AST-A APA Charge Tank (TK-128)	Air receiver that provides compressed air volume for the AGT-101 pulse pots Capacity: 300 gallons Size: 3'-0" diameter x 5'-0" Tangent/Tangent (T/T) Material: 304L SS
FFT-A APA (AGT-102)	Agitator used to provide agitation to the FFT-A (TK-102). This APA includes 7 pulse pots. System Air Requirements = 321 scfm (see M-CLC-J-00091, *SWPF FFT-A Pulse Mixer Sizing Calculation*[23])
FFT-A APA Charge Tank (TK-129)	Air receiver that provides compressed air volume for the AGT-102 pulse pots Capacity: 300 gallons Size: 3'-0" diameter x 5'-0" T/T Material: 304L SS
SSRT APA (AGT-104)	Agitator used to provide agitation to the SSRT (TK-104). This APA includes 4 pulse pots. System Air Requirements = 134 scfm (see M-CLC-J-00092, *SWPF SSRT Pulse Mixer Sizing Calculation*[24])

Table 3-2. APA System Major Components (cont.)

Component	Description
SSRT APA Charge Tank (TK-131)	Air receiver that provides compressed air volume for the AGT-104 pulse pots Capacity: 300 gallons Size: 3'-0" diameter x 5'-0" T/T Material: 304L SS
WWHT APA (AGT-105)	Agitator used to provide agitation to the WWHT (TK-105). This APA includes 5 pulse pots. System Air Requirements = 183 scfm (see M-CLC-J-00093, *SWPF WWHT Pulse Mixer Sizing Calculation*[25])
WWHT APA Charge Tank (TK-133)	Air receiver that provides compressed air volume for the AGT-105 pulse pots Capacity: 300 gallons Size: 3'-0" diameter x 5'-0" T/T Material: 304L SS
SSFT APA (AGT-109)	Agitator used to provide agitation to the SSFT (TK-109). This APA includes 7 pulse pots. System Air Requirements = 276 scfm (see M-CLC-J-00094, *SWPF SSFT Pulse Mixer Sizing Calculation*[26])
SSFT APA Charge Tank (TK-132)	Air receiver that provides compressed air volume for the AGT-109 pulse pots. Capacity: 300 gallons Size: 3'-0" diameter x 5'-0" T/T Material: 304L SS

The APA design requirements are provided in Appendix A and system component requirements are provided in Appendix B. The requirements are provided for full process tank capacities.

3.3.3 Stream Data

The APA systems interface with the compressed air system and PMVS. No process streams are associated with the APA systems. Stream data for process tank contents mixed with the APA systems are located in the applicable SWPF System Description.

3.3.4 Physical Location and Layout

The boundaries for each APA system include the air supply, control valves, and pulse pots located inside the process tank for that APA. The air supply for each APA system begins at the main tie-in to the plant air supply header and includes the PCV, Orifice A (if applicable), Orifice B, and associated piping inside the pulse mixer enclosure. The APA charge tanks are located next to the shielded enclosure, along with the PCVs and supply air isolation valves. The enclosures contain all system components that are subject to failure and are shielded for radiation exposure. Within the enclosure is the supply air manifold. The 3-way valves are the interface between the air supply and PMVS. The vent manifold is located downstream of the 3-way valves and is used to collect vented air from the pulse pots. This vent manifold is connected to the

PMVS header. Flush lines shown in Figure 2-3 are used to flush down the individual lines to each pulse pot and flush down the air supply and vent manifolds.

Pulse pots are located inside the process tanks in the dark cells. Each pulse pot consists of a cylinder with an air supply/vent line at the top and a pulse jet nozzle at the bottom. Pulse pots are oriented vertically inside the tanks.

The pulse mixer vent header drain line contains a liquid-filled loop seal with level monitoring to prevent back-migration of contamination from ASDT (TK-601) and to provide a loop seal for the pulse mixer vent header.

3.3.5 System Control Features and Interlocks

3.3.5.1 System Monitoring

The following components in the APA system are monitored.

- The process tank level will be continuously monitored and used as an input parameter by the BPCS to determine the appropriate pulse time and downstream set pressure for the APA charge tanks. The process tank level will also be used to prevent startup if the liquid level inside the process tank is lower than is determined adequate for APA operations.
- The process tank density will be continuously monitored and used as an input parameter by the BPCS to determine the appropriate correction to the pulse time and downstream set pressure for the APA charge tanks.
- The process tank vent pressure will be continuously monitored and used to shut down the APA system if the process tank vent pressure exceeds the air pressure inside the process cell in which the tank is located.
- Position indicators for all control valves within each APA system will be monitored by the BPCS to enable Operators to visually recognize the sequence of operations.

3.3.5.2 Control Functions

Process tank level and density are monitored within the BPCS and are used to adjust APA pulse times and compressed air set pressures. Pulse times and supply air set pressures are programmed into the BPCS for each APA system and are determined based on the liquid level and liquid density inside the process tank. The following instruments provide the necessary controls for each APA system (see Table 3-3).

Table 3-3. APA Instruments and Control Loops

AGT-101				
Equipment/ Instrument Number	**P&ID**	**Scale Sheet**	**Monitored Variable**	**Indications**
LIT-1106	M-M6-J-0005[11]	J-JZ-J-0010, *SWPF LI-1106 AST-A Level*[27]	AST-A (TK-101) Liquid Level	gallons
DIT-1106	M-M6-J-0005[11]	J-JZ-J-00104, *SWPF DI-1106 AST-A Density*[28]	AST-A (TK-101) Liquid Density	specific gravity (s.g.)
PDIT-4480	M-M6-J-0005[11]	J-JZ-J-00106, *SWPF PDI-4480 AST-A Vacuum*[29]	Transmits differential air pressure between cell air and AST-A (TK-101) vapor space air	Inches water column (in. w.c.)
KIC-4544	M-M6-J-0027 SH1[15]	Not Applicable (N/A)	Controls position of each 3-way and 2-way pulse pot valve. Used to supply compressed air for pulsing and vent pulse pot during filling	Valve position
HIS-4487	M-M6-J-0027 SH1[15]	N/A	Controls position of supply air valve HV-4487. Used to isolate compressed air during lift and drop pulsing	Open/Closed
HIS-4484	M-M6-J-0027 SH1[15]	N/A	Controls position of supply air valve HV-4484. Used to supply tank vent air during lift and drop pulsing	Open/Closed
PIC-4483	M-M6-J-0092	J-JZ-J-00850, *SWPF PIC-4483 AST-A APA Charge Tank Pressure*[30]	Controls downstream set pressure of PCV PV-4483. Used to control air pressure in AST-A APA Charge Tank (TK-128)	Pounds per square inch gauge (psig)
PIT-4483	M-M6-J-0092	J-JZ-J-00850[30]	Transmits air pressure inside AST-A APA Charge Tank (TK-128) to PIC-4483	psig

Table 3-3. APA Instruments and Control Loops (cont.)

AGT-102				
Equipment/ Instrument Number	**P&ID**	**Scale Sheet**	**Monitored Variable**	**Indications**
LIT-1108	M-M6-J-0007[12]	J-JZ-J-0012, *SWPF LI-1108 FFT-A Level*[31]	FFT-A (TK-102) Liquid Level	gallons
DIT-1108	M-M6-J-0007[12]	J-JZ-J-00110, *SWPF DI-1108 FFT-A Density*[32]	FFT-A (TK-102) Liquid Density	s.g.
PDIT-4490	M-M6-J-0007[12]	J-JZ-J-00112, *SWPF PDI-4490 FFT-A Vacuum*[33]	Transmits differential air pressure between cell air and FFT-A (TK-102) vapor space air	in. w.c.
KIC-4545	M-M6-J-0027 SH2[16]	N/A	Controls position of each 3-way and 2-way pulse pot valve. Used to supply compressed air for pulsing and vent pulse pot during filling	Valve position
HIS-4495	M-M6-J-0027 SH2[16]	N/A	Controls position of supply air valve HV-4495. Used to isolate compressed air during lift and drop pulsing	Open/Closed
HIS-4494	M-M6-J-0027 SH2[16]	N/A	Controls position of supply air valve HV-4494. Used to supply tank vent air during lift and drop pulsing	Open/Closed
PIC-4493	M-M6-J-0092[21]	J-JZ-J-00851, *SWPF PIC-4493 FFT-A APA Charge Tank Pressure*[34]	Controls downstream set pressure of PCV PV-4493. Used to control air pressure in FFT-A APA Charge Tank (TK-129)	psig
PIT-4493	M-M6-J-0092[21]	J-JZ-J-00851[34]	Transmits air pressure inside FFT-A APA Charge Tank (TK-129) to PIC-4493	psig

Table 3-3. APA Instruments and Control Loops (cont.)

AGT-104				
Equipment/ Instrument Number	**P&ID**	**Scale Sheet**	**Monitored Variable**	**Indications**
LIT-1274	M-M6-J-0014[13]	J-JZ-J-0014, *SWPF LI-1284 SSRT Level*[35]	SSRT (TK-104) Liquid Level	gallons
DIT-1274	M-M6-J-0014[13]	J-JZ-J-00157, *SWPF DI-1274 SSRT Density*[36]	SSRT (TK-104) Liquid Density	s.g.
PDIT-4510	M-M6-J-0014[13]	J-JZ-J-00159, *PDI-4510 SSRT Vacuum*[37]	Transmits differential air pressure between cell air and SSRT (TK-104) vapor space air	in. w.c.
KIC-4561	M-M6-J-0028 SH1[17]	N/A	Controls position of each 3-way and 2-way pulse pot valve. Used to supply compressed air for pulsing and vent pulse pot during filling	Valve position
HIS-4515	M-M6-J-0028 SH1[17]	N/A	Controls position of supply air valve HV-4515. Used to isolate compressed air during lift and drop pulsing.	Open/Closed
HIS-4514	M-M6-J-0028 SH1[17]	N/A	Controls position of supply air valve HV-4514. Used to supply tank vent air during lift and drop pulsing.	Open/Closed
PIC-4513	M-M6-J-0092[21]	J-JZ-J-00853, *SWPF PIC-4513 SSRT APA Charge Tank Pressure*[38]	Controls downstream set pressure of PVC PV-4513. Used to control air pressure in SSRT APA Charge Tank (TK-131)	psig
PIT-4513	M-M6-J-0092[21]	J-JZ-J-00853[38]	Transmits air pressure inside SSRT APA Charge Tank (TK-131) to PIC-4513.	psig

Table 3-3. APA Instruments and Control Loops (cont.)

AGT-105				
Equipment/ Instrument Number	**P&ID**	**Scale Sheet**	**Monitored Variable**	**Indications**
LIT-1316	M-M6-J-0017[14]	J-JZ-J-0016, *SWPF LI-1316 WWHT Level*[39]	WWHT (TK-105) Liquid Level	gallons
DIT-1316	M-M6-J-0017[14]	J-JZ-J-00174, *SWPF DI-1316 WWHT Density*[40]	WWHT (TK-105) Liquid Density	s.g.
PDIT-4500	M-M6-J-0017[14]	J-JZ-J-00176, *SWPF PDI-4500 WWHT Vacuum*[41]	Transmits differential air pressure between cell air and WWHT (TK-105) vapor space air	in. w.c.
KIC-4562	M-M6-J-0028 SH2[18]	N/A	Controls position of each 3-way and 2-way pulse pot valve. Used to supply compressed air for pulsing and vent pulse pot during filling	Valve position
HIS-4502	M-M6-J-0028 SH2[18]	N/A	Controls position of supply air valve HV-4502. Used to isolate compressed air during lift and drop pulsing.	Open/Closed
HIS-4504	M-M6-J-0028 SH2[18]	N/A	Controls position of supply air valve HV-4504. Used to supply tank vent air during lift and drop pulsing.	Open/Closed
PIC-4503	M-M6-J-0092[21]	J-JZ-J-00852, *SWPF PIC-4503 WWHT APA Chart Tank Pressure*[42]	Controls downstream set pressure of PCV PV-4503. Used to control air pressure in WWHT APA Charge Tank (TK-133)	psig
PIT-4503	M-M6-J-0092[21]	J-JZ-J-00852[42]	Transmits air pressure inside WWHT APA Charge Tank (TK-133) to PIC-4503.	psig

Table 3-3. APA Instruments and Control Loops (cont.)

AGT-109				
Equipment/ Instrument Number	**P&ID**	**Scale Sheet**	**Monitored Variable**	**Indications**
LIT-1390	M-M6-J-0030[20]	J-JZ-J-0018, *SWPF LI-1390 SSFT Level*[43]	SSFT (TK-109) Liquid Level	gallons
DIT-1390	M-M6-J-0030[20]	J-JZ-J-00198, *SWPF DI-1390 SSFT Density*[44]	SSFT (TK-109) Liquid Density	s.g.
PDIT-4520	M-M6-J-0030[20]	J-JZ-J-00200, *SWPF PDI-4520 SSFT Vacuum*[45]	Transmits differential air pressure between cell air and SSFT (TK-109) vapor space air	in. w.c.
KIC-4575	M-M6-J-0029[19]	N/A	Controls position of each 3-way and 2-way pulse pot valve. Used to supply compressed air for pulsing and vent pulse pot during filling	Valve position
HIS-4522	M-M6-J-0029[19]	N/A	Controls position of supply air valve HV-4522. Used to isolate compressed air during lift and drop pulsing.	Open/Closed
HIS-4524	M-M6-J-0029[19]	N/A	Controls position of supply air valve HV-4524. Used to supply tank vent air during lift and drop pulsing.	Open/Closed
PIC-4523	M-M6-J-0092[21]	J-JZ-J-00854, *SWPF PIC-4523 SSFT APA Charge Tank Pressure*[46]	Controls downstream set pressure of PCV PV-4523. Used to control air pressure in SSFT APA Charge Tank (TK-132)	psig
PIT-4523	M-M6-J-0092[21]	J-JZ-J-00854[46]	Transmits air pressure inside SSFT APA Charge Tank (TK-132) to PIC-4523.	psig
LIT-4525	M-M6-J-0029[19]	J-JZ-J-00197, *SWPF LI-4525 Pulse Mixer Vent Header Drain Loop Seal Level*[47]	Pulse Mixer Vent Header Drain Loop Seal Level	Inches

3.4 Operations

3.4.1 Initial Configuration

The following description applies to each APA system at startup:

- Three-way pulse pot valves and 2-way pulse pot valves are open to the PMVS header so that each pulse pot is under vacuum pressure equal to 3 feet (ft) of water column.
- The liquid level inside the process tank is of sufficient height to operate the APA system (mode of operation is level dependent). Each APA system has a minimum liquid level in which it can operate effectively.
- Compressed air will not be isolated if the liquid level inside the process tank is greater than the level determined for lift and drop pulse action. If the liquid level is lower than the liquid level determined for lift and drop pulse action, the compressed air will be isolated and the tank vent air will be open to drive the pulse.
- The PMVS must be fully functional and operating.
- The Process Vessel Vent System must be fully functional and operating.

3.4.2 System Startup

Each APA system can be started manually by an Operator in the Control Room.

3.4.3 Normal Operations

The APA system will pulse the pulse pots sequentially. Each 3-way valve has a common port connected to the pulse pot piping. The 3-way valve aligns the pulse pot to the vent manifold while the pulse pot is full and waiting to be pulsed. A designated first pulse pot is pulsed by switching its 3-way valve to align the pulse pot to the supply air manifold. The valve remains in this position for the duration of the pulse time; the 3-way valve then realigns the pulse pot to the vent manifold. The next pulse pot in the firing sequence is then pulsed. During this time, the first pulse pot is venting the compressed air to the vent manifold and will begin filling after the combined pressure and liquid level inside the pulse pot equalizes with the process tank liquid level. The APA system continues to function in this fashion, firing one pulse pot after another according to a pre-determined firing sequence. Some tanks also include steps where all 3-way valves are aligned to vent for the duration of the pulse time. The combination of steps, including both with pulse pots firing and, if required, all pulse pots venting, prevent firing the first in sequence before it has been refilled to its original level. This prevents over-blowing.

A description of a pulse cycle is shown in Figure 3-1 and Figure 3-2. Initially, the pulse pot is on standby and ready to be discharged. The 3-way valve is open to the vent side, which is maintained at 3 ft of water column vacuum. This causes the liquid level inside the pulse pot to be higher than the working level in the process tank.

The initial liquid level inside the pulse pot is denoted by (h). This is referred to as the vacuum lift. The vacuum lift is created by the difference in pressure between the negative vent pressure and the pressure inside the process tank vapor space. The amount of vacuum lift will vary, based on the specific gravity of the liquid inside the process tank. Discharging begins after the 3-way valve is open to the compressed air side. This causes air to enter the pulse pot. The flow of air into the pulse pot causes the air pressure to increase inside the pulse pot. The increasing air pressure causes the liquid to discharge from the pulse pot into the process tank. The vent level

(ℓ) is the liquid level inside the pulse pot that corresponds to the end of the pulse time. At this time, the 3-way valve is opened to the vent side and the air inside the pulse pot begins to depressurize. However, liquid will continue to discharge from the pulse pot until the pressure created by the liquid level in the process tank is equal to the air pressure inside the pulse pot. The lowest liquid level inside the pulse pot is when filling begins; this is denoted in Figure 3-2 as ($\ell\ell$).

A small amount of tank surge takes place during the drive phase of a pulse cycle. Some of this is compensated for by other pulse pots filling up during the same time. There is a negative tank surge whenever a pulse pot is filling.

When the liquid level inside the process tank is below the minimum level necessary to sustain pulsing action using compressed air, the compressed air is isolated from the pulse pots. Vent air from the process tank is used as the supply air source for air entering the pulse pots. This mode of operation is referred to as the lift and drop mode because the vacuum system is used to lift the liquid from the tank into the pulse pot above the tank liquid working level, and the vent air from the tank is used to allow the liquid inside the pulse pot to drop back down in the pulse pot to the working level in the process tank. At a lower tank level, only the center pulse pot is used for the lift and drop mode.

During normal operations, each APA system will fire a single pulse pot in sequence. The BPCS will automatically set the length of each pulse time and control the air supply pressure. The BPCS adjusts the air pressure based on process tank level and adjusts the pulse time based on tank density. Compressed air is vented from each pulse pot to the PMVS vent header through the vent manifold. The vent manifold provides sufficient capacity to limit the superimposed back-pressure seen by the pulse pots.

The process sequences for the APA systems are included in Section 3.0, 4.0, 6.0, and 7.0 in X-PCD-J-00004, *Automation Functional Control Sequence for: Alpha Strike Process* and Section 3.0 in X-PCD-J-00001, *Automation Functional Control Sequence for: Caustic-Side Solvent Extraction*.

Figure 3-1. Start of Pulse Cycle

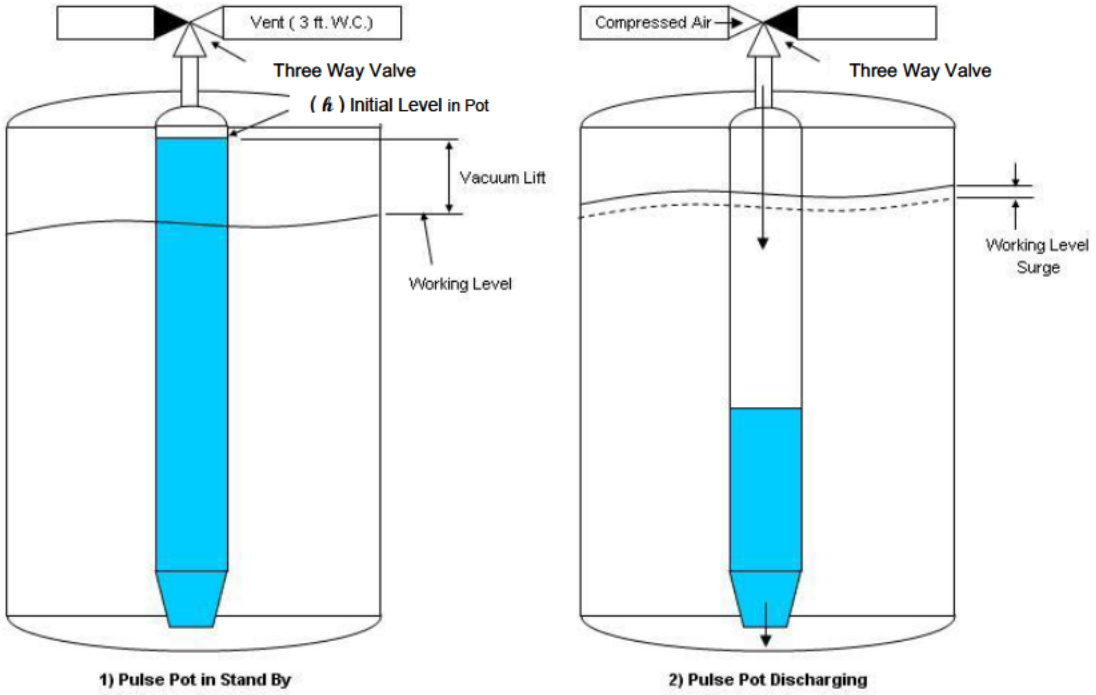

Figure 3-2. End of Pulse Cycle

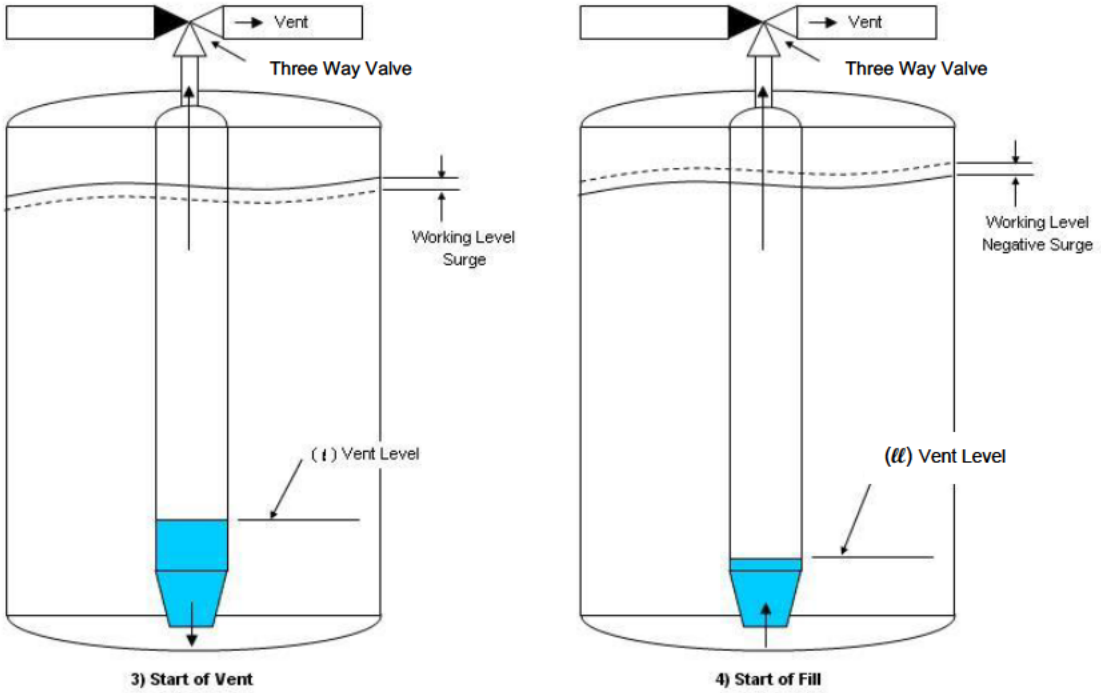

3.4.4 Off-Normal and Recovery Operations

Off-normal operations can be associated with a failure of the 3-way pulse pot valves that supply compressed air to each pulse pot, and also vent the compressed air from each pulse pot to the PMVS header.

If a 3-way control valve should fail, the BPCS will recognize the failure and issue an alarm. The valve will fail in the vent position. During this scenario, the BPCS will move to the next pulse pot in series after the pulse and delay time has elapsed from the failed valve. The system will continue to operate, using the remaining pulse pots. The APA system cannot be operated during flush down and repairs, but may continue to operate until maintenance is scheduled.

The functional classification and performance category of the components are shown in Figure 3-3. The APA pulse pots, nozzles, and air supply piping within the vessels are qualified as Safety Significant/Performance Category 3 (PC-3) and are required to maintain their integrity and remain operable after a seismic event. The 3-way and 2-way valves and supply air piping located in the pulse mixer enclosure are qualified as Safety Significant/PC-3 and are required to maintain their integrity and remain operable after a seismic event. The valve controllers are located outside of the pulse mixer enclosure on the operating deck on an instrument rack, which makes them readily accessible to an operator. The portable air connection, isolation valve, and manual override capability of the valve controllers are qualified to PC-3 requirements to ensure that they are functional after a seismic event. If necessary following a seismic event, the valve controllers can be operated manually on a periodic basis to provide agitation of the process tank contents.

3.4.5 System Shutdown

An APA system can be shut down manually or automatically through the BPCS. A shutdown will isolate the compressed air from the system, using the automatic control valve downstream of the charge tanks. During shutdown, each pulse pot is vented to the PMVS.

Figure 3-3. Typical Seismic Component Designations

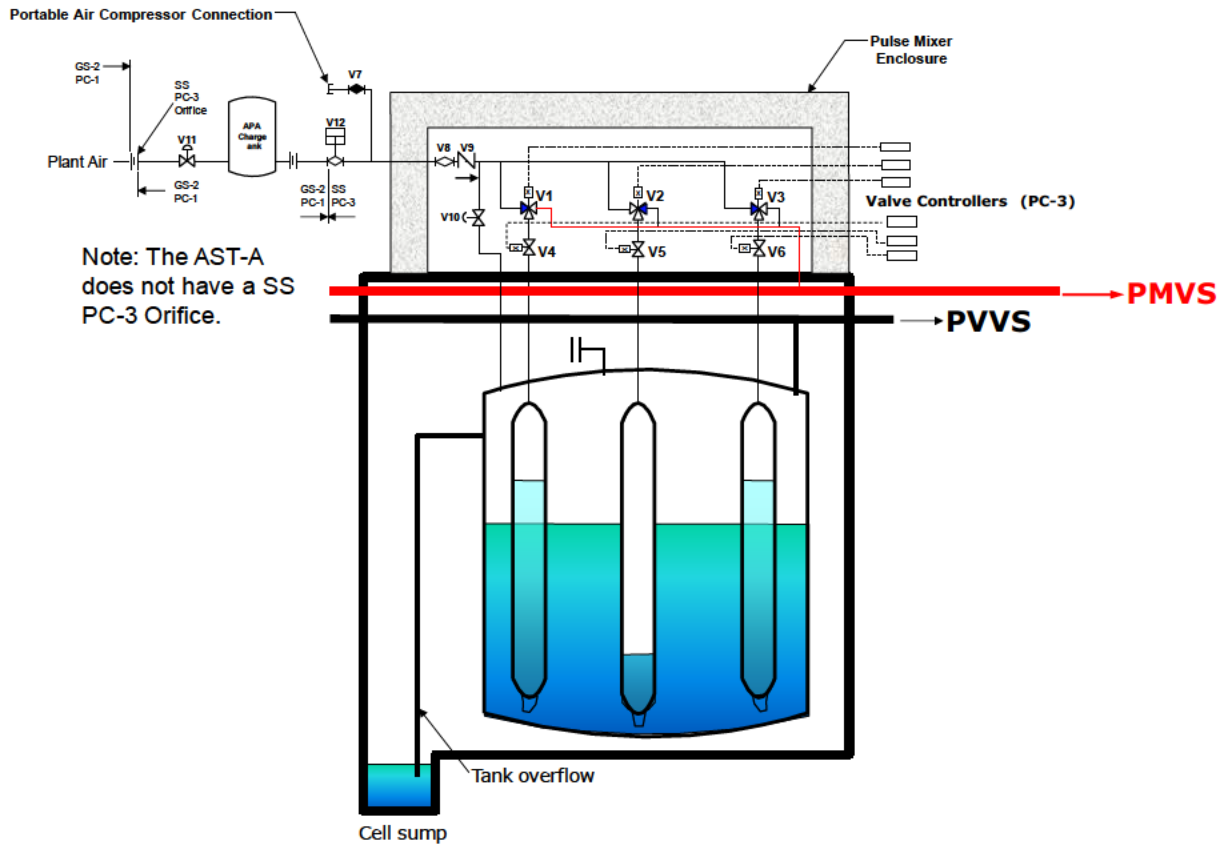

4.0 REFERENCES

[1] J-SD-J-00002, *SWPF Instrumentation and Controls System Description*. Parsons, Aiken, South Carolina.

[2] M-SD-J-00005, *SWPF Utilities System Description*. Parsons, Aiken, South Carolina.

[3] X-SD-J-00001, *SWPF Alpha Strike Process System Description*. Parsons, Aiken, South Carolina.

[4] X-SD-J-00002, *SWPF Caustic-side Solvent Extraction System Description*. Parsons, Aiken, South Carolina.

[5] X-SD-J-00009, *SWPF Caustic-side Solvent Extraction with Next Generation Solvent (NGS) System Description*

[6] S-SAR-J-00002, *SWPF Documented Safety Analysis*. Parsons, Aiken, South Carolina.

[7] P-DB-J-00002, *SWPF Design Criteria Database*. Parsons, Aiken, South Carolina.

[8] *Salt Waste Processing Facility Procedure Manual.* Aiken, South Carolina

[9] P-CDM-J-00001, *Configuration Management Plan.* Parsons, Aiken, South Carolina.

[10] M-M5-J-0001, *SWPF Simplified Process Flow Schematic (U)*. Parsons, Aiken, South Carolina.

[11] M-M6-J-0005, *SWPF Process Building Alpha Sorption Tank-A TK-101 P&ID (U)*. Parsons, Aiken, South Carolina.

[12] M-M6-J-0007, *SWPF Process Building Filter Feed Tank-A TK-102 P&ID (U)*. Parsons, Aiken, South Carolina.

[13] M-M6-J-0014, *SWPF Process Building Sludge Solids Receipt Tank TK-104 P&ID (U)*. Parsons, Aiken, South Carolina.

[14] M-M6-J-0017, *SWPF Process Building Wash Water Hold Tank TK-105 P&ID (U)*. Parsons, Aiken, South Carolina.

[15] M-M6-J-0027 SH1, *SWPF Process Building Pulse Mixer Enclosure A P&ID (U)*. Parsons, Aiken, South Carolina.

[16] M-M6-J-0027 SH2, *SWPF Process Building Pulse Mixer Enclosure A P&ID (U)*. Parsons, Aiken, South Carolina.

[17] M-M6-J-0028 SH1, *SWPF Process Building Pulse Mixer Enclosure B P&ID (U)*. Parsons, Aiken, South Carolina.

[18] M-M6-J-0028 SH2, *SWPF Process Building Pulse Mixer Enclosure B P&ID (U)*. Parsons, Aiken, South Carolina.

[19] M-M6-J-0029, *SWPF Process Building Pulse Mixer Enclosure C P&ID (U)*. Parsons, Aiken, South Carolina.

[20] M-M6-J-0030, *SWPF Process Building Salt Solution Feed Tank TK-109 P&ID (U)*. Parsons, Aiken, South Carolina.

[21] M-M6-J-0092, *SWPF Process Building Plant Air Distribution to Air Pulse Agitators P&ID (U)*. Parsons, Aiken, South Carolina.

[22] M-CLC-J-00090, *SWPF AST-A Pulse Mixer Sizing Calculation*, Revision 2. Parsons, Aiken, South Carolina.

[23] M-CLC-J-00091, *SWPF FFT-A Pulse Mixer Sizing Calculation*, Revision 2. Parsons, Aiken, South Carolina.

[24] M-CLC-J-00092, *SWPF SSRT Pulse Mixer Sizing Calculation*, Revision 2 Parsons, Aiken, South Carolina.

[25] M-CLC-J-00093, *SWPF WWHT Pulse Mixer Sizing Calculation*, Revision 2 Parsons, Aiken, South Carolina.

[26] M-CLC-J-00094, *SWPF SSFT Pulse Mixer Sizing Calculation*, Revision 2. Parsons, Aiken, Carolina.

[27] J-JZ-J-0010, *SWPF LI-1106 AST-A Level*. Parsons, Aiken, South Carolina.

[28] J-JZ-J-00104, *SWPF DI-1106 AST-A Density*. Parsons, Aiken, South Carolina.

[29] J-JZ-J-00106, *SWPF PDI-4480 AST-A Vacuum*. Parsons, Aiken, South Carolina.

[30] J-JZ-J-00850, *SWPF PIC-4483 AST-A APA Charge Tank Pressure*. Parsons, Aiken, South Carolina.

[31] J-JZ-J-0012, *SWPF LI-1108 FFT-A Level*. Parsons, Aiken, South Carolina.

[32] J-JZ-J-00110, *SWPF DI-1108 FFT-A Density*. Parsons, Aiken, South Carolina.

[33] J-JZ-J-00112, *SWPF PDI-4490 FFT-A Vacuum*. Parsons, Aiken, South Carolina.

[34] J-JZ-J-00851, *SWPF PIC-4493 FFT-A APA Charge Tank Pressure*. Parsons, Aiken, South Carolina.

[35] J-JZ-J-0014, *SWPF LI-1274 SSRT Level*. Parsons, Aiken, South Carolina.

[36] J-JZ-J-00157, *SWPF DI-1274 SSRT Density*. Parsons, Aiken, South Carolina.

[37] J-JZ-J-00159, *PDI-4510 SSRT Vacuum*. Parsons, Aiken, South Carolina.

[38] J-JZ-J-00853, *SWPF PIC-4513 SSRT APA Charge Tank Pressure*. Parsons, Aiken, South Carolina.

[39] J-JZ-J-0016, *SWPF LI-1316 WWHT Level*. Parsons, Aiken, South Carolina.

[40] J-JZ-J-00174, *SWPF DI-1316 WWHT Density*. Parsons, Aiken, South Carolina.

[41] J-JZ-J-00176, *SWPF PDI-4500 WWHT Vacuum*. Parsons, Aiken, South Carolina.

[42] J-JZ-J-00852, *SWPF PIC-4503 WWHT APA Chart Tank Pressure*. Parsons, Aiken, South Carolina.

[43] J-JZ-J-0018, *SWPF LI-1390 SSFT Level*. Parsons, Aiken, South Carolina.

[44] J-JZ-J-00198, *SWPF DI-1390 SSFT Density*. Parsons, Aiken, South Carolina.

[45] J-JZ-J-00200, *SWPF PDI-4520 SSFT Vacuum*. Parsons, Aiken, South Carolina.

[46] J-JZ-J-00854, *SWPF PIC-4523 SSFT APA Charge Tank Pressure*. Parsons, Aiken, South Carolina.

[47] J-JZ-J-00197, *SWPF LI-4525 Pulse Mixer Vent Header Drain Loop Seal Level*. Parsons, Aiken, South Carolina.

Appendix A. APA Design Requirements

System Design Criteria	Value				
	AGT-101	AGT-102	AGT-104	AGT-105	AGT-109
Required Number of Pulse Pots	7	7	4	5	7
Compressed Air Supply Pressure (psig)	100	100	100	100	100
Pressure Control Valve Set Pressure Range (psig)	25 - 70	25 - 70	15 - 40	20 - 65	20 - 70
Average Air Usage (scfm)	265	308	113	166	262
Maximum Air Usage (During Pulse Drive) (scfm)	276	321	134	183	276
PMVS Vacuum Pressure (in Water Column)	- 36	- 36	- 36	- 36	- 36
Liquid s.g.	1.22	1.22	1.24	1.22	1.24
Pulse Time (Seconds)	7-8	7-8	7-8	7-8	7-8
Delay Time (Seconds)	0	0	0	0	0
Maximum Pulse Jet Velocity (ft per Second)	27	30	36	36	29
Tank Liquid Volume at Working Level (Gallons)	28,700	31,300	5,200	11,500	41,400

Appendix B. APA System Components Requirements

Component	AGT-101 AST-A APA	AGT-102 FFT-A APA	AGT-104 SSRT APA	AGT-105 WWHT APA	AGT-109 SSFT APA
Pressure Control Valve	PV-4483 2 inch	PV-4493 2 inch	PV-4513 2 inch	PV-4503 2 inch	PV-4523 2 inch
APA Charge Tank / Capacity	TK-128 300 Gallon	TK-129 300 Gallon	TK-131 300 Gallon	TK-133 300 Gallon	TK-132 300 Gallon
Relief Valve	PSV-4482	PSV-4489	PSV-4512	PSV-4505	PSV-4526
Flow Orifice	FO-4481	FO-4485	FO-4486	FO-4501	FO-4521
Restricting Orifice *	Not Applicable (NA)	FO-4491	FO-4511	FO-4506	FO-4516
Nominal Diameter of Pulse Pots	24 in	24 inch	14 inch	16 inch	24 inch
Inside Diameter of Jet Nozzle	4 inch	4 inch	2 inch	2.5 inch	4 inch
* - Orifice serves a Safety Significant function to mitigate overblow consequences.					