X-SD-J-00006
Revision: 2
Date: September 10, 2019

SALT WASTE PROCESSING FACILITY PROJECT

SAMPLING

SYSTEM DESCRIPTION

Prepared, reviewed, and accepted by:

Anthony Edwards **SWPF Responsible Engineer/Cognizant Engineer**	9/10/19 **Date**
Bill Brasel **SWPF Engineering Integration Manager**	9/10/19 **Date**
Dr. Thomas D. Burns, Jr. P.E. **SWPF Director of Engineering**	9/10/19 **Date**

This Document Affected By	
Design Change Document	Initial/Date

SUMMARY OF CHANGES

Revision No.	Date	Description of Change
0	05/20/08	Issued for Enhanced Final Design
1	09/01/15	Revise per DCN-1477. This is a complete rewrite, therefore no revision bars shown.
2	09/10/19	Revise per DCN-1705, DCN-1728, DCN-2022, DCN-7015, DCN-2101, DCN-2197, DCN-2205, and DCN-2212.

TABLE OF CONTENTS

1.0 SCOPE 1

2.0 GENERAL OVERVIEW 2

3.0 SAMPLING USING THE ISOLOK SAMPLERS 6

3.1 System Function 6
3.2 Operational Overview 6
3.3 Configuration Information 6
3.3.1 Description of System 6
3.3.2 Major Components 11
3.3.3 Stream Data 14
3.3.4 Physical Location and Layout 14
3.3.5 System Control Features and Interlocks 18
3.4 Operations 32
3.4.1 Initial Configuration 32
3.4.2 System Start-up 33
3.4.3 Normal Operations 34
3.4.4 Off-Normal and Recovery Operation 37
3.4.5 System Shutdown 39

4.0 SAMPLING USING THE MANUAL SAMPLERS 39

4.1 System Function 39
4.2 Operational Overview 39
4.3 Configuration Information 39
4.3.1 Description of System 39
4.3.2 Major Components 40
4.3.3 Stream Data 40
4.3.4 Physical Location and Layout 40
4.3.5 System Control Features and Interlocks 42
4.4 Operations 42
4.4.1 Initial Configuration 42
4.4.2 System Start-up 42
4.4.3 Normal Operations 42
4.4.4 Off-Normal and Recovery Operation 42
4.4.5 System Shutdown 42

5.0 MISCELLANEOUS 42

6.0 REFERENCES 43

TABLE OF CONTENTS (cont.)

List of Figures

Figure 2-1. Central Processing Area Sample Pump Configuration 3
Figure 2-2. Central Processing Area Spent Acid Storage Tank (TK-127)/Alpha Sorption Drain Tank (ASDT) (TK-601) Slip Stream Configuration 4
Figure 2-3. CSSX Slip Stream Configuration 4
Figure 2-4. Cell Sump Pump Configuration 5
Figure 2-5. AFF Sample Pump Configuration 5

List of Tables

Table 3-1. P&IDs 6
Table 3-2. Major Components 12
Table 3-3. Sampler Monitoring Instrumentation 18
Table 3-4. Sampling Control Loops 28
Table 4-1. P&IDs 39

ACRONYMS AND ABBREVIATIONS

%	Percent
AFDT	Alpha Finishing Drain Tank (TK-228)
AFF	Alpha Finishing Facility
ASDT	Alpha Sorption Drain Tank (TK-601)
ASP	Alpha Strike Process
AST-A	Alpha Sorption Tank-A (TK-101)
AST-B	Alpha Sorption Tank-B (TK-221)
Ba	Barium
BDT	Ba-137 Decay Tank (TK-206)
BPCS	Basic Process Control System
CPA	Central Processing Area
CSDT-A	Cleaning Solution Dump Tank-A (TK-103)
CSDT-B	Cleaning Solution Dump Tank-B (TK-223)
CSSX	Caustic-side Solvent Extraction
DSSHT	Decontaminated Salt Solution Hold Tank (TK-207)
FFT-A	Filter Feed Tank-A (TK-102)
FFT-B	Filter Feed Tank-B (TK-222)
gpm	Gallons per minute
hp	Horsepower
IST	Intermediate Storage Tank (TK-220)
MSTT	Monosodium Titanate/Sludge Transfer Tank (TK-224)
^{o}F	degrees Fahrenheit
P&ID	Piping and Instrumentation Diagram
P&VG	Pump and Valve Gallery
SAST	Spent Acid Storage Tank (TK-127)
SD	System Description
SDT	Solvent Drain Tank (TK-208)
SEHT	Strip Effluent Hold Tank (TK-205)
SHT	Solvent Hold Tank (TK-202)
SQL	**Structured Query Language**
SSFT	Salt Solution Feed Tank (TK-109)
SSRT	Sludge Solids Receipt Tank (TK-104)
SWPF	Salt Waste Processing Facility
VFD	Variable Frequency Drive
WWHT	Wash Water Hold Tank (TK-105)

DEFINITIONS/GLOSSARY

There are no definitions or glossary items for this System Description.

1.0 SCOPE

The Salt Waste Processing Facility (SWPF) sampling system consists of equipment (e.g., pumps, valves) required to recirculate process solution through the laboratory. Laboratory personnel take a grab sample of the recirculating solution. The scope of this System Description (SD) covers operations/methods for recirculating solution through the laboratory to obtain a representative sample. This SD also covers obtaining samples from manual sampling points (e.g., Cold Chemicals Area tanks, low-level drain sump, etc.). Sampling of process solutions is required for a variety of reasons:

- Process operation (i.e., how the plant is running);
- Compliance with Waste Acceptance Criteria;
- Verification of process solution compositions (e.g., solvent composition);
- Verification of cold chemical compositions; and
- Confirmation of online instrumentation readings.

This SD interfaces with components in the following SDs:

- E-SD-J-00002, *SWPF Electrical System Description* (Draft)[1];
- J-SD-J-00002, *SWPF Instrumentation and Controls System Description*[2];
- M-SD-J-00005, *SWPF Utilities System Description* (Draft)[3];
- **M-SD-J-00004, *SWPF Heating, Ventilating, and Air Conditioning System Description*[4];**
- **M-SD-J-00006, *SWPF Material Handling System Description*[5];**
- X-SD-J-00001, *SWPF Alpha Strike Process System Description*[6];
- X-SD-J-00002, *SWPF Caustic-side Solvent Extraction System Description*[7];
- X-SD-J-00003, *SWPF Cold Chemicals Area System Description*[8];
- X-SD-J-00004, *SWPF Alpha Finishing Process System Description*[9]
- X-SD-J-00005, *SWPF Drains System Description*[10]**;**
- **X-SD-J-00008, *SWPF Next Generation Solvent System Description*[11];**
- **X-SD-J-00009, *SWPF Caustic-side Solvent Extraction with Next Generation Solvent (NGS) System Description*[12]**

The safety analysis requirements related to system functions for this system are documented in Chapter 4 of S-SAR-J-0000**2**, *SWPF Documented Safety Analysis*[13].

The safety analysis requirements related to operability for this system are documented in Chapter 5 of S-SAR-J-0000**2**[13].

The discrete project design requirements for this system are documented in P-DB-J-00002, *SWPF Design Criteria Database*[14].

As part of the maintenance of the SWPF Master Equipment List (see PP-EN-5042, *Master Equipment List*)[15], all permanent plant equipment is assigned a unique tag number. Each component (equipment, instrumentation, specialty item, etc.) is assigned to one (and only one) CSE system code. Structured Query Language (SQL) reports are generated (real time) off the controlled Master Equipment List. These are filterable by CSE system. A complete listing of all components associated with this system can be found using the following reports, and filtering by LAB:

- **MEL Cables**
- **MEL Equipment**
- **MEL Instruments**
- **MEL Lines**
- **MEL Manual Valves**
- **MEL Specialty Items**

Similarly, all essential and support drawing are coded to the appropriate CSE system code (with only one code allowed per drawing). Using the following link: Drawing Category Status, a report may be generated for LAB and selecting the drawing type (Essential, Support). Reference drawings are not assigned System Codes and not required to be maintained current with facility modifications per PP-EN-5001[15] and P-CDM-J-00001, *Configuration Management Plan*[16].

2.0 GENERAL OVERVIEW

Several general configurations are used to sample process solutions using the Isolok samplers. Figure 2-1 through Figure 2-5 show typical sampling configurations.

- Figure 2-1 provides a general schematic, which uses a dedicated sample pump to sample Central Processing Area (CPA) process vessels. This set-up is typical for vessels in the CPA cells.
- Figure 2-2 is the general schematic for tanks in the drain cell. This uses a slip-stream off the recirculation flow to direct flow to the laboratory samplers.
- Figure 2-3 shows the general schematic for the Caustic-side Solvent Extraction (CSSX) System. This uses a slip-stream off the main process flow to send solution to the laboratory samplers.
- Figure 2-4 is the general schematic for sending solution to the laboratory from the cell sumps.

- Figure 2-5 shows a general schematic for a dedicated sample pump to sample Alpha Finishing Facility (AFF) process vessels. This set-up is similar to the dedicated sample pumps used in the CPA. However, extensive shielding is not expected for samples from the AFF.

Figure 2-1. Central Processing Area Sample Pump Configuration

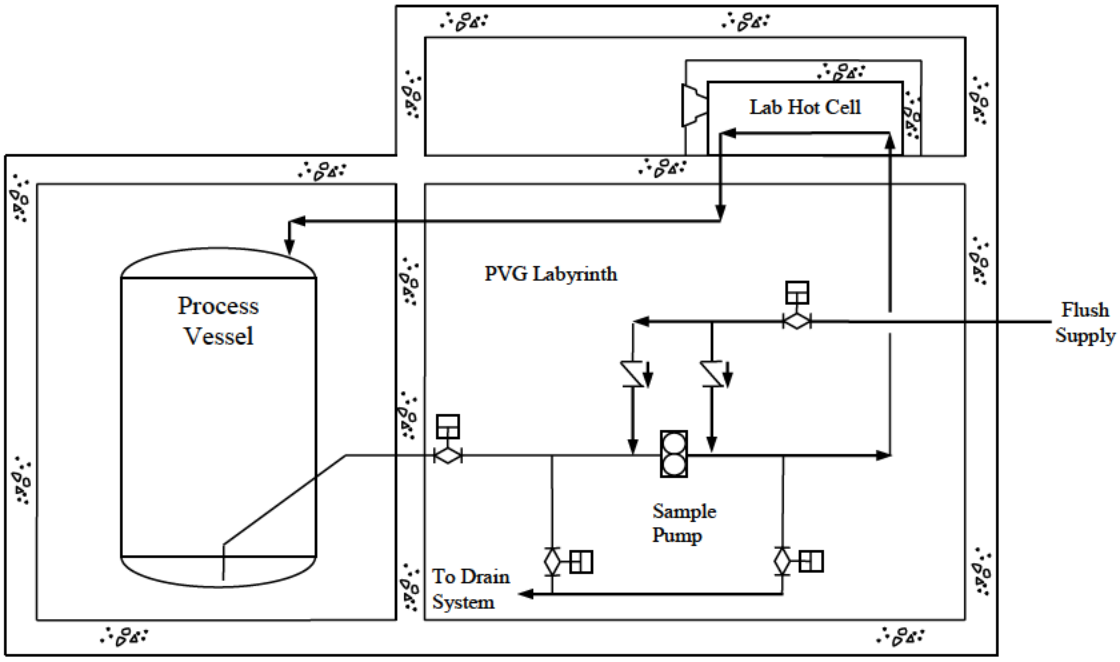

Figure 2-2. Central Processing Area Spent Acid Storage Tank (TK-127)/Alpha Sorption Drain Tank (ASDT) (TK-601) Slip Stream Configuration

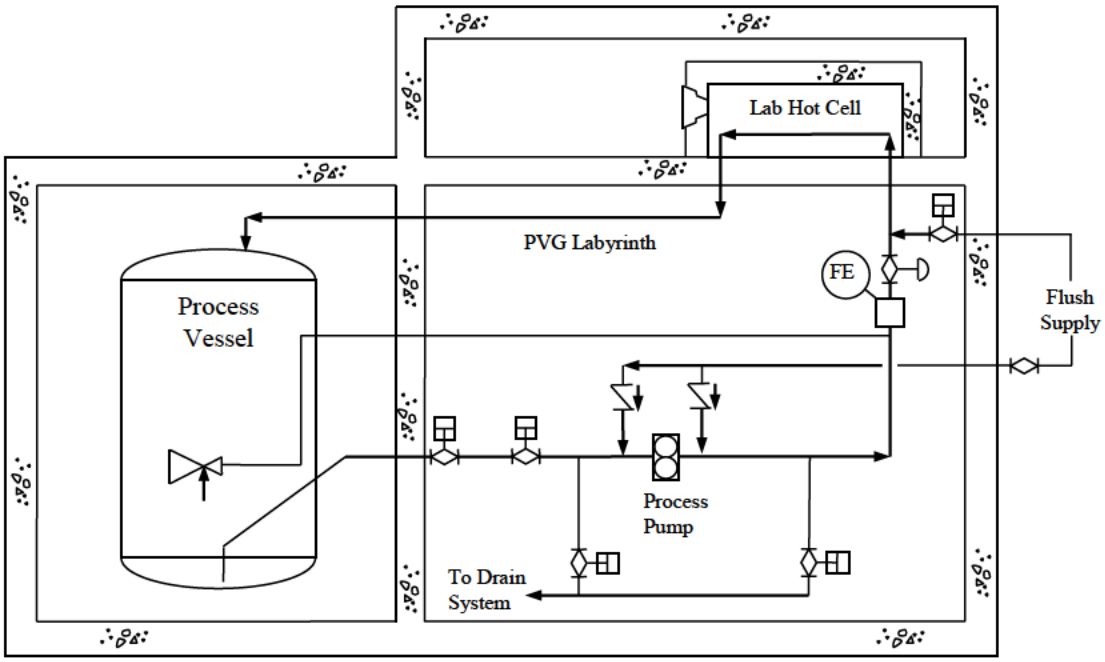

Figure 2-3. CSSX Slip Stream Configuration

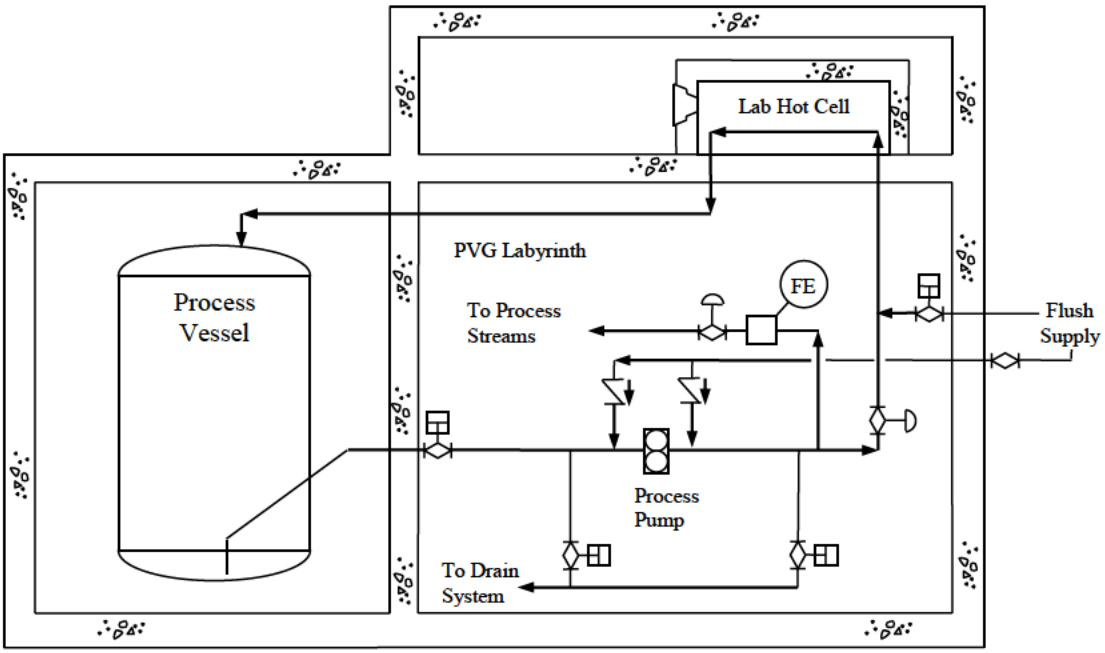

Figure 2-4. Cell Sump Pump Configuration

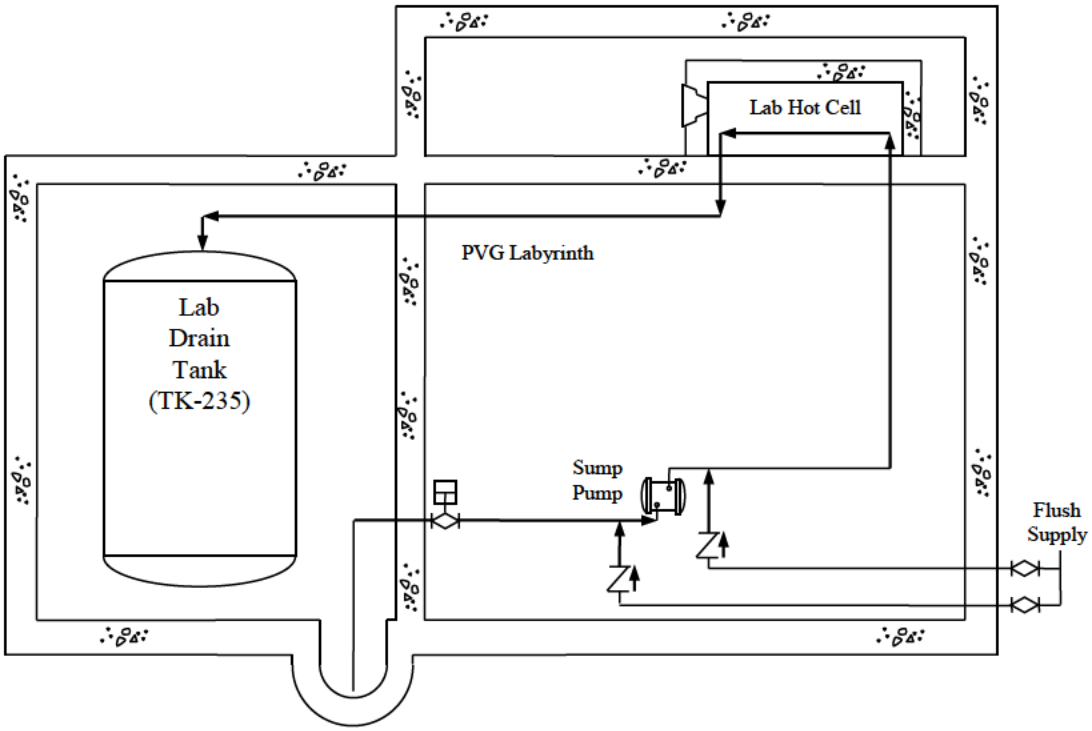

Figure 2-5. AFF Sample Pump Configuration

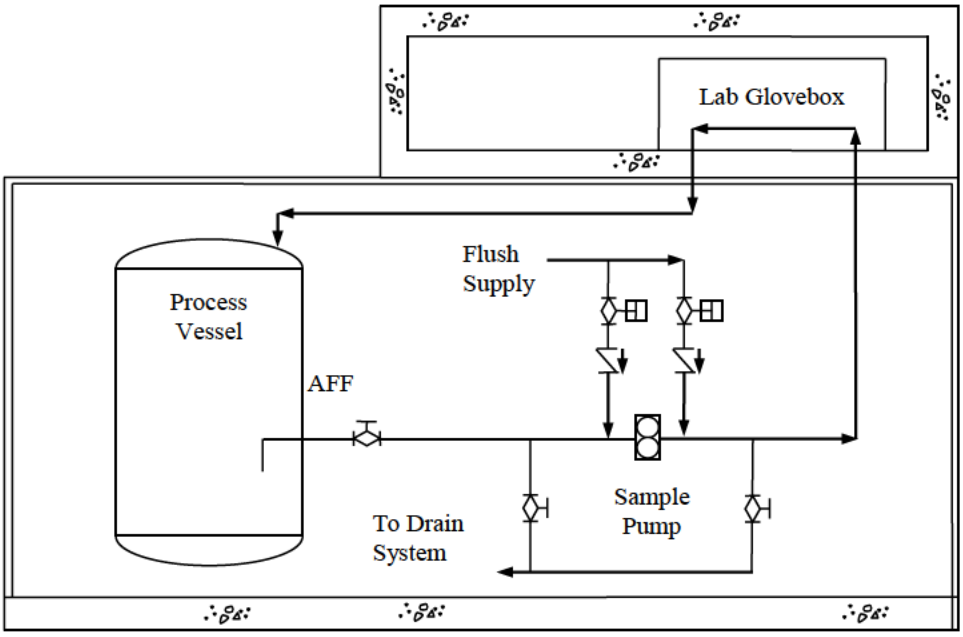

In addition, there are manual samplers that are used to sample cold chemicals. These sample valves are used to pull a sample from a storage tank, from a tank recirculation line, or a chemical feed line.

3.0 SAMPLING USING THE ISOLOK SAMPLERS

3.1 System Function

The main system function is to provide a representative sample to the laboratory sampler (in accordance with P-FDD-J-00001, *SWPF Analytical Laboratory Design Requirements*[17]. This is accomplished by the ability to:

- Provide process fluid to the sampling device in the laboratory,
- Recirculate solution through the sample loop before pulling a sample,
- Maintain solids in suspension during transfer when sampling slurries,
- Flush the sample loop after sample collection, and
- Drain and flush the sample loop.

3.2 Operational Overview

The purpose of the sampling system is to provide process solution from the process vessels or sumps to the laboratory samplers. The process solution is then collected and analyzed by laboratory personnel. To sample a vessel or sump, solution is circulated from the process vessel or sump to a sampler in a laboratory hot cell or glovebox, and then typically returned to its respective tank. After a set minimum recirculation period, a grab sample is withdrawn from the recirculating solution.

3.3 Configuration Information

3.3.1 Description of System

Refer to the Piping and Instrumentation Diagrams (P&IDs) listed in Table 3-1.

Table 3-1. P&IDs

Alpha Sorption Tank-A (AST-A) (TK-101) and Strip Effluent Hold Tank (SEHT) (TK-205) Samplers

Diagram Number	Diagram Title
M-M6-J-0005	*SWPF Process Building Alpha Sorption Tank-A TK-101 P&ID (U)*[18]
M-M6-J-0102	*SWPF Process Building Lab Hot Cell #1 TK-101 and TK-205 Samplers P&ID (U)*[19]
M-M6-J-0143	*SWPF Process Building Process Sampler Detail P&ID (U)*[20]
M-M6-J-0151	*SWPF Process Building Sample Pumps SP-101, SP-109 and SP-205 P&ID (U)*[21]
M-M6-J-0160	*SWPF Process Building ASP and CSSX North Flush Header P&ID (U)*[22]

Table 3-1. P&IDs (cont.)

Filter Feed Tank-A (FFT-A) (TK-102) Samplers

Diagram Number	Diagram Title
M-M6-J-0007	*SWPF Process Building Filter Feed Tank-A TK-102 P&ID (U)*[23]
M-M6-J-0103	*SWPF Process Building Lab Hot Cell #1 TK-104 and TK-102 Samplers P&ID (U)*[24]
M-M6-J-0152	*SWPF Process Building Sample Pumps SP-102, SP-103 and SP-235 P&ID (U)*[25]
M-M6-J-0160	*SWPF Process Building ASP and CSSX North Flush Header P&ID (U)*[22]

Cleaning Solution Dump Tank–A (CSDT-A) (TK-103) Samplers

Diagram Number	Diagram Title
M-M6-J-0019	*SWPF Process Building Cleaning Solution Dump Tank-A TK-103 P&ID (U)*[26]
M-M6-J-0107	*SWPF Process Building Lab Hot Cell #2 TK-103 and Process Cell Sumps Samplers P&ID (U)*[27]
M-M6-J-0152	*SWPF Process Building Sample Pumps SP-102, SP-103 and SP-235 P&ID (U)*[25]
M-M6-J-0160	*SWPF Process Building ASP and CSSX North Flush Header P&ID (U)*[22]

Sludge Solids Receipt Tank (SSRT) (TK-104) Samplers

Diagram Number	Diagram Title
M-M6-J-0014	*SWPF Process Building Sludge Solids Receipt Tank TK-104 P&ID (U)*[28]
M-M6-J-0103	*SWPF Process Building Lab Hot Cell #1 TK-104 and TK-102 Samplers P&ID (U)*[24]
M-M6-J-0153	*SWPF Process Building Sample Pumps SP-104 and SP-105 P&ID (U)*[29]
M-M6-J-0160	*SWPF Process Building ASP and CSSX North Flush Header P&ID (U)*[22]

Wash Water Hold Tank (WWHT) (TK-105) Samplers

Diagram Number	Diagram Title
M-M6-J-0017	*SWPF Process Building Wash Water Hold Tank TK-105 P&ID (U)*[30]
M-M6-J-0105	*SWPF Process Building Lab Hot Cell #1 TK-105 Sampler P&ID (U)*[31]
M-M6-J-0153	*SWPF Process Building Sample Pumps SP-104 and SP-105 P&ID (U)*[29]
M-M6-J-0160	*SWPF Process Building ASP and CSSX North Flush Header P&ID (U)*[22]

Salt Solution Feed Tank (SSFT) (TK-109) Samplers

Diagram Number	Diagram Title
M-M6-J-0030	*SWPF Process Building Salt Solution Feed Tank TK-109 P&ID (U)*[32]
M-M6-J-0032	*SWPF Process Building Strip Effluent Hold Tank TK-205 P&ID (U)*[33]
M-M6-J-0104	*SWPF Process Building Lab Hot Cell #1 TK-601 and TK-109 Samplers P&ID (U)*[34]
M-M6-J-0151	*SWPF Process Building Sample Pumps SP-101, SP-109 and SP-205 P&ID (U)*[21]
M-M6-J-0160	*SWPF Process Building ASP and CSSX North Flush Header P&ID (U)*[22]

Table 3-1. P&IDs (cont.)

Lab Drain Tank (TK-235) Samplers

Diagram Number	Diagram Title
M-M6-J-0113	*SWPF Process Building Lab Drain Tank TK-235 P&ID (U)*[35]
M-M6-J-0108	*SWPF Process Building Lab Hot Cell #2 TK-127, SMP-206 and TK-235 Samplers P&ID (U)*[36]
M-M6-J-0152	*SWPF Process Building Sample Pumps SP-102, SP-103 and SP-235 P&ID (U)*[25]

Decontaminated Salt Solution Hold Tank (DSSHT) (TK-207) Samplers

Diagram Number	Diagram Title
M-M6-J-0048 SH1	*SWPF Alpha Finishing Facility DSS Hold Tank TK-207 P&ID (U)*[37]
M-M6-J-0110	*SWPF Process Building Lab Glovebox #8 TK-207, TK-220, and TK-221 Samplers P&ID (U)*[38]
M-M6-J-0149	***SWPF Alpha Finishing Facility Recovered Solvent Filters P&ID (U)***[39]
M-M6-J-0154	*SWPF Alpha Finishing Facility Sample Pumps SP-207, SP-220, SP-221 P&ID (U)*[40]

Intermediate Storage Tank (IST) (TK-220) Samplers

Diagram Number	Diagram Title
M-M6-J-0049 SH1	*SWPF Alpha Finishing Facility Intermediate Storage Tank TK-220 P&ID (U)*[41]
M-M6-J-0110	*SWPF Process Building Lab Glovebox #8 TK-207, TK-220, and TK-221 Samplers P&ID (U)*[38]
M-M6-J-0149	***SWPF Alpha Finishing Facility Recovered Solvent Filters P&ID (U)***[39]
M-M6-J-0154	*SWPF Alpha Finishing Facility Sample Pumps SP-207, SP-220, SP-221 P&ID (U)*[40]

Alpha Sorption Tank-B (AST-B) (TK-221) Samplers

Diagram Number	Diagram Title
M-M6-J-0050 SH1	*SWPF Alpha Finishing Facility Alpha Sorption Tank-B TK-221 P&ID (U)*[42]
M-M6-J-0110	*SWPF Process Building Lab Glovebox #8 TK-207, TK-220, and TK-221 Samplers P&ID (U)*[38]
M-M6-J-0149	***SWPF Alpha Finishing Facility Recovered Solvent Filters P&ID (U)***[39]
M-M6-J-0154	*SWPF Alpha Finishing Facility Sample Pumps SP-207, SP-220, SP-221 P&ID (U)*[40]

Filter Feed Tank-B (FFT-B) (TK-222) Samplers

Diagram Number	Diagram Title
M-M6-J-0051 SH1	*SWPF Alpha Finishing Facility Filter Feed Tank-B TK-222 P&ID (U)*[43]
M-M6-J-0111	*SWPF Process Building Lab Glovebox #9 TK-222 and TK-223 Samplers P&ID (U)*[44]
M-M6-J-0149	***SWPF Alpha Finishing Facility Recovered Solvent Filters P&ID (U)***[39]
M-M6-J-0155	*SWPF Alpha Finishing Facility Sample Pumps SP-222, SP-223, SP-224 P&ID (U)*[45]

Table 3-1. P&IDs (cont.)

Cleaning Solution Dump Tank-B (CSDT-B) (TK-223) Samplers

Diagram Number	Diagram Title
M-M6-J-0055 SH2	*SWPF Alpha Finishing Facility Cleaning Solution Dump Tank-B TK-223 P&ID (U)*[46]
M-M6-J-0111	*SWPF Process Building Lab Glovebox #9 TK-222 and TK-223 Samplers P&ID (U)*[44]
M-M6-J-0155	*SWPF Alpha Finishing Facility Sample Pumps SP-222, SP-223, SP-224 P&ID (U)*[45]

Monosodium Titanate/Sludge Transfer Tank (MSTT) (TK-224) Samplers

Diagram Number	Diagram Title
M-M6-J-0056 SH1	*SWPF Alpha Finishing Facility MST/Sludge Transfer Tank TK-224 P&ID (U)*[47]
M-M6-J-0112	*SWPF Process Building Lab Glovebox #9 TK-224 and TK-228 Samplers P&ID (U)*[48]
M-M6-J-0155	*SWPF Alpha Finishing Facility Sample Pumps SP-222, SP-223, SP-224 P&ID (U)*[45]

ASDT (TK-601) Samplers

Diagram Number	Diagram Title
M-M6-J-0061	*SWPF Process Building Alpha Sorption Drain Tank TK-601 P&ID (U)*[49]
M-M6-J-0062 SH1	*SWPF Process Building Alpha Sorption Drain Tank Transfer Pumps P-601A/B P&ID (U)*[50]
M-M6-J-0062 SH2	*SWPF Process Building Alpha Sorption Drain Tank Transfer Pumps P-601A/B Piping P&ID (U)*[51]
M-M6-J-0104	*SWPF Process Building Lab Hot Cell #1 TK-601 and TK-109 Samplers P&ID (U)*[34]
M-M6-J-0160	*SWPF Process Building ASP and CSSX North Flush Header P&ID (U)*[22]

Spent Acid Storage Tank (SAST) (TK-127) Samplers

Diagram Number	Diagram Title
M-M6-J-0062 SH1	*SWPF Process Building Alpha Sorption Drain Tank Transfer Pumps P-601A/B P&ID (U)*[50]
M-M6-J-0062 SH2	*SWPF Process Building Alpha Sorption Drain Tank Transfer Pumps P-601A/B Piping P&ID (U)*[51]
M-M6-J-0108	***SWPF Process Building Lab Hot Cell #2 TK-127, SMP-206 and TK-235 Samplers P&ID (U)***[36]
M-M6-J-0115	*SWPF Process Building Spent Acid Storage Tank TK-127 P&ID (U)*[52]

Solvent Hold Tank (SHT) (TK-202) Samplers

Diagram Number	Diagram Title
M-M6-J-0046 SH1	*SWPF Process Building Solvent Hold Tank TK-202 P&ID (U)*[53]
M-M6-J-0046 SH2	*SWPF Process Building Solvent Feed Pumps P-202A/B P&ID (U)*[54]
M-M6-J-0109	*SWPF Process Building Lab Hot Cell #2 TK-202 and TK-208 Samplers P&ID (U)*[55]

Table 3-1. P&IDs (cont.)

Barium (Ba)-137 Decay Tank (BDT) (TK-206) Samplers

Diagram Number	Diagram Title
M-M6-J-0047 SH2	*SWPF Process Building Ba-137 Decay Tank TK-206 P&ID (U)*[56]
M-M6-J-0047 SH3	*SWPF Process Building Ba-137 Decay Tank Pumps P-206A/B P&ID (U)*[57]
M-M6-J-0106	*SWPF Process Building Lab Hot Cell #2 TK-204 and TK-206 Samplers P&ID (U)*[58]

Caustic Wash Tank (TK-204) Samplers

Diagram Number	Diagram Title
M-M6-J-0043 SH2	*SWPF Process Building Caustic Wash Tank TK-204 P&ID (U)*[59]
M-M6-J-0043 SH3	*SWPF Process Building Caustic Wash Pumps P-204A/B P&ID (U)*[60]
M-M6-J-0106	*SWPF Process Building Lab Hot Cell #2 TK-204 and TK-206 Samplers P&ID (U)*[58]

Solvent Drain Tank (SDT) (TK-208) Samplers

Diagram Number	Diagram Title
M-M6-J-0109	*SWPF Process Building Lab Hot Cell #2 TK-202 and TK-208 Samplers P&ID (U)*[55]
M-M6-J-0120	*SWPF Process Building Solvent Drain Tank TK-208 P&ID (U)*[61]
M-M6-J-0121 SH1	*SWPF Process Building Solvent Drain Tank Pumps P-208A/B P&ID (U)*[62]
M-M6-J-0121 SH2	*SWPF Process Building Solvent Drain Tank Pumps P-208A/B Piping P&ID (U)*[63]
M-M6-J-0160	*SWPF Process Building ASP and CSSX North Flush Header P&ID (U)*[22]

Strip Effluent Pump Tank (TK-215) Samplers

Diagram Number	Diagram Title
M-M6-J-0101	*SWPF Process Building Lab Hot Cell #1 TK-215 and TK-217 Samplers P&ID (U)*[64]
M-M6-J-0122 SH2	*SWPF Process Building Strip Effluent Pump Tank TK-215 P&ID (U)*[65]
M-M6-J-0123	*SWPF Process Building Strip Effluent Pump Tank Pumps P-215A/B P&ID (U)*[66]

Solvent Strip Feed Tank (TK-217) Samplers

Diagram Number	Diagram Title
M-M6-J-0060 SH1	*SWPF Process Building Solvent Strip Feed Tank TK-217 P&ID (U)*[67]
M-M6-J-0060 SH2	*SWPF Process Building Solvent Strip Feed Tank Pumps P-217A/B P&ID (U)*[68]
M-M6-J-0101	*SWPF Process Building Lab Hot Cell #1 TK-215 and TK-217 Samplers P&ID (U)*[64]

Alpha Finishing Drain Tank (AFDT) (TK-228) Samplers

Diagram Number	Diagram Title
M-M6-J-0063	*SWPF Alpha Finishing Facility Alpha Finishing Drain Tank TK-228 P&ID (U)*[69]
M-M6-J-0112	*SWPF Process Building Lab Glovebox #9 TK-224 and TK-228 Samplers P&ID (U)*[48]

Table 3-1. P&IDs (cont.)

CSSX Tank Cell Sump (SMP-206 and SMP-217) Samplers

Diagram Number	Diagram Title
M-M6-J-0126	*SWPF Process Building West CSSX Tank Cell Sump P&ID (U)*[70]
M-M6-J-0108	*SWPF Process Building Lab Hot Cell #2 TK-127, SMP-206 and TK-235 Samplers P&ID (U)*[36]
M-M6-J-0150	*SWPF Process Building East CSSX Tank Cell Sump P&ID (U)*[71]

Alpha Strike Process (ASP) Tank Cell Sumps (SMP-101, SMP-102, SMP-104, SMP-109, SMP-205, and SMP-601) Samplers

Diagram Number	Diagram Title
M-M6-J-0020 SH3	*SWPF Process Building ASP Sump Transfer Pump P-110 P&ID (U)*[72]
M-M6-J-0107	*SWPF Process Building Lab Hot Cell #2 TK-103 and Process Cell Sumps Samplers P&ID (U)*[27]

3.3.2 Major Components

See Table 3-2 for a list of major components.

Table 3-2. Major Components

Component	Description
AST-A Sample Pump (SP-101)	Positive displacement pump with variable frequency drive (VFD) providing a controlled feed to the sampler in the laboratory. Capacity: 4 gallons per minute (gpm) Horsepower (hp): 2.0
FFT-A Sample Pump (SP-102)	Positive displacement pump with VFD providing a controlled feed to the sampler in the laboratory. Capacity: 3.7 gpm[A] hp: 1.5
CSDT-A Sample Pump (SP-103)	Positive displacement pump with VFD providing a controlled feed to the sampler in the laboratory. Capacity: 4 gpm hp: 1.5
SSRT Sample Pump (SP-104)	Positive displacement pump with VFD providing a controlled feed to the sampler in the laboratory. Capacity: 11 gpm hp: 3.0
SEHT Sample Pump (SP-205)	Positive displacement pump with VFD providing a controlled feed to the sampler in the laboratory and tank heel pump down. Capacity: 3 gpm hp: 1.5
WWHT Sample Pump (SP-105)	Positive displacement pump with VFD providing a controlled feed to the sampler in the laboratory. Capacity: 3 gpm hp: 1.5
SSFT Sample Pump (SP-109)	Positive displacement pump with VFD providing a controlled feed to the sampler in the laboratory. Capacity: 3 gpm hp: 1.5
Lab Drain Tank Sample Pump (SP-235)	Positive displacement pump VFD providing a controlled feed to the sampler in the laboratory. Capacity: 4 gpm hp: 1.5
DSSHT Sample Pump (SP-207)	Positive displacement pump with VFD providing a controlled feed to the sampler in the laboratory and tank heel pump down. Capacity: 25 gpm hp: 7.5

[A] **Based on nominal physical properties**

Table 3-2. Major Components(cont.)

Component	Description
IST Sample Pump (SP-220)	Positive displacement pump with VFD providing a controlled feed to the sampler in the laboratory and tank heel pump down. Capacity: 25 gpm hp: 7.5
AST-B Sample Pump (SP-221)	Positive displacement pump with VFD providing a controlled feed to the sampler in the laboratory and tank heel pump down. Capacity: 25 gpm hp: 7.5
FFT-B Sample Pump (SP-222)	Positive displacement pump with VFD providing a controlled feed to the sampler in the laboratory and tank heel pump down. Capacity: 25 gpm hp: 7.5
CSDT-B Sample Pump (SP-223)	Positive displacement pump with VFD providing a controlled feed to the sampler in the laboratory. Capacity: 4 gpm hp: 1.5
MSTT Sample Pump (SP-224)	Positive displacement pump with VFD providing a controlled feed to the sampler in the laboratory. Capacity: 3.55 gpm[A] hp: 1.5
ASDT Transfer Pumps (P-601A/B)	See X-SD-J-00005[10]
Solvent Feed Pumps (P-202A/B)	See X-SD-J-00002[7] **and X-SD-J-00009**[12]
Solvent Adjustment Heat Exchanger (HX-250)	See X-SD-J-00002[7] **and X-SD-J-00009**[12]
Solvent Adjustment Filter (FLT-250)	See X-SD-J-00002[7] **and X-SD-J-00009**[12]
BDT Pumps (P-206A/B)	See X-SD-J-00002[7]
Caustic Wash Tank Pumps (P-204A/B)	See X-SD-J-00002[7] **and X-SD-J-00009**[12]
SDT Pumps (P-208A/B)	See **X-SD-J-00005**[10]
Strip Effluent Pump Tank Pumps (P-215A/B)	See X-SD-J-00002[7] **and X-SD-J-00009**[12]
Solvent Strip Feed Tank Pumps (P-217A/B)	See X-SD-J-00002[7] **and X-SD-J-00009**[12]

Table 3-2. Major Components(cont.)

Component	Description
AFDT Transfer Pump (P-228)	See X-SD-J-00005[10]
CSSX Tank Cell Sump Transfer Pump (P-218)	See X-SD-J-00005[10]
ASP Sump Transfer Pump (P-110)	See X-SD-J-00005[10]
Recovered Solvent Bag Filter (FLT-240)	**Filter used during tank deinventory.** **Rating: 10 micron**
Recovered Solvent Cartridge Filter A (FLT-241)	**Filter used during tank deinventory.** **Rating: 1 Micron**
Recovered Solvent Cartridge Filter B (FLT-242)	**Filter used during tank deinventory.** **Rating: 0.5 micron**

3.3.3 Stream Data

Refer to X-SD-J-00001[6], X-SD-J-00002[7], X-SD-J-00003[8], X-SD-J-00004[9], X-SD-J-00005[10], **and X-SD-J-00009**[12] for stream information related to the Isolok samplers.

3.3.4 Physical Location and Layout

AST-A Sample Pump (SP-101)

The AST-A sample pump and valves are located in the Sample Pump and Valve Gallery (P&VG) Labyrinth. Solution is drawn by the pump from the AST-A (TK-101) and pumped up through a sampler located in Lab Hot Cell #1 (HC-001). An actuated flush valve on the suction side of the pump is used to flush the pump suction and recirculation line following sampling. A manual flush valve is located on the pump discharge. This allows the discharge piping to be flushed if the pump fails. Drains located on both the suction and discharge lines of the pump are directed to the ASDT (TK-601). The piping is arranged for the system to drain back to AST-A (TK-101) or through the drain valves in the P&VG Labyrinth.

FFT-A Sample Pump (SP-102)

The FFT-A sample pump and valves are located in the Sample P&VG Labyrinth. Solution is drawn by the pump from the FFT-A (TK-102) and pumped up through a sampler located in Lab Hot Cell #1 (HC-001). An actuated flush valve on the suction side of the pump is used to flush the pump suction and recirculation line following sampling. A manual flush valve is located on the pump discharge. This allows the discharge piping to be flushed if the pump fails. Drains located on both the suction and discharge lines of the pump are directed to the ASDT (TK-601). The piping is arranged for the system to drain back to FFT-A (TK-102) or through the drain valves in the P&VG Labyrinth.

CSDT-A Sample Pump (SP-103)

The CSDT-A sample pump and valves are located in the Sample P&VG Labyrinth. Solution is drawn by the pump from the CSDT-A (TK-103) and pumped up through a sampler located in Lab Hot Cell #2 (HC-002). An actuated flush valve on the suction side of the pump is used to flush the pump suction and recirculation line following sampling. A manual flush valve is located on the pump discharge. This allows the discharge piping to be flushed if the pump fails. Drains located on both the suction and discharge lines of the pump are directed to the ASDT (TK-601). The piping is arranged for the system to drain back to the CSDT-A (TK-103) or through the drain valves in the P&VG Labyrinth.

SSRT Sample Pump (SP-104)

The SSRT sample pump and valves are located in the Sample P&VG Labyrinth. Solution is drawn by the pump from the SSRT (TK-104) and pumped up through a sampler located in Lab Hot Cell #1 (HC-001). An actuated flush valve on the suction side of the pump is used to flush the pump suction and recirculation line following sampling. A manual flush valve is located on the pump discharge. This allows the discharge piping to be flushed if the pump fails. Drains located on both the suction and discharge lines of the pump are directed to the ASDT (TK-601). The piping is arranged for the system to drain back to the SSRT (TK-104) or through the drain valves in the P&VG Labyrinth.

WWHT Sample Pump (SP-105)

The WWHT sample pump and valves are located in the Sample P&VG Labyrinth. Solution is drawn by the pump from the WWHT (TK-105) and pumped up through a sampler located in Lab Hot Cell #1 (HC-001). An actuated flush valve on the suction side of the pump is used to flush the pump suction and recirculation line following sampling. A manual flush valve is located on the pump discharge. This allows the discharge piping to be flushed if the pump fails. Drains located on both the suction and discharge lines of the pump are directed to the ASDT (TK-601). The piping is arranged for the system to drain back to the WWHT (TK-105) or through the drain valves in the P&VG Labyrinth.

SSFT Sample Pump (SP-109)

The SSFT sample pump and valves are located in the Sample P&VG Labyrinth. Solution is drawn by the pump from the SSFT (TK-109) and pumped up through a sampler located in Lab Hot Cell #1 (HC-001). An actuated flush valve on the suction side of the pump is used to flush the pump suction and recirculation line following sampling. A manual flush valve is located on the pump discharge. This allows the discharge piping to be flushed if the pump fails. Drains located on both the suction and discharge lines of the pump are directed to the ASDT (TK-601). The piping is arranged for the system to drain back to the SSFT (TK-109) or through the drain valves in the P&VG Labyrinth.

SEHT Sample Pump (SP-205)

The SEHT sample pump and valves are located in the Sample P&VG Labyrinth. Solution is drawn by the pump from the SEHT (TK-205) and pumped up through a sampler located in Lab Hot Cell #1 (HC-001). In addition, there is an alternate suction for the sample pump near the low point of the SEHT (TK-205) and an alternate discharge route to the SDT (TK-208) to de-inventory the tank. An actuated flush valve on the suction side of the pump is used to flush the pump suction and recirculation line following sampling. A manual flush valve is located on the pump discharge. This allows the discharge piping to be flushed if the pump fails. Drains located on both the suction and discharge lines of the pump are directed to the SDT (TK-208). The piping is arranged for the system to drain back to the SEHT (TK-205) or through the drain valves in the P&VG Labyrinth. The SEHT sample pump can be used to route the strip effluent to the contactors (EXT-203P) and also can be used to de-inventory the SEHT (TK-205) via the Waste Transfer Enclosure.

Lab Drain Tank Sample Pump (SP-235)

The Lab Drain Tank sample pump and valves are located in the Sample P&VG Labyrinth. Solution is drawn by the pump from the Lab Drain Tank (TK-235) and pumped up through a sampler located in Lab Hot Cell #2 (HC-002). In addition, there are alternate discharge routes to the ASDT (TK-601), the SDT (TK-208), and to the drum-off station. An actuated flush valve on the suction side of the pump is used to flush the pump suction and recirculation line following sampling. A manual flush valve is located on the pump discharge. This allows the discharge piping to be flushed if the pump fails. Drains located on both the suction and discharge lines of the pump are directed to the SDT (TK-208). The piping is arranged for the system to drain through the drain valves in the P&VG Labyrinth.

DSSHT Sample Pump (SP-207)

The DSSHT sample pump and valves are located in the DSSHT/FFT-B Diked Area in the AFF. Solution is drawn by the pump from the DSSHT (TK-207) discharge piping and pumped up through a sampler located in Lab Glovebox #8 (GB-008). In addition, there is an alternate discharge route to the AFF tank heel pump down filter FLT-240 to de-inventory the tank. There are actuated flush valves on the suction and discharge sides of the pump. Drains located on both the suction and discharge lines of the pump are directed to the AFDT (TK-228). The piping is arranged for the system to drain back to the DSSHT (TK-207) or through the drain valves.

IST Sample Pump (SP-220)

The IST sample pump and valves are located in the IST/AST-B Diked Area in the AFF. Solution is drawn by the pump from the IST (TK-220) discharge piping and pumped up through a sampler located in Lab Glovebox #8 (GB-008). In addition, there is an alternate discharge route to the AFF tank heel pump down filter FLT-240 to de-inventory the tank. There are actuated flush valves on the suction and discharge sides of the pump. Drains located on both the suction and discharge lines of the pump are directed to the AFDT (TK-228). The piping is arranged for the system to drain back to the IST (TK-220) or through the drain valves.

AST-B Sample Pump (SP-221)

The AST-B sample pump and valves are located in the IST/AST-B Diked Area in the AFF. Solution is drawn by the pump from AST-B (TK-221) and pumped up through a sampler located in Lab Glovebox #8 (GB-008). In addition, there is an alternate suction for the sample pump near the low point of the AST-B (TK-221) and an alternate discharge route to the AFF tank heel pump down filter FLT-240 to de-inventory the tank. There are actuated flush valves on the suction and discharge sides of the pump. Drains located on both the suction and discharge lines of the pump are directed to the AFDT (TK-228). The piping is arranged for the system to drain back to AST-B (TK-221) or through the drain valves.

FFT-B Sample Pump (SP-222)

The FFT-B sample pump and valves are located in the DSSHT/FFT-B Diked Area in the AFF. Solution is drawn by the pump from the FFT-B (TK-222) and pumped up through a sampler located in Lab Glovebox #9 (GB-009). In addition, there is an alternate suction for the sample pump near the low point of the FFT-B (TK-222) and an alternate discharge route to the AFF tank heel pump down filter FLT-240 to de-inventory the tank. There are actuated flush valves on the suction and discharge sides of the pump. Drains located on both the suction and discharge lines of the pump are directed to the AFDT (TK-228). The piping is arranged for the system to drain back to the FFT-B (TK-222) or through the drain valves.

CSDT-B Sample Pump (SP-223)

The CSDT-B pump and valves are located in the DSSHT/FFT-B Diked Area in the AFF. Solution is drawn by the pump from the CSDT-B (TK-223) and pumped up through a sampler located in Lab Glovebox #9 (GB-009). There are actuated flush valves on the suction and discharge sides of the pump. Drains located on both the suction and discharge lines of the pump are directed to the AFDT (TK-228). The piping is arranged for the system to drain back to the CSDT-B (TK-223) or through the drain valves.

MSTT Sample Pump (SP-224)

The MSTT sample pump and valves are located in the DSSHT/FFT-B Diked Area in the AFF. Solution is drawn by the pump from the MSTT (TK-224) and pumped up through a sampler located in Lab Glovebox #9 (GB-009). There are actuated flush valves on the suction and discharge sides of the pump. Drains located on both the suction and discharge lines of the pump are directed to the AFDT (TK-228). The piping is arranged for the system to drain back to the MSTT (TK-224) or through the drain valves.

Other Major Components

Other major components outlined in Section 3.3.2 are discussed in their respective SDs. In general, sampling is accomplished as a minor function of the main process equipment and the equipment is located throughout the facility (e.g., the same pump is used for transferring solution as for sampling).

3.3.5 System Control Features and Interlocks

3.3.5.1 System Monitoring

See Table 3-3 for a listing of Sampler Monitoring Instrumentation.

Table 3-3. Sampler Monitoring Instrumentation

AST-A (TK-101) Sampler

Equipment/ Instrument Number	P&ID	Scale Sheet	Monitored Variable	Indications
FE-1663	M-M6-J-0151[21]	J-JZ-J-00635, *SWPF FIC-1663 AST-A Sample Pump Flow*[73]	Flow Rate	gpm
HV-1664	M-M6-J-0151[21]	Not Applicable (N/A)	Valve Position	Open/Closed
HV-1665	M-M6-J-0160[22]	N/A	Valve Position	Open/Closed
HV-1666	M-M6-J-0151[21]	N/A	Valve Position	Open/Closed
SC-1667	M-M6-J-0151[21]	J-JZ-J-01102, *SWPF SIC-1667 AST-A Sample Pump Speed*[74]	Pump (SP-101) Speed Control	0-100 percent (%)
SP-101	M-M6-J-0151[21]	N/A	Run Status	Run/Off
HV-1668	M-M6-J-0151[21]	N/A	Valve Position	Open/Closed
HV-1829	M-M6-J-0102[19]	N/A	Isolok Valve Position	Open/Closed
VE-9264B/C	M-M6-J-0151[21]	N/A	SP-101 Vibration	Cycles/second Inches/second

FFT-A (TK-102) Sampler

Equipment/ Instrument Number	P&ID	Scale Sheet	Monitored Variable	Indications
FE-1656	M-M6-J-0152[25]	J-JZ-J-00638, *SWPF FIC-1656 FFT-A Sample Pump Flow*[75]	Flow Rate	gpm
HV-1658	M-M6-J-0152[25]	N/A	Valve Position	Open/Closed
HV-1659	M-M6-J-0160[22]	N/A	Valve Position	Open/Closed
HV-1660	M-M6-J-0152[25]	N/A	Valve Position	Open/Closed
SC-1661	M-M6-J-0152[25]	J-JZ-J-01076, *SWPF SIC-1661 FFT-A Sample Pump Speed*[76]	Pump (SP-102) Speed Control	0-100%
SP-102	M-M6-J-0152[25]	N/A	Run Status	Run/Off
HV-1662	M-M6-J-0152[25]	N/A	Valve Position	Open/Closed
HV-1678	M-M6-J-0103[24]	N/A	Isolok Valve Position	Open/Closed
VE-9265B/C	M-M6-J-0152[25]	N/A	SP-102 Vibration	Cycles/second Inches/second

Table 3-3. Sampler Monitoring Instrumentation (cont.)

CSDT-A (TK-103) Sampler

Equipment/ Instrument Number	P&ID	Scale Sheet	Monitored Variable	Indications
HV-1685	M-M6-J-0152[25]	N/A	Valve Position	Open/Closed
HV-1686	M-M6-J-0160[22]	N/A	Valve Position	Open/Closed
HV-1687	M-M6-J-0152[25]	N/A	Valve Position	Open/Closed
SC-1688	M-M6-J-0152[25]	J-JZ-J-01103, *SWPF SIC-1688 CSDT-A Sample Pump Speed*[77]	Pump (SP-103) Speed Control	0-100%
SP-103	M-M6-J-0152[25]	N/A	Run Status	Run/Off
HV-1689	M-M6-J-0152[25]	N/A	Valve Position	Open/Closed
HV-1690	M-M6-J-0107[27]	N/A	Isolok Valve Position	Open/Closed
FE-1699	M-M6-J-0152[25]	J-JZ-J-00639, *SWPF FIC-1699 CSDT-A Sample Pump Flow*[78]	Flow Rate	gpm
VE-9267B/C	M-M6-J-0152[25]	N/A	SP-103 Vibration	Cycles/second Inches/second

SSRT (TK-104) Sampler

Equipment/ Instrument Number	P&ID	Scale Sheet	Monitored Variable	Indications
HV-1691	M-M6-J-0153[29]	N/A	Valve Position	Open/Closed
HV-1692	M-M6-J-0160[22]	N/A	Valve Position	Open/Closed
HV-1693	M-M6-J-0153[29]	N/A	Valve Position	Open/Closed
SC-1694	M-M6-J-0153[29]	J-JZ-J-01104, *SWPF SIC-1694 SSRT Sample Pump Speed*[79]	Pump (SP-104) Speed Control	0-100%
SP-104	M-M6-J-0153[29]	N/A	Run Status	Run/Off
HV-1695	M-M6-J-0153[29]	N/A	Valve Position	Open/Closed
FE-1696	M-M6-J-0153[29]	J-JZ-J-00641, *SWPF FIC-1696 SSRT Sample Pump Flow*[80]	Flow Rate	gpm
HV-1698	M-M6-J-0103[24]	N/A	Isolok Valve Position	Open/Closed
VE-9269B/C	M-M6-J-0153[29]	N/A	SP-104 Vibration	Cycles/second Inches/second

Table 3-3. Sampler Monitoring Instrumentation (cont.)

WWHT (TK-105) Sampler

Equipment/ Instrument Number	P&ID	Scale Sheet	Monitored Variable	Indications
HV-1760	M-M6-J-0105[31]	N/A	Isolok Valve Position	Open/Closed
HV-1761	M-M6-J-0153[29]	N/A	Valve Position	Open/Closed
HV-1762	M-M6-J-0160[22]	N/A	Valve Position	Open/Closed
HV-1763	M-M6-J-0153[29]	N/A	Valve Position	Open/Closed
SC-1764	M-M6-J-0153[29]	J-JZ-J-01107, *SWPF SIC-1764 WWHT Sample Pump Speed*[81]	Pump (SP-105) Speed Control	0-100%
SP-105	M-M6-J-0153[29]	N/A	Run Status	Run/Off
HV-1765	M-M6-J-0153[29]	N/A	Valve Position	Open/Closed
FE-1766	M-M6-J-0153[29]	J-JZ-J-00642, *SWPF FIC-1766 WWHT Sample Pump Flow*[82]	Flow Rate	gpm
VE-9270B/C	M-M6-J-0153[29]	N/A	SP-105 Vibration	Cycles/second Inches/second

SSFT (TK-109) Sampler

Equipment/ Instrument Number	P&ID	Scale Sheet	Monitored Variable	Indications
HV-1701	M-M6-J-0151[21]	N/A	Valve Position	Open/Closed
HV-1702	M-M6-J-0160[22]	N/A	Valve Position	Open/Closed
HV-1703	M-M6-J-0151[21]	N/A	Valve Position	Open/Closed
SC-1704	M-M6-J-0151[21]	J-JZ-J-01105, *SWPF SIC-1704 SSFT Sample Pump Speed*[83]	Pump (SP-109) Speed Control	0-100%
SP-109	M-M6-J-0151[21]	N/A	Run Status	Run/Off
HV-1705	M-M6-J-0151[21]	N/A	Valve Position	Open/Closed
FE-1707	M-M6-J-0151[21]	N/A	Flow Rate	gpm
HV-1706	M-M6-J-0104[34]	N/A	Isolok Valve Position	Open/Closed
VE-9263B/C	M-M6-J-0151[21]	N/A	SP-109 Vibration	Cycles/second Inches/second

Table 3-3. Sampler Monitoring Instrumentation (cont.)

SEHT (TK-205) Sampler

Equipment/ Instrument Number	P&ID	Scale Sheet	Monitored Variable	Indications
HV-1151	M-M6-J-0151[21]	N/A	Valve Position	Open/Closed
HV-1709	M-M6-J-0151[21]	N/A	Valve Position	Open/Closed
HV-1711	M-M6-J-0151[21]	N/A	Valve Position	AC/BC/ Intermediate Off
HV-1712	M-M6-J-0160[22]	N/A	Valve Position	Open/Closed
HV-1713	M-M6-J-0151[21]	N/A	Valve Position	Open/Closed
SC-1714	M-M6-J-0151[21]	J-JZ-J-01106, *SWPF SIC-1714 SEHT Sample Pump Speed*[84]	Pump (SP-205) Speed Control	0-100%
SP-205	M-M6-J-0151[21]	N/A	Run Status	Run/Off
HV-1715	M-M6-J-0151[21]	N/A	Valve Position	Open/Closed
FE-1716	M-M6-J-0151[21]	N/A	Flow Rate	gpm
HV-1717	M-M6-J-0151[21]	N/A	Valve Position	AC/BC
HV-1839	M-M6-J-0102[19]	N/A	Isolok Valve Position	Open/Closed
PIT-2013	M-M6-J-0151[21]	J-JZ-J-01179	SP-205 Discharge Pressure	psig
VE-9268B/C	M-M6-J-0151[21]	N/A	SP-205 Vibration	Cycles/second Inches/second

Lab Drain Tank (TK-235) Sampler

Equipment/ Instrument Number	P&ID	Scale Sheet	Monitored Variable	Indications
HV-1831	M-M6-J-0152[25]	N/A	Valve Position	Open/Closed
HV-1832	M-M6-J-0160[22]	N/A	Valve Position	Open/Closed
HV-1833	M-M6-J-0108[36]	N/A	Isolok Valve Position	Open/Closed
HV-1834	M-M6-J-0152[25]	N/A	Valve Position	Open/Closed
SC-1835	M-M6-J-0152[25]	J-JZ-J-01108, *SWPF SIC-1835 Lab Drain Tank Sample Pump Speed*[85]	Pump (SP-235) Speed Control	0-100%
SP-235	M-M6-J-0152[25]	N/A	Run Status	Run/Off
HV-1836	M-M6-J-0152[25]	N/A	Valve Position	Open/Closed
HV-1837	M-M6-J-0152[25]	N/A	Valve Position	AC/BC
FE-1838	M-M6-J-0152[25]	N/A	Flow Rate	gpm
HV-1840	M-M6-J-0152[25]	N/A	Valve Position	Open/Closed
HV-1830	M-M6-J-0152[25]	N/A	Valve Position	Open/Closed

Table 3-3. Sampler Monitoring Instrumentation (cont.)

Equipment/ Instrument Number	P&ID	Scale Sheet	Monitored Variable	Indications
HV-1854	M-M6-J-0152[25]	N/A	Valve Position	Open/Closed
PIT-2014	M-M6-J-0152[25]	J-JZ-J-01180	SP-235 Discharge Pressure	psig
VE-9266B/C	M-M6-J-0152[25]	N/A	SP-235 Vibration	Cycles/second Inches/second

DSSHT (TK-207) Sampler

Equipment/ Instrument Number	P&ID	Scale Sheet	Monitored Variable	Indications
HV-1860	M-M6-J-0154[40]	N/A	Valve Position	Open/Closed
HV-1861	M-M6-J-0154[40]	N/A	Valve Position	Open/Closed
HV-1862	M-M6-J-0110[38]	N/A	Isolok Valve Position	Open/Closed
FE-1863	M-M6-J-0154[40]	N/A	Flow Rate	gpm
SC-2226	M-M6-J-0154[40]	J-JZ-J-01122, *SWPF SIC-2226 DSSHT Sample Pump Speed*[86]	Pump (SP-207) Speed Control	0-100%
SP-207	M-M6-J-0154[40]	N/A	Run Status	Run/Off
HV-7003	M-M6-J-0154[40]	N/A	Valve Position	Open/Closed

IST (TK-220) Sampler

Equipment/ Instrument Number	P&ID	Scale Sheet	Monitored Variable	Indications
FE-1864	M-M6-J-0154[40]	N/A	Flow Rate	gpm
HV-1865	M-M6-J-0154[40]	N/A	Valve Position	Open/Closed
HV-1866	M-M6-J-0154[40]	N/A	Valve Position	Open/Closed
HV-1867	M-M6-J-0110[38]	N/A	Isolok Valve Position	Open/Closed
HV-7004	M-M6-J-0154[40]	N/A	Valve Position	Open/Closed
SC-7016	M-M6-J-0154[40]	J-JZ-J-01211, *SWPF SIC-7016 IST Sample Pump Speed*[87]	Pump (SP-220) Speed Control	0-100%
SP-220	M-M6-J-0154[40]	N/A	Run Status	Run/Off

Table 3-3. Sampler Monitoring Instrumentation (cont.)

AST-B (TK-221) Sampler

Equipment/ Instrument Number	P&ID	Scale Sheet	Monitored Variable	Indications
HV-1841	M-M6-J-0154[40]	N/A	Valve Position	Open/Closed
HV-1842	M-M6-J-0154[40]	N/A	Valve Position	Open/Closed
HV-1843	M-M6-J-0110[38]	N/A	Isolok Valve Position	Open/Closed
FE-1868	M-M6-J-0154[40]	N/A	Flow Rate	gpm
SC-7053	M-M6-J-0154[40]	J-JZ-J-01212, *SWPF SIC-7053 AST-B Sample Pump Speed*[88]	Pump (SP-221) Speed Control	0-100%
SP-221	M-M6-J-0154[40]	N/A	Run Status	On/Off
HV-7005	M-M6-J-0154[40]	N/A	Valve Position	Open/Closed

FFT-B (TK-222) Sampler

Equipment/ Instrument Number	P&ID	Scale Sheet	Monitored Variable	Indications
FE-1844	M-M6-J-0155[45]	N/A	Flow Rate	gpm
HV-1845	M-M6-J-0155[45]	N/A	Valve Position	Open/Closed
HV-1846	M-M6-J-0155[45]	N/A	Valve Position	Open/Closed
HV-1847	M-M6-J-0111[44]	N/A	Isolok Valve Position	Open/Closed
SC-7062	M-M6-J-0155[45]	J-JZ-J-01213, *SWPF SIC-7062 FFT-B Sample Pump Speed*[89]	Pump (SP-222) Speed Control	0-100%
SP-222	M-M6-J-0155[45]	N/A	Run Status	Run/Off
HV-7006	M-M6-J-0155[45]	N/A	Valve Position	Open/Closed

CSDT-B (TK-223) Sampler

Equipment/ Instrument Number	P&ID	Scale Sheet	Monitored Variable	Indications
FE-1848	M-M6-J-0155[45]	N/A	Flow Rate	gpm
HV-1850	M-M6-J-0155[45]	N/A	Valve Position	Open/Closed
HV-1851	M-M6-J-0155[45]	N/A	Valve Position	Open/Closed
HV-1853	M-M6-J-0111[44]	N/A	Isolok Valve Position	Open/Closed
SC-7163	M-M6-J-0155[45]	J-JZ-J-01221, *SWPF SIC-7163 CSDT-B Sample Pump Speed*[90]	Pump (SP-223) Speed Control	0-100%
SP-223	M-M6-J-0155[45]	N/A	Run Status	Run/Off
HV-7007	M-M6-J-0155[45]	N/A	Valve Position	Open/Closed

Table 3-3. Sampler Monitoring Instrumentation (cont.)

MSTT (TK-224) Sampler

Equipment/ Instrument Number	P&ID	Scale Sheet	Monitored Variable	Indications
FE-1849	M-M6-J-0155[45]	J-JZ-J-00648, *SWPF FIC-1849 MSTT Sample Pump Flow*[91]	Flow Rate	gpm
HV-1855	M-M6-J-0155[45]	N/A	Valve Position	Open/Closed
HV-1856	M-M6-J-0155[45]	N/A	Valve Position	Open/Closed
HV-1857	M-M6-J-0112[48]	N/A	Isolok Valve Position	Open/Closed
SC-7207	M-M6-J-0155[45]	J-JZ-J-01222, *SWPF SIC-7207 MST/Sludge Transfer Tank Sample Pump Speed*[92]	Pump (SP-224) Speed Control	0-100%
SP-224	M-M6-J-0155[45]	N/A	Run Status	Run/Off
HV-7008	M-M6-J-0155[45]	N/A	Valve Position	Open/Closed

ASDT (TK-601) Sampler

Equipment/ Instrument Number	P&ID	Scale Sheet	Monitored Variable	Indications
HV-1808	M-M6-J-0104[34]	N/A	Isolok Valve Position	Open/Closed
HV-7270	M-M6-J-0160[22]	N/A	Valve Position	Open/Closed
FE-7283	M-M6-J-0062 SH2[51]	J-JZ-J-00538, *SWPF FIC-7283 ASDT Sample Flow*[93]	Flow Rate	gpm
FV-7283	M-M6-J-0062 SH2[51]	N/A	Valve Position	0-100%

SAST (TK-127) Sampler

Equipment/ Instrument Number	P&ID	Scale Sheet	Monitored Variable	Indications
HV-1824	M-M6-J-0108[36]	N/A	Isolok Valve Position	Open/Closed
HV-7269	M-M6-J-0160[22]	N/A	Valve Position	Open/Closed
FE-7285	M-M6-J-0062 SH2[51]	J-JZ-J-00539, *SWPF FIC-7285 SAST Sample Flow*[94]	Flow Rate	gpm
FV-7285	M-M6-J-0062 SH2[51]	N/A	Valve Position	0-100%

Table 3-3. Sampler Monitoring Instrumentation (cont.)

SHT (TK-202) Sampler

Equipment/ Instrument Number	P&ID	Scale Sheet	Monitored Variable	Indications
HV-1811	M-M6-J-0109[55]	N/A	Valve Position	Open/Closed
HV-1813	M-M6-J-0109[55]	N/A	Valve Position	Open/Closed
HV-1816	M-M6-J-0109[55]	N/A	Valve Position	Open/Closed
HV-1818	M-M6-J-0109[55]	N/A	Valve Position	Open/Closed
HV-1822	M-M6-J-0109[55]	N/A	Isolok Valve Position	Open/Closed
TE-1823	M-M6-J-0109[55]	J-JZ-J-00592, *SWPF TIC-1823 Solvent Adj HX-250 Disch Temp*[95]	HX-250 Discharge Temperature	degrees Fahrenheit (°F)
TV-1823	M-M6-J-0109[55]	J-JZ-J-00592[95]	Valve Position	0-100%
PDI-1826	M-M6-J-0109[55]	N/A	Differential Pressure	psig
FE-2137	M-M6-J-0046 SH2[54]	J-JZ-J-00447, *SWPF FIC-2137 Solvent Feed Pump B Sample Flow*[96]	Flow Rate (from P-202B)	gpm
FV-2137	M-M6-J-0046 SH2[54]	N/A	Valve Position	0-100%
FE-2138	M-M6-J-0046 SH2[54]	J-JZ-J-00448, *SWPF FIC-2138 Solvent Feed Pump A Sample Flow*[97]	Flow Rate (from P-202A)	gpm
FV-2138	M-M6-J-0046 SH2[54]	N/A	Valve Position	0-100%
PIT-2242	M-M6-J-0046 SH2[54]	J-JZ-J-00449	Sample Loop Pressure	psig
PIT-2243	M-M6-J-0046 SH2[54]	J-JZ-J-00450	Sample Loop Pressure	psig

Table 3-3. Sampler Monitoring Instrumentation (cont.)

BDT (TK-206) Sampler

Equipment/ Instrument Number	P&ID	Scale Sheet	Monitored Variable	Indications
HV-1819	M-M6-J-0106[58]	N/A	Isolok Valve Position	Open/Closed
HV-1905	M-M6-J-0047 SH2[56]	N/A	Isolok Valve Position	Open/Closed
HV-1906	M-M6-J-0047 SH2[56]	N/A	Isolok Valve Position	Open/Closed
HV-1907	M-M6-J-0047 SH2[56]	N/A	Isolok Valve Position	Open/Closed
HV-1908	M-M6-J-0047 SH2[56]	N/A	Isolok Valve Position	Open/Closed
FE-2182	M-M6-J-0047 SH3[57]	J-JZ-J-00455, *SWPF FIC-2182 BDT Xfer Pump A Sample Flow*[98]	Flow Rate (from P-206A)	gpm
FV-2182	M-M6-J-0047 SH3[57]	N/A	Valve Position	0-100%
FE-2187	M-M6-J-0047 SH3[57]	J-JZ-J-00456, *SWPF FIC-2187 BDT Xfer Pump B Sample Flow*[99]	Flow Rate (from P-206B)	gpm
FV-2187	M-M6-J-0047 SH3[57]	N/A	Valve Position	0-100%

Caustic Wash Tank (TK-204) Sampler

Equipment/ Instrument Number	P&ID	Scale Sheet	Monitored Variable	Indications
HV-1825	M-M6-J-0106[58]	N/A	Isolok Valve Position	Open/Closed
FE-2075	M-M6-J-0043 SH3[60]	J-JZ-J-00440, *SWPF FIC-2075 Caustic Wash Tank Pump B Sample Flow*[100]	Flow Rate (from P-204B)	gpm
FV-2075	M-M6-J-0043 SH3[60]	N/A	Valve Position	0-100%
FE-2084	M-M6-J-0043 SH3[60]	J-JZ-J-00441, *SWPF FIC-2084 Caustic Wash Tank Pump A Sample Flow*[101]	Flow Rate (from P-204A)	gpm
FV-2084	M-M6-J-0043 SH3[60]	N/A	Valve Position	0-100%

Table 3-3. Sampler Monitoring Instrumentation (cont.)

SDT (TK-208) Sampler

Equipment/ Instrument Number	P&ID	Scale Sheet	Monitored Variable	Indications
HV-1652	M-M6-J-0109[55]	N/A	Isolok Valve Position	Open/Closed
FE-2046	M-M6-J-0121 SH2[63]	J-JZ-J-00612, *SWPF FIC-2046 Solvent Drain Tank Pump A Sample Flow*[102]	Flow Rate (from P-208A)	gpm
FV-2046	M-M6-J-0121 SH2[63]	N/A	Valve Position	0-100%
FE-2117	M-M6-J-0121 SH2[63]	J-JZ-J-00613, *SWPF FIC-2117 Solvent Drain Tank Pump B Sample Flow*[103]	Flow Rate (from P-208B)	gpm
FV-2117	M-M6-J-0121 SH2[63]	N/A	Valve Position	0-100%
HV-2118	M-M6-J-0160[22]	N/A	Valve Position	Open/Closed
HV-2120	M-M6-J-0160[22]	N/A	Valve Position	Open/Closed

Strip Effluent Pump Tank (TK-215) Sampler

Equipment/ Instrument Number	P&ID	Scale Sheet	Monitored Variable	Indications
HV-1674	M-M6-J-0101[64]	N/A	Isolok Valve Position	Open/Closed
FE-2057	M-M6-J-0123[66]	J-JZ-J-00617, *SWPF FIC-2057 SEPT Pump A Sample Flow*[104]	Flow Rate (from P-215A)	gpm
FV-2057	M-M6-J-0123[66]	N/A	Valve Position	0-100%
FE-2065	M-M6-J-0123[66]	J-JZ-J-00618, *SWPF FIC-2065 SEPT Pump B Sample Flow*[105]	Flow Rate (from P-215B)	gpm
FV-2065	M-M6-J-0123[66]	N/A	Valve Position	0-100%

Solvent Strip Feed Tank (TK-217) Sampler

Equipment/ Instrument Number	P&ID	Scale Sheet	Monitored Variable	Indications
HV-1675	M-M6-J-0101[64]	N/A	Isolok Valve Position	Open/Closed
FE-2191	M-M6-J-0060 SH2[68]	J-JZ-J-00528, *SWPF FIC-2191 Solvent Strip Feed Pump A Sample Flow*[106]	Flow Rate (from P-217A)	gpm
FV-2191	M-M6-J-0060 SH2[68]	N/A	Valve Position	0-100%
FE-2195	M-M6-J-0060 SH2[68]	J-JZ-J-00529, *SWPF FIC-2195 Solvent Strip Feed Pump B Sample Flow*[107]	Flow Rate (from P-217B)	gpm
FV-2195	M-M6-J-0060 SH2[68]	N/A	Valve Position	0-100%

Table 3-3. Sampler Monitoring Instrumentation (cont.)

AFDT (TK-228) Sampler

Equipment/ Instrument Number	P&ID	Scale Sheet	Monitored Variable	Indications
HV-1852	M-M6-J-0112[48]	N/A	Isolok Valve Position	Open/Closed
FE-7230	M-M6-J-0063[69]	J-JZ-J-00541, *SWPF FIC-7230 AFDT Discharge Flow*[108]	Flow Rate (from P-228)	gpm
HV-7214	M-M6-J-0063[69]	N/A	Valve Position	AC/BC / Intermediate Off

CSSX Tank Cell Sump (SMP-206 and SMP-217) Sampler

Equipment/ Instrument Number	P&ID	Scale Sheet	Monitored Variable	Indications
HV-1657	M-M6-J-0108[36]	N/A	Isolok Valve Position	Open/Closed
HV-2010	M-M6-J-0126[70]	N/A	Valve Position	AC/BC

ASP Tank Cell Sumps (SMP-101, SMP-102, SMP-104, SMP-109, SMP-205, and SMP-601) Sampler

Equipment/ Instrument Number	P&ID	Scale Sheet	Monitored Variable	Indications
HV-1725	M-M6-J-0107[27]	N/A	Isolok Valve Position	Open/Closed
HV-1751	M-M6-J-0020 SH3[72]	N/A	Valve Position	Open/Closed

3.3.5.2 Control Functions

See Table 3-4 for a listing of control loops.

Table 3-4. Sampling Control Loops

AST-A (TK-101) Sampler

Loop Number	P&ID	Scale Sheet	Controlled Variable	Set Point
FIC-1663	M-M6-J-0151[21]	J-JZ-J-00635[73]	Sample Flow Rate	4 gpm

FFT-A (TK-102) Sampler

Loop Number	P&ID	Scale Sheet	Controlled Variable	Set Point
FIC-1656	M-M6-J-0152[25]	J-JZ-J-00638[75]	Sample Flow Rate	3.7 gpm

Table 3-4. Sampling Control Loops (cont.)

CSDT-A (TK-103) Sampler

Loop Number	P&ID	Scale Sheet	Controlled Variable	Set Point
FIC-1699	M-M6-J-0152[25]	J-JZ-J-00639[77]	Sample Flow Rate	4 gpm

SSRT (TK-104) Sampler

Loop Number	P&ID	Scale Sheet	Controlled Variable	Set Point
FIC-1696	M-M6-J-0153[29]	J-JZ-J-00641[80]	Sample Flow Rate	11 gpm

WWHT (TK-105) Sampler

Loop Number	P&ID	Scale Sheet	Controlled Variable	Set Point
FIC-1766	M-M6-J-0153[29]	J-JZ-J-00642[82]	Sample Flow Rate	3 gpm

SSFT (TK-109) Sampler

Loop Number	P&ID	Scale Sheet	Controlled Variable	Set Point
FIC-1707	M-M6-J-0151[21]	J-JZ-J-00636, *SWPF FIC-1707 SSFT Sample Pump Flow*[109]	Sample Flow Rate	3 gpm

SEHT (TK-205) Sampler

Loop Number	P&ID	Scale Sheet	Controlled Variable	Set Point
FIC-1716	M-M6-J-0151[21]	J-JZ-J-00637, *SWPF FIC-1716 SEHT Sample Pump Flow*[110]	Sample Flow Rate	3 gpm

Lab Drain Tank (TK-235) Sampler

Loop Number	P&ID	Scale Sheet	Controlled Variable	Set Point
FIC-1838	M-M6-J-0152[25]	J-JZ-J-00640, *SWPF FIC-1838 LDT Sample Pump Flow*[111]	Sample Flow Rate	4 gpm

DSSHT (TK-207) Sampler

Loop Number	P&ID	Scale Sheet	Controlled Variable	Set Point
FIC-1863	M-M6-J-0154[40]	J-JZ-J-00643, *SWPF FIC-1863 DSSHT Sample Pump Flow*[112]	Sample Flow Rate	25 gpm

IST (TK-220) Sampler

Loop Number	P&ID	Scale Sheet	Controlled Variable	Set Point
FIC-1864	M-M6-J-0154[40]	J-JZ-J-00644, *SWPF FIC-1864 IST Sample Pump Flow*[113]	Sample Flow Rate	25 gpm

Table 3-4. Sampling Control Loops (cont.)

AST-B (TK-221) Sampler

Loop Number	P&ID	Scale Sheet	Controlled Variable	Set Point
FIC-1868	M-M6-J-0154[40]	J-JZ-J-00645, *SWPF FIC-1868 AST-B Sample Pump Flow*[114]	Sample Flow Rate	25 gpm

FFT-B (TK-222) Sampler

Loop Number	P&ID	Scale Sheet	Controlled Variable	Set Point
FIC-1844	M-M6-J-0155[45]	J-JZ-J-00646, *SWPF FIC-1844 FFT-B Sample Pump Flow*[115]	Sample Flow Rate	25 gpm

CSDT-B (TK-223) Sampler

Loop Number	P&ID	Scale Sheet	Controlled Variable	Set Point
FIC-1848	M-M6-J-0155[45]	J-JZ-J-00647, *SWPF FIC-1848 CSDT-B Sample Pump Flow*[116]	Sample Flow Rate	4 gpm

MSTT (TK-224) Sampler

Loop Number	P&ID	Scale Sheet	Controlled Variable	Set Point
FIC-1849	M-M6-J-0155[45]	J-JZ-J-00648[91]	Sample Flow Rate	3.55 gpm

ASDT (TK-601) Sampler

Loop Number	P&ID	Scale Sheet	Controlled Variable	Set Point
FIC-7283	M-M6-J-0062 SH2[51]	J-JZ-J-00538[93]	Sample Flow Rate	3 gpm

SAST (TK-127) Sampler

Loop Number	P&ID	Scale Sheet	Controlled Variable	Set Point
FIC-7285	M-M6-J-0062 SH2[51]	J-JZ-J-00539[94]	Sample Flow Rate	3 gpm

SHT (TK-202) Sampler

Loop Number	P&ID	Scale Sheet	Controlled Variable	Set Point
TIC-1823	M-M6-J-0109[55]	J-JZ-J-00592[95]	HX-250 Discharge Temperature	122 °F
FIC-2137	M-M6-J-0046 SH2[54]	J-JZ-J-00447[96]	Sample Flow Rate (From P-202B)	3 gpm
FIC-2138	M-M6-J-0046 SH2[54]	J-JZ-J-00448[97]	Sample Flow Rate (From P-202A)	3 gpm

Table 3-4. Sampling Control Loops (cont.)

BDT (TK-206) Sampler

Loop Number	P&ID	Scale Sheet	Controlled Variable	Set Point
FIC-2182	M-M6-J-0047 SH3[57]	J-JZ-J-00455[98]	Sample Flow Rate (From P-206A)	3 gpm
FIC-2187	M-M6-J-0047 SH3[57]	J-JZ-J-00456[99]	Sample Flow Rate (From P-206B)	3 gpm

Caustic Wash Tank (TK-204) Sampler

Loop Number	P&ID	Scale Sheet	Controlled Variable	Set Point
FIC-2075	M-M6-J-0043 SH3[60]	J-JZ-J-00440[100]	Sample Flow Rate (From P-204B)	5 gpm
FIC-2084	M-M6-J-0043 SH3[60]	J-JZ-J-00441[101]	Sample Flow Rate (From P-204A)	5 gpm

SDT (TK-208) Sampler

Loop Number	P&ID	Scale Sheet	Controlled Variable	Set Point
FIC-2046	M-M6-J-0121 SH2[63]	J-JZ-J-00612[102]	Sample Flow Rate (From P-208A)	5 gpm
FIC-2117	M-M6-J-0121 SH2[63]	J-JZ-J-00613[103]	Sample Flow Rate (From P-208B)	5 gpm

Strip Effluent Pump Tank (TK-215) Sampler

Loop Number	P&ID	Scale Sheet	Controlled Variable	Set Point
FIC-2057	M-M6-J-0123[66]	J-JZ-J-00617[104]	Sample Flow Rate (From P-215A)	5 gpm
FIC-2065	M-M6-J-0123[66]	J-JZ-J-00618[105]	Sample Flow Rate (From P-215B)	5 gpm

Solvent Strip Feed Tank (TK-217) Sampler

Loop Number	P&ID	Scale Sheet	Controlled Variable	Set Point
FIC-2191	M-M6-J-0060 SH2[68]	J-JZ-J-00528[106]	Sample Flow Rate (From P-217A)	3 gpm
FIC-2195	M-M6-J-0060 SH2[68]	J-JZ-J-00529[107]	Sample Flow Rate (From P-217B)	3 gpm

AFDT (TK-228) Sampler

Loop Number	P&ID	Scale Sheet	Controlled Variable	Set Point
There are no control loops.	N/A	N/A	N/A	N/A

Table 3-4. Sampling Control Loops (cont.)

CSSX Tank Cell Sump (SMP-206 and SMP-217) Sampler

Loop Number	P&ID	Scale Sheet	Controlled Variable	Set Point
There are no control loops.	N/A	N/A	N/A	N/A

ASP Tank Cell Sumps (SMP-101, SMP-102, SMP-104, SMP-109, SMP-205, and SMP-601) Sampler

Loop Number	P&ID	Scale Sheet	Controlled Variable	Set Point
There are no control loops.	N/A	N/A	N/A	N/A

3.4 Operations

3.4.1 Initial Configuration

Samplers AST-A (TK-101), FFT-A (TK-102), CSDT-A (TK-103), SSRT (TK-104), WWHT (TK-105), SSFT (TK-109), SEHT (TK-205), and Lab Drain Tank (TK-235) are configured as described below.

The manual isolation valves on the pump suction and discharge lines are verified open, the manual flush isolation valves are verified open, the manual flush valves to the discharge side of the pump are verified closed, the manual drain isolation valves are verified open, actuated valves in the system are closed or in fail/rest position (e.g., 3-way valves), and the sample pumps are off. In addition, the systems have been flushed from previous sampling or flushed and drained from maintenance activities.

Samplers DSSHT (TK-207), IST (TK-220), AST-B (TK-221), FFT-B (TK-222), CSDT-B (TK-223), and MSTT (TK-224) are configured as described below.

For AST-B (TK-221) or FFT-B (TK-222), ensure the lower sample suction manual isolation valves are closed. The manual isolation valves for the normal sample point on the pump suction lines, the discharge lines, the manual flush isolation valves are verified open, the positions of the manual diverter valves are verified to direct flow to the laboratory samplers, actuated valves are closed or in the fail/rest position (e.g., 3-way valves), the manual drain valves are verified closed, and the sample pumps are off. In addition, the systems have been flushed or flushed and drained from maintenance activities.

Samplers ASDT (TK-601), SAST (TK-127), BDT (TK-206), SDT (TK-208),AFDT (TK-228), CSSX Tank Cell Sump (SMP-206 and SMP-217), and ASP Tank Cell Sumps (SMP-101, SMP-102, SMP-104, SMP-109, SMP-205, and SMP-601) are configured as described below.

Any manual valves in the flow path (e.g., on the pump suction line, pump discharge, etc.) are verified open, any manual flush isolation valves to sample lines are verified open (e.g., in CSSX systems), actuated valves in the flow path to the samplers are closed or in the fail/rest position (e.g., 3-way valves). In addition, the lines to the samplers have been flushed or flushed and drained from maintenance activities. Because samples from the systems are taken as slip-stream or non-routine activity, the main process flows may be ongoing.

Samplers for the Caustic Wash Tank (TK-204), Strip Effluent Pump Tank (TK-215), and Solvent Strip Feed Tank (TK-217) are configured as described below.

Any manual valves in the flow path (e.g., on the pump suction line, pump discharge, etc.) are verified open, any manual flush isolation valves to sample lines are verified open, actuated valves in the flow path to the samplers are placed in a fixed position (configurable) as part of the CSSX Start-up automation. Because samples from the systems are taken as slip-stream, the main process flows are ongoing.

The Sampler for the Solvent Hold Tank (TK-202) is configured as described below.

Any manual valves in the flow path (e.g., on the pump suction line, pump discharge, etc.) are verified open, any manual flush isolation valves to sample lines are verified open, actuated valves in the flow path to the samplers are placed in a fixed position (configurable) as part of the CSSX Start-up automation. Because the sample from the system is taken as a slip-stream, the main process flow is ongoing.

3.4.2 System Start-up

In most cases, sampling is initiated by the Operator in coordination with the Laboratory and operations personnel. To initiate a sampling sequence, the Operator verifies that the initial valve configuration has been completed, selects the tank/stream to be sampled and the Operator confirms that the sampling is ready to begin. The Basic Process Control System (BPCS) then initiates the sampling sequence (e.g., opening the required actuated valves in the flow path, initiating flow control sequences if needed, starting sample pumps, or adjusting flow rates on main process pumps).

For the Caustic Wash Tank (TK-204), Strip Effluent Pump Tank (TK-215), and Solvent Strip Feed Tank (TK-217) samplers, sampling is initiated by the Operator in coordination with the Laboratory and operations personnel. The Operator confirms that the sampling is ready to begin. The Basic Process Control System (BPCS) then initiates the sampling sequence (e.g., verifies the required flow rate through the sample loop).

For the Solvent Hold Tank (TK-202) sampler, sampling is initiated by the Operator in coordination with the Laboratory and operations personnel. The Operator confirms that the sampling is ready to begin. The Basic Process Control System (BPCS) then initiates the sampling sequence (e.g., verifies the required flow rate through the sample loop).

3.4.3 Normal Operations

In general, all of the tanks are sampled in the same way. Once the Operator has selected a tank/stream to sample via the BPCS, the control system then initiates a sequence to complete the sampling that includes:

1. Opening valves in the recirculation path**, if required**;
2. Starting Sample Pumps, if needed;
3. Recirculating solution to the sampler in the laboratory for a minimum period of time (expected to be on the order of 10 minutes, which will be confirmed during Commissioning);
4. Controlling the flow rate of liquid through the sampler**, if a fixed valve position is not used**;
5. Notifying the Laboratory personnel that the sample is ready to be taken;
6. Continuing to circulate solution until the sample is taken and acknowledged by the Laboratory personnel; **and**
7. Flushing the system after the sampling is complete (exception**s are** the Solvent Hold Tank [TK-202]**, Caustic Wash Tank (TK-204), Strip Effluent Pump Tank (TK-215), and Solvent Strip Feed Tank (TK-217))**.

Specifics for each system are given below.

For the following Samplers, pump speed is controlled using a VFD to meet the flow rate set point entered in the BPCS:

- AST-A (TK-101),
- FFT-A (TK-102),
- CSDT-A (TK-103),
- SSRT (TK-104),
- WWHT (TK-105),
- SSFT (TK-109),
- SEHT (TK-205), and
- Lab Drain Tank (TK-235).

Operation of the sample pump does not affect main process operations. However, the sample pump (SP-235) for the Lab Drain Tank (TK-235) is the only method for transferring material out of the Lab Drain Tank (TK-235). Therefore, when sampling, other transfer operations from the Lab Drain Tank (TK-235) cannot proceed (e.g., transfer to the Drum Off Station). However, prior to transferring the material out of the Lab Drain Tank (TK-235), it will require sampling. Thus, sampling will not impact operations. Flushing the recirculation line requires operating the pump with the flush valve open and the tank suction valve closed.

For the following Samplers, pump speed is controlled using a VFD to meet the flow rate set point entered in the BPCS:

- DSSHT (TK-207),
- IST (TK-220),
- AST-B (TK-221),
- FFT-B (TK-222),
- CSDT-B (TK-223), and
- MSTT (TK-224).

Operation of the sample pump does not affect main process operations. Actuated flush valves on the suction and discharge sides of the pump are used to flush the pump suction and recirculation line following sampling.

For the ASDT (TK-601) Sampler, either pump P-601A or P-601B can be used to sample the ASDT (TK-601). However, when using pump P-601B to sample the ASDT (TK-601), normal operations in the SAST (TK-127) cannot be completed. When sampling the ASDT (TK-601), solution is recirculated through the tank and a slip stream is “pulled off” the recirculation line. Therefore, the pump speed is set to account for the recirculation flow rate plus the flow rate to the sampler. To control flow of the slip stream to the sampler, the flow meter in the sampling line is used to control the position of the flow control valve. The remainder of the flow goes to tank recirculation. An actuated flush valve on the sample line is used to flush the recirculation line following sampling.

For the SAST (TK-127) Sampler, either pump P-601A or P-601B can be used to sample the SAST (TK-127). However, when using pump P-601A to sample the SAST (TK-127), normal operations in ASDT (TK-601) cannot be completed. When sampling the SAST (TK-127), solution is recirculated through the tank and a slip stream is “pulled off” the recirculation line. Therefore, the pump speed is set to account for the recirculation flow rate plus the flow rate to the sampler. To control flow of the slip stream to the sampler, the flow meter in the sampling line is used to control the position of the flow control valve. The remainder of the flow goes to tank recirculation. An actuated flush valve on the sample line is used to flush the recirculation line to the laboratory on completion of sampling.

For the BDT (TK-206) Sampler, either pump P-206A or P-206B can be used to sample the BDT (TK-206). The service pump is the one used to sample. Sampling can be completed when using the pumps for other purposes (e.g., transfer of Decontaminated Salt Solution, etc.) or the pumps can be used exclusively to direct flow to the sampler. To control flow of the slip stream to the sampler, the flow meter in the sampling line is used to control the position of the flow control valve. The isolation valve for the sample return path is opened to direct the flow to the quadrant being sampled. An actuated flush valve on the sample line is used to flush the recirculation line following sampling.

For the Caustic Wash Tank (TK-204) Sampler, either pump P-204A or P-204B can be used to sample the Caustic Wash Tank (TK-204). The service pump is the one used to sample. Sampling can be completed when using the pumps for other purposes (e.g., caustic wash feed to the contactors, etc.) or the pumps can be used exclusively to direct flow to the sampler **(manual operation)**. **The actuated valve in the flow path to the sampler is placed in a fixed position (configurable) as part of the CSSX Start-up automation. The pump speed is set to account for the total flow rate of the system (e.g., the flow rate to the sampler plus the caustic wash feed flow rate). An actuated flush valve on the sample line may be used to flush the recirculation line following sampling (manual operation).**

For the Strip Effluent Pump Tank (TK-215) Sampler, either pump P-215A or P-215B can be used to sample the Strip Effluent Pump Tank (TK-215). The service pump is the one used to sample. Sampling can be completed when using the pumps for other purposes (e.g., transfer of strip effluent, etc.) or the pumps can be used exclusively to direct flow to the sampler **(manual operation)**. **The actuated valve in the flow path to the sampler is placed in a fixed position (configurable) as part of the CSSX Start-up automation. The pump speed is set to maintain a constant level in the Strip Effluent Pump Tank (TK-215). An actuated flush valve on the sample line may be used to flush the recirculation line following sampling (manual operation).**

For the SDT (TK-208) Sampler, either pump P-208A or P-208B can be used to sample the SDT (TK-208). The service pump will be the one used to sample. Sampling can be completed when using the pumps for other purposes (e.g., recirculation flow, feed to the contactors, etc.) or the pumps can be used exclusively to direct flow to the sampler. Therefore, the pump speed is set to account for the total flow rate of the system (e.g., the flow rate to the sampler plus the recirculation flow rate plus the feed flow rate). To control flow of the slip stream to the sampler, the flow meter in the sampling line is used to control the position of the flow control valve. The remainder of the flow goes to the other users, and flow rates are controlled by their individual flow control loops. An actuated flush valve on the sample line is used to flush the recirculation line following sampling.

For the SHT (TK-202) Sampler, either pump P-202A or P-202B can be used to sample the SHT (TK-202). The service pump will be the one used to sample. Sampling can be completed when using the pumps for other purposes (e.g., recirculation flow, solvent feed to the contactors, etc.) or the pumps can be used exclusively to direct flow to the sampler (Manual operation). The actuated valve in the flow path to the sampler is placed in the fixed position (configurable) as part of the CSSX Start-up automation. The pump speed is set to account for the total flow rate of the system (e.g., the flow rate to the sampler plus the flow rate to the Extraction contactors). A piping connection exterior to the Hot Cell may be used to flush the recirculation line following sampling (manual operation). See X-SD-J-00002[7] and X-SD-J-00009[12] for additional discussion of the SHT (TK-202) sample loop components (FLT-250, HX-250).

For the Solvent Strip Feed Tank (TK-217) Sampler, either pump P-217A or P-217B can be used to sample the Solvent Strip Feed Tank (TK-217). The service pump will be the one used to sample. Sampling can be completed when using the pumps for other purposes (e.g., solvent feed

to the strip contactors, etc.) or the pumps can be used exclusively to direct flow to the sampler **(manual operation)**. **The actuated valve in the flow path to the sampler is placed in a fixed position (configurable) as part of the CSSX Start-up automation. The pump speed is set to maintain a constant level in the Solvent Strip Feed Tank (TK-217). An actuated flush valve on the sample line may be used to flush the recirculation line following sampling (manual operation).**

For the AFDT (TK-228) Sampler, pump P-228 can be used to direct flow to the laboratory sampler. Pump speed (i.e., flow rate) is set manually by adjusting the air flow rate to the pump.

For the CSSX Tank Cell Sump (SMP-206 and SMP-217) Sampler, pump P-218 can be used to direct flow to the laboratory sampler. Pump speed (i.e., flow rate) is set manually by adjusting the air flow rate to the pump.

For the ASP Tank Cell Sumps (SMP-101, SMP-102, SMP-104, SMP-109, SMP-205, and SMP-601) Sampler, pump P-110 can be used to direct flow to the laboratory sampler. Pump speed (i.e., flow rate) is set manually by adjusting the air flow rate to the pump.

The process sequences for most of the Samplers are included in X-PCD-J-00006, *SWPF Automation Functional Control Sequence for: Sampling Systems*[117]. The other process sequences are included in X-PCD-J-00001, *SWPF Automation Functional Control Sequence for: Caustic-side Solvent Extraction*[118]; X-PCD-J-00003, *SWPF Automation Functional Control Sequence for: Alpha Finishing Process*[119]; X-PCD-J-00004, *SWPF Automation Functional Control Sequence for: Alpha Strike Process*[120]; and X-PCD-J-00005, *SWPF Automation Functional Control Sequence for: Drains*[121].

3.4.4 Off-Normal and Recovery Operation

Off-normal operations include tank heel pump down. This allows the tank heel to be minimized using the sample pump. De-inventorying the tank on an occasional basis ensures that there is not excessive solvent accumulation in the top of the tank. The following sample pumps can be used to de-inventory the associated tanks:

- SEHT Sample Pump (SP-205),
- DSSHT Sample Pump (SP-207),
- IST Sample Pump (SP-220),
- AST-B Sample Pump (SP-221), and
- FFT-B Sample Pump (SP-222).

The only postulated failure events identified were pump failure, valve failure, and leakage. Each of these failures and their recovery is covered below.

CPA Sample Pump Systems

The following sample pumps are located in the Sample P&VG Labyrinth and are typically used to sample streams with high radiation levels:

- AST-A Sample Pump (SP-101),
- FFT-A Sample Pump (SP-102),
- CSDT-A Sample Pump (SP-103),
- SSRT Sample Pump (SP-104),
- WWHT Sample Pump (SP-105),
- SSFT Sample Pump (SP-109),
- SEHT Sample Pump (SP-205), and
- Lab Drain Tank Sample Pump (SP-235).

Failure of components (i.e., pumps or valves) in this area requires flushing and draining prior to making personnel entry.

Recovery procedures for a failed pump or failed valve for any of these systems will follow the same general procedure. Both pump suction and discharge are flushed and drained. Depending on the failure, either complete draining or complete flushing of the affected system may not be able to be completed. If one method (i.e., draining or flushing) cannot be completed, the other method should be able to be completed. Once the dose rate is sufficiently reduced to allow personnel entry, the pump can be repaired. If leakage has occurred, the labyrinth itself will need to be decontaminated using standard practices, or if necessary, using the provided spray system.

AFP Sample Pump Systems

The following sample pumps are located in the AFF and are typically used to sample streams with low radiation levels:

- DSSHT Sample Pump (SP-207),
- IST Sample Pump (SP-220),
- AST-B Sample Pump (SP-221),
- FFT-B Sample Pump (SP-222),
- CSDT-B Sample Pump (SP-223), and
- MSTT Sample Pump (SP-224).

Failure of components (i.e., pumps or valves) in this area require prior flushing and draining to minimize the spread of contamination and the potential for exposure to alpha-emitting isotopes.

Recovery procedures for a failed pump or failed valve will follow the same general procedure. The radiation fields are expected to be low in the AFF. Therefore, the equipment can be contact-evaluated and potentially be contact-maintained (e.g., motor or actuator replacement) prior to flushing. However, if a line break is required, the affected item will need to be flushed/drained. Depending on the failure, either complete draining or complete flushing of the affected system may not be able to be completed. If one method (i.e., draining or flushing) cannot be completed, the other method should be able to be completed. The degree of flushing or draining that can be accomplished will dictate what other precautions are needed (e.g., supplied air respirator or air purifying respirator). If leakage has occurred, the area will need to be flushed into the nearest dike area sump. Once the material is collected in the sump, the sump will need to be pumped out and flushed.

Other Major Components

Other major components outlined in Section 3.3.2 are discussed in their respective SDs.

3.4.5 System Shutdown

For extended shutdown or maintenance activities, the system is completely flushed with water and drained. Manual and actuated flush valves are used to flush the system prior to shutting down or laying up for an extended shutdown. The system is drained by using the actuated or manual drain valves.

4.0 SAMPLING USING THE MANUAL SAMPLERS

4.1 System Function

The main system function is to provide a representative sample.

4.2 Operational Overview

The purpose of the manual samplers is to provide a mechanism to pull a sample from the process vessels or process line. The sample is then analyzed by laboratory personnel.

4.3 Configuration Information

4.3.1 Description of System

Refer to the P&IDs listed in Table 4-1.

Table 4-1. P&IDs

Diagram Number	Diagram Title
M-M6-J-0058	***SWPF Process Building Contactor Drain Header P&ID (U)***[122]
M-M6-J-0069	*SWPF Process Building Neutralization Tank P&ID (U)*[123]
M-M6-J-0074	*SWPF Process Building MST Storage Tank TK-311 P&ID (U)*[124]

Table 4-1. P&IDs (cont.)

Diagram Number	Diagram Title
M-M6-J-0075	*SWPF Process Building Filter Cleaning Caustic Tank TK-107 P&ID (U)*[125]
M-M6-J-0076 SH1	*SWPF Process Building Process Water Tank TK-301 P&ID (U)*[126]
M-M6-J-0078	*SWPF Process Building DI Water Generation and Storage IX-312/TK-312 P&ID (U)*[127]
M-M6-J-0079	*SWPF Process Building Caustic Receipt Tank TK-302 P&ID (U)*[128]
M-M6-J-0080	*SWPF Process Building Nitric Acid Receipt Tank TK-304 P&ID (U)*[129]
M-M6-J-0081	*SWPF Process Building Strip Feed Pumps P-310A/B P&ID (U)*[130]
M-M6-J-0082	*SWPF Process Building Nitric Acid Scrub Makeup Tank TK-307 P&ID (U)*[131]
M-M6-J-0083	*SWPF Process Building Solvent Makeup Tank TK-313 P&ID (U)*[132]
M-M6-J-0116	*SWPF Process Building Filter Cleaning Acid Feed Tank TK-106 P&ID (U)*[133]
M-M6-J-0124	*SWPF Process Building Caustic Dilution Feed Tank TK-108 P&ID (U)*[134]
M-M6-J-0125	*SWPF Process Building Caustic Makeup Tank TK-303 P&ID (U)*[135]
M-M6-J-0148	***SWPF Process Building DSS Coalescer TK-201 P&ID (U)***[136]
M-M6-J-0156	*SWPF Process Building Drum Off/Decon Area Sump P&ID (U)*[137]
M-M6-J-0174	*SWPF Alpha Finishing Facility Lab Collection Tank B TK-237 and P-236 P&ID (U)*[138]
M-M6-J-0201	***SWPF Next Generation Solvent Building Boric Acid Strip Receipt Tank TK-710 P&ID (U)***[139]
M-M6-J-0202	***SWPF Next Generation Solvent Building Boric Acid Strip Feed Tank TK-720 P&ID (U)***[140]
M-M6-J-0203	***SWPF Next Generation Solvent Building Caustic Scrub Feed Tank TK-730 P&ID (U)***[141]

4.3.2 Major Components

Refer to X-SD-J-00003[8] **and X-SD-J-00008**[11] for the major components related to the manual samplers.

4.3.3 Stream Data

Refer to X-SD-J-00003[8] **and X-SD-J-00008**[11] for stream information related to the manual samplers.

4.3.4 Physical Location and Layout

The manual samplers are ½" spring return ball valves. These valves are classified as Specialty Items (SI) and are specified in P-DS-J-00172, *SWPF Specialty Item Spring Return Ball Valve*[142]

and P-DS-J-00647, *SWPF Specialty Item Spring Return Ball Valve*[143]. These manual samplers are used to pull samples from the following locations:

- SI-522 at the Monosodium Titanate Storage Tank (TK-311),
- SI-523 at the Filter Cleaning Caustic Tank (TK-107),
- SI-524 at the Nitric Acid Receipt Tank (TK-304),
- SI-525 at the Nitric Acid Scrub Makeup Tank (TK-307),
- SI-526 at the Caustic Makeup Tank (TK-303),
- SI-527 at the Caustic Dilution Feed Tank (TK-108),
- SI-528 at the Deionized Water Storage Tank (TK-312) recirculation line,
- SI-529 at the Neutralization Tank (TK-317) recirculation line,
- SI-535 at the Process Water Tank (TK-301) recirculation line,
- SI-536 at the Caustic Receipt Tank (TK-302) recirculation line,
- SI-537 at the exit of Strip In-line Mixer MIX-310A,
- SI-538 at the exit of Strip In-line Mixer MIX-310B,
- SI-539 at the Solvent Makeup Tank (TK-313),
- SI-543 at the Filter Cleaning Acid Feed Tank (TK-106),
- SI-545 at the Drum Off/Decon Area Sump (SMP-605) recirculation line,
- SI-546 at the Lab Collection Tank-B (TK-237) recirculation line**,**
- **SI-818 at the CSSX Contactor Drain Header Loop Seal,**
- **SI-819 at the DSS Coalescer (TK-201) aqueous outlet,**
- **SI-7001 at the Boric Acid Strip Receipt Tank (TK-710),**
- **SI-7002 at the Boric Acid Strip Feed Tank (TK-720), and**
- **SI-7003 at the Caustic Scrub Feed Tank (TK-730).**

Other Major Components

Other major components (pumps, tanks) are discussed in X-SD-J-00003[8] **and X-SD-J-00008**[11]. In general, sampling is accomplished as a minor function of the main process equipment.

4.3.5 System Control Features and Interlocks

4.3.5.1 System Monitoring

There is no instrumentation related to the manual samplers.

4.3.5.2 Control Functions

There are no control loops related to the manual samplers.

4.4 Operations

4.4.1 Initial Configuration

The manual samplers are closed.

4.4.2 System Start-up

The Operator initiates sampling by opening the manual sampler. Upon release, the manual sampler closes (spring return ball valve).

4.4.3 Normal Operations

See Section 4.4.2.

4.4.4 Off-Normal and Recovery Operation

The only postulated failure events identified with the manual samplers is an inoperable valve.

4.4.5 System Shutdown

See Section 4.4.2.

5.0 MISCELLANEOUS

To support sampling for SWPF operation, the analytical laboratory contains various equipment and instrumentation that are portable and replaceable (refer to P-FDD-J-00001[17] for a listing anticipated required devices). This equipment is purposely not maintained within the SWPF Master Equipment List (see PP-EN-5042[15]), as it is not considered permanent plant equipment.

6.0 REFERENCES

[1] **E-SD-J-00002, *SWPF Electrical System Description, Revision 0.* Parsons, Aiken, South Carolina.**

[2] J-SD-J-00002, *SWPF Instrumentation and Controls System Description*, **Revision 4**. Parsons, Aiken, South Carolina.

[3] **M-SD-J-00005, *SWPF Utilities System Description*, Revision 0. Parsons, Aiken, South Carolina.**

[4] **M-SD-J-00004, *SWPF Heating, Ventilating, and Air Conditioning System Description*. Parsons, Aiken, South Carolina.**

[5] **M-SD-J-00006, *SWPF Material Handling System Description*. Parsons, Aiken, South Carolina.**

[6] X-SD-J-00001, *SWPF Alpha Strike Process System Description*, **Revision 1**. Parsons, Aiken, South Carolina.

[7] X-SD-J-00002, *SWPF Caustic-side Solvent Extraction System Description*, **Revision 2**. Parsons, Aiken, South Carolina.

[8] X-SD-J-00003, *SWPF Cold Chemicals Area System Description*, **Revision 1**. Parsons, Aiken, South Carolina.

[9] X-SD-J-00004, *SWPF Alpha Finishing Process System Description*, **Revision 1**. Parsons, Aiken, South Carolina.

[10] X-SD-J-00005, *SWPF Drains System Description*, **Revision 2**. Parsons, Aiken, South Carolina.

[11] **X-SD-J-00008, *SWPF Next Generation Solvent System Description*. Parsons, Aiken, South Carolina.**

[12] **X-SD-J-00009, *SWPF Caustic-side Solvent Extraction with Next Generation Solvent (NGS) System Description*. Parsons, Aiken South Carolina.**

[13] S-SAR-J-**00002**, *SWPF Documented Safety Analysis*. Parsons, Aiken, South Carolina.

[14] P-DB-J-00002, *SWPF Design Criteria Database*. Parsons, Aiken, South Carolina.

[15] ***Salt Waste Processing Facility Project Procedures Manual.* Parsons, Aiken, South Carolina.**

[16] **P-CDM-J-00001, *Configuration Management Plan.* Parsons, Aiken, South Carolina.**

[17] P-FDD-J-00001, *SWPF Analytical Laboratory Design Requirements*. Parsons, Aiken, South Carolina.

[18] M-M6-J-0005, *SWPF Process Building Alpha Sorption Tank-A TK-101 P&ID (U)*. Parsons, Aiken, South Carolina.

[19] M-M6-J-0102, *SWPF Process Building Lab Hot Cell #1 TK-101 and TK-205 Samplers P&ID (U)*. Parsons, Aiken, South Carolina.

[20] M-M6-J-0143, *SWPF Process Building Process Sampler Detail P&ID (U)*. Parsons, Aiken, South Carolina.

[21] M-M6-J-0151, *SWPF Process Building Sample Pumps SP-101, SP-109, and SP-205 P&ID (U)*. Parsons, Aiken, South Carolina.

[22] M-M6-J-0160, *SWPF Process Building ASP and CSSX North Flush Header P&ID (U)*. Parsons, Aiken, South Carolina.

[23] M-M6-J-0007, *SWPF Process Building Filter Feed Tank-A TK-102 P&ID (U)*. Parsons, Aiken, South Carolina.

[24] M-M6-J-0103, *SWPF Process Building Lab Hot Cell #1 TK-104 and TK-102 Samplers P&ID (U)*. Parsons, Aiken, South Carolina.

[25] M-M6-J-0152, *SWPF Process Building Sample Pumps SP-102, SP-103 and SP-235 P&ID (U)*. Parsons, Aiken, South Carolina.

[26] M-M6-J-0019, *SWPF Process Building Cleaning Solution Dump Tank-A TK-103 P&ID (U)*. Parsons, Aiken, South Carolina.

[27] M-M6-J-0107, *SWPF Process Building Lab Hot Cell #2 TK-103 and Process Cell Sumps Samplers P&ID (U)*. Parsons, Aiken, South Carolina.

[28] M-M6-J-0014, *SWPF Process Building Sludge Solids Receipt Tank TK-104 P&ID (U)*. Parsons, Aiken, South Carolina.

[29] M-M6-J-0153, *SWPF Process Building Sample Pumps SP-104 and SP-105 P&ID (U)*. Parsons, Aiken, South Carolina.

[30] M-M6-J-0017, *SWPF Process Building Wash Water Hold Tank TK-105 P&ID (U)*. Parsons, Aiken, South Carolina.

[31] M-M6-J-0105, *SWPF Process Building Lab Hot Cell #1 TK-105 Sampler P&ID (U)*. Parsons, Aiken, South Carolina.

[32] M-M6-J-0030, *SWPF Process Building Salt Solution Feed Tank TK-109 P&ID (U)*. Parsons, Aiken, South Carolina.

[33] M-M6-J-0032, *SWPF Process Building Strip Effluent Hold Tank TK-205 P&ID (U)*. Parsons, Aiken, South Carolina.

[34] M-M6-J-0104, *SWPF Process Building Lab Hot Cell #1 TK-601 and TK-109 Samplers P&ID (U)*. Parsons, Aiken, South Carolina.

[35] M-M6-J-0113, *SWPF Process Building Lab Drain Tank TK-235 P&ID (U)*. Parsons, Aiken, South Carolina.

[36] M-M6-J-0108, *SWPF Process Building Lab Hot Cell #2 TK-127, SMP-206, and TK-235 Samplers P&ID (U)*. Parsons, Aiken, South Carolina.

[37] M-M6-J-0048 SH1, *SWPF Alpha Finishing Facility DSS Hold Tank TK-207 P&ID (U)*. Parsons, Aiken, South Carolina.

[38] M-M6-J-0110, *SWPF Process Building Lab Glovebox #8 TK-207, TK-220, and TK-221 Samplers P&ID (U)*. Parsons, Aiken, South Carolina.

[39] M-M6-J-0149, SWPF Alpha Finishing Facility Recovered Solvent Filters P&ID (U). Parsons, Aiken, South Carolina.

[40] M-M6-J-0154, *SWPF Alpha Finishing Facility Sample Pumps SP-207, SP-220, SP-221 P&ID (U)*. Parsons, Aiken, South Carolina.

[41] M-M6-J-0049 SH1, *SWPF Alpha Finishing Facility Intermediate Storage Tank TK-220 P&ID (U)*. Parsons, Aiken, South Carolina.

[42] M-M6-J-0050 SH1, *SWPF Alpha Finishing Facility Alpha Sorption Tank-B TK-221 P&ID (U)*. Parsons, Aiken, South Carolina.

[43] M-M6-J-0051 SH1, *SWPF Alpha Finishing Facility Filter Feed Tank-B TK-222 P&ID (U)*. Parsons, Aiken, South Carolina.

[44] M-M6-J-0111, *SWPF Process Building Lab Glovebox #9 TK-222 and TK-223 Samplers P&ID (U)*. Parsons, Aiken, South Carolina.

[45] M-M6-J-0155, *SWPF Alpha Finishing Facility Sample Pumps SP-222, SP-223, SP-224 P&ID (U)*. Parsons, Aiken, South Carolina.

[46] M-M6-J-0055 SH2, *SWPF Alpha Finishing Facility Cleaning Solution Dump Tank-B TK-223 P&ID (U)*. Parsons, Aiken, South Carolina.

[47] M-M6-J-0056 SH1, *SWPF Alpha Finishing Facility MST/Sludge Transfer Tank TK-224 P&ID (U)*. Parsons, Aiken, South Carolina.

[48] M-M6-J-0112, *SWPF Process Building Lab Glovebox #9 TK-224 and TK-228 Samplers P&ID (U)*. Parsons, Aiken, South Carolina.

[49] M-M6-J-0061, *SWPF Process Building Alpha Sorption Drain Tank TK-601 P&ID (U)*. Parsons, Aiken, South Carolina.

[50] M-M6-J-0062 SH 1, *SWPF Process Building Alpha Sorption Drain Tank Transfer Pumps P-601A/B P&ID (U)*. Parsons, Aiken, South Carolina.

[51] M-M6-J-0062 SH 2, *SWPF Process Building Alpha Sorption Drain Tank Transfer Pumps P-601A/B Piping P&ID (U)*. Parsons, Aiken, South Carolina.

[52] M-M6-J-0115, *SWPF Process Building Spent Acid Storage Tank TK-127 P&ID (U)*. Parsons, Aiken, South Carolina.

[53] M-M6-J-0046 SH1, *SWPF Process Building Solvent Hold Tank TK-202 P&ID (U)*. Parsons, Aiken, South Carolina.

[54] M-M6-J-0046 SH2, *SWPF Process Building Solvent Feed Pumps P-202A/B P&ID (U)*. Parsons, Aiken, South Carolina.

[55] M-M6-J-0109, *SWPF Process Building Lab Hot Cell #2 TK-202 and TK-208 Samplers P&ID (U)*. Parsons, Aiken, South Carolina.

[56] M-M6-J-0047 SH2, *SWPF Process Building Ba-137 Decay Tank TK-206 P&ID (U)*. Parsons, Aiken, South Carolina.

[57] M-M6-J-0047 SH3, *SWPF Process Building Ba-137 Decay Tank Pumps P-206A/B P&ID (U)*. Parsons, Aiken, South Carolina.

[58] M-M6-J-0106, *SWPF Process Building Lab Hot Cell #2 TK-204 and TK-206 Samplers P&ID (U)*. Parsons, Aiken, South Carolina.

[59] M-M6-J-0043 SH2, *SWPF Process Building Caustic Wash Tank TK-204 P&ID (U)*. Parsons, Aiken, South Carolina.

[60] M-M6-J-0043 SH3, *SWPF Process Building Caustic Wash Pumps P-204A/B P&ID (U)*. Parsons, Aiken, South Carolina.

[61] M-M6-J-0120, *SWPF Process Building Solvent Drain Tank TK-208 P&ID (U)*. Parsons, Aiken, South Carolina.

[62] M-M6-J-0121 SH1, *SWPF Process Building Solvent Drain Tank Pumps P-208A/B P&ID (U)*. Parsons, Aiken, South Carolina.

[63] M-M6-J-0121 SH2, *SWPF Process Building Solvent Drain Tank Pumps P-208A/B Piping P&ID (U)*. Parsons, Aiken, South Carolina.

[64] M-M6-J-0101, *SWPF Process Building Lab Hot Cell #1 TK-215 and TK-217 Samplers P&ID (U)*. Parsons, Aiken, South Carolina.

[65] M-M6-J-0122 SH2, *SWPF Process Building Strip Effluent Pump Tank TK-215 P&ID (U)*. Parsons, Aiken, South Carolina.

[66] M-M6-J-0123, *SWPF Process Building Strip Effluent Pump Tank Pumps P-215A/B P&ID (U)*. Parsons, Aiken, South Carolina.

[67] M-M6-J-0060 SH1, *SWPF Process Building Solvent Strip Feed Tank TK-217 P&ID (U)*. Parsons, Aiken, South Carolina.

[68] M-M6-J-0060 SH2, *SWPF Process Building Solvent Strip Feed Tank Pumps P-217A/B P&ID (U)*. Parsons, Aiken, South Carolina.

[69] M-M6-J-0063, *SWPF Alpha Finishing Facility Alpha Finishing Drain Tank TK-228 P&ID (U)*. Parsons, Aiken, South Carolina.

[70] M-M6-J-0126, *SWPF Process Building West CSSX Tank Cell Sump P&ID (U)*. Parsons, Aiken, South Carolina.

[71] M-M6-J-0150, *SWPF Process Building East CSSX Tank Cell Sump P&ID (U)*. Parsons, Aiken, South Carolina.

[72] M-M6-J-0020 SH3, *SWPF Process Building ASP Sump Transfer Pump P-110 P&ID (U)*. Parsons, Aiken, South Carolina.

[73] J-JZ-J-00635, *SWPF FI**C**-1663 AST-A Sample Pump Flow*. Parsons, Aiken, South Carolina.

[74] J-JZ-J-01102, *SWPF SIC-1667 AST-A Sample Pump Speed*. Parsons, Aiken, South Carolina.

[75] J-JZ-J-00638, *SWPF FI**C**-1656 FFT-A Sample Pump Flow*. Parsons, Aiken, South Carolina.

[76] J-JZ-J-01076, *SWPF SIC-1661 FFT-A Sample Pump Speed*. Parsons, Aiken, South Carolina.

[77] J-JZ-J-01103, *SWPF SIC-1688 CSDT-A Sample Pump Speed*. Parsons, Aiken, South Carolina.

[78] J-JZ-J-00639, *SWPF FI**C**-1699 CSDT-A Sample Pump Flow*. Parsons, Aiken, South Carolina.

[79] J-JZ-J-01104, *SWPF SIC-1694 SSRT Sample Pump Speed*. Parsons, Aiken, South Carolina.

[80] J-JZ-J-00641, *SWPF FI**C**-1696 SSRT Sample Pump Flow*. Parsons, Aiken, South Carolina.

[81] J-JZ-J-01107, *SWPF SIC-1764 WWHT Sample Pump Speed*. Parsons, Aiken, South Carolina.

[82] J-JZ-J-00642, *SWPF FI**C**-1766 WWHT Sample Pump Flow*. Parsons, Aiken, South Carolina.

[83] J-JZ-J-01105, *SWPF SIC-1704 SSFT Sample Pump Speed*. Parsons, Aiken, South Carolina.

[84] J-JZ-J-01106, *SWPF SIC-1714 SEHT Sample Pump Speed*. Parsons, Aiken, South Carolina.

[85] J-JZ-J-01108, *SWPF SIC-1835 Lab Drain Tank Sample Pump Speed*. Parsons, Aiken, South Carolina.

[86] J-JZ-J-01122, *SWPF SIC-2226 DSSHT Sample Pump Speed*. Parsons, Aiken, South Carolina.

[87] J-JZ-J-01211, *SWPF SIC-7016 IST Sample Pump Speed*. Parsons, Aiken, South Carolina.

[88] J-JZ-J-01212, *SWPF SIC-7053 AST-B Sample Pump Speed*. Parsons, Aiken, South Carolina.

[89] J-JZ-J-01213, *SWPF SIC-7062 FFT-B Sample Pump Speed*. Parsons, Aiken, South Carolina.

[90] J-JZ-J-01221, *SWPF SIC-7163 CSDT-B Sample Pump Speed*. Parsons, Aiken, South Carolina.

[91] J-JZ-J-00648, *SWPF FI-1849 MSTT Sample Pump Flow*. Parsons, Aiken, South Carolina.

[92] J-JZ-J-01222, *SWPF SIC-7207 MST/Sludge Transfer Tank Sample Pump Speed*. Parsons, Aiken, South Carolina.

[93] J-JZ-J-00538, *SWPF FIC-7283 ASDT Sample Flow*. Parsons, Aiken, South Carolina.

[94] J-JZ-J-00539, *SWPF FIC-7285 SAST Sample Flow*. Parsons, Aiken, South Carolina.

[95] J-JZ-J-00592, *SWPF TIC-1823 Solvent Adj HX-250 Disch Temp*. Parsons, Aiken, South Carolina.

[96] J-JZ-J-00447, *SWPF FIC-2137 Solvent Feed Pump B Sample Flow*. Parsons, Aiken, South Carolina.

[97] J-JZ-J-00448, *SWPF FIC-2138 Solvent Feed Pump A Sample Flow*. Parsons, Aiken, South Carolina.

[98] J-JZ-J-00455, *SWPF FIC-2182 BDT Xfer Pump A Sample Flow*. Parsons, Aiken, South Carolina.

[99] J-JZ-J-00456, *SWPF FIC-2187 BDT Xfer Pump B Sample Flow*. Parsons, Aiken, South Carolina.

[100] J-JZ-J-00440, *SWPF FIC-2075 Caustic Wash Tank Pump B Sample Flow*. Parsons, Aiken, South Carolina.

[101] J-JZ-J-00441, *SWPF FIC-2084 Caustic Wash Tank Pump A Sample Flow*. Parsons, Aiken, South Carolina.

[102] J-JZ-J-00612, *SWPF FIC-2046 Solvent Drain Tank Pump A Sample Flow*. Parsons, Aiken, South Carolina.

[103] J-JZ-J-00613, *SWPF FIC-2117 Solvent Drain Tank Pump B Sample Flow*. Parsons, Aiken, South Carolina.

[104] J-JZ-J-00617, *SWPF FIC-2057 SEPT Pump A Sample Flow*. Parsons, Aiken, South Carolina.

[105] J-JZ-J-00618, *SWPF FIC-2065 SEPT Pump B Sample Flow*. Parsons, Aiken, South Carolina.

[106] J-JZ-J-00528, *SWPF FIC-2191 Solvent Strip Feed Pump A Sample Flow*. Parsons, Aiken, South Carolina.

[107] J-JZ-J-00529, *SWPF FIC-2195 Solvent Strip Feed Pump B Sample Flow*. Parsons, Aiken, South Carolina.

[108] J-JZ-J-00541, *SWPF FIC-7230 AFDT Discharge Flow*. Parsons, Aiken, South Carolina.

[109] J-JZ-J-00636, *SWPF FI**C**-1707 SSFT Sample Pump Flow*. Parsons, Aiken, South Carolina.

[110] J-JZ-J-00637, *SWPF FI**C**-1716 SEHT Sample Pump Flow*. Parsons, Aiken, South Carolina.

[111] J-JZ-J-00640, *SWPF FI-1838 LDT Sample Pump Flow*. Parsons, Aiken, South Carolina.

[112] J-JZ-J-00643, *SWPF FI**C**-1863 DSSHT Sample Pump Flow*. Parsons, Aiken, South Carolina.

[113] J-JZ-J-00644, *SWPF FI-1864 IST Sample Pump Flow*. Parsons, Aiken, South Carolina.

[114] J-JZ-J-00645, *SWPF FI-1868 AST-B Sample Pump Flow*. Parsons, Aiken, South Carolina.

[115] J-JZ-J-00646, *SWPF FI**C**-1844 FFT-B Sample Pump Flow*. Parsons, Aiken, South Carolina.

[116] J-JZ-J-00647, *SWPF FI**C**-1848 CSDT-B Sample Pump Flow*. Parsons, Aiken, South Carolina.

[117] X-PCD-J-00006, *SWPF Automation Functional Control Sequence for: Sampling Systems*. Parsons, Aiken, South Carolina.

[118] X-PCD-J-00001, *SWPF Automation Functional Control Sequence for: Caustic-side Solvent Extraction*. Parsons, Aiken, South Carolina.

[119] X-PCD-J-00003, *SWPF* Automation Functional Control Sequence for: Alpha Finishing Process. *Parsons, Aiken, South Carolina.*

[120] X-PCD-J-00004, *SWPF Automation Functional Control Sequence for: Alpha Strike Process*. Parsons, Aiken, South Carolina.

[121] X-PCD-J-00005, *SWPF Automation Functional Control Sequence for: Drains*. Parsons, Aiken, South Carolina.

[122] M-M6-J-0058, *SWPF Process Building Contactor Drain Header P&ID (U)*. Parsons, Aiken, South Carolina.

[123] M-M6-J-0069, *SWPF Process Building Neutralization Tank P&ID (U)*. Parsons, Aiken, South Carolina.

[124] M-M6-J-0074, *SWPF Process Building MST Storage Tank TK-311 P&ID (U)*. Parsons, Aiken, South Carolina.

[125] M-M6-J-0075, *SWPF Process Building Filter Cleaning Caustic Tank TK-107 P&ID (U)*. Parsons, Aiken, South Carolina.

[126] M-M6-J-0076 SH1, *SWPF Process Building Process Water Tank TK-301 P&ID (U)*. Parsons, Aiken, South Carolina.

[127] M-M6-J-0078, *SWPF Process Building DI Water Generation and Storage IX-312/TK-312 P&ID (U)*. Parsons, Aiken, South Carolina.

[128] M-M6-J-0079, *SWPF Process Building Caustic Receipt Tank TK-302 P&ID (U)*. Parsons, Aiken, South Carolina.

[129] M-M6-J-0080, *SWPF Process Building Nitric Acid Receipt Tank TK-304 P&ID (U)*. Parsons, Aiken, South Carolina.

[130] M-M6-J-0081, *SWPF Process Building Strip Feed Pumps P-310A/B P&ID (U)*. Parsons, Aiken, South Carolina.

[131] M-M6-J-0082, *SWPF Process Building Nitric Acid Scrub Makeup Tank TK-307 P&ID (U)*. Parsons, Aiken, South Carolina.

[132] M-M6-J-0083, *SWPF Process Building Solvent Makeup Tank TK-313 P&ID (U)*. Parsons, Aiken, South Carolina.

[133] M-M6-J-0116, *SWPF Process Building Filter Cleaning Acid Feed Tank TK-106 P&ID (U)*. Parsons, Aiken, South Carolina.

[134] M-M6-J-0124, *SWPF Process Building Caustic Dilution Feed Tank TK-108 P&ID (U)*. Parsons, Aiken, South Carolina.

[135] M-M6-J-0125, *SWPF Process Building Caustic Makeup Tank TK-303 P&ID (U)*. Parsons, Aiken, South Carolina.

[136] M-M6-J-0058, *SWPF Process Building DSS Coalescer TK-201 P&ID (U)*. Parsons, Aiken South Carolina.

[137] M-M6-J-0156, *SWPF Process Building Drum Off/Decon Area Sump P&ID (U)*. Parsons, Aiken, South Carolina.

[138] M-M6-J-0174, *SWPF Alpha Finishing Facility Lab Collection Tank B TK-237 and P-236 P&ID (U)*. Parsons, Aiken, South Carolina.

[139] M-M6-J-0201, *SWPF Next Generation Solvent Building Boric Acid Strip Receipt Tank TK-710 P&ID (U)*. Parsons, Aiken, South Carolina.

[140] M-M6-J-0202, *SWPF Next Generation Solvent Building Boric Acid Strip Feed Tank TK-720 P&ID (U)*. Parsons, Aiken, South Carolina.

[141] M-M6-J-0203, *SWPF Next Generation Solvent Building Caustic Scrub Feed Tank TK-730 P&ID (U)*. Parsons, Aiken, South Carolina.

[142] P-DS-J-00172, *SWPF Specialty Item Spring Return Ball Valve*. Parsons, Aiken, South Carolina.

[143] P-DS-J-00674, *SWPF Specialty Item Spring Return Ball Valve*. Parsons, Aiken, South Carolina.