X-SD-J-00005
Rev. 3
Date: October 21, 2019

SALT WASTE PROCESSING FACILITY

DRAINS

SYSTEM DESCRIPTION

Prepared, reviewed, and accepted by:

10/21/19

Anthony Edwards
SWPF Cognizant System Engineer
Date

William Bayne Brasel ORC96176.ID Digitally signed by William Bayne Brasel ORC96176.ID Date: 2019.10.21 11:04:17 -04'00'

Bill Brasel
SWPF Engineering Integration Manager
Date

10/22/19

Dr. Thomas D. Burns, Jr., P.E.
SWPF Director of Engineering
Date

SUMMARY OF CHANGES

Revision No.	Date	Description of Change
0	05/20/08	Issued for Enhanced Final Design
1	08/06/2015	Incorporates DCN-0641. Revise per DCN-1476.
2	10/16/2017	Revise per DCN-1954.
3	10/21/2019	Revise per DCN-1922, DCN-2039, DCN-7015, DCN-1958, Rev. 3, DCN-2154, DCN-2101, and DCN-2213.

TABLE OF CONTENTS

1.0 SCOPE 1

2.0 GENERAL OVERVIEW 2

3.0 ASDT (TK-601) 9

3.1 System Functions 9
3.2 Operational Overview 9
3.3 Configuration Information 11
3.3.1 Description of System 11
3.3.2 Major Components 12
3.3.3 Stream Data 15
3.3.4 Physical Location and Layout 15
3.3.5 System Control Features and Interlocks 16
3.4 Operations 21
3.4.1 Initial Configuration 21
3.4.2 System Startup 21
3.4.3 Normal Operations 22
3.4.4 Off-Normal and Recovery Operation 24
3.4.5 System Shutdown 24

4.0 CAUSTIC-SIDE SOLVENT EXTRACTION SUMPS 25

4.1 System Functions 25
4.2 Operational Overview 25
4.3 Configuration Information 27
4.3.1 Description of System 27
4.3.2 Major Components 28
4.3.3 Stream Data 29
4.3.4 Physical Location and Layout 29
4.3.5 System Control Features and Interlocks 30
4.4 Operations 31
4.4.1 Initial Configuration 31
4.4.2 System Startup 31
4.4.3 Normal Operations 31
4.4.4 Off-Normal and Recovery Operation 32
4.4.5 System Shutdown 32

5.0 SAST (TK-127) 33

5.1 System Functions 33
5.2 Operational Overview 33
5.3 Configuration Information 33
5.3.1 Description of System 33

TABLE OF CONTENTS (cont.)

5.3.2 Major Components 33
5.3.3 Stream Data 34
5.3.4 Physical Location and Layout 34
5.3.5 System Control Features and Interlocks 34
5.4 Operations 37
5.4.1 Initial Configuration 37
5.4.2 System Startup 37
5.4.3 Normal Operations 37
5.4.4 Off-Normal and Recovery Operation 38
5.4.5 System Shutdown 38

6.0 AFDT (TK-228) 39

6.1 System Functions 39
6.2 Operational Overview 39
6.3 Configuration Information 40
6.3.1 Description of System 40
6.3.2 Major Components 40
6.3.3 Stream Data 42
6.3.4 Physical Location and Layout 42
6.3.5 System Control Features and Interlocks 42
6.4 Operations 44
6.4.1 Initial Configuration 44
6.4.2 System Startup 44
6.4.3 Normal Operations 44
6.4.4 Off-Normal and Recovery Operation 45
6.4.5 System Shutdown 46

7.0 LAB DRAIN TANK (TK-235) 46

7.1 System Functions 46
7.2 Operational Overview 46
7.3 Configuration Information 47
7.3.1 Description of System 47
7.3.2 Major Components 47
7.3.3 Stream Data 48
7.3.4 Physical Location and Layout 48
7.3.5 System Control Features and Interlocks 48
7.4 Operations 49
7.4.1 Initial Configuration 49
7.4.2 System Startup 50
7.4.3 Normal Operations 50
7.4.4 Off-Normal and Recovery Operation 50

TABLE OF CONTENTS (cont.)

7.4.5 System Shutdown 50

8.0 LOW LEVEL DRAIN TANK (TK-604) 51

8.1 System Functions 51
8.2 Operational Overview 51
8.3 Configuration Information 51
8.3.1 Description of System 51
8.3.2 Major Components 51
8.3.3 Stream Data 52
8.3.4 Physical Location and Layout 52
8.3.5 System Control Features and Interlocks 52
8.4 Operations 53
8.4.1 Initial Configuration 53
8.4.2 System Startup 53
8.4.3 Normal Operations 54
8.4.4 Off-Normal and Recovery Operation 54
8.4.5 System Shutdown 54

9.0 DRUM OFF/DECON AREA SUMP 55

9.1 System Functions 55
9.2 Operational Overview 55
9.3 Configuration Information 55
9.3.1 Description of System 55
9.3.2 Major Components 55
9.3.3 Stream Data 56
9.3.4 Physical Location and Layout 56
9.3.5 System Control Features and Interlocks 56
9.4 Operations 57
9.4.1 Initial Configuration 57
9.4.2 System Startup 57
9.4.3 Normal Operations 57
9.4.4 Off-Normal and Recovery Operation 58
9.4.5 System Shutdown 58

10.0 LAB COLLECTION TANK-A (TK-236) AND LAB COLLECTION TANK-B (TK-237) 58

10.1 System Functions 58
10.2 Operational Overview 58
10.3 Configuration Information 59
10.3.1 Description of System 59

TABLE OF CONTENTS (cont.)

10.3.2 Major Components 59
10.3.3 Stream Data 60
10.3.4 Physical Location and Layout 60
10.3.5 System Control Features and Interlocks 60
10.4 Operations 61
10.4.1 Initial Configuration 61
10.4.2 System Startup 62
10.4.3 Normal Operations 62
10.4.4 Off-Normal and Recovery Operation 62
10.4.5 System Shutdown 63

11.0 SDT (TK-208) 63

11.1 System Functions 63
11.2 Operational Overview 64
11.2.1 Physical Location and Layout 66
11.3 Operations 69
11.3.1 Initial Configuration 69
11.3.2 System Startup 70
11.3.3 Normal Operations 70
11.3.4 Off-Normal and Recovery Operation 71
11.3.5 System Shutdown 72

12.0 REFERENCES 72

List of Figures

Figure 2-1. CPA Main Drainage 4
Figure 2-2. ASP Drain Schematic 5
Figure 2-3. AFP Drain Schematic 6
Figure 2-4. Low Level and Drum Off/Decon Area Drain Schematic 7
Figure 2-5. Caustic-side Solvent Extraction Process Drain Schematic 8
Figure 3-1. ASP P&VG Labyrinth Sump Design 11
Figure 4-1. CSSX Labyrinth Area Sump Design 27

List of Tables

Table 3-1. P&IDs and PFDs 12
Table 3-2. Major Components 13
Table 3-3. Streams 15

TABLE OF CONTENTS (cont.)

Table 3-4. ASDT System Monitoring Instrumentation 17
Table 3-5. Control Loops 21
Table 3-6. Failures/Malfunctions 24
Table 4-1. P&IDs and PFDs 28
Table 4-2. Major Components 28
Table 4-3. CSSX Sump System Monitoring Instrumentation 30
Table 4-4. Failures/Malfunctions 32
Table 5-1. P&IDs and PFDs 33
Table 5-2. Major Components 34
Table 5-3. Streams 34
Table 5-4. SAST System Monitoring Instrumentation 35
Table 5-5-5. Control Loops 37
Table 5-6. Failures/Malfunctions 38
Table 6-1. P&IDs 40
Table 6-2. Major Components 40
Table 6-3. AFDT System Monitoring Instrumentation 43
Table 6-6-4. Control Loops 44
Table 6-5. Failures/Malfunctions 45
Table 7-1. P&IDs and PFDs 47
Table 7-2. Major Components 47
Table 7-3. Lab Drain Tank System Monitoring Instrumentation 48
Table 7-4. Failures/Malfunctions 50
Table 8-1. P&IDs 51
Table 8-2. Major Components 52
Table 8-3. Streams 52
Table 8-4. Low Level Drain Tank System Monitoring Instrumentation 53
Table 8-5. Failures/Malfunctions 54
Table 9-1. P&IDs 55
Table 9-2. Major Components 56
Table 9-3. Streams 56
Table 9-4. Drum Off/Decon Area Sump System Monitoring Instrumentation 57
Table 9-5. Failures/Malfunctions 58
Table 10-1. P&IDs 59
Table 10-2. Major Components 59
Table 10-3. Streams 60
Table 10-4. Lab Collection Tank-A/B System Monitoring Instrumentation 60
Table 10-5. Failures/Malfunctions 63
Table 11-1. P&IDs and PFDs 65
Table 11-2. Major Components 65
Table 11-3. Solvent Drain Tank System Monitoring Instrumentation 66
Table 11-4. Control Loops 69
Table 11-5. Recovery Actions 71

ACRONYMS AND ABBREVIATIONS

%	Percent
°F	Degrees Fahrenheit
AFDT	Alpha Finishing Drain Tank (TK-228)
AFF	Alpha Finishing Facility
AFP	Alpha Finishing Process
ASDT	Alpha Sorption Drain Tank (TK-601)
ASP	Alpha Strike Process
AST-A	Alpha Sorption Tank-A (TK-101)
AST-B	Alpha Sorption Tank-B (TK-221)
BDT	Barium-137 Decay Tank (TK-206)
CFF	Cross-flow Filter
CPA	Central Processing Area
CR	Control Room
CSDT-A	Cleaning Solution Dump Tank-A (TK-103)
CSDT-B	Cleaning Solution Dump Tank-B (TK-223)
CSSX	Caustic-side Solvent Extraction
DCS	Distributed Control System
dP	Differential Pressure
DSS	Decontaminated Salt Solution
DSSHT	Decontaminated Salt Solution Hold Tank (TK-207)
FFT-A	Filter Feed Tank-A (TK-102)
FFT-B	Filter Feed Tank-B (TK-222)
ft	Feet/Foot
gpm	Gallons per Minute
HNO_3	Nitric Acid
hp	Horsepower
IST	Intermediate Storage Tank (TK-220)
M	Molar
MST	Monosodium Titanate
N/A	Not Applicable
Na^+	Sodium ion
NaOH	Sodium Hydroxide
OH^-	Hydroxide ion
P&ID	Piping and Instrumentation Diagram
P&VG	Pump and Valve Gallery
PFD	Process Flow Diagram
pH	hydrogen ion concentration
PVVS	Process Vessel Ventilation System
s.g.	Specific gravity
SDT	Solvent Drain Tank (TK-208)
SEHT	Strip Effluent Hold Tank (TK-205)
SHT	Solvent Hold Tank (TK-202)

ACRONYMS AND ABBREVIATIONS (cont.)

SAST	Spent Acid Storage Tank (TK-127)
SPF	Saltstone Production Facility
SQL	Structured Query Language
SS	Safety Significant
SSFT	Salt Solution Feed Tank (TK-109)
SSRT	Sludge Solids Receipt Tank (TK-104)
SWPF	Salt Waste Processing Facility
TK	Tank
T/T	Tangent-Tangent
wt%	Weight percent
WWHT	Wash Water Hold Tank (TK-105)

DEFINITIONS/GLOSSARY

There are no definitions or glossary items for this System Description.

1.0 SCOPE

The scope of this System Description is the Drains System and its related equipment.

The Drains System is segregated into the following sub-systems, depending on the effluent characteristics:

- Alpha Sorption Drain Tank (ASDT) (TK-601) provides collection, storage, and transfer of effluents from the Alpha Strike Process (ASP);
- Spent Acid Storage Tank (SAST) (TK-127) provides collection, storage, and transfer of spent solutions from chemical cleaning of the cross-flow filters (CFF) and pipework;
- Alpha Finishing Drain Tank (AFDT) (TK-228) provides collection, storage, and transfer of effluents from the Alpha Finishing Process (AFP);
- Lab Drain Tank (TK-235) provides collection, storage, and transfer of effluents generated from the Analytical Laboratory Hot Cells and gloveboxes;
- Low Level Drain Tank (TK-604) provides collection, storage, and transfer of low-level drains from various parts of the building;
- Drum Off/Decon Area Sump provides collection and transfer of solutions produced from decontamination activities; and
- Lab Collection Tank-A (TK-236) and Lab Collection Tank-B (TK-237) provide collection, storage, and transfer for drainage effluents from the Analytical Laboratory radio hoods, bench sinks, and scrubber blowdowns.
- Wet Sumps
- The Solvent Drain Tank (SDT) (TK-208) provides collection, storage, and transfer of effluents from the Caustic-side Solvent Extraction (CSSX) Process.

The Drains system interfaces with components in the following System Descriptions:

- E-SD-J-00002, *SWPF Electrical System Description*[1];
- J-SD-J-00002, *SWPF Instrumentation and Controls System Description*[2];
- M-SD-J-00005, *SWPF Utilities System Description*[3];
- X-SD-J-00001, *SWPF Alpha Strike Process System Description*[4];
- X-SD-J-00002, *SWPF Caustic-Side Solvent Extraction System Description*[5];
- X-SD-J-00003, *SWPF Cold Chemicals Area System Description*[6];
- X-SD-J-00004, *SWPF Alpha Finishing Process System Description*[7]; and
- X-SD-J-00006, *SWPF Sampling System Description*[8].

- X-SD-J-00009, *SWPF Caustic-side Solvent Extraction with Next Generation Solvent (NGS) System Description*[9]
- The safety analysis requirements related to system functions for this system are documented in Chapter 4 of S-SAR-J-00002, *SWPF Documented Safety Analysis*[10].
- The safety analysis requirements related to operability for this system are documented in Chapter 5 of S-SAR-J-00002[10].
- The discrete project design requirements for this system are documented in P-DB-J-00002, *SWPF Design Criteria Database*[11].

As Part of the maintenance of the SWPF Master Equipment list (see PP-EN-5042, *Master Equipment List*[12]), all permanent plant equipment is assigned a unique tag number. Each component (equipment, instrumentation, specialty item, etc.) is assigned to one (and only one) CSE system code. Structured Query Language (SQL) reports are generated (real time) off the controlled Master Equipment List. These are filterable by the CSE system. A complete listing of all components associated with this system can be found using the following reports, and filtering by DRAIN:

- MEL Cables
- MEL Equipment
- MEL Instruments
- MEL Lines
- MEL Manual Valves
- MEL Specialty Items

Similarly, all essential and support drawings are coded to the appropriate CSE system code (with only one code allowed per drawing). Using the following link: Drawing Category Status, a report may be generated for DRAIN and selecting the drawing type (Essential, Support). Reference drawings are not assigned System Codes and not required to be maintained current with facility modifications per PP-EN-5001[12] and P-CDM-J-00001, Configuration Management Plan[13].

2.0 GENERAL OVERVIEW

The Drains System collects process cleaning/flush effluents, overflows, and spillages generated by both routine and non-routine process plant operations in the Salt Waste Processing Facility (SWPF).

The system function is to provide a means of collecting, storing, chemically adjusting, sampling, and returning routine drain solutions to the SWPF process for treatment. The system also provides a means for draining process systems in case of a problem, in order that investigation/maintenance/repair can be carried out and plant operation restored.

Figure 2-1 is an overview schematic showing the main drainage routes from the Central Processing Area (CPA). Figure 2-2 is a schematic showing the ASP drainage routes to ASDT (TK-601), the routing into and out of the SAST (TK-127), and Analytical Laboratory wastes to the Lab Drain Tank (TK-235). Figure 2-3 is a schematic routing showing the AFP drainage routes to the AFDT (TK-228). Figure 2-3 also shows the schematic routing of drainage effluents from Analytical Laboratory bench sinks, radio hoods, and scrubber blowdowns into Lab Collection Tank-A (TK-236) and Lab Collection Tank-B (TK-237). Figure 2-4 shows the routing of low-level effluents to the Low Level Drain Tank (TK-604) and the routing of collected Drum Off/Decon Area solutions. Figure 2-5 is a schematic showing the CSSX drainage routes to the SDT (TK-208).

Figure 2-1. CPA Main Drainage

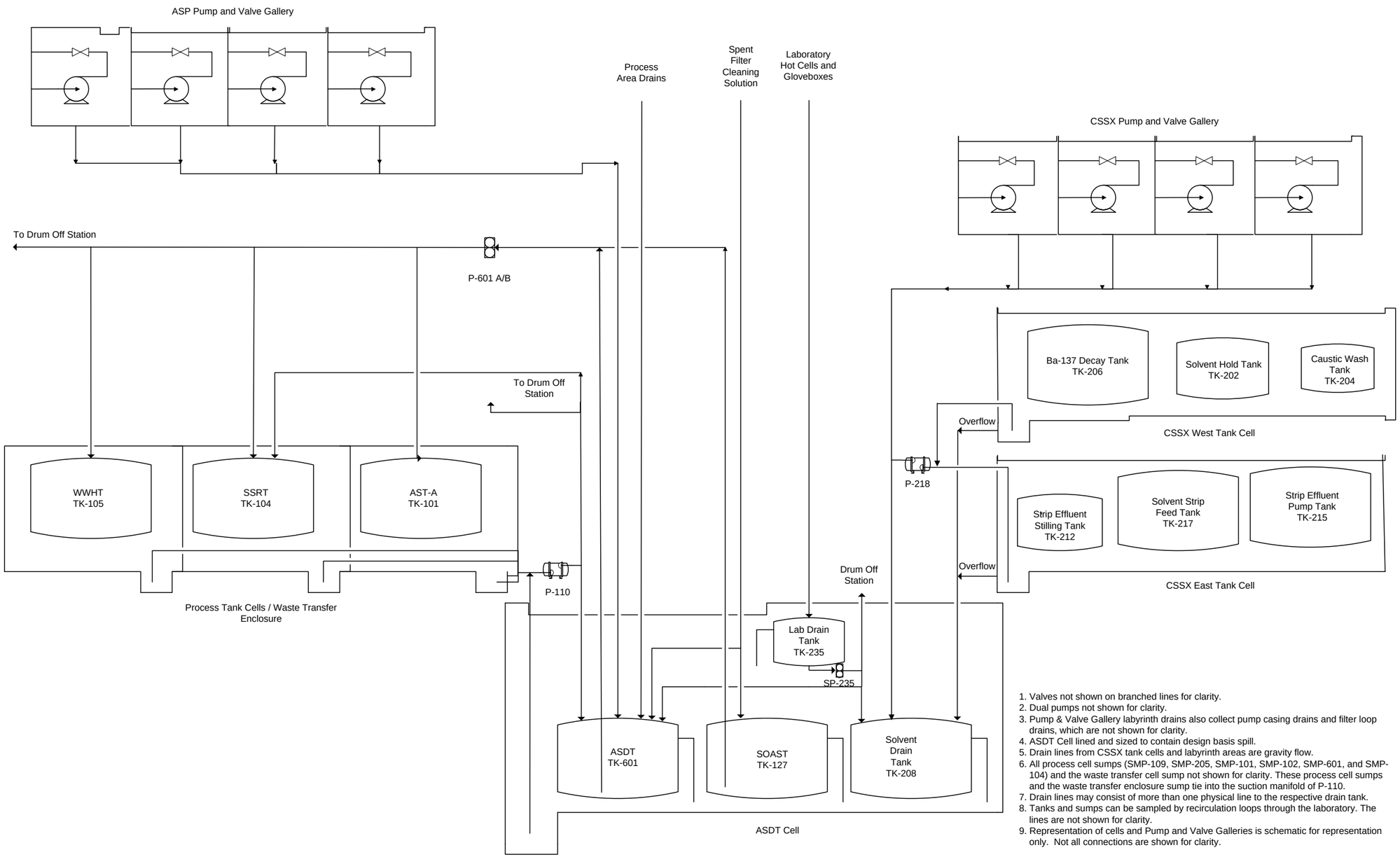

1. Valves not shown on branched lines for clarity.
2. Dual pumps not shown for clarity.
3. Pump & Valve Gallery labyrinth drains also collect pump casing drains and filter loop drains, which are not shown for clarity.
4. ASDT Cell lined and sized to contain design basis spill.
5. Drain lines from CSSX tank cells and labyrinth areas are gravity flow.
6. All process cell sumps (SMP-109, SMP-205, SMP-101, SMP-102, SMP-601, and SMP-104) and the waste transfer cell sump not shown for clarity. These process cell sumps and the waste transfer enclosure sump tie into the suction manifold of P-110.
7. Drain lines may consist of more than one physical line to the respective drain tank.
8. Tanks and sumps can be sampled by recirculation loops through the laboratory. The lines are not shown for clarity.
9. Representation of cells and Pump and Valve Galleries is schematic for representation only. Not all connections are shown for clarity.

Figure 2-2. ASP Drain Schematic

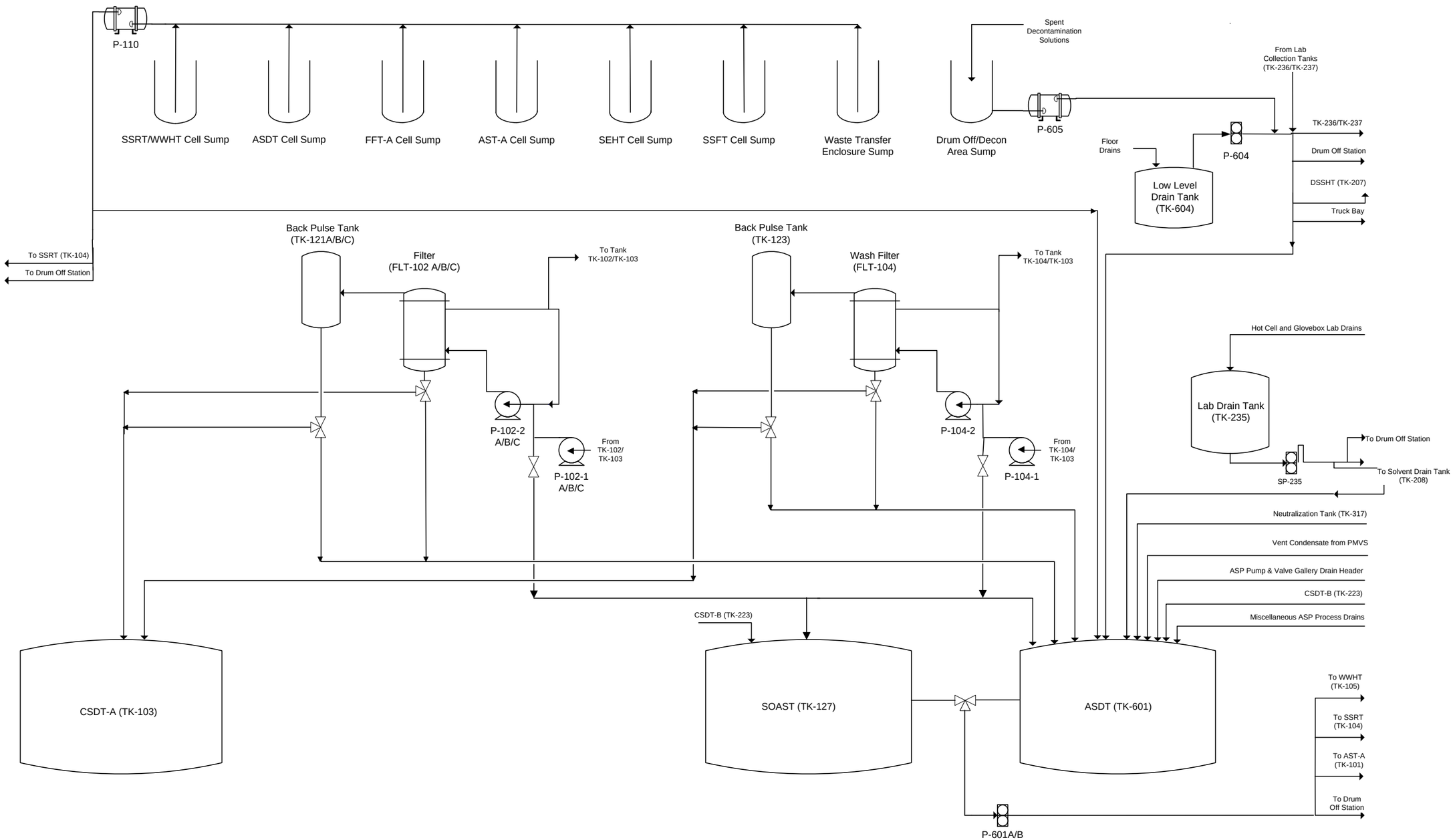

Figure 2-3. AFP Drain Schematic

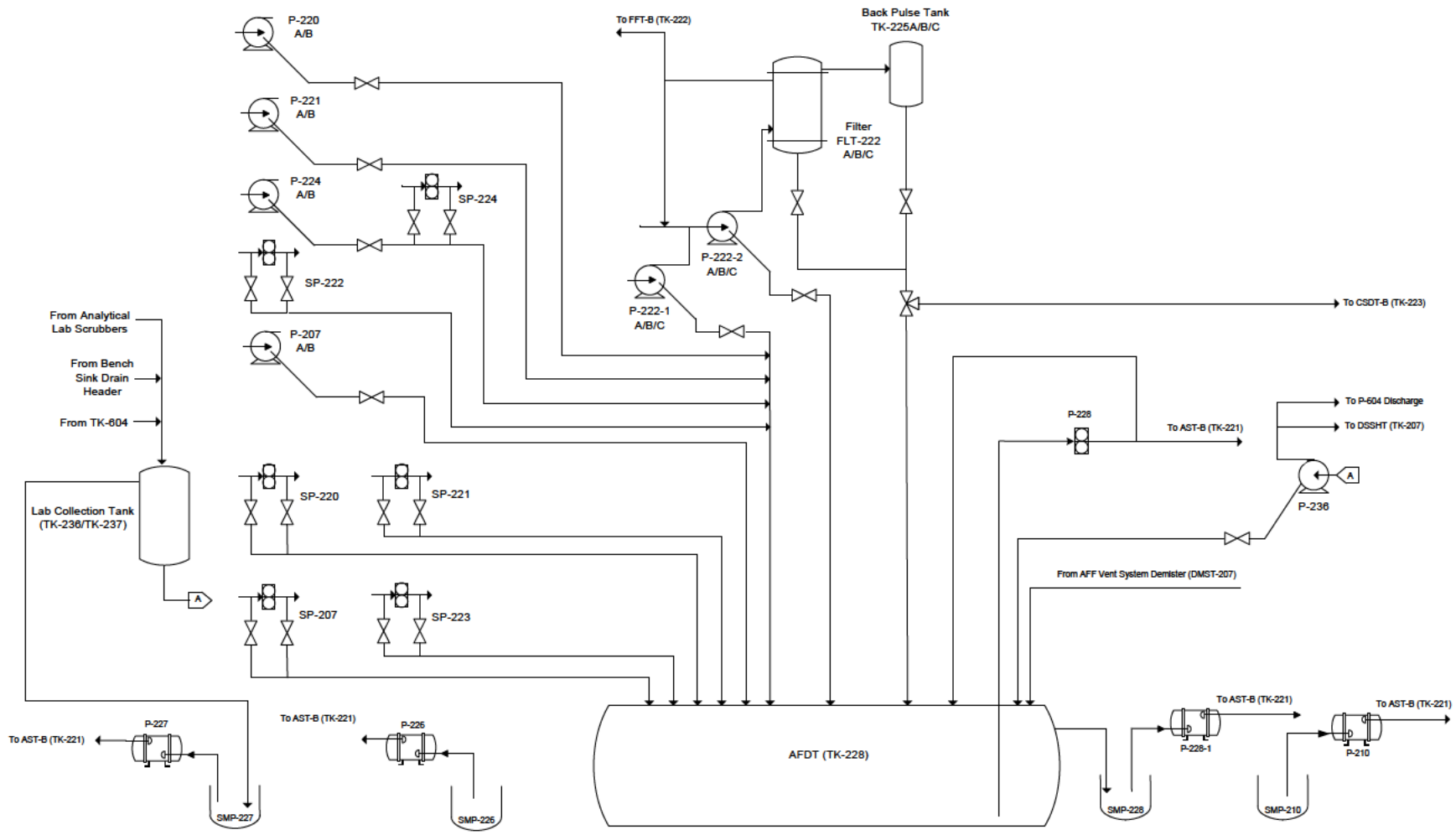

Figure 2-4. Low Level and Drum Off/Decon Area Drain Schematic

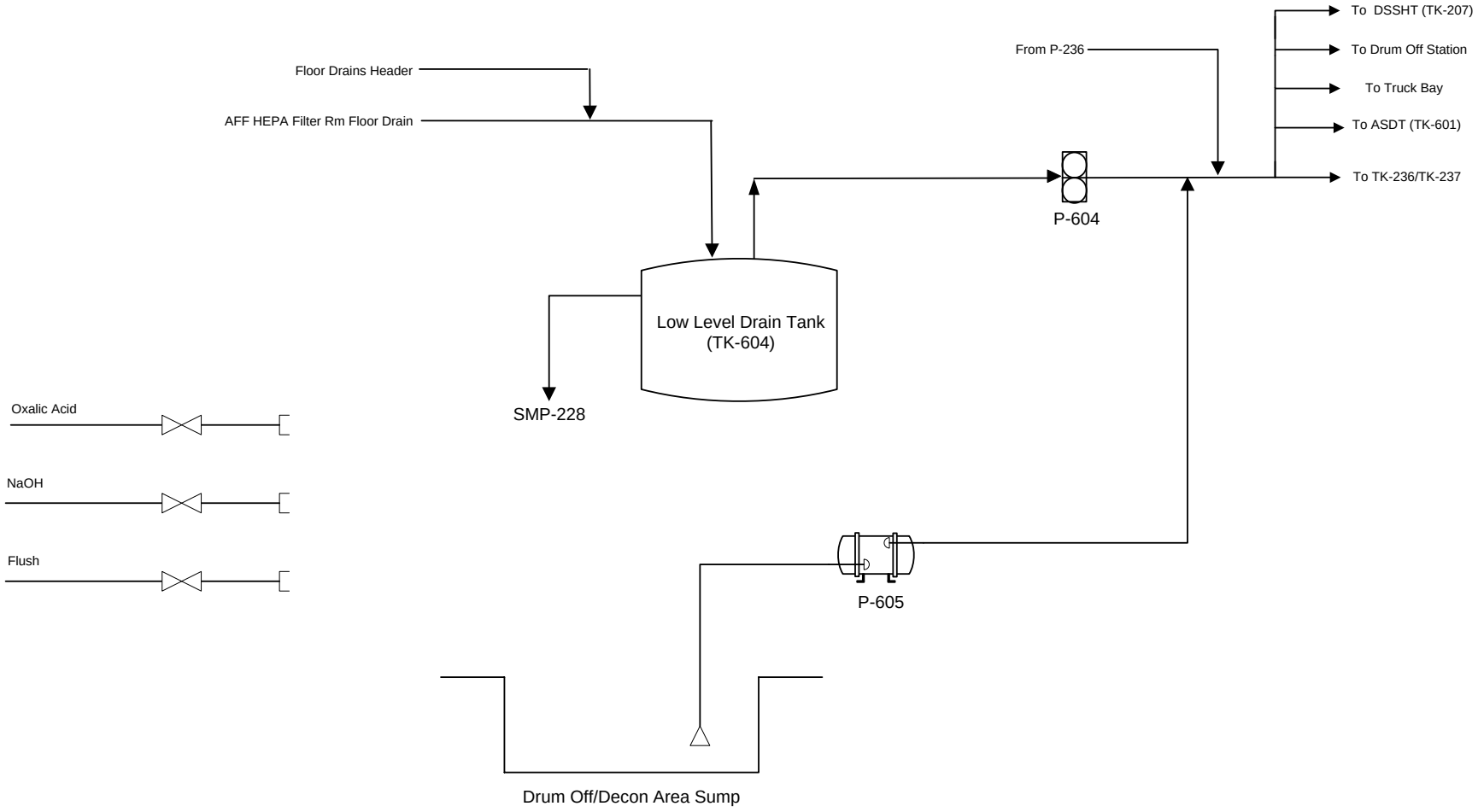

Notes:
1. All manual valves on branched lines not shown for clarity.
2. Sump can be sampled locally on recirculation loop through sump. Line not shown for clarity.

Figure 2-5. Caustic-side Solvent Extraction Process Drain Schematic

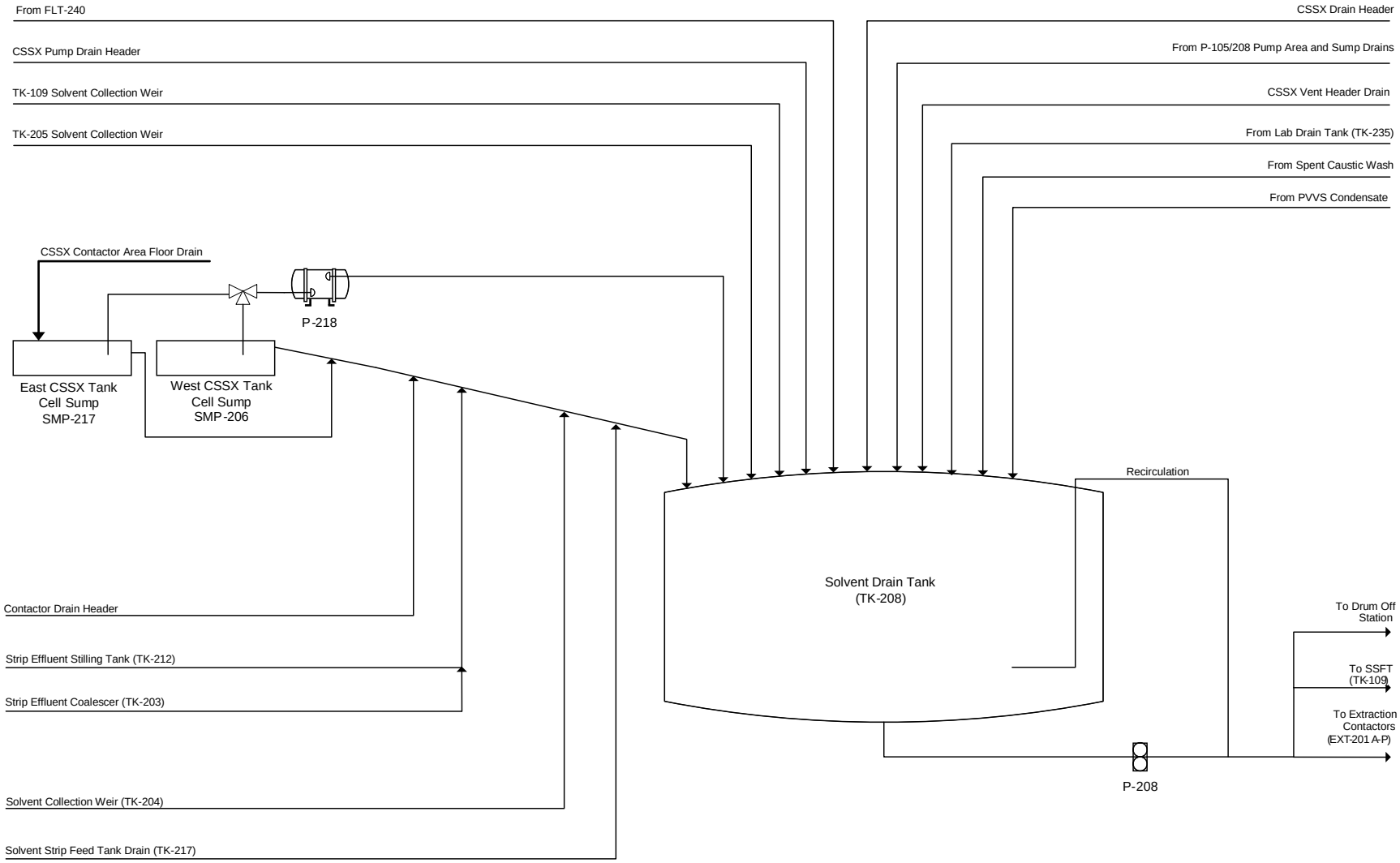

3.0 ASDT (TK-601)

3.1 System Functions

The ASDT System collects, stores, and transfers drainage and waste effluents generated by the ASP (see P-DB-J-00003, *SWPF Process Basis of Design*[14]). The main sources of drainage are:

- Draindown of the ASP CFF circuits,
- Spent caustic solution from Cleaning Solution Dump Tank-A (CSDT-A) (TK-103) or Cleaning Solution Dump Tank-B (CSDT-B) (TK-223),
- ASP Pump and Valve Gallery (P&VG) Labyrinth Sumps via the ASP P&VG Drain Header,
- CPA Cell Sump contents via the ASP Sump Transfer Pump (P-110),
- Waste Transfer Enclosure Cell Sump contents via the ASP Sump Transfer Pump (P-110),
- Low Level Drain Tank (TK-604) via the Low Level Drain Tank Transfer Pump (P-604),
- ASP Pump Drain Header,
- Sample Pump Drain Header, and
- Pulse Mixer Ventilation System condensate.

The drain lines from the ASP P&VGs will channel spills (waste and/or solvent) to the ASDT (TK-601). The drain lines mitigate exposure to facility workers by directing waste leakage to the ASDT (TK-601).

3.2 Operational Overview

ASDT (TK-601)

The ASDT (TK-601) receives drainage effluents from the ASP. The ASDT (TK-601) contents are adjusted to 1.66 Molar (M) hydroxide ion and transferred via the ASDT Transfer Pumps (P-601A/B) to the Alpha Sorption Tank-A (AST-A) (TK-101) for adjustment of the incoming Liquid Radioactive Waste.

ASP Tank Cell Sumps

The ASP Tank Cell Sumps provide collection points for effluents and vent seals. The ASP Tank Cell Sumps are pumped out via the ASP Sump Transfer Pump (P-110) to the Sludge Solids Receipt Tank (SSRT) (TK-104), ASDT (TK-601), or Drum Off Station.

The sump depths are standardized to 50 inches (see M-CLC-J-00083, *SWPF Process Cell Sump Sizing and Alpha Finishing Facility Sump Sizing*[15]).

The sump diameters are sized to accommodate the dip pipes routed to the sump. The sumps are 4 feet (ft) in diameter. The floors of each cell are sloped toward a sump to direct leakage to the sump.

ASP P&VG Sumps

The ASP P&VG Labyrinth Sumps receive drainage effluent from the following areas in the P&VG:

- Pump and Valve Area 110 (North ASP Labyrinth #1 / Room R131F),
- Pump and Valve Area 101 (North ASP Labyrinth #2 / Room R131E),
- Pump and Valve Area 102A (North ASP Labyrinth #3 / Room R131D),
- Pump and Valve Area 102B (North ASP Labyrinth #4 / Room R131C),
- Pump and Valve Area 102C (North ASP Labyrinth #5 / Room R131B),
- Pump and Valve Area 104 (North ASP Labyrinth #6 / Room R131A), and
- Pump and Valve Area 601 (South ASP Labyrinth #1 / Room R135C).

The floors of each pump and valve area are sloped toward a sump in that area to direct leakage to the sump. The sump drain lines are manifolded to a header routed to the ASDT (TK-601). The header contains a liquid-filled loop seal with level monitoring to prevent back-migration of contamination from ASDT (TK-601) and to provide a loop seal for the process vessel vent.

The sumps are normally dry. A level instrument is installed in each sump to monitor for leaks. A drip shield is provided to direct flow to the leak detection sump. Each sump is supplied with a process water supply for flushing and testing of the level instrument. An auto-siphon is installed for discharge of small leakage accumulation.

For high accumulation rates (e.g., labyrinth area washdowns), the sump overflows to the 6-inch drain line. Due to flow capacity limitations of the auto-siphon, the effluent accumulates in the leak detection sump. The level rises and overflows an internal weir into the drain line outlet sump. When the flow ceases, the overflow stops and the leak detection sump is emptied by the auto-siphon.

Figure 3-1 shows a schematic representation of the sump design.

Figure 3-1. ASP P&VG Labyrinth Sump Design

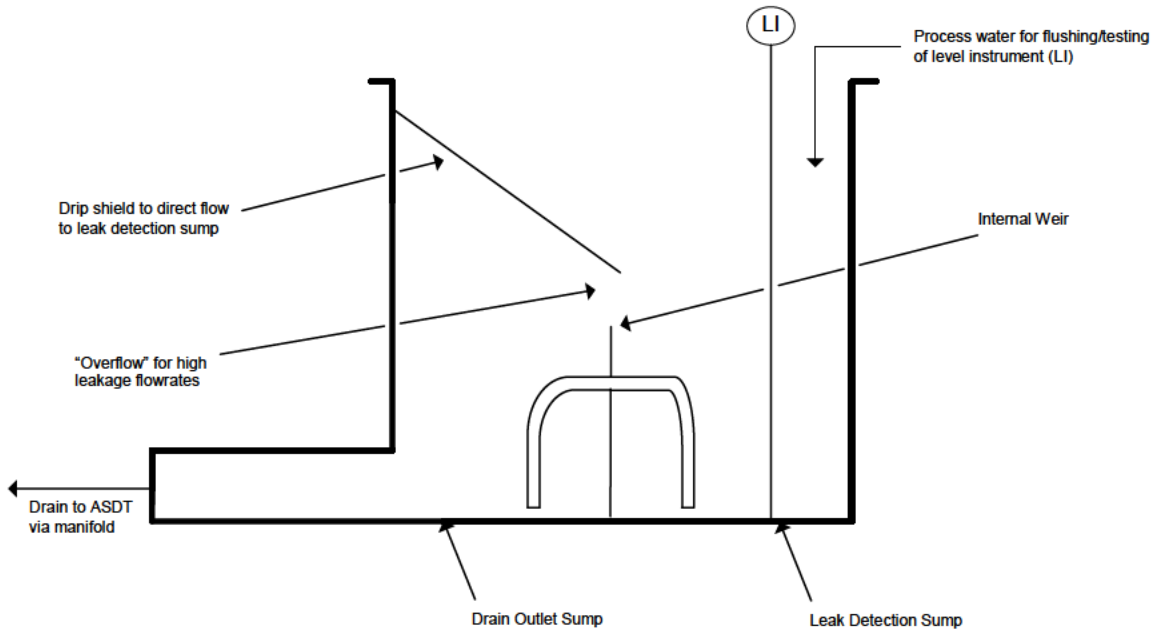

The sumps are sized to accommodate gravity-drain flows from the flush water spray nozzles or the fire system sprinklers (see M-CLC-J-00096, *SWPF Process Drain Lines Sizing Calculation*[16]). The higher flow requirement is based on a fire system deluge event (M-CLC-J-00096[16]).

3.3 Configuration Information

3.3.1 Description of System

Refer to Piping and Instrumentation Diagrams (P&IDs) and Process Flow Diagrams (PFDs) listed in Table 3-1.

Table 3-1. P&IDs and PFDs

Diagram Number	Diagram Title
M-M5-J-0018	*SWPF Lab Drain Tank, Alpha Sorption Drain Tank and Spent Acid Storage Tank PFD (U)*[17]
M-M6-J-0010	*SWPF Process Building Alpha Sorption Filter FLT-102A P&ID (U)*[18]
M-M6-J-0011	*SWPF Process Building Alpha Sorption Filter FLT-102B P&ID (U)*[19]
M-M6-J-0012	*SWPF Process Building Alpha Sorption Filter FLT-102C P&ID (U)*[20]
M-M6-J-0016	*SWPF Process Building Washing Filter FLT-104 P&ID (U)*[21]
M-M6-J-0020 SH1	*SWPF Process Building ASP Pump and Valve Gallery Labyrinth Sumps P&ID (U)*[22]
M-M6-J-0020 SH2	*SWPF Process Building ASP Pump and Valve Gallery Labyrinth Sumps P&ID (U)*[23]
M-M6-J-0020 SH3	*SWPF Process Building ASP Sump Transfer Pump P-110 P&ID (U)*[24]
M-M6-J-0051 SH4	*SWPF Alpha Finishing Facility Filter Feed/Solids Transfer Pump P-222-1C and Filter Recirculation Pump P-222-2C P&ID (U)*[25]
M-M6-J-0061	*SWPF Process Building Alpha Sorption Drain Tank TK-601 P&ID (U)*[26]
M-M6-J-0062 SH1	*SWPF Process Building Alpha Sorption Drain Tank Transfer Pumps P-601A/B P&ID (U)*[27]
M-M6-J-0062 SH2	*SWPF Process Building Alpha Sorption Drain Tank Transfer Pumps P-601A/B Piping P&ID (U)*[28]
M-M6-J-0115	*SWPF Process Building Spent Acid Storage Tank TK-127 P&ID (U)*[29]
M-M6-J-0132 SH1	*SWPF Process Building Process Cell Wet Sumps SMP-101, SMP-102, and SMP-601 P&ID (U)*[30]
M-M6-J-0132 SH2	*SWPF Process Building Process Cell Wet Sumps SMP-104, SMP-109, and SMP-205 P&ID (U)*[31]
M-M6-J-0147	*SWPF Alpha Finishing Facility Low Level Drain Tank TK-604 P&ID (U)*[32]
M-M6-J-0153	*SWPF Process Building Sample Pumps SP-104 and SP-105 P&ID (U)*[33]
M-M6-J-0166	*SWPF Process Building ASP Pump Drain Header P&ID (U)*[34]
M-M6-J-0187	*SWPF Process Building Pulse Mixer Vent System P&ID (U)*[35]

3.3.2 Major Components

See Table 3-2 for a list of major components.

Table 3-2. Major Components

Component	Description
ASDT (TK-601)	Capacity to Overflow: 4,300 gallons (M-CLC-J-00056, *SWPF Alpha Sorption Drain tank Sizing Calculation, TK-601*[36]) Dimensions: 6 ft diameter x 20 ft horizontal Tangent-Tangent (T/T) (M-CLC-J-00056[Error! Bookmark not defined.]) Design Features: • Stainless steel vessel; • Tank includes provisions for mixing; • Vented to the Process Vessel Vent Header to maintain vacuum, with respect to the ASDT Cell; • Tank is supplied with caustic feed line for hydrogen ion concentration (pH) adjustment of contents; • Tank has two redundant bubblers for level indication; and • Dipped overflow.
ASDT Transfer Pumps (P-601A/B)	To transfer ASDT (TK-601) contents to the required location of AST-A (TK-101), SSRT (TK-104), Wash Water Hold Tank (WWHT) (TK-105), or the Drum Off Station; to transfer the contents of SAST (TK-127) to the SSRT (TK-104) or the Drum Off Station, when required; and to transfer to the Analytical Laboratory Hot Cells for sampling. Capacity: 50 gallons per minute (gpm) Horsepower (hp): 10
AST-A Cell Sump (SMP-101)	To provide a collection point for effluents in the AST-A Cell and maintain a vent seal on the AST-A (TK-101) and AST-A breakpot. Dimensions: 4 ft diameter x 3 ft 6 in Top/Tangent Design Features: • Contains Process Water supply for maintaining sump level for vessel ventilation seals, • Sump sized to accommodate dip pipes routed to the sump, • Sump has one bubbler for level indication, and • Stainless steel-lined.
Filter Feed Tank-A (FFT-A) Cell Sump (SMP-102)	To provide a collection point for effluents in the FFT-A Cell and maintain a vent seal on the FFT-A (TK-102). Dimensions: 4 ft diameter x 3 ft 6 in Top/Tangent Design Features: • Contains Process Water supply for maintaining sump level for vessel ventilation seals, • Sump has one bubbler for level indication, and • Stainless steel-lined.

Table 3-2. Major Components (cont.)

Component	Description
SSRT/WWHT Cell Sump (SMP-104)	To provide a collection point for effluents in the SSRT/WWHT Cell and maintain a vent seal on SSRT (TK-104), WWHT (TK-105), CSDT-A (TK-103), and SSRT and CSDT-A breakpots. Dimensions: 4 ft diameter x 3 ft 6 in Top/Tangent Design Features: • Contains Process Water supply for maintaining sump level for vessel ventilation seals, • Sump has on bubbler for level indication, and • Stainless steel-lined.
ASDT Cell Sump (SMP-601)	To provide a collection point for effluents in the ASDT Cell and maintain a vent seal on ASDT (TK-601), SDT (TK-208), SAST (TK-127), Lab Drain Tank (TK-235), and ASDT breakpot. Dimensions: 4 ft diameter x 3 ft 6 in Top/Tangent Design Features: • Contains Process Water supply for maintaining sump level for vessel ventilation seals, • Sump has one bubbler for level indication, and • Stainless steel-lined.
Salt Solution Feed Tank (SSFT) Cell Sump (SMP-109)	To provide a collection point for effluents in the SSFT Cell and maintain a vent seal on SSFT (TK-109). Dimensions: 4 ft diameter x 3 ft 6 in Top/Tangent Design Features: • Contains Process Water supply for maintaining sump level for vessel ventilation seals, • Sump has one bubbler for level indication, and • Stainless steel-lined.
Strip Effluent Hold Tank (SEHT) Cell Sump (SMP-205)	To provide a collection point for effluents in the SEHT Cell and maintain a vent seal on SEHT (TK-205) and SEHT breakpot. Dimensions: 4 ft diameter x 3 ft 6 in Top/Tangent Design Features: • Contains Process Water supply for maintaining sump level for vessel ventilation seals, • Sump has one bubbler for level indication, and • Stainless steel-lined.
ASP Sump Transfer Pump (P-110)	To transfer ASP Cell Sump contents to the required location: ASDT (TK-601), SSRT (TK-104), or Drum Off Station. The pump can also transfer to Lab Hot Cell #2 for effluent sampling. Capacity: 25 gpm Drive: Pneumatic

3.3.3 Stream Data

See Table 3-3 for a listing of Streams.

Table 3-3. Streams

Stream	Description
Input Streams	
Refer to:	X-SD-J-00001[4] X-SD-J-00002[5] X-SD-J-00009[9]
Output Streams	
Waste Water	Drain effluents collected in the ASDT (TK-601) and adjusted to 1.66M sodium ion (Na^+) concentration for transfer to AST-A (TK-101) or to the Drum Off Station, as required (see P-DB-J-00003[14]).

3.3.4 Physical Location and Layout

ASDT (TK-601) and ASDT Cell

The ASDT (TK-601) is located in the ASDT Cell, which is at the lowest elevation of SWPF to maximize gravity-drain flow paths from the CPA to the respective drain tanks.

The ASDT Cell is suitably sized to house the ASDT (TK-601), SDT (TK-208), SAST (TK-127), and Lab Drain Tank (TK-235), as well as the ASP CFFs that are suspended from the Operating Deck. The ASDT cell is located at the 88'-6" elevation and is designed to receive waste from the process and sized to contain design basis spill events.

The ASDT Cell contains a sump (SMP-601) into which the ASDT (TK-601), SDT (TK-208), SAST (TK-127), and Lab Drain Tank (TK-235) overflows are dipped in order to maintain seals for ventilation purposes. In addition, the ASDT, SDT, and SAST breakpot overflows are dipped in SMP-601 in order to maintain seals for ventilation purposes.

ASDT Transfer Pumps (P-601A/B)

The ASDT Transfer Pumps (P-601A/B) are located in the South ASP P&VG.

ASP Tank Cell Sumps

Sumps are located as follows:

- AST-A Cell Sump (SMP-101),
- FFT-A Cell Sump (SMP-102),
- SSRT/WWHT Cell Sump (SMP-104),

- SSFT Cell Sump (SMP-109), and
- SEHT Cell Sump (SMP-205).

ASP P&VG Labyrinth Sumps

Sumps are located in the following labyrinth areas:

- SI-222 in the Pump and Valve Area 110 (North ASP Labyrinth #1 / Room R131F),
- SI-221 in the Pump and Valve Area 101 (North ASP Labyrinth #2 / Room R131E),
- SI-220 in the Pump and Valve Area 102A (North ASP Labyrinth #3 / Room R131D),
- SI-219 in the Pump and Valve Area 102B (North ASP Labyrinth #4 / Room R131C),
- SI-224 in the Pump and Valve Area 102C (North ASP Labyrinth #5 / Room R131B),
- SI-223 in the Pump and Valve Area 104 (North ASP Labyrinth #6 / Room R131A), and
- SI-225 in the Pump and Valve Area 601 (South ASP Labyrinth #1 / Room R135C).

ASP Sump Transfer Pump (P-110)

The ASP Transfer Pump (P-110) is located in the Pump and Valve Area 110 (North ASP Labyrinth #1 / Room R131F).

3.3.5 System Control Features and Interlocks

3.3.5.1 System Monitoring

The ASDT System has instrumentation to monitor the status of the system and initiate corrective actions, if necessary. Remote indications are provided to the Distributed Control System (DCS).

See Table 3-4 for a listing of System Monitoring Instrumentation. Many of these components are also associated with the SAST (TK-127).

Table 3-4. ASDT System Monitoring Instrumentation

Equipment/ Instrument Number	P&ID	Scale Sheet	Monitored Variable	Indications
LIT-1105	M-M6-J-0132 SH1[30]	J-JZ-J-00079, *SWPF LI-1105 AST-A Sump Level*[37]	SMP-101 Liquid Level	Inches
LIT-1107	M-M6-J-0132 SH1[30]	J-JZ-J-00080, *SWPF LI-1107 FFT-A Sump Level*[38]	SMP-102 Liquid Level	Inches
LIT-1109	M-M6-J-0132 SH1[30]	J-JZ-J-00083, *SWPF LI-1109 ASDT Sump Level*[39]	SMP-601 Liquid Level	Inches
HV-1152	M-M6-J-0062 SH2[28]	Not Applicable (N/A)	Valve Position	Open/Closed
LIT-1180	M-M6-J-0020 SH1[22]	J-JZ-J-00186, *SWPF LI-1180 North ASP Labyrinth #3 Sump Level*[40]	Pump and Valve Area 102A Sump Liquid Level	Inches
LIT-1181	M-M6-J-0020 SH1[22]	J-JZ-J-00187, *SWPF LI-1181 north ASP Labyrinth #4 Sump Level*[41]	Pump and Valve Area 102B Sump Liquid Level	Inches
LIT-1182	M-M6-J-0020 SH2[23]	J-JZ-J-00190, *SWPF LI-1182 North ASP Labyrinth #5 Sump Level*[42]	Pump and Valve Area 102C Sump Liquid Level	Inches
HV-1205	M-M6-J-0010[18]	N/A	Valve Position	C-A/C-B/Closed
HV-1215	M-M6-J-0011[19]	N/A	Valve Position	C-A/C-B/Closed
HV-1225	M-M6-J-0012[20]	N/A	Valve Position	C-A/C-B/Closed
LIT-1299	M-M6-J-0020 SH2[23]	J-JZ-J-00191, *SWPF LI-1299 North ASP Labyrinth #6 Sump Level*[43]	Pump and Valve Area 104 Sump Liquid Level	Inches
HV-1305	M-M6-J-0016[21]	N/A	Valve Position	C-A/C-B/Closed
LIT-1315	M-M6-J-0132 SH2[31]	J-JZ-J-00081, *SWPF LI-1315 SSRT/WWHT Sump Level*[44]	SMP-104 Liquid Level	Inches
LIT-1391	M-M6-J-0132 SH2[31]	J-JZ-J-00082, *SWPF LI-1391 SSFT Sump Level*[45]	SMP-109 Liquid Level	Inches
LIT-1499	M-M6-J-0132 SH2[31]	J-JZ-J-01080, *SWPF LI-1499 SEHT Sump Level*[46]	SMP-205 Liquid Level	Inches
LIT-1729	M-M6-J-0020 SH1[22]	J-JZ-J-00188, *SWPF LI-1729 North ASP Labyrinth #2 Sump Level*[47]	Pump and Valve Area 101 Sump Liquid Level	Inches
LIT-1730	M-M6-J-0020 SH1[22]	J-JZ-J-00189, *SWPF LI-1730 North ASP Labyrinth #1 Sump Level*[48]	Pump and Valve Area 110 Sump Liquid Level	Inches

Table 3-4. ASDT System Monitoring Instrumentation (cont.)

Equipment/ Instrument Number	P&ID	Scale Sheet	Monitored Variable	Indications
LIT-1740	M-M6-J-0020 SH2[23]	J-JZ-J-00193, *SWPF LI-1740 South ASP Labyrinth #1 Sump Loop Seal to ASDT*[49]	Drain Manifold Loop Seal Liquid Level	Inches
LIT-1741	M-M6-J-0020 SH2[23]	J-JZ-J-00194, *SWPF LI-1741 North ASP Labyrinth #5 Sump Loop Seal to ASDT*[50]	Drain Manifold Loop Seal Liquid Level	Inches
HV-1743	M-M6-J-0020 SH3[24]	N/A	Valve Position	Open/Closed
HV-1744	M-M6-J-0020 SH3[24]	N/A	Valve Position	Open/Closed
HV-1745	M-M6-J-0020 SH3[24]	N/A	Valve Position	Open/Closed
HV-1746	M-M6-J-0020 SH3[24]	N/A	Valve Position	Open/Closed
HV-1747	M-M6-J-0020 SH3[24]	N/A	Valve Position	Open/Closed
HV-1748	M-M6-J-0020 SH3[24]	N/A	Valve Position	Open/Closed
HV-1749	M-M6-J-0020 SH3[24]	N/A	Valve Position	Open/Closed
HV-1750	M-M6-J-0020 SH3[24]	N/A	Valve Position	Open/Closed
HV-1751	M-M6-J-0020 SH3[24]	N/A	Valve Position	Open/Closed
HV-1752	M-M6-J-0020 SH3[24]	N/A	Valve Position	Open/Closed
HV-1753	M-M6-J-0020 SH3[24]	N/A	Valve Position	Open/Closed
HV-1754	M-M6-J-0020 SH3[24]	N/A	Valve Position	Open/Closed
HV-1755	M-M6-J-0020 SH3[24]	N/A	Valve Position	Open/Closed
HV-1756	M-M6-J-0020 SH3[24]	N/A	Valve Position	Open/Closed
PIT-7201	M-M6-J-0062 SH1[27]	J-JZ-J-01200, *SWPF PI-7201 ASDT Xfer Pump A Disch Pressure*[51]	P-601A Discharge Pressure	psig
PIT-7203	M-M6-J-0062 SH1[27]	J-JZ-J-01201, *SWPF PI-7203 ASDT Xfer Pump B Disch Pressure*[52]	P-601B Discharge Pressure	psig
LIT-7223	M-M6-J-0020 SH2[23]	J-JZ-J-00192, *SWPF LI-7223 South ASP Labyrinth #1 Sump Level*[53]	Pump and Valve Area 601 Sump Liquid Level	Inches
FE-7224	M-M6-J-0062 SH1[27]	J-JZ-J-00536, *SWPF FI-7224 ASDT Xfer Pump A Flow*[54]	P-601A Flow Rate	gpm
SC-7227	M-M6-J-0062 SH1[27]	J-JZ-J-01223, *SWPF SIC-7227 ASDT Xfer Pump A Speed*[55]	P-601A Pump Speed	0-100 percent (%)
P-601A	M-M6-J-0062 SH1[27]	N/A	Pump Status	Run/Off
SC-7228	M-M6-J-0062 SH1[27]	J-JZ-J-01224, *SWPF SIC-7228 ASDT Xfer Pump B Speed*[56]	P-601B Pump Speed	0-100%

Table 3-4. ASDT System Monitoring Instrumentation (cont.)

Equipment/ Instrument Number	P&ID	Scale Sheet	Monitored Variable	Indications
HV-1759	M-M6-J-0020 SH3[24]	N/A	Valve Position	Open/Closed
P-601B	M-M6-J-0062 SH1[27]	N/A	Pump Status	Run/Off
DIT-7235	M-M6-J-0061[26]	J-JZ-J-00532, *SWPF DI-7235 ASDT Density*[57]	ASDT (TK-601) Liquid Density	Specific Gravity (s.g.)
LIT-7235	M-M6-J-0061[26]	J-JZ-J-0039, *SWPF LI-7235 ASDT Level*[58]	ASDT (TK-601) Liquid Level	Gallons
TE-7236	M-M6-J-0061[26]	J-JZ-J-00535, *SWPF TI-7236 ASDT Temp*[59]	ASDT (TK-601) Liquid Temperature	Degrees Fahrenheit (°F)
PDIT-7237	M-M6-J-0061[26]	J-JZ-J-00534, *SWPF PDI-7237 ASDT Vacuum*[60]	ASDT (TK-601) Vapor Space Differential Pressure	Inches of Water Vacuum
DIT-7238	M-M6-J-0061[26]	J-JZ-J-00533, *SWPF DI-7238 ASDT Density*[61]	ASDT (TK-601) Liquid Density	s.g.
LIT-7238	M-M6-J-0061[26]	J-JZ-J-0040, *SWPF LI-7238 ASDT Level*[62]	ASDT (TK-601) Liquid Level	Gallons
PDIT-7260	M-M6-J-0115[29]	J-JZ-J-00597, *SWPF PDI-7260 SAST Vacuum*[63]	SAST (TK-127) Vapor Space Differential Pressure	Inches Water Vacuum
LIT-7261	M-M6-J-0115[29]	J-JZ-J-0020, *SWPF LI-7261 SAST Level*[64]	SAST (TK-127) Tank Liquid Level	Gallons
DIT-7261	M-M6-J-0115[29]	J-JZ-J-00595, *SWPF DI-7261 SAST Density*[65]	SAST (TK-127) Tank Liquid Density	s.g.
TE-7263	M-M6-J-0115[29]	J-JZ-J-00598, *SWPF TI-7263 SAST Temp*[66]	SAST (TK-127) Tank Liquid Temperature	°F
LIT-7265	M-M6-J-0115[29]	J-JZ-J-0021, *SWPF LI-7265 SAST Level*[67]	SAST (TK-127) Tank Liquid Level	Gallons
DIT-7265	M-M6-J-0115[29]	J-JZ-J-00596, *SWPF DI-7265 SAST Density*[68]	SAST (TK-127) Tank Liquid Density	s.g.
HV-7271	M-M6-J-0062 SH1[27]	N/A	Valve Position	C-A/C-B/B-A
HV-7272	M-M6-J-0062 SH1[27]	N/A	Valve Position	C-B/C-A/A-B
HV-7273	M-M6-J-0062 SH1[27]	N/A	Valve Position	Open/Closed
HV-7274	M-M6-J-0062 SH1[27]	N/A	Valve Position	Open/Closed
HV-7275	M-M6-J-0062 SH1[27]	N/A	Valve Position	Open/Closed

Table 3-4. ASDT System Monitoring Instrumentation (cont.)

Equipment/ Instrument Number	P&ID	Scale Sheet	Monitored Variable	Indications
HV-7276	M-M6-J-0062 SH1[27]	N/A	Valve Position	Open/Closed
FE-7277	M-M6-J-0062 SH1[27]	J-JZ-J-00537, *SWPF FI-7277 ASDT Xfer Pump B Flow*[69]	P-601B Flow Rate	gpm
HV-7278	M-M6-J-0062 SH2[28]	N/A	Valve Position	B-C/A-C/A-B
HV-7279	M-M6-J-0062 SH2[28]	N/A	Valve Position	A-C/B-C/B-A
HV-7280	M-M6-J-0062 SH2[28]	N/A	Valve Position	Open/Closed
HV-7281	M-M6-J-0062 SH2[28]	N/A	Valve Position	Open/Closed
HV-7282	M-M6-J-0062 SH2[28]	N/A	Valve Position	Open/Closed
FE-7283	M-M6-J-0062 SH2[28]	J-JZ-J-00538, *SWPF FIC-7283 ASDT Sample Flow*[70]	P-601A/B Flow Rate	gpm
FV-7283	M-M6-J-0062 SH2[28]	N/A	Valve Position	Open/Closed
HV-7284	M-M6-J-0062 SH2[28]	N/A	Valve Position	Open/Closed
FE-7285	M-M6-J-0062 SH2[28]	J-JZ-J-00539, *SWPF FIC-7285 SAST Sample Flow*[71]	P-601A/B Flow Rate	gpm
FV-7285	M-M6-J-0062 SH2[28]	N/A	Valve Position	0-100%
HV-7286	M-M6-J-0062 SH1[27]	N/A	Valve Position	Open/Closed
HV-7287	M-M6-J-0062 SH2[28]	N/A	Valve Position	Open/Closed
HV-7288	M-M6-J-0062 SH1[27]	N/A	Valve Position	Open/Closed
HV-7289	M-M6-J-0062 SH2[28]	N/A	Valve Position	Open/Closed
FV-7290	M-M6-J-0062 SH2[28]	N/A	Valve Position	0-100%
FV-7291	M-M6-J-0062 SH2[28]	N/A	Valve Position	0-100%
VE-9271B/C/D	M-M6-J-0062 SH1[27]	N/A	P-601B Vibration	Cycles/second Inches/second
VE-9272B/C/D	M-M6-J-0062 SH1[27]	N/A	P-601A Vibration	Cycles/second Inches/second
HV-1768	M-M6-J-0020 SH3[24]	N/A	Valve Position	Open/Closed
HV-1769	M-M6-J-0020 SH3[24]	N/A	Valve Position	Open/Closed
HV-1772	M-M6-J-0020 SH3[24]	N/A	Valve Position	Open/Closed
HV-1774	M-M6-J-0020 SH3[24]	N/A	Valve Position	Open/Closed
LA-1770	M-M6-J-0020 SH3[24]	J-JZ-J-01388	SI-821 Liquid Level	No Level/Level

3.3.5.2 Control Functions

Table 3-5 is a list of control loops for the ASDT System. These control loops are also associated with the SAST (TK-127).

Table 3-5. Control Loops

Loop Number	P&ID	Scale Sheet	Controlled Variable	Set Point
FIC-7283	M-M6-J-0062 SH2[28]	J-JZ-J-00538[70]	P-601A/B Flow to Analytical Laboratory	Operator-entered
FIC-7285	M-M6-J-0062 SH2[28]	J-JZ-J-00539[71]	P-601A/B Flow to Analytical Laboratory	Operator-entered

Operations will maintain the ASP Tank Cell sump levels. If required, ASP Tank Cell washdowns and cell sump pump-out are manually initiated by the Operator.

Operations initiated by the Operator via the DCS include ASP filter shell and back pulse tank draindown, AFP filter shell and back pulse tank draindown, and ASDT pump transfer.

Interlocks are manually reset by the Operator.

3.4 Operations

3.4.1 Initial Configuration

The ASDT (TK-601) primarily provides a means for draindown of process equipment and tanks in ASP for maintenance purposes. ASDT (TK-601) is empty for SWPF plant startup operations.

Sumps (SMP-101, -102, -104, -109, -205, and -601) require addition of process water to provide vent seals on the tank overflows.

The ASP P&VG Labyrinth Sumps are empty for SWPF plant startup operations.

The South ASP P&VG Labyrinth sump (SI-225) drains to the ASDT (TK-601). This drain line includes a loop seal with level indication.

The North ASP P&VG Labyrinth sumps (SI-219 through SI-224) drain to the ASDT (TK-601) via a common drain line. This common drain line includes a loop seal with level indication.

3.4.2 System Startup

Equipment is started by the Operator via the DCS. Transfer Pumps P-601A/B can pump from either ASDT (TK-601) or SAST (TK-127) via a pump suction cross-over line. However, in normal operation, P-601A pumps from ASDT (TK-601) and P-601B transfers from SAST (TK-127).

Pump P-601A operation can be initiated when a minimum ASDT (TK-601) level has been exceeded.

3.4.3 Normal Operations

ASP P&VG Labyrinth Sumps

Process Water is supplied to the sump by opening a manual isolation valve from the ASP Pump Flush Header.

Operations will regularly check that the drain manifold loop seals are above a minimum level and, if necessary, add Process Water via one of the sumps.

Following a leak or spray of radioactive material in a labyrinth, and if more standard decontamination methods are judged to be inadequate, it may be desirable to decontaminate the general area using the flush rings located in the ASP P&VG. Process Water that has provisions for chemical addition is supplied by opening a manual isolation valve from the ASP Flush Header. The Operator must ensure that the ASDT (TK-601) has sufficient capacity to receive a flush ring discharge of approximately 165 gpm prior to commencing a washdown.

ASP Tank Cell Sumps

Operations will check the cell sump levels on a regular basis and, if necessary, add Process Water in order to maintain the dipped pipe seals.

Process Water is supplied by opening a manual isolation valve in the Process Water distribution header. Operations can add microbial control chemicals to the sumps, in order to prevent microbial growth, if required.

If the need arises to pump out an ASP Tank Cell Sump, the relevant sump is routed to ASP Sump Transfer Pump (P-110) by the Operator opening an automated isolation valve. The pump discharge is routed to one of the following locations after sampling by opening an automated isolation valve:

- ASDT (TK-601): This is the normal discharge route;
- SSRT (TK-104): This route provides a discharge route from SWPF. A transfer through this route requires special permission by the Operations shift supervisor; or
- Drum Off Station: This route provides a path out of SWPF if the effluent composition does not meet SWPF processing requirements.

Once the discharge route is selected, P-110 is operated by supplying Plant Air, via an automated supply valve, to the drive. The valve is closed to stop the pump operation.

The pump and pipework can be flushed by opening isolation valves from the ASP Pump Flush Header. Process Water with provisions for chemical addition can be used for flushing the system.

ASP Filter Circuit Draindown

An ASP filter circuit draindown is initiated by the Operator via the DCS.

The filter shell and back pulse tank are drained via three-way, two-position automated isolation valves. If the circuit is to be drained of process filtrate, the valves are positioned to ASDT (TK-601), which provides a recycle loop back to AST-A (TK-101).

If the circuit is to be drained of chemical cleaning solution (either 1.0M sodium hydroxide [NaOH] or 20 weight percent [wt%] Nitric Acid [HNO_3]), the valves are routed to CSDT-A (TK-103). The cleaning solution is then transferred to the required tank in the ASDT Cell:

- 1.0M NaOH is transferred to either the ASDT (TK-601) or the SAST (TK-127), and
- 20 wt% HNO_3 is transferred to SAST (TK-127).

ASDT (TK-601)

Transfer Pump P-601A typically supports operations in the ASDT (TK-601) and Transfer Pump P-601B typically supports operations in the SAST (TK-127), however either pump can be used with either tank. For certain operations (e.g., turbo-mixing) both pumps simultaneously support a single tank. Turbo mixing refers to using both pumps to supply both eductors (EDT-601-1 and EDT-601-2) in the ASDT (TK-601).

Transfer Pump P-601A operation is initiated by the Operator via the DCS. P-601A operates in recirculation mode when the tank is above a minimum level to provide mixing of the ASDT (TK-601) contents.

Prior to transferring out of the ASDT (TK-601), a sample is taken for analysis. The sample is taken by routing a proportion of the pump recirculation flow to Lab Hot Cell #1. The sample flow is controlled with a control valve and flow instrument. The sample analysis determines the discharge route to be used by Transfer Pump P-601A. The available routes are:

- AST-A (TK-101): This is the normal discharge route of Transfer Pump P-601A. From the sample result, the Operator determines the amount of 25 wt% NaOH to be added from the Neutralization Tank (TK-317) or the amount of water for dilution to achieve 1.66M Na^+ concentration. After the ASDT (TK-601) is adjusted as required, P-601A can discharge to AST-A (TK-101).
- To SSRT (TK-104): This route provides a discharge route from SWPF and will only be used if the ASDT (TK-601) contents are not suitable for re-processing through the ASP. If the Defense Waste Processing Facility Waste Acceptance Criteria cannot be met, the need for Safety Basis changes in the affected liquid waste facilities should be evaluated.
- To WWHT (TK-105): If the ASDT (TK-601) contents are suitable for recycling to AST-A (TK-101), but AST-A (TK-101) is unavailable, transfer to the WWHT (TK-105) provides a means of interim storage for the effluent, in order to make the ASDT (TK-601) available.

- To Drum Off Station: This route provides a disposal route for effluent unsuitable for recycling to ASP.

The required discharge route is selected by the Operator via the DCS, which opens the appropriate automated discharge valve.

The process sequences for the ASDT system are included in Section 6.0 of X-PCD-J-00005, *SWPF Automation Functional Control Sequence for: Drains*[72].

3.4.4 Off-Normal and Recovery Operation

Table 3-6 lists conditions (failures/malfunctions/interlocks) of system components and recommended actions.

Table 3-6. Failures/Malfunctions

Condition	Detection	Immediate Action	Recovery
ASDT (TK-601) High Level	Level Indicators (LI-7235 and LI-7238)	Stop all inputs into ASDT (TK-601).	Use P-601A/B to reduce level.
ASDT Transfer Pump (P-601A/B) Failure	Low Flow Alarms (FI-7224 and FI-7277)	Switch to the alternate duty pump.	The alternate duty pump can be used until repairs are completed. The failed pump and associated piping will be flushed and drained prior to P&VG entry.
Equipment or Valve Failure	Failure Alarm in DCS	Perform Aborting/Stopping Logic for Running Sequence	The alternate duty pump can be used until maintenance can be performed. For maintenance, flush out piping and pumps to allow access to investigate.
Low Plant Air Header Pressure	Pressure Indicator (PI-4435)	Perform Aborting/Stopping Logic for Running Sequence.	Operator to investigate cause of problem.
Low Process Building Exhaust Fan differential pressure (dP)	Differential Pressure Indicator (PDI-4077)	Perform Aborting/Stopping Logic for Running Sequence.	Operator to investigate cause of problem.

3.4.5 System Shutdown

All routes into the ASDT (TK-601) are isolated and P-601A/B is stopped during normal shutdown.

Several factors can lead to off-normal shutdown of the system. Misaligned valves, valve failures, and equipment failures would all lead to the system shutting down. In shutdown mode, the valves close and the pumps are shut down.

4.0 CAUSTIC-SIDE SOLVENT EXTRACTION SUMPS

4.1 System Functions

The CSSX Sump System collects, stores, and transfers drainage and waste effluents generated by the CSSX process (see P-DB-J-00003[14]). The main sources of drainage are:

- CSSX Tank Cell Sumps,
- CSSX Labyrinth Area Sumps via the CSSX Drain Header, and
- South ASP Area 105 and 208 Sumps, WWHT Transfer Pumps (P-105A/B), and Solvent Drain Tank Pumps (P-208A/B) casing drains.

The drain lines from the CSSX P&VGs, CSSX Tank cell areas and contactor area floor drain will channel spills (waste and/or solvent) to the SDT (TK-208). The drain lines mitigate exposure to facility workers and reduces the probability of large solvent fires by directing waste and solvent leakage to the SDT (TK-208).

4.2 Operational Overview

CSSX Tank Cell Sumps

The West CSSX Tank Cell Sump (SMP-206) receives overflows from:

- Solvent Hold Tank (SHT) (TK-202),
- Caustic Wash Tank (TK-204),
- Barium-137 Decay Tank (BDT) (TK-206),
- Caustic Wash Tank Siphon Break (SB-204), and
- SHT Siphon Break (SB-202).

The East CSSX Tank Cell Sump (SMP-217) receives overflows from:

- Strip Effluent Pump Tank (TK-215), and
- Solvent Strip Feed Tank (TK-217).

The sumps are pumped to the SDT (TK-208) via the CSSX Tank Cell Sump Transfer Pump (P-218).

Each overflow line is dipped into the sump to maintain a seal for ventilation purposes.

Both sumps include a 6-inch gravity overflow line to manage large spillages. Overflows are routed to the SDT (TK-208).

The sump depths are standardized to 36 inches (see M-CLC-J-00083[15]). The sump diameters are sized to accommodate the dip pipes routed to the sump. The sumps are 4 ft in diameter. The floors of each cell are sloped toward a sump to direct any leakage into the sump.

CSSX Labyrinth Area Sumps

The CSSX Labyrinth Area Sumps receive drainage effluent from the following areas in the P&VG:

- CSSX Pump and Valve Area 109A/B (CSSX Labyrinth #1 / Room R136C),
- CSSX Pump Area 205A/B (CSSX Labyrinth #2 / Room R136B),
- CSSX Pump Area 202/204/206A (CSSX Labyrinth #3 / Room R136G),
- CSSX Pump Area 202/204/206B (CSSX Labyrinth #4 / Room R136F),
- CSSX Pump Area 215/217A (CSSX Labyrinth #5 / Room R136E),
- CSSX Pump Area 215/217B (CSSX Labyrinth #6 / Room R136D), and
- Sample Pump and Valve Labyrinth (Room R136A).

The Sample Pump and Valve Labyrinth sump also receives drainage from the Contactor Support Floor Chase via a floor drain at elevation 116'. This drain path will only see flow in the event that there is a leak from the welded pipes contained in the chase. A loop seal in the drain pipe maintains separation between the atmosphere in the chase and that in the labyrinth.

The floors of each pump area are sloped toward a sump in that area to direct any leakage into the sump. The sump drain lines are manifolded to a header routed to the SDT (TK-208). The header contains a loop seal with level monitoring to prevent the Process Vessel Ventilation System (PVVS) from pulling air from the header.

The sumps are normally dry. A level instrument is installed in each sump to monitor for leaks. A drip shield is provided to direct flow to the leak detection sump. Each sump is supplied with a Process Water supply for flushing and testing of the level instrument. An auto-siphon is installed for discharge of small leakage accumulation.

For high accumulation rates (e.g., labyrinth area washdowns), the sump overflows to the 6-inch drain line. Due to flow capacity limitations of the auto-siphon, the effluent accumulates in the leak detection sump. The level rises and overflows an internal weir into the drain line outlet sump. When the flow ceases, the overflow stops and the leak detection sump is emptied by the auto-siphon.

Figure 4-1 shows a schematic representation of the sump design.

Figure 4-1. CSSX Labyrinth Area Sump Design

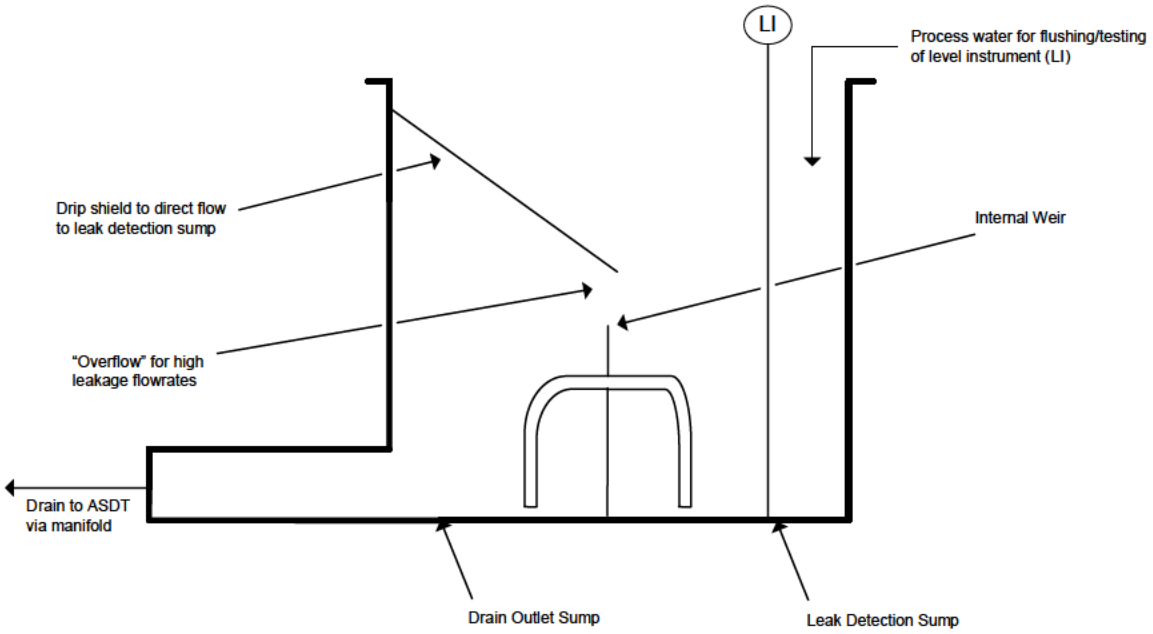

The sumps are sized to accommodate gravity-drain flows from the flush water spray nozzles or the fire system sprinklers (see M-CLC-J-00096[16]). The higher flow requirement is based on a fire system deluge event (M-CLC-J-00096[16]).

South ASP Area 105/208 Sumps

The South ASP Area 105/208 sumps receive drainage effluent from the following areas in the P&VG:

- Pump and Valve Area 105/208B (South ASP Labyrinth #2 / Room R135B), and
- Pump and Valve Area 105/208A (South ASP Labyrinth #3 / Room R135A).

The sumps have the same design as shown in Figure 4-1. The sump drain lines are manifolded to a header routed to the SDT (TK-208). The header contains a loop seal with level monitoring to prevent back-migration of contamination from the SDT (TK-208). The floors of the South ASP P&VG Area are sloped toward the sumps in that area to direct any leakage into a sump.

4.3 Configuration Information

4.3.1 Description of System

Refer to P&IDs and PFDs listed in Table 4-1.

Table 4-1. P&IDs and PFDs

Diagram Number	Diagram Title
M-M5-J-0001	*SWPF Simplified Process Flow Schematic (U)*[73]
M-M6-J-0030	*SWPF Process Building Salt Solution Feed Tank TK-109 P&ID (U)*[74]
M-M6-J-0032	*SWPF Process Building Strip Effluent Hold Tank TK-205 P&ID (U)*[75]
M-M6-J-0043 SH2	*SWPF Process Building Caustic Wash Tank TK-204 P&ID (U)*[76]
M-M6-J-0047 SH2	*SWPF Process Building Ba-137 Decay Tank TK-206 P&ID (U)*[77]
M-M6-J-0060 SH1	*SWPF Process Building Solvent Strip Feed Tank TK-217 P&ID (U)*[78]
M-M6-J-0064 SH1	*SWPF Process Building CSSX Labyrinth Area Sumps P&ID (U)*[79]
M-M6-J-0064 SH2	*SWPF Process Building CSSX Pump Drain Header P&ID (U)*[80]
M-M6-J-0122 SH2	*SWPF Process Building Strip Effluent Pump Tank TK-215 P&ID (U)*[81]
M-M6-J-0126	*SWPF Process Building West CSSX Tank Cell Sump P&ID (U)*[82]
M-M6-J-0138	*SWPF Process Building South ASP Area 105 and 208 Sumps P&ID (U)*[83]
M-M6-J-0150	*SWPF Process Building East CSSX Tank Cell Sump P&ID (U)*[84]

4.3.2 Major Components

See Table 4-2 for a list of major components.

Table 4-2. Major Components

Component	Description
CSSX West Tank Cell Sump (SMP-206)	To provide a collection point for effluents in the CSSX West Tank Cell and maintain a vent seal on the SHT (TK-202) and breakpot, Caustic Wash Tank (TK-204) and breakpot, and BDT (TK-206) overflow dip pipes routed to the sump. Dimensions: 4 ft diameter x 3 ft 6 in Top/Tangent (M-M6-J-0126[82]) Design Features: • Sump has one bubbler for level indication, and • Stainless steel-lined.
CSSX East Tank Cell Sump (SMP-217)	To provide a collection point for effluents in the CSSX East Tank Cell and maintain a vent seal on the Strip Effluent Pump Tank (TK-215) and Solvent Strip Feed Tank (TK-217) overflow dip pipes routed to the sump. Dimensions: 4 ft diameter x 3 ft 6 in Top/Tangent (M-M6-J-0150[84]) Design Features: • Sump has one bubbler for level indication, and • Stainless steel-lined.

Table 4-2. Major Components (cont.)

Component	Description
CSSX Tank Cell Sump Transfer Pump (P-218)	To transfer SMP-206 and SMP-217 contents to SDT (TK-208) or Lab Hot Cell #2 for sampling. Capacity: 15 gpm • Drive: Pneumatic

4.3.3 Stream Data

Refer to X-SD-J-00002[5] and X-SD-J-00009[9] for information on the relevant streams.

4.3.4 Physical Location and Layout

CSSX Tank Cell Sumps

Sumps are located as follows:

- SMP-206 is located in the West CSSX Tank Cell, and
- SMP-217 is located in the East CSSX Tank Cell.

CSSX Labyrinth Area Sumps

Sumps are located in the following labyrinth areas:

- SI-228 in the CSSX Pump and Valve Area 109A/B (CSSX Labyrinth #1 / Room R136C),
- SI-227 in the CSSX Pump Area 205A/B (CSSX Labyrinth #2 / Room R136B),
- SI-232 in the CSSX Pump Area 202/204/206A (CSSX Labyrinth #3 / Room R136G),
- SI-231 in the CSSX Pump Area 202/204/206B (CSSX Labyrinth #4 / Room R136F),
- SI-230 in the CSSX Pump Area 215/217A (CSSX Labyrinth #5 / Room R136E),
- SI-229 in the CSSX Pump Area 215/217B (CSSX Labyrinth #6 / Room R136D), and
- SI-226 in the Sample Pump and Valve Labyrinth (Room R136A).

South ASP Area 105/208 Sumps

The WWHT Transfer Pumps (P-105A/B) and Solvent Drain Tank Pumps (P-208A/B) are located in labyrinth areas of the South ASP P&VG. Each labyrinth area contains a sump as follows:

- SI-233 in the Pump and Valve Area 105/208A (South ASP Labyrinth #3 / Room R135A), and
- SI-234 in the Pump and Valve Area 105/208B (South ASP Labyrinth #2 / Room R135B).

4.3.5 System Control Features and Interlocks

4.3.5.1 System Monitoring

The CSSX Sump System has instrumentation to monitor the status of the system and initiate corrective actions if necessary. Remote indications are provided to the DCS.

See Table 4-3 for a listing of System Monitoring Instrumentation.

Table 4-3. CSSX Sump System Monitoring Instrumentation

Equipment/ Instrument Number	P&ID	Scale Sheet	Monitored Variable	Indications
LIT-1464	M-M6-J-0064 SH1[79]	J-JZ-J-00542, *SWPF LI-1464 Labyrinth #1 Sump Level*[85]	Pump & Valve Area 109A/B Sump Liquid Level	Inches
LIT-1676	M-M6-J-0138[83]	J-JZ-J-00894, *SWPF LI-1676 South ASP Labyrinth #2 Sump Level*[86]	Pump and Valve Area 105/208B Sump Liquid Level	Inches
LIT-1680	M-M6-J-0138[83]	J-JZ-J-00895, *SWPF LI-1680 South ASP Labyrinth #3 Sump Level*[87]	Pump and Valve Area 105/208A Sump Liquid Level	Inches
HV-2000	M-M6-J-0126[82]	N/A	Valve Position	Open/Closed
LIT-2002	M-M6-J-0126[82]	J-JZ-J-00188[47]	SMP-206 Liquid Level	Inches
HV-2003	M-M6-J-0126[82]	N/A	Valve Position	Open/Closed
HV-2009	M-M6-J-0126[82]	N/A	Valve Position	Open/Closed
HV-2010	M-M6-J-0126[82]	N/A	Valve Position	C-B/C-A
LIT-2011	M-M6-J-0150[84]	J-JZ-J-01085, *SWPF LI-2011 East CSSX Tank Cell Sump Level*[88]		Inches
LIT-2012	M-M6-J-0150[84]	J-JZ-J-00634, *SWPF LI-2012 Contactor Floor Dain Loop Seal Level*[89]	Contactor Floor Drain Loop Seal to East CSSX Tank Cell Sump Level	Inches
HV-2105	M-M6-J-0064 SH1[79]	N/A	Valve Position	Open/Closed
LIT-2122	M-M6-J-0064 SH1[79]	J-JZ-J-00543, *SWPF LI-2122 CSSX Labyrinth #2 Sump Level*[90]	CSSX Pump Area 205A/B Sump Liquid Level	Inches
LIT-2155	M-M6-J-0064 SH1[79]	J-JZ-J-00544, *SWPF LI-2155 CSSX Labyrinth #6 Sump Level*[91]	CSSX Pump Area 215/217B Sump Liquid Level	Inches

Table 4-3. CSSX Sump System Monitoring Instrumentation (cont.)

Equipment/ Instrument Number	P&ID	Scale Sheet	Monitored Variable	Indications
LIT-2190	M-M6-J-0064 SH1[79]	J-JZ-J-00545, *SWPF LI-2190 Sample Pump and Valve Gallery Labyrinth Sump Level*[92]	Sample Pump Area Sump Liquid Level	Inches
LIT-2218	M-M6-J-0064 SH1[79]	J-JZ-J-00546, *SWPF LI-2218 CSSX Labyrinth #5 Sump Level*[93]	CSSX Pump Area 215/217A Sump Liquid Level	Inches
LIT-2240	M-M6-J-0064 SH1[79]	J-JZ-J-00547, *SWPF LI-2240 CSSX Labyrinth #3 Sump Level*[94]	CSSX Pump Area 202/204/206A Sump Liquid Level	Inches
LIT-2241	M-M6-J-0064 SH1[79]	J-JZ-J-00548, *SWPF LI-2241 CSSX Labyrinth #4 Sump Level*[95]	CSSX Pump Area 202/204/206B Sump Liquid Level	Inches
LIT-2244	M-M6-J-0064 SH1[79]	J-JZ-J-00549, *SWPF LI-2244 CSSX Pipe Chase Drain Loop Seal Level*[96]	CSSX Pipe Chase Drain Loop Seal level	Inches

4.3.5.2 Control Functions

In general, Operations is required to maintain CSSX Tank Cell Sump. If required, cell wash downs and sump pump-out are manual tasks performed by the Operator.

4.4 Operations

4.4.1 Initial Configuration

Sumps SMP-206 and SMP-217 require addition of process water to provide vent seals on the tank overflows. The CSSX Labyrinth Area Sumps and South ASP Area 105/208 Sumps are normally dry.

The contactor area floor drain (SI-962) gravity-drains to SMP-217. This drain line includes a loop seal with level indication.

4.4.2 System Startup

4.4.3 Normal Operations

<u>CSSX Tank Cell Sumps</u>

Operations will check the cell sump levels on a regular basis and, if necessary, add Process Water in order to maintain the dipped pipe seals.

Process Water is supplied by opening a manual isolation valve in the process water distribution header. Operations can add microbial control chemicals to the sumps, in order to prevent microbial growth, if required.

If the need arises to pump out a CSSX Tank Cell Sump, the relevant sump is routed to Transfer Pump (P-218) by the Operator positioning automated isolation valves.

Once the discharge route is selected, Pump P-218 is operated by supplying Plant Air via an automated supply valve to the drive. The valve is closed to stop the pump operation.

The pump and pipework can be flushed by opening isolation valves from the CSSX South Contactor/Tank Cell Flush Header. Process water that has provisions for chemical additions can be used for flushing the system.

CSSX Labyrinth Area Sumps

In normal plant operation, Operations can test the sump leak detection instruments. Process Water is supplied to the sump by opening a manual isolation valve from either the ASP and CSSX North Flush Header or the CSSX South P&VG Flush Header. Operations will regularly check that the drain manifold loop seal is above a minimum level and, if necessary, add Process Water via one of the sumps.

When pumps or valves are to be removed for maintenance, the equipment is decontaminated by using flush rings located in the CSSX P&VG. Process Water (or NaOH or HNO_3) is supplied by opening a manual isolation valve from either the ASP and CSSX North Flush Header or the CSSX South P&VG Flush Header. The Operator must ensure that the SDT (TK-208) has sufficient capacity to receive a flush ring discharge.

4.4.4 Off-Normal and Recovery Operation

Table 4-4 lists conditions (failures/malfunctions/interlocks) of system components and recommended actions.

Table 4-4. Failures/Malfunctions

Condition	Detection	Immediate Action	Recovery
Valve Failure	Failure Alarm in DCS	Stop transfer, isolate system.	Flush out piping and pumps to allow access to investigate

4.4.5 System Shutdown

Several factors can lead to the off-normal shutdown of the system. Misaligned valves, valve failures, and equipment failures would all lead to the system shutting down. In shutdown mode, the valves close and the pumps are shutdown.

5.0 SAST (TK-127)

5.1 System Functions

The SAST System collects, stores, and transfers spent 20 wt% HNO_3 used in chemical cleaning of the ASP and AFP CFF and pipework (see P-DB-J-00003[14]), including:

- ASP Filters (FLT-102A/B/C),
- Washing Filter (FLT-104), and
- AFP Filters (FLT-222A/B/C).

5.2 Operational Overview

The SAST (TK-127) receives spent 20 wt% HNO_3 from CSDT-A (TK-103) or CSDT-B (TK-223). Contents of the SAST (TK-127) are normally transferred to the AST-A (TK-101) via the ASDT Transfer Pumps (P-601A/B).

5.3 Configuration Information

5.3.1 Description of System

Refer to P&IDs and PFDs listed in Table 5-1.

Table 5-1. P&IDs and PFDs

Diagram Number	Diagram Title
M-M5-J-0018	*SWPF Lab Drain Tank, Alpha Sorption Drain Tank and Spent Acid Storage Tank PFD (U)*[17]
M-M6-J-0115	*SWPF Process Building Spent Acid Storage Tank TK-127 P&ID (U)*[29]
M-M6-J-0062 SH1	*SWPF Process Building Alpha Sorption Drain Tank Transfer Pumps P-601A/B P&ID (U)*[27]
M-M6-J-0062 SH2	*SWPF Process Building Alpha Sorption Drain Tank Transfer Pumps P-601A/B Piping P&ID (U)*[28]

5.3.2 Major Components

See Table 5-2 for a list of major components.

Table 5-2. Major Components

Component	Description
SAST (TK-127)	Capacity to Overflow: 4,300 gallons (M-CLC-J-00088, *Spent Acid Storage Tank Sizing Calculation*[97]) Dimensions: 6 ft diameter x 20 ft horizontal T/T (M-CLC-J-00088[97]) Design Features: • Stainless steel vessel; • Tank includes provisions for mixing; • Vented to the Process Vessel Vent Header to maintain vacuum, with respect to the ASDT Cell; • Tank has two redundant bubblers for level indication; and • Dipped overflow.
ASDT Transfer Pumps (P-601A/B)	To transfer SAST (TK-127) contents to AST-A (TK-101) at the end of the sludge washing cycle. Capacity: 50 gpm hp: 10

5.3.3 Stream Data

See Table 5-3 for a listing of Streams.

Table 5-3. Streams

Stream	Description
Input Streams	
Spent 20 wt% HNO_3	20 wt% HNO_3 used in chemical cleaning of CFF and pipework is drained to the SAST (TK-127). Properties: 1.12 s.g.(M-CLC-J-0143, *SWPF Mass Balance Model Calculations as a Result of Nitric Acid Replacing Oxalic Acid*[98])

5.3.4 Physical Location and Layout

The SAST (TK-127) is located in the ASDT Cell, in order to maximize gravity-drainage flow paths from the filter circuits.

The ASDT Transfer Pumps (P-601A/B) are located in the South ASP P&VG.

5.3.5 System Control Features and Interlocks

5.3.5.1 System Monitoring

The SAST System has instrumentation to monitor the status of the system and initiate corrective actions if necessary. Remote indications are provided to the DCS.

See Table 5-4 for a listing of System Monitoring Instrumentation. The majority of these components are also associated with the ASDT (TK-601).

Table 5-4. SAST System Monitoring Instrumentation

Equipment/ Instrument Number	P&ID	Scale Sheet	Monitored Variable	Indications
HV-1152	M-M6-J-0062 SH2[28]	N/A	Valve Position	Open/Closed
PIT-7201	M-M6-J-0062 SH1[27]	J-JZ-J-01200[51]	P-601A Discharge Pressure	psig
PIT-7203	M-M6-J-0062 SH1[27]	J-JZ-J-01201[52]	P-601B Discharge Pressure	psig
FE-7224	M-M6-J-0062 SH1[27]	J-JZ-J-00536[54]	P-601A Flow Rate/Totalized Flow	gpm/Gallons
SC-7227	M-M6-J-0062 SH1[27]	J-JZ-J-01223[55]	P-601A Speed Control	0-100%
P-601A	M-M6-J-0062 SH1[27]	N/A	Pump Status	Run/Off
SC-7228	M-M6-J-0062 SH1[27]	J-JZ-J-01224[56]	P-601B Speed Control	0-100%
P-601B	M-M6-J-0062 SH1[27]	N/A	Pump Status	Run/Off
PDIT-7260	M-M6-J-0115[29]	J-JZ-J-00597[63]	SAST (TK-127) Vapor Space Differential Pressure	Inches Water Vacuum
LIT-7261	M-M6-J-0115[29]	J-JZ-J-0020[64]	SAST (TK-127) Tank Liquid Level	Gallons
DIT-7261	M-M6-J-0115[29]	J-JZ-J-00595[65]	SAST (TK-127) Tank Liquid Density	s.g.
TE-7263	M-M6-J-0115[29]	J-JZ-J-00598[66]	SAST (TK-127) Tank Liquid Temperature	ºF
LIT-7265	M-M6-J-0115[29]	J-JZ-J-0021[67]	SAST (TK-127) Tank Liquid Level	Gallons
DIT-7265	M-M6-J-0115[29]	J-JZ-J-00596[68]	SAST (TK-127) Tank Liquid Density	s.g.
HV-7271	M-M6-J-0062 SH1[27]	N/A	Valve Position	C-B/C-A/A-B
HV-7272	M-M6-J-0062 SH1[27]	N/A	Valve Position	C-B/C-A/A-B
HV-7273	M-M6-J-0062 SH1[27]	N/A	Valve Position	Open/Closed
HV-7274	M-M6-J-0062 SH1[27]	N/A	Valve Position	Open/Closed
HV-7275	M-M6-J-0062 SH1[27]	N/A	Valve Position	Open/Closed

Table 5-4. SAST System Monitoring Instrumentation (cont.)

Equipment/ Instrument Number	P&ID	Scale Sheet	Monitored Variable	Indications
HV-7276	M-M6-J-0062 SH1[27]	N/A	Valve Position	Open/Closed
FE-7277	M-M6-J-0062 SH1[27]	J-JZ-J-00537[69]	P-601B Flow Rate/Totalized Flow	gpm/Gallons
HV-7278	M-M6-J-0062 SH2[28]	N/A	Valve Position	B-C/A-C/A-B
HV-7279	M-M6-J-0062 SH2[28]	N/A	Valve Position	A-C/B-C/B-A
HV-7280	M-M6-J-0062 SH2[28]	N/A	Valve Position	Open/Closed
HV-7281	M-M6-J-0062 SH2[28]	N/A	Valve Position	Open/Closed
HV-7282	M-M6-J-0062 SH2[28]	N/A	Valve Position	Open/Closed
FE-7283	M-M6-J-0062 SH2[28]	J-JZ-J-00538[70]	P-601A/B Flow Rate	gpm
FV-7283	M-M6-J-0062 SH2[28]	N/A	Valve Position	0-100%
HV-7284	M-M6-J-0062 SH2[28]	N/A	Valve Position	Open/Closed
FE-7285	M-M6-J-0062 SH2[28]	J-JZ-J-00539[71]	P-601A/B Flow Rate	gpm
FV-7285	M-M6-J-0062 SH2[28]	N/A	Valve Position	0-100%
HV-7286	M-M6-J-0062 SH1[27]	N/A	Valve Position	Open/Closed
HV-7287	M-M6-J-0062 SH2[28]	N/A	Valve Position	Open/Closed
HV-7288	M-M6-J-0062 SH1[27]	N/A	Valve Position	Open/Closed
HV-7289	M-M6-J-0062 SH2[28]	N/A	Valve Position	Open/Closed
FV-7290	M-M6-J-0062 SH2[28]	N/A	Valve Position	0-100%
FV-7291	M-M6-J-0062 SH2[28]	N/A	Valve Position	0-100%
VE-9271B/C/D	M-M6-J-0062 SH1[27]	N/A	P-601B Vibration	Cycles/second Inches/second
VE-9272B/C/D	M-M6-J-0062 SH1[27]	N/A	P-601A Vibration	Cycles/second Inches/second

5.3.5.2 Control Functions

Table 5-5-5 is a list of control loops for the SAST System. These control loops are also associated with the ASDT (TK-601).

Table 5-5-5. Control Loops

Loop Number	P&ID	Scale Sheet	Controlled Variable	Set Point
FIC-7283	M-M6-J-0062 SH2[28]	J-JZ-J-00538[70]	P-601A/B Flow to Analytical Laboratory	Operator-entered
FIC-7285	M-M6-J-0062 SH2[28]	J-JZ-J-00539[71]	P-601A/B Flow to Analytical Laboratory	Operator-entered

Operations initiated by the Operator, via the DCS, include ASP filter shell and back pulse tank draindown, AFP filter shell and back pulse tank draindown, and ASDT pump transfer.

Interlocks are manually reset by the Operator.

5.4 Operations

5.4.1 Initial Configuration

The SAST (TK-127) primarily provides a means for collecting spent 20 wt% HNO_3 from chemical cleaning of the CFF and pipework. SAST (TK-127) is empty for SWPF plant startup operations.

5.4.2 System Startup

Equipment is started by the Operator via the DCS. Transfer Pumps P-601A/B can pump from either the ASDT (TK-601) or SAST (TK-127) via a pump suction cross-over line. Transfer Pump P-601A typically supports operations in the ASDT (TK-601) and Transfer Pump P-601B typically supports operations in the SAST (TK-127), however either pump can be used with either tank. For certain operations (e.g., turbo-mixing) both pumps simultaneously support a single tank. Turbo mixing refers to using both pumps to supply both eductors (EDT-127-1 and EDT-127-2) in the SAST (TK-127).

Pump P-601B operation is initiated when a minimum SAST (TK-127) level has been exceeded and operates in recycle mode.

5.4.3 Normal Operations

Spent Acid is received in the SAST (TK-127) from the following:

- ASP Filter Loop (FLT-102A/B/C) and Wash Filter Loop (FLT-104),
- Transfer from CSDT-A (TK-103), and
- Transfer from CSDT-B (TK-223).

Filter loop draindowns are controlled automatically by the DCS at the completion of acid cleaning of the filters. Transfers are initiated by the Operator.

Prior to sampling and/or transfers, the tank contents are mixed in recirculation mode. A portion of the recycle flow can be routed to Lab Hot Cell #2 for sampling and analysis.

The tank contents are adjusted using 25 wt% NaOH from the Neutralization Tank (TK-317), and the adjusted contents are transferred to AST-A (TK-101) for adjustment of the incoming Liquid Radioactive Waste. Only one pump, either P-601A or P-601B, can discharge into the manifold at any time.

The process sequences for the SAST system are included in Section 3.0 of X-PCD-J-00005[72].

5.4.4 Off-Normal and Recovery Operation

Table 5-6 lists conditions (failures/malfunctions/interlocks) of system components and recommended actions.

5.4.5 System Shutdown

Routes into the SAST (TK-127) are isolated and P-601A/B is stopped during normal shutdown.

Several factors can lead to off-normal shutdown of the system. Misaligned valves, valve failures, and equipment failures would all lead to the system shutting down. In shutdown mode, the valves close and the pumps are shutdown.

Table 5-6. Failures/Malfunctions

Condition	Detection	Immediate Action	Recovery
SAST (TK-127) High Level	Level Indicators (LI-7261 and LI-7265)	Stop all inputs into SAST (TK-127).	Use P-601A/B to reduce level.
ASDT Transfer Pump (P-601A/B) Failure	Low Flow Alarms (FI-7224 and FI-7277)	Switch to the alternate duty pump.	The alternate duty pump can be used until repairs are completed. The failed pump and associated piping will be flushed and drained prior to P&VG entry.
Equipment or Valve Failure	Failure Alarm in DCS	Perform Aborting/Stopping Logic for Running Sequence	The alternate duty pump can be used until maintenance can be performed. For maintenance, flush out piping and pumps to allow access to investigate.
Low Plant Air Header Pressure	Pressure Indicator (PI-4435)	Perform Aborting/Stopping Logic for Running Sequence.	Operator to investigate cause of problem.
Low Process Building Exhaust Fan dP	Differential Pressure Indicator (PDI-4077)	Perform Aborting/Stopping Logic for Running Sequence.	Operator to investigate cause of problem.

6.0 AFDT (TK-228)

6.1 System Functions

The AFDT System collects, stores, and transfers drainage and waste effluents generated by the AFP (see P-DB-J-00003[14]). The main sources of drainage are the following:

- Draindown of AFP filter and pipework,
- AFP pump casing draindown,
- AFP Sample Pump draindown, and
- AFF Vent Demister (DMST-207) flushing.

6.2 Operational Overview

AFDT (TK-228)

The AFDT (TK-228) receives drainage from the AFP. AFDT (TK-228) contents are discharged to Alpha Sorption Tank-B (AST-B) (TK-221) via the AFDT Transfer Pump (P-228).

AFF Diked Area Sumps

The AFF is divided into diked areas, each of which contains a sump:

- Intermediate Storage Tank (IST) (TK-220)/AST-B Area Sump (SMP-226),
- Decontaminated Salt Solution Hold Tank (DSSHT)/Filter Feed Tank-B (FFT-B) Diked Area Sump (West) (SMP-227),
- DSSHT/FFT-B Diked Area Sump (East) (SMP-210), and
- AFDT Area Sump (SMP-228).

The floors of the diked areas are sloped toward a sump in that area to direct any leakage into the sump. The sumps provide a collection point for spillages and tank overflows. Diaphragm pumps are installed to pump out the respective sump.

SMP-228 has a depth of 35 inches (30 inches top to tangent). The other AFF sump depths are standardized to 45 inches (36 inches top to tangent). The minimum required design depth of the sumps was established as 30 inches (see M-CLC-J-00083[15]).

The sumps are also sized to accommodate the dip pipes routed to the sump. Typically, the sumps are 2 to 4 ft in diameter.

Each tank overflow line is dipped into the sump to maintain a ventilation seal.

6.3 Configuration Information

6.3.1 Description of System

Refer to P&IDs listed in Table 6-1.

Table 6-1. P&IDs

Diagram Number	Diagram Title
M-M6-J-0063	*SWPF Alpha Finishing Facility Alpha Finishing Drain Tank TK-228 P&ID (U)*[99]
M-M6-J-0127	*SWPF Alpha Finishing Facility Diked Area Sumps P&ID (U)*[100]
M-M6-J-0052	*SWPF Alpha Finishing Facility Alpha Sorption Filter FLT-222A P&ID (U)*[101]
M-M6-J-0053	*SWPF Alpha Finishing Facility Alpha Sorption Filter FLT-222B P&ID (U)*[102]
M-M6-J-0054	*SWPF Alpha Finishing Facility Alpha Sorption Filter FLT-222C P&ID (U)*[103]

6.3.2 Major Components

See Table 6-2 for a list of major components.

Table 6-2. Major Components

Component	Description
AFDT (TK-228)	Capacity to Overflow: 1,800 gallons (M-CLC-J-00087, *SWPF Alpha Finishing Drain Tank Sizing Calculation TK-228*)[104] Dimensions: 6 ft diameter x 7 ft-8 inches horizontal T/T (M-CLC-J-00087[104]) Design Features: • Stainless steel vessel, • Tank includes provisions for mixing, • Vented to the passive AFF PVVS, • Tank has one bubbler for level indication and one radar level instrument for level indication, and • Dipped overflow.
AFDT Transfer Pump (P-228)	To transfer the AFDT (TK-228) contents to AST-B (TK-221). Capacity: 25 gpm hp: 10

Table 6-2. Major Components (cont.)

Component	Description
AFDT Area Sump (SMP-228)	To collect spillages and drainage from the AFDT area and provide a vent seal on the AFDT overflow dip pipe routed to the sump. Dimensions: 2 ft diameter x 2 ft 6 in Top/Tangent (M-M6-J-0127[100]) Design Features: • Stainless steel-lined, and • Sump has one level instrument for indication.
IST/AST-B Area Sump (SMP-226)	To collect spillages and drainage from the IST/AST-B diked area and to provide a vent seal on the IST (TK-220) and AST-B (TK-221), and AST-B breakpot overflow dip pipes routed to the sump. Dimensions: 4 ft diameter x 3 ft Top/Tangent (depth) (M-M6-J-0127[100]) Design Features: • Stainless steel-lined, and • Sump has one level instrument for indication.
DSSHT/FFT-B Diked Area Sump (West) (SMP-227)	To collect spillages and drainage from the DSSHT/FFT-B diked area and provide a vent seal on the DSSHT (TK-207), Monosodium Titanate/Sludge Transfer Tank (TK-224), FFT-B (TK-222), CSDT-B (TK-223), Lab Collection Tank-A (TK-236), Lab Collection Tank-B (TK-237), and CSDT-B breakpot overflow dip pipes routed to the sump. Dimensions: 4 ft diameter x 3 ft Top/Tangent (depth) (M-M6-J-0127[100]) Design Features: • Stainless steel-lined, and • Sump has one level instrument for indication.
DSSHT/FFT-B Diked Area Sump (East) (SMP-210)	To collect spillages and drainage from the DSSHT/FFT-B diked area. Dimensions: 4 ft diameter x 3 ft Top/Tangent (depth) (M-M6-J-0127[100]) Design Features: • Stainless steel-lined, and • Sump has one level instrument for indication.
AFDT Area Sump Pump (P-228-1)	To transfer SMP-228 contents to AST-B (TK-221). Capacity: 5 gpm Drive: Pneumatic
IST/AST-B Area Sump Pump (P-226)	To transfer SMP-226 contents to AST-B (TK-221). Capacity: 5 gpm Drive: Pneumatic
DSSHT/FFT-B Diked Area Sump Pump (P-227)	To transfer SMP-227 contents to AST-B (TK-221). Capacity: 5 gpm Drive: Pneumatic
DSSHT/FFT-B Diked Area Sump Pump (P-210)	To transfer SMP-210 contents to AST-B (TK-221). Capacity: 10 gpm Drive: Pneumatic

6.3.3 Stream Data

Refer to X-SD-J-00004[7] for information on the relevant streams.

6.3.4 Physical Location and Layout

AFDT (TK-228)

The AFDT (TK-228) is located on a recessed floor area of the AFF at an approximate floor elevation of 90 ft, in order to maximize gravity-drainage flow paths from the AFP.

AFDT Transfer Pump (P-228)

AFDT Transfer Pump (P-228) is located outside the AFF recessed floor area near the AFDT (TK-228).

AFF Diked Area Sumps and Sump Pumps

The IST/AST-B Area Sump (SMP-226) and the IST/AST-B Area Sump Pump (P-226) are located near the IST (TK-220) and AST-B (TK-221). The DSSHT/FFT-B Diked Area Sump (West) (SMP-227) and DSSHT/FFT-B Diked Area Sump Pump (P-227) are located between the DSSHT (TK-207) and FFT-B (TK-222). The DSSHT/FFT-B Diked Area Sump (East) (SMP-210) and DSSHT/FFT-B Diked Area Sump Pump (East) (P-227) are located between the Filter Recirculation Pumps (P-222A/B/C) and Filter Recirculation Coolers (HX-222A/B/C). The AFDT Area Sump (SMP-228) is located in the recessed AFDT diked area. The AFDT Area Sump Pump (P-228-1) is located near the recessed AFDT diked area.

6.3.5 System Control Features and Interlocks

6.3.5.1 System Monitoring

The AFDT System has instrumentation to monitor the status of the system and initiate corrective actions, if necessary. Remote indications are provided to the DCS.

See Table 6-3 for a listing of System Monitoring Instrumentation.

Table 6-3. AFDT System Monitoring Instrumentation

Equipment/ Instrument Number	P&ID	Scale Sheet	Monitored Variable	Indications
LIT-2205	M-M6-J-0127[100]	J-JZ-J-00630, *SWPF LI-2205 DSSHT/FFT-B Diked Area Sump (East) Level*[105]	SMP-210 Liquid Level	Inches
LIT-2247	M-M6-J-0127[100]	J-JZ-J-00631, *SWPF LI-2247 AFDT Area Sump Level*[106]	SMP-228 Liquid Level	Inches
HV-7032	M-M6-J-0063[99]	N/A	Valve Position	C-A/C-B/Closed
PIT-7210	M-M6-J-0063[99]	J-JZ-J-01202, *SWPF PI-7210 AFDT Xfer Pump Disch Pressure*[107]	P-228 Discharge Pressure	psig
LIT-7231	M-M6-J-0063[99]	J-JZ-J-00069, *SWPF LI-7231 AFDT Level*[108]	AFDT (TK-228) Liquid Level	Gallons
LIT-7212	M-M6-J-0063[99]	J-JZ-J-00068, *SWPF LI-7212 AFDT Level*[109]	AFDT (TK-228) Liquid Level	Gallons
DIT-7212	M-M6-J-0063[99]	J-JZ-J-00540, *SWPF DI-7212 AFDT Density*[110]	AFDT (TK-228) Liquid Density	s.g.
FV-7230	M-M6-J-0063[99]	N/A	Valve Position	0-100%
FE-7230	M-M6-J-0063[99]	J-JZ-J-00541, *SWPF FIC-7230 AFDT Discharge Flow*[111]	P-228 Flow Rate/Totalized Flow	gpm/Gallons
HV-7214	M-M6-J-0063[99]	N/A	Valve Position	C-A/C-B/Closed
LIT-7011	M-M6-J-0127[100]	J-JZ-J-00632, *SWPF LI-7011 IST/AST-B Sump Level*[112]	SMP-226 Liquid Level	Inches
LIT-7034	M-M6-J-0127[100]	J-JZ-J-00633, *SWPF LI-7034 DSSHT/FFT-B Diked Area Sump (West) Level*[113]	SMP-227 Liquid Level	Inches
SC-7232	M-M6-J-0063[99]	J-JZ-J-01225, *SWPF SIC-7232 AFDT Xfer Pump Speed*[114]	P-228 Speed Control	0-100%
P-228	M-M6-J-0063[99]	N/A	Run Status	Run/Off

6.3.5.2 Control Functions

Table 6-6-4 is a list of control loops for the AFDT System.

Table 6-6-4. Control Loops

Loop Number	P&ID	Scale Sheet	Controlled Variable	Set Point
FIC-7230	M-M6-J-0063[99]	N/A	P-228 Recirculation Flow Rate	Operator-entered

Operations initiated by the Operator, via the DCS, include AFP filter shell and back pulse tank draindown, AFDT pump transfer, and AFF sump pump-out.

Interlocks are manually reset by the Operator.

6.4 Operations

6.4.1 Initial Configuration

The AFDT (TK-228) primarily provides a means for draindown of process equipment in the AFP for maintenance purposes.

The AFDT (TK-228) is empty for SWPF plant startup operations. Sumps SMP-210, -226, -227, and -228 require addition of process water to provide vent seals on the tank overflows.

6.4.2 System Startup

Equipment is started by the Operator via the DCS. AFDT Transfer Pump (P-228) operation can be initiated when a minimum AFDT (TK-228) level has been exceeded.

6.4.3 Normal Operations

AFF Diked Area Sumps

Operations will regularly monitor the sump depths and add Process Water, as necessary, from the supply header in order to maintain the required vent seal depth. The sump level is monitored and displayed in the Control Room. A low-low alarm is raised to warn the Operator that the sump is to be refilled.

Pump-out of the sumps is a manual operation. The Operator connects the required diaphragm pump to the Plant Air supply, opens the pump discharge valve, and opens the air isolation valve in order to operate the pump.

High and high-high level alarms are generated to warn of a rising level in the sump and possible tank overflow.

AFF Filter Circuit Draindown

Draindown of a filter circuit is initiated by the Operator via the DCS. The circuit is drained to either AFDT (TK-228) or CSDT-B (TK-223), depending on the solution:

- Process solution is drained to AFDT (TK-228), and
- Filter chemical cleaning solutions (1.0M NaOH or 20 wt% HNO_3) are drained to CSDT-B (TK-223).

Each filter shell and back pulse tank includes a drain line with an automated isolation valve. Drain lines from the three circuits feed a common header containing a three-way, two-flow position automated valve. This valve routes the stream to either the AFDT (TK-228) or CSDT-B (TK-223).

AFDT (TK-228)

The AFDT (TK-228) level is monitored by the DCS; a high alarm is generated to alert the Operator that a pump-out is required.

The Operator initiates the pump operation via the DCS and a recirculation automated valve is opened to allow for mixing of the AFDT (TK-228) contents.

The Operator selects to discharge to either AST-B (TK-221) or Lab Glovebox #9, if a sample needs to be taken. The flow is monitored and totalized.

The pump is stopped either on low-low tank level in AFDT (TK-228) or high-high level in AST-B (TK-221).

The process sequences for the AFDT system are included in Section 5.0 of X-PCD-J-00005[72].

6.4.4 Off-Normal and Recovery Operation

Table 6-5 lists conditions (failures/malfunctions/interlocks) of system components and recommended actions.

Table 6-5. Failures/Malfunctions

Condition	Detection	Immediate Action	Recovery
AFDT (TK-228) High Level	Level Indicators (LI-7212 and LI-7231)	Stop all inputs into AFDT (TK-228).	Use P-228 to reduce level.
P-228 Failure	Low Flow Alarm (FI-7230)	Isolate pump.	Perform repair on P-228.
AFF Diked Area Sump Pumps Failure	No level change in sump.	Isolate pump.	Perform repair on pump.

Table 6-5. Failures/Malfunctions (cont.)

Condition	Detection	Immediate Action	Recovery
Low Plant Air Header Pressure	Pressure Indicator (PI-4435)	Perform Aborting/Stopping Logic for Running Sequence.	Operator to investigate cause of problem.

6.4.5 System Shutdown

Air supplies to the diaphragm pumps are isolated and vented. The filter drain routing valve to AFDT (TK-228) or CSDT-B (TK-223) is moved to the closed position.

Several factors can lead to the off-normal shutdown of the system. Misaligned valves, valve failures, and equipment failures would all lead to the system shutting down. In shutdown mode, the valves close and the pumps are shutdown.

7.0 LAB DRAIN TANK (TK-235)

7.1 System Functions

The Lab Drain Tank System collects, stores, and transfers drainage and wastes effluents generated by the Analytical Laboratory (see P-DB-J-00003[14]). The main sources of drainage are:

- Lab Hot Cell #1, 2, 3, and 4 Sumps,
- Solvent Adjustment HX-250 area drain,
- Lab Hot Cell #1 and #2 Sample Storage Boxes,
- Sample returns from Lab Hot Cell #2, and
- Lab Glovebox Drain Header.

The drain lines from the Laboratory Hot Cells and AFF glovebox will channel spills (waste and/or solvent) to the Lab Drain Tank (TK-235). The drain lines mitigate exposure to facility workers by directing waste and solvent leakage to the Lab Drain Tank (TK-235).

7.2 Operational Overview

The Lab Drain Tank (TK-235) is a collection point for effluent drainage from the Analytical Laboratory. Lab Drain Tank (TK-235) contents are discharged to the ASDT (TK-601), SDT (TK-208), or the Drum Off Station via the Lab Drain Tank Sample Pump (SP-235), depending on the sample analysis. Sample pump SP-235 transfers the Lab Drain Tank (TK-235) contents to Lab Hot Cell #2 (HC-002) for sampling.

7.3 Configuration Information

7.3.1 Description of System

Refer to P&IDs and PFDs listed in Table 7-1.

Table 7-1. P&IDs and PFDs

Diagram Number	Diagram Title
M-M5-J-0018	*SWPF Lab Drain Tank, Alpha Sorption Drain Tank and Spent Acid Storage Tank PFD (U)*[17]
M-M6-J-0109	*SWPF Process Building Lab Hot Cell #2 TK-202 and TK-208 Samplers P&ID (U)*[116]
M-M6-J-0113	*SWPF Process Building Lab Drain Tank TK-235 P&ID (U)*[117]
M-M6-J-0152	*SWPF Process Building Sample Pumps SP-102, SP-103 and SP-235 P&ID (U)*[118]

7.3.2 Major Components

See Table 7-2 for a list of major components.

Table 7-2. Major Components

Component	Description
Lab Drain Tank (TK-235)	Capacity to Overflow: 600 gallons (M-CLC-J-00089[115]) Dimensions: 4 ft diameter x 6 ft-8 inches T/T (M-CLC-J-00089[115]) Design Features: • Stainless steel vessel; • Vented to the PVVS to maintain vacuum, with respect to the ASDT Cell; • Tank has one bubbler for level indication; and • Dipped overflow.
Lab Drain Tank Sample Pump (SP-235)	To transfer the Lab Drain Tank (TK-235) contents to ASDT (TK-601), SDT (TK-208), or the Drum Off Station and to transfer to Lab Hot Cell #2 for Lab Drain Tank (TK-235) sampling. Capacity: 4 gpm hp: 1.5 hp
HX-250 Solvent Adjustment Heat Exchanger Loop Seal Ejector (EJT-250)	Capacity: 7.0 gpm Design Features: • Stainless steel
Lab Drain Tank Loop Seal Ejector (EJT-235-1)	Capacity: 7.0 gpm Design Features: • Stainless steel
Lab Drain Tank Loop Seal Ejector (EJT-235-2)	Capacity: 7.0 gpm Design Features: • Stainless steel

7.3.3 Stream Data

Refer to: X-SD-J-000068 for information on the relevant streams.

7.3.4 Physical Location and Layout

The Lab Drain Tank (TK-235) is located in the ASDT Cell, in order to maximize gravity-drainage flow paths. The tank is located at an elevation suitable for receiving gravity flows from the Analytical Laboratory.

Lab Drain Tank Sample Pump (SP-235) is located in the Sample P&VG.

7.3.5 System Control Features and Interlocks

7.3.5.1 System Monitoring

The Lab Drain Tank System has instrumentation to monitor the status of the system and initiate corrective actions if necessary. Remote indications are provided to the DCS.

See Table 7-3 for a listing of System Monitoring Instrumentation.

Table 7-3. Lab Drain Tank System Monitoring Instrumentation

Equipment/ Instrument Number	P&ID	Scale Sheet	Monitored Variable	Indications
LIT-1254	M-M6-J-0113[117]	J-JZ-J-00520, *SWPF LI-1254 Lab Hot Cell Drain Loop Seal to LDT Level*[119]	Lab Hot Cell Drain Loop Seal Level	Inches
LIT-7124	M-M6-J-0109[116]	J-JZ-J-00591, *SWPF LI-7124 Sol Adjust HX Area Drain Loop Seal Level*[120]	Solvent Adjustment HX-250 Area Drain Loop Seal Level	Inches
LIT-7252	M-M6-J-0113[117]	J-JZ-J-00053, *SWPF LI-7252 Lab Drain Tank Level*[121]	Lab Drain Tank (TK-235) Liquid Level	Gallons
LIT-7256	M-M6-J-0113[117]	J-JZ-J-01174, *SWPF LI-7256 Lab Glove Box Drain Loop Seal Level*[122]	Glovebox Drain Header Loop Seal Level	Inches
HV-1831	M-M6-J-0152[118]	N/A	Valve Position	Open/Closed
HV-1834	M-M6-J-0152[118]	N/A	Valve Position	Open/Closed
HV-1836	M-M6-J-0152[118]	N/A	Valve Position	Open/Closed
HV-1830	M-M6-J-0152[118]	N/A	Valve Position	Open/Closed

Table 7-3. Lab Drain Tank System Monitoring Instrumentation (cont.)

Equipment/ Instrument Number	P&ID	Scale Sheet	Monitored Variable	Indications
SC-1835	M-M6-J-0152[118]	J-JZ-J-01108, *SWPF SIC-1835 Lab Drain Tank Sample Pump Speed*[123]	SP-235 Speed Control	0-100%
SP-235	M-M6-J-0152[118]	N/A	Run Status	Run/Off
HV-1837	M-M6-J-0152[118]	N/A	Valve Position	Open/Closed
FE-1838	M-M6-J-0152[118]	J-JZ-J-00640, *SWPF FIC-1838 LDT Sample Pump Flow*[124]	SP-235 Flow Rate	gpm
HV-1840	M-M6-J-0152[118]	N/A	Valve Position	Open/Closed
HV-1854	M-M6-J-0152[118]	N/A	Valve Position	Open/Closed
PIT-2014	M-M6-J-0152[118]	J-JZ-J-01180, *SWPF PI-2014 Lab Drain Tank Sample Pump Disch Pressure*[125]	SP-235 Discharge Pressure	psig
PDIT-7252	M-M6-J-0152[118]	N/A		In. w.c.
VE-9266B/C	M-M6-J-0152[118]	N/A	SP-235 Vibration	Cycles/second Inches/second

7.3.5.2 Control Functions

There are no control loops in the Lab Drain Tank System.

Operation is initiated by the Operator via the DCS. Operations include sampling of the Lab Drain Tank (TK-235) and discharge of the Lab Drain Tank (TK-235) to the ASDT (TK-601), SDT (TK-208), or the Drum Off Station via the Lab Drain Tank Sample Pump (SP-235). Lab Drain Tank washdown is a manual operation performed by the Operator.

Interlocks are manually reset by the Operator.

7.4 Operations

7.4.1 Initial Configuration

The Lab Drain Tank (TK-235) is empty and its automated discharge routing valve is closed for SWPF plant startup operations.

There are three drain lines into the Lab Drain Tank (TK-235) that include a loop seal. These three loops seals have level indication and an associated ejector (EJT-250, EJT-235-1 and EJT-

235-2). These ejectors are used to periodically empty the loop seal to ensure that any accumulated solvent is transferred into the Lab Drain TankTK-235.

7.4.2 System Startup

Equipment is started by the Operator via the DCS.

7.4.3 Normal Operations

The Lab Drain Tank (TK-235) collects drainage from the various Analytical Laboratory areas and when needed, the tank is emptied.

The Operator initiates Sample Pump SP-235 operation via the DCS (refer to X-SD-J-00006[8]). The Operator opens an automated discharge routing valve on the Lab Drain Tank (TK-235) discharge line in order to empty the tank. The Lab Drain Tank (TK-235) is emptied to ASDT (TK-601), SDT (TK-208), or the Drum Off Station, depending on the sample analysis. The normal discharge route is to SDT (TK-208).

The routing valve remains open until a low-low level in the tank is reached or a high-high level in the destination tank is detected.

After the Lab Drain Tank (TK-235) is empty, the Operator can wash down the tank by opening an isolation valve in the ASP Tank and Cell Flush Header.

7.4.4 Off-Normal and Recovery Operation

Table 7-4 lists conditions (failures/malfunctions/interlocks) of system components and recommended actions.

Table 7-4. Failures/Malfunctions

Condition	Detection	Immediate Action	Recovery
Lab Drain Tank (TK-235) High Level	Level Indicator LI-7252)	Stop all inputs into Lab Drain Tank (TK-235).	Use SP-235 to reduce level.
SP-235 Failure	Low Flow Alarm (FI-1838)	Isolate pump.	Perform repair on SP-235.
Valve Failure	Failure Alarm in DCS	Stop transfer, isolate system.	Flush out piping and pumps to allow access to investigate.

7.4.5 System Shutdown

The tank is emptied to ASDT (TK-601), SDT (TK-208), or the Drum Off Station and the routing valve is then closed. Feeds are isolated.

Several factors can lead to the off-normal shutdown of the system. Misaligned valves, valve failures, and equipment failures would all lead to the system shutting down. In shutdown mode, the valves close and the pumps are shutdown.

8.0 LOW LEVEL DRAIN TANK (TK-604)

8.1 System Functions

The Low Level Drain Tank System collects, stores, and transfers low level drainage generated in the SWPF (see P-DB-J-00003[14]).

8.2 Operational Overview

The Low Level Drain Tank (TK-604) receives drainage from the following areas:

- Floor Drains, and
- AFF HEPA Filter Room Floor Drain.

Drain solutions are collected in the Low Level Drain Tank (TK-604). The tank contents are discharged to Lab Collection Tank-A (TK-236) or Lab Collection Tank B via the Low Level Drain Tank Transfer Pump (P-604).

8.3 Configuration Information

8.3.1 Description of System

Refer to P&ID listed in Table 8-1.

Table 8-1. P&IDs

Diagram Number	Diagram Title
M-M6-J-0147	*SWPF Alpha Finishing Facility Low Level Drain Tank TK-604 P&ID (U)*[32]

8.3.2 Major Components

See Table 8-2 for a list of major components.

Table 8-2. Major Components

Component	Description
Low Level Drain Tank (TK-604)	To collect low-level drainage from the SWPF. Capacity to Overflow: 300 gallons Dimensions: 3 ft diameter x 4 ft-2 inches horizontal T/T Design Features: • Stainless steel vessel, • Vented to the passive AFF PVVS, • Tank has one level instrument, and • Dipped overflow.
Low Level Drain Tank Transfer Pump (P-604)	To transfer sump contents to Operator-selected location (DSSHT (TK-207), Drum Off Station, ASDT (TK-601), or Truck Bay connection). Capacity: 60 gpm hp: 7.5 hp

8.3.3 Stream Data

See Table 8-3 for a listing of Streams.

Table 8-3. Streams

Stream	Description
Water	Process Water, possibly containing soap/detergents from washdown operations (see P-DB-J-00003[14]).

8.3.4 Physical Location and Layout

Low Level Drain Tank (TK-604)

The Low Level Drain Tank (TK-604) is located on a recessed floor area of the AFF at an approximate floor elevation of 90 ft, in order to maximize gravity-drainage flow paths.

Low Level Drain Tank Transfer Pump (P-604)

The Low Level Drain Tank Transfer Pump (P-604) is located outside the AFF recessed floor area near the AFDT (TK-228).

8.3.5 System Control Features and Interlocks

8.3.5.1 System Monitoring

The Low Level Drain Tank System has instrumentation to monitor the status of the system and initiate corrective actions, if necessary. Remote indications are provided to the DCS.

See Table 8-4 for a listing of System Monitoring Instrumentation.

Table 8-4. Low Level Drain Tank System Monitoring Instrumentation

Equipment/Instrument Number	P&ID	Scale Sheet	Monitored Variable	Indications
PIT-2008	M-M6-J-0147[32]	J-JZ-J-01178, *SWPF PI-2008 LLDT Pump Disch Pressure*[126]	P-604 Discharge Pressure	psig
LIT-7403	M-M6-J-0147[32]	J-JZ-J-00078, *SWPF LI-7403 Low Level Drain Tank Level*[127]	Low Level Drain Tank (TK-604) Liquid Level	Inches
LIT-7405	M-M6-J-0147[32]	J-JZ-J-01082, *SWPF LI-7405 Low Level Drain Tank Loop Seal Level*[128]	Floor Drain Header Loop Seal Liquid Level	Inches
SC-7406	M-M6-J-0147[32]	J-JZ-J-01226, *SWPF SIC-7406 Low Level Drain Tank Transfer Pump Speed*[129]	P-604 Speed Control	0-100%
P-604	M-M6-J-0147[32]	N/A	Pump Status	Run/Off

8.3.5.2 Control Functions

There are no control loops in the Low Level Drain Tank System.

Interlocks are manually reset by the Operator.

8.4 Operations

8.4.1 Initial Configuration

The Low Level Drain Tank (TK-604) is empty for SWPF plant startup operations.

Several AFF floor drains gravity-drain to the Low Level Drain Tank (TK-604). This drain line includes a loop seal with level indication and a manual valve for emptying the loop seal.

8.4.2 System Startup

Equipment is started by the Operator via the DCS.

8.4.3 Normal Operations

A high level alarm is generated to alert the Operator that the tank is full.

Pump P-604 is started and tank contents are transferred to Lab Collection Tank-A (TK-236). If Lab Collection Tank-A (TK-236) does not have sufficient capacity, the drain solution is transferred to Lab Collection Tank-B (TK-237).

The tank level is monitored by the Operator and the pump is stopped at a low level.

The process sequences for the LLDT system are included in Section 7.0 of X-PCD-J-00005[72].

8.4.4 Off-Normal and Recovery Operation

Table 8-5 lists conditions (failures/malfunctions/interlocks) of system components and recommended actions.

Table 8-5. Failures/Malfunctions

Condition	Detection	Immediate Action	Recovery
Tank High Level	Level Indicators (LI-7403)	None	Use P-604 to reduce level.
Tank Level Indicator Failure	Failure Alarm in DCS	None	Perform repair on level indicator.
P-604 Failure	No level change in sump.	Isolate pump.	Perform repair on P-604.
Equipment or Valve Failure	Failure Alarm in DCS	Perform Aborting/Stopping Logic for Running Sequence	For maintenance, flush out piping and pumps to allow access to investigate.
Low Plant Air Header Pressure	Pressure Indicator (PI-4435)	Perform Aborting/Stopping Logic for Running Sequence.	Operator to investigate cause of problem.
Low Process Building Exhaust Fan dP	Differential Pressure Indicator (PDI-4077)	Perform Aborting/Stopping Logic for Running Sequence.	Operator to investigate cause of problem.

8.4.5 System Shutdown

Several factors can lead to the off-normal shutdown of the system. Misaligned valves, valve failures, and equipment failures would all lead to the system shutting down. In shutdown mode, the valves close and the pumps are shutdown.

9.0 DRUM OFF/DECON AREA SUMP

9.1 System Functions

The Drum Off/Decon Area Sump System collects, stores, and transfers spray and effluent generated by the decontamination of equipment in the Drum Off/Decon Area (see P-DB-J-00003[14]).

9.2 Operational Overview

The Drum Off/Decon Area Sump System is a collection point for spray and effluent generated by the decontamination of equipment. The Drum Off/Decon Area Sump contents are discharged to the ASDT (TK-601), the Drum Off Station, the Truck Bay, or DSSHT (TK-207) via the Drum Off/Decon Area Sump Pump (P-605). Plant air, flush water, filter cleaning acid, nitric acid, and caustic utility drops are located in the room to support decon activities. The floor of the Drum Off/Decon Area is sloped toward the sump to direct any spray or effluent into the sump.

9.3 Configuration Information

9.3.1 Description of System

Refer to P&ID listed in Table 9-1.

Table 9-1. P&IDs

Diagram Number	Diagram Title
M-M6-J-0156	*SWPF Process Building Drum Off/Decon Area Sump P&ID (U)*[130]

9.3.2 Major Components

See Table 9-2 for a list of major components.

Table 9-2. Major Components

Component	Description
Drum Off/Decon Area Sump	To collect spray and effluent drainage generated by the decontamination of equipment. Dimensions: 2 ft diameter x 2 ft 6 in Top/Tangent Design Features: • Sump has a stainless steel liner, • Mixing of sump contents is provided by pump recirculation line, and • Sump has one level instrument for indication.
Drum Off/Decon Area Sump Pump (P-605)	To transfer sump contents to an Operator-selected location of the ASDT (TK-601), Drum Off Station, Truck Bay, or DSSHT (TK-207). Capacity: 5 gpm Drive: Pneumatic Design Features: Manual sample point in pump discharge line.

9.3.3 Stream Data

See Table 9-3 for a listing of Streams.

Table 9-3. Streams

Stream	Description
Water	Process Water, possibly containing soap/detergents from washdown operations (see P-DB-J-00003[14])
NaOH	Refer to: X-SD-J-00003[6]
HNO_3	Refer to: X-SD-J-00003[6]

9.3.4 Physical Location and Layout

The Drum Off/Decon Area Sump and Drum Off/Decon Area Sump Pump (P-605) are located in the Drum Off/Decon Area of the CPA.

9.3.5 System Control Features and Interlocks

9.3.5.1 System Monitoring

The Drum Off/Decon Area Sump System has instrumentation to monitor the status of the system and initiate corrective actions if necessary. Remote indications are provided to the DCS.

See Table 9-4 for a listing of System Monitoring Instrumentation.

Table 9-4. Drum Off/Decon Area Sump System Monitoring Instrumentation

Equipment/ Instrument Number	P&ID	Scale Sheet	Monitored Variable	Indications
LIT-7304	M-M6-J-0156[130]	J-JZ-J-00649, *SWPF LI-7304 Drum Off/Decon Area Sump Level*[131]	Drum Off/Decon Area Sump Liquid Level	Inches
HV-7305	M-M6-J-0156[130]	N/A	Valve Position	Open/Closed

9.3.5.2 Control Functions

There are no control loops in the Drum Off/Decon Area Sump System.

Interlocks are manually reset by the Operator.

9.4 Operations

9.4.1 Initial Configuration

The sump is empty. Pump P-605 is stopped.

9.4.2 System Startup

Equipment is started by the Operator via the DCS.

9.4.3 Normal Operations

Pump P-605 is started in recirculation mode by opening a solenoid valve on the Plant Air supply to the pump drive.

After a short period of recirculation, a sample is taken from a manual sample point for analysis. The analysis determines the pump discharge route to be used, as described below.

- To DSSHT (TK-207): This route is used if the sump contents are compatible for discharge to the Saltstone Production Facility (SPF).
- To ASDT (TK-601): This route is used if the sump contents are suitable for processing through the SWPF.
- To Drum Off Station: This route is used if the sump contents are incompatible for SWPF and SPF processes. For example, the solution may contain soap/detergents from washdowns. The route is used for small volumes of solution.
- To Truck Bay: This route is used for large volumes of solution that are incompatible for the SWPF and SPF. The solution is transferred to tanker trucks for outside SWPF disposal.

The sump level is monitored by the Operator and the pump is stopped at a low level.

9.4.4 Off-Normal and Recovery Operation

Table 8-5 lists conditions (failures/malfunctions/interlocks) of system components and recommended actions.

Table 9-5. Failures/Malfunctions

Condition	Detection	Immediate Action	Recovery
Sump High Level	Level Indicators (LI-7304)	Stop all inputs into the Drum Off/Decon Area Sump.	Use P-605 to reduce level.
Sump Level Indicator Failure	Failure Alarm in DCS	Stop all inputs into Drum Off/Decon Area Sump.	Perform repair on level indicator.
P-605 Failure	No level change in sump.	Isolate pump.	Perform repair on P-605.
Valve Failure	Failure Alarm in DCS	Stop transfer, isolate system.	Flush out piping and pumps to allow access to investigate.

9.4.5 System Shutdown

The Plant Air supply to the pump drive is isolated.

10.0 LAB COLLECTION TANK-A (TK-236) AND LAB COLLECTION TANK-B (TK-237)

10.1 System Functions

The Lab Collection Tank-A/B System collects, stores, and transfers drainage effluents from the Analytical Laboratory radio hoods, bench sinks, and the scrubber blowdown from the Analytical Laboratory exhaust airflow.

10.2 Operational Overview

The Analytical Laboratory exhaust air is treated by a scrubber to remove acid vapors and then filtered through a high-efficiency particulate air filter. Scrubber blowdown is gravity-drained to the Lab Collection Tank-A (TK-236) and Lab Collection Tank-B (TK-237) located in the AFF. Liquid drains from Analytical Laboratory cup sinks located inside the radio hoods and from the bench sinks are directed to the tanks. The Lab Collection Tank Pump (P-236) transfers the contents of Lab Collection Tank-A (TK-236) and Lab Collection Tank-B (TK-237) to the DSSHT (TK-207), or the Low Level Drain Tank Transfer Pump (P-604) discharge line, depending on sample analysis.

10.3 Configuration Information

10.3.1 Description of System

Refer to P&IDs listed in Table 10-1.

Table 10-1. P&IDs

Diagram Number	Diagram Title
M-M6-J-0169	*SWPF Alpha Finishing Facility Lab Collection Tank A TK-236 P&ID (U)*[132]
M-M6-J-0174	*SWPF Alpha Finishing Facility Lab Collection Tank B TK-237 and P-236 P&ID (U)*[133]

10.3.2 Major Components

See Table 10-2 for a list of major components.

Table 10-2. Major Components

Component	Description
Lab Collection Tank-A (TK-236)	Capacity: 1,800 gallons (M-M6-J-0169[132]) Dimensions: 5 ft-6 inches diameter x 10 ft-5 inches T/T (M-M6-J-0169[132]) Design Features: • Stainless steel vessel, • Tank includes provisions for mixing, • Vented to the passive AFF PVVS, • Tank has one bubbler and one radar for level indication, and • Dipped overflow.
Lab Collection Tank-B (TK-237)	Capacity: 1,800 gallons (M-M6-J-0169[132]) Dimensions: 5 ft-6 inches diameter x 10 ft-5 inches T/T (M-M6-J-0169[132]) Design Features: • Stainless steel vessel, • Tank includes provisions for mixing, • Vented to the passive AFF PVVS, • Tank has one bubbler and one radar for level indication, and • Dipped overflow.
Lab Collection Tank Pump (P-236)	Centrifugal pump used to transfer Lab Collection Tank-A (TK-236) and Lab Collection Tank-B (TK-237) contents. Capacity: 50 gpm at 51 ft total dynamic head (to be verified by calculation) hp: 7.5 Design Features: Pump has both draining and flushing capability.

10.3.3 Stream Data

See Table 10-3 for a listing of Streams.

Table 10-3. Streams

Stream	Description
Analytical Laboratory Bench Sink Drainage Effluents	Analytical Laboratory chemicals: aqueous, pH range of 5 to 11
Analytical Laboratory Scrubber Blowdown	Aqueous blowdown from Analytical Laboratory exhaust airflow
Analytical Laboratory Radio Hood Drainage Effluent	Analytical Laboratory chemicals: aqueous, pH range of 5 to 11

10.3.4 Physical Location and Layout

The Lab Collection Tank-A (TK-236), Lab Collection Tank-B (TK-237), and the Lab Collection Tank Pump (P-236) are located in the AFF.

10.3.5 System Control Features and Interlocks

10.3.5.1 System Monitoring

The Lab Collection Tank-A/B System has instrumentation to monitor the status of the system and initiate corrective actions if necessary. Remote indications are provided to the DCS.

See Table 10-4 for a listing of System Monitoring Instrumentation.

Table 10-4. Lab Collection Tank-A/B System Monitoring Instrumentation

Equipment/ Instrument Number	P&ID	Scale Sheet	Monitored Variable	Indications
LIT-1571	M-M6-J-0169[132]	J-JZ-J-00070, *SWPF LI-1571 Lab Collection Tank-A Level*[134]	Lab Collection Tank-A (TK-236) Liquid Level	Gallons
LIT-1572A	M-M6-J-0169[132]	J-JZ-J-00071, *SWPF LI-1572A Lab Collection Tank-A Level*[135]	Lab Collection Tank-A (TK-236) Liquid Level	Gallons
DIT-1572B	M-M6-J-0169[132]	J-JZ-J-00799, *SWPF DI-1572B Lab Collection Tank-A Density*[136]	Lab Collection Tank-A (TK-236) Liquid Density	s.g.
HV-1573	M-M6-J-0169[132]	N/A	Valve Position	Open/Closed
HV-1574	M-M6-J-0169[132]	N/A	Valve Position	Open/Closed
HV-1575	M-M6-J-0169[132]	N/A	Valve Position	Open/Closed
HV-1576	M-M6-J-0169[132]	N/A	Valve Position	Open/Closed
HV-1581	M-M6-J-0174[133]	N/A	Valve Position	Open/Closed

Table 10-4. Lab Collection Tank-A/B System Monitoring Instrumentation (cont.)

Equipment/ Instrument Number	P&ID	Scale Sheet	Monitored Variable	Indications
HV-1582	M-M6-J-0174[133]	N/A	Valve Position	Open/Closed
LIT-1583	M-M6-J-0174[133]	J-JZ-J-00072, *SWPF LI-1583 Lab Collection Tank-B Level*[137]	Lab Collection Tank-B (TK-237) Liquid Level	Gallons
LIT-1584	M-M6-J-0174[133]	J-JZ-J-00073, *SWPF LI-1584 Lab Collection Tank-B Level*[138]	Lab Collection Tank-B (TK-237) Liquid Level	Gallons
DIT-1584	M-M6-J-0174[133]	J-JZ-J-00806, *SWPF DI-1584 Lab Collection Tank-B Density*[139]	Lab Collection Tank-B (TK-237) Liquid Density	s.g.
HV-1585	M-M6-J-0174[133]	N/A	Valve Position	Open/Closed
HV-1580	M-M6-J-0174[133]	N/A	Valve Position	Open/Closed
FE-1588	M-M6-J-0174[133]	J-JZ-J-00807, *SWPF FI-1588 Lab Collection Tank Pump Flow*[140]	P-236 Flow Rate	gpm
P-236	M-M6-J-0174[133]	N/A	Pump Status	Run/Off
SC-1586	M-M6-J-0174[133]	J-JZ-J-01075, *SWPF SIC-1586 Lab Collection Tank Pump Speed*[141]	P-236 Pump Speed	0 – 100%
PIT-1587	M-M6-J-0174[133]	N/A	P-236 Discharge Pressure	Pounds per square inch gauge
HV-1589	M-M6-J-0174[133]	N/A	Valve Position	Open/Closed
HV-1590	M-M6-J-0174[133]	N/A	Valve Position	Open/Closed
HV-1595	M-M6-J-0174[133]	N/A	Valve Position	Open/Closed
HV-1596	M-M6-J-0174[133]	N/A	Valve Position	Open/Closed

10.3.5.2 Control Functions

There are no control loops in the Lab Collection Tank-A/B System.

Operation is initiated by the Operator via the DCS. Operations include sampling of the Lab Collection Tank-A (TK-236) and Lab Collection Tank-B (TK-237) and discharge of the tanks to the DSSHT (TK-207) or the Low Level Drain Tank Transfer Pump (P-604) discharge line, depending on sample analysis.

Interlocks are manually reset by the Operator.

10.4 Operations

10.4.1 Initial Configuration

Lab Collection Tank-A (TK-236) and Lab Collection Tank-B (TK-237) are empty. Pump P-236 is stopped.

10.4.2 System Startup

Equipment is started by the Operator via the DCS.

10.4.3 Normal Operations

The drainage effluents from the Analytical Laboratory scrubber blowdown, bench sinks, and radio hoods are gravity-drained into Lab Collection Tank-A (TK-236). Lab Collection Tank-B (TK-237) serves as a back-up tank to Lab Collection Tank-A (TK-236). Once Lab Collection Tank-A (TK-236) is filled, inlet valves to the Lab Collection Tank-B (TK-237) are opened by the DCS. The drainage effluents are directed into Lab Collection Tank-B (TK-237) while the Lab Collection Tank-A (TK-236) is being prepared to be emptied.

Lab Collection Tank Pump P-236 is started in recirculation mode to mix the contents of Lab Collection Tank-A (TK-236). After a short period of recirculation, a sample is taken from a manual sample point for analysis. The analysis determines the pump discharge route to be used, as described below, and the appropriate routing valve is opened by the Operator.

- To DSSHT (TK-207): This route is used if the tank contents are compatible for discharge to Tank 50.
- To P-604 Discharge Line: This route is used if the tank contents are to be sent to the ASDT (TK-601), Truck Bay, or Drum Off Station.
- The tank contents are discharged via P-236. The routing valve remains open until a low-low level in Lab Collection Tank-A (TK-236) is reached or a high-high level in the destination tank is detected. After the tank is empty, the Operator can wash down the tank via the flush header.
- The normal operations for Lab Collection Tank-B (TK-237) are similar to those described above for Lab Collection Tank-A (TK-236).

The process sequences for the Lab Collection system are included in Section 8.0 of X-PCD-J-00005[72].

10.4.4 Off-Normal and Recovery Operation

Table 10-5 lists conditions (failures/malfunctions/interlocks) of system components and recommended actions.

Table 10-5. Failures/Malfunctions

Condition	Detection	Immediate Action	Recovery
Lab Collection Tank-A (TK-236) High Level	Level Indicators (LI-1571 and LI-1572A)	Stop all inputs into Lab Collection Tank-A (TK-236).	Use P-236 to reduce level.
Lab Collection Tank-B (TK-237) High Level	Level Indicators (LI-1583 and LI-1584)	Stop all inputs into Lab Collection Tank-B (TK-237).	Use P-236 to reduce level.
P-236 Failure	Failure Alarm in DCS; Low Pressure Alarm Flow Alarm (PI-1587)	Isolate pump.	Perform repair on P-236.
Equipment or Valve Failure	Failure Alarm in DCS	Perform Aborting/Stopping Logic for Running Sequence	The alternate duty pump can be used until maintenance can be performed. For maintenance, flush out piping and pumps to allow access to investigate.
Low Plant Air Header Pressure	Pressure Indicator (PI-4435)	Perform Aborting/Stopping Logic for Running Sequence.	Operator to investigate cause of problem.
Low Process Building Exhaust Fan dP	Differential Pressure Indicator (PDI-4077)	Perform Aborting/Stopping Logic for Running Sequence.	Operator to investigate cause of problem.

10.4.5 System Shutdown

During normal shutdown, Lab Collection Tank-A (TK-236) or Lab Collection Tank-B (TK-237) is emptied to the DSSHT (TK-207), ASDT (TK-601), Truck Bay, or the Drum Off Station and the routing valve is then closed. Feeds are isolated. Pump P-236 is secured.

Several factors can lead to off-normal shutdown of the system. Misaligned valves, valve failures, and equipment failures would all lead to the system shutting down. In shutdown mode, the valves close, the pumps are shut down.

11.0 SDT (TK-208)

11.1 System Functions

The Solvent Drain Tank System collects, stores, and transfers drainage and waste effluents generated by the CSSX process. The main sources of drainage are:

- CSSX Pump Drain Header,
- Contactor Area Floor Drain,

- Contactor Drains via the Contactor Drain Header,
- Solvent Collection Overflows from CSSX process tanks,
- Solvent Recovery from the Strip Effluent Stilling Tank (TK-212) and Strip Effluent Coalescer (TK-203),
- Condensate from the PVVS,
- Flush from CSSX Vent Header,
- Lab Drain Tank (TK-235),
- Flush from Tank Heel Pump Down Filter (FLT-240),
- Spent caustic wash from Caustic Wash Tank (TK-204),
- Solvent Strip Feed Tank (TK-217) aqueous, and
- Decontaminated Salt Solution (DSS) Stilling Tank (TK-211) aqueous.

The drain lines from the CSSX Tank areas, contactor drain header, South ASP Labyrinth #2 and #3, and CSSX pipe chase drain will channel spills (waste and/or solvent) to the SDT (TK-208). The drain lines mitigate exposure to facility workers and reduce the probability of large solvent fires by directing waste and solvent leakage to the SDT (TK-208).

11.2 Operational Overview

SDT (TK-208)

The SDT (TK-208) receives drainage and flush from all 36 CSSX contactors, condensate from PVVS, CSSX Vent Header flush, tank solvent overflows, laboratory drainage, and caustic wash transfer. Aqueous effluents from the Solvent Strip Feed Tank (TK-217) and the DSS Stilling Tank (TK-211) are routed in the CSSX Pump Drain Header to the SDT (TK-208).The SDT (TK-208) is pumped by either P-208A or P-208B to the aqueous inlet line of the extraction stages. From there, the recovered solvent is separated from the aqueous phase during normal processing of the extraction feed. In case of a plant shutdown, the SDT (TK-208) can be transferred to SSFT (TK-109) if a high level is reached. This allows the SDT (TK-208) to continue to collect drainage. The Drum Off Station also receives liquid from the SDT (TK-208) if the SDT (TK-208) contents cannot be recycled back to the CSSX process.

CSSX Contactor Area

Each contactor includes a 1½-inch manual drain line that is routed to the Contactor Drain Header that gravity-drains into the SDT (TK-208). The CSSX Contactor Area contains the Contactor Area Sump.

Refer to P&IDs and PFDs listed in Table 11-1 and Table 11-2 for a list of major components.

Table 11-1. P&IDs and PFDs

Diagram Number	Diagram Title
M-M5-J-0001	*SWPF Simplified Process Flow Schematic (U)*[73]
M-M5-J-0006	*SWPF Salt Solution Feed Tank and Solvent Drain Tank PFD (U)*[142]
M-M6-J-0058	*SWPF Process Building Contactor Drain Header P&ID (U)*[143]
M-M6-J-0064 SH1	*SWPF Process Building CSSX Labyrinth Area Sumps P&ID (U)*[79]
M-M6-J-0120	*SWPF Process Building Solvent Drain Tank TK-208 P&ID (U)*[144]
M-M6-J-0121 SH1	*SWPF Process Building Solvent Drain Tank Pumps P-208A/B P&ID (U)*[145]
M-M6-J-0121 SH2	*SWPF Process Building Solvent Drain Tank Pumps P-208A/B Piping P&ID (U)*[146]

Table 11-2. Major Components

Component	Description
SDT (TK-208)	Stainless steel vessel that receives solvent and drainage from CSSX equipment and provides sufficient capacity for SWPF processing requirements. Capacity to Overflow: 4,300 gallons (M-CLC-J-00048[147]) Dimensions: 6 ft diameter x 20 ft horizontal T/T (M-CLC-J-00048[147]) Design Features: • Stainless steel vessel; • Tank includes provisions for mixing; • Vented to the Process Vessel Vent Header to maintain vacuum, with respect to the ASDT Cell; • Tank has one bubbler for level indication and one capacitance probe for level indication; and • Dipped overflow.
Solvent Drain Tank Pumps (P-208A/B)	To transfer SDT (TK-208) contents to the required location of HX-201 and eventually to EXT-201-P, SSFT (TK-109), ASDT (TK-601), or Drum Off Station. A pump recycle is provided for mixing of the SDT (TK-208) contents. Capacity: 50 gpm (see M-CLC-J-00113, *SWPF Solvent Drain Tank Transfer Pumps Sizing Calculation, P-208A/B*[148]) hp: 10
Solvent Drain Tank Loop Seal Ejector (EJT-208-1)	Capacity: 7.0 gpm Design Features: • Stainless steel
Solvent Drain Tank Loop Seal Ejector (EJT-208-2)	Capacity: 7.0 gpm Design Features: • Stainless steel
Solvent Drain Tank Loop Seal Ejector (EJT-208-3)	Capacity: 7.0 gpm Design Features: • Stainless steel

Table 11-2. Major Components (cont.)

11.2.1 Physical Location and Layout

SDT (TK-208)

The SDT (TK-208) is located in the ASDT Cell in order to maximize gravity-drainage flow paths from the CSSX.

CSSX Contactor Area Sump

The CSSX Contactor Area also includes a sump with a level element in order to detect leakage from any of the contactors.

Solvent Collection Overflows

Solvent collection overflows are installed on the following tanks for removal of any accumulated solvent and are routed to the SDT (TK-208):

- SSFT (TK-109),
- SEHT (TK-205), and
- Caustic Wash Tank (TK-204).

Solvent Recovery from the Strip Effluent Stilling Tank (TK-212) and Strip Effluent Coalescer (TK-203)

The Strip Effluent Stilling Tank (TK-212) and Strip Effluent Coalescer (TK-203) provide a mechanism to recover solvent from the strip effluent stream. The recovered solvent is routed to the SDT (TK-208) by a gravity drain. The drain line contains a loop seal with level monitoring.

11.2.1.1 System Monitoring

The Solvent Drain Tank System has instrumentation to monitor the status of the system and initiate corrective actions, if necessary. Remote indications are provided to the DCS.

See Table 11-3 for a listing of System Monitoring Instrumentation.

Table 11-3. Solvent Drain Tank System Monitoring Instrumentation

Equipment/ Instrument Number	P&ID	Scale Sheet	Monitored Variable	Indications
HV-2001	M-M6-J-0058[143]	N/A	Valve Position	Open/Closed

Table 11-3. Solvent Drain Tank System Monitoring Instrumentation **(cont.)**

Equipment/ Instrument Number	P&ID	Scale Sheet	Monitored Variable	Indications
LIT-2124	M-M6-J-0120[144]	J-JZ-J-00607, *SWPF LI-2124 West CSSX Tank Cell Sump and Drains Loop Seal to SDT*[149]	SMP-206 Loop Seal Liquid Level	Inches
PDIT-2092	M-M6-J-0120[144]	N/A	SDT (TK-208) Vapor Space DP	Inches Water Vacuum
HV-2095	M-M6-J-0121 SH1[145]	N/A	Valve Position	Open/Closed
LIT-2096	M-M6-J-0120[144]	J-JZ-J-0029, *SWPF LI-2096 SDT Level*[150]	SDT (TK-208) Liquid Level	Gallons
LE-2123	M-M6-J-0120[144]	N/A	SDT (TK-208) Liquid Level	Gallons
LIT-2125	M-M6-J-0120[144]	J-JZ-J-00608, *SWPF LI-2125 CSSX Drain Header Loop Seal to SDT*[151]	CSSX Drain Header Loop Seal Liquid Level	Inches
LIT-2126	M-M6-J-0120[144]	J-JZ-J-00609, *SWPF LI-2126 South ASP Labyrinth #2/#3 Drain Header Loop Seal to SDT*[152]	105/208 Sump Drain Header Loop Seal Liquid Level	Inches
HV-2119	M-M6-J-0121 SH1[145]	N/A	Valve Position	Open/Closed
HV-2116	M-M6-J-0121 SH1[145]	N/A	Valve Position	Open/Closed
HV-2115	M-M6-J-0121 SH1[145]	N/A	Valve Position	Open/Closed
HV-2094	M-M6-J-0121 SH1[145]	N/A	Valve Position	Open/Closed
HV-2099	M-M6-J-0121 SH1[145]	N/A	Valve Position	Open/Closed
P-208A	M-M6-J-0121 SH1[145]	N/A	Pump Status	Run/Off
SC-2097	M-M6-J-0121 SH1[145]	J-JZ-J-01113, *SWPF SIC-2097 Solvent Drain Tank Pump A Speed*[153]	P-208A Speed Control	0-100%
P-208B	M-M6-J-0121 SH1[145]	N/A	Pump Status	Run/Off
SC-2114	M-M6-J-0121 SH1[145]	J-JZ-J-01116, *SWPF SIC-2114 Solvent Drain Tank Pump B Speed*[154]	P-208B Speed Control	0-100%
FE-2066	M-M6-J-0121 SH2[146]	J-JZ-J-00615, *SWPF FIC-2066 Solvent Drain Tank Pump B Recirc Flow*[155]	Flow Rate	gpm
FV-2066	M-M6-J-0121 SH2[146]	J-JZ-J-00615[155]	Valve Position	0-100%

Table 11-3. Solvent Drain Tank System Monitoring Instrumentation **(cont.)**

Equipment/ Instrument Number	P&ID	Scale Sheet	Monitored Variable	Indications
FE-2117	M-M6-J-0121 SH2[146]	J-JZ-J-00613, *SWPF FIC-2117 Solvent Drain Tank Pump B Sample Flow*[156]	P-208A Flow Rate to Lab	gpm
FV-2117	M-M6-J-0121 SH2[146]	J-JZ-J-00613[156]	Valve Position	0-100%
FE-2046	M-M6-J-0121 SH2[146]	J-JZ-J-00612, *SWPF FIC-2046 Solvent Drain Tank Pump A Sample Flow*[157]	P-208A Flow Rate to Lab	gpm
FV-2046	M-M6-J-0121 SH2[146]	J-JZ-J-00612[157]	Valve Position	0-100%
FE-2055	M-M6-J-0121 SH2[146]	J-JZ-J-00611, *SWPF FIC-2055 Solvent Drain Tank Pump B Flow*[158]	P-208B Flow Rate/Quantity	gpm/Gallons
FV-2055	M-M6-J-0121 SH2[146]	J-JZ-J-00611[157]	Valve Position	0-100% Open
HV-2091	M-M6-J-0121 SH2[146]	N/A	Valve Position	Open/Closed
FE-2112	M-M6-J-0121 SH2[146]	J-JZ-J-00614, *SWPF FIC-2112 Solvent Drain Tank Pump A Recirc Flow*[159]	Flow Rate	gpm
FV-2112	M-M6-J-0121 SH2[146]	J-JZ-J-00614[159]	Valve Position	0-100% Open
FE-2090	M-M6-J-0121 SH2[146]	J-JZ-J-00610, *SWPF FIC-2090 Solvent Drain Tank Pump A Flow*[160]	P-208A Flow Rate/Quantity	gpm/Gallons
FV-2090	M-M6-J-0121 SH2[146]	J-JZ-J-00610[160]	Valve Position	1-100% Open
HV-2054	M-M6-J-0121 SH2[146]	N/A	Valve Position	Open/Closed
HV-2105	M-M6-J-0064 SH1[79]	N/A	Valve Position	Open/Closed
LIT-2244	M-M6-J-0064 SH1[79]	J-JZ-J-00549[96]	CSSX Pipe Chase Drain Loop Seal Liquid Level	Inches
VE-9275B/C	M-M6-J-0121 SH1[145]	N/A	P-208A Vibration	Cycles/second Inches/sec
VE-9273B/C	M-M6-J-0121 SH1[145]	N/A	P-208B Vibration	Cycles/second Inches/sec
PIT-2021	M-M6-J-0121 SH1[145]	J-JZ-J-01184, *SWPF PI-2021 Solvent Drain Tank A Disch Pressure*[161]	P-208A Discharge Pressure	psig
PIT-2022	M-M6-J-0121 SH1[145]	J-JZ-J-01185, *SWPF PI-2022 Solvent Drain Tank B Disch Pressure*[162]	P-208B Discharge Pressure	psig

Table 11-3. Solvent Drain Tank System Monitoring Instrumentation **(cont.)**

Equipment/ Instrument Number	P&ID	Scale Sheet	Monitored Variable	Indications
HV-2052	M-M6-J-0121 SH2[146]	N/A	Valve Position	Open/Closed
HV-2113	M-M6-J-0121 SH2[146]	N/A	Valve Position	Open/Closed
HV-2051	M-M6-J-0121 SH2[146]	N/A	Valve Position	Open/Closed
HV-2098	M-M6-J-0121 SH2[146]	N/A	Valve Position	Open/Closed

11.2.1.2 Control Functions

Operations initiated by the Operator, via the DCS, include solvent overflow from SSFT (TK-109), SEHT (TK-205), aqueous drain from Caustic Wash Tank (TK-204), and P-208A/B transfer.

Table 11-4 is a listing of the control loops for the Solvent Drain Tank System.

Table 11-4. Control Loops

Loop Number	P&ID	Scale Sheet	Controlled Variable	Set Point
FIC-2046	M-M6-J-0121 SH2[146]	J-JZ-J-00612[157]	Solvent Flow Rate P-208A to Lab	Operator-entered
FIC-2055	M-M6-J-0121 SH2[146]	J-JZ-J-00611[157]	P-208B Flow Rate	Operator-entered
FIC-2117	M-M6-J-0121 SH2[146]	J-JZ-J-00613[156]	Solvent Flow Rate P-208B to Lab	Operator-entered
FIC-2090	M-M6-J-0121 SH2[146]	J-JZ-J-00610[160]	P-208A Flow Rate	Operator-entered
SIC-2097	M-M6-J-0121 SH1[145]	J-JZ-J-01113[153]	P-208A Pump Speed/Pump flow rate	Operator-entered
SIC-2114	M-M6-J-0121 SH1[145]	J-JZ-J-01116[154]	P-208B Pump Speed/Pump flow rate	Operator-entered

11.3 Operations

11.3.1 Initial Configuration

The Solvent Drain Tank System primarily provides a means for collecting drainage from process equipment in CSSX for maintenance purposes.

There are three drain lines into the SDT (TK-208) that include a loop seal. These three loop seals have level indication and an associated ejector (EJT-208-1, EJT-208-2, and EJT-208-3). These ejectors are used to periodically empty the loop seal to ensure that any accumulated solvent is transferred into the SDT (TK-208).

The drain line from the contactor drain header includes a loop seal. This loop seal has an automatic valve (HV-2001). This valve is used to periodically empty the loop seal to ensure that any accumulated solvent is transferred into the SDT (TK-208).

The drain line from the CSSX pipe chase drain includes a loop seal. This loop seal has an automatic valve (HV-2105). This valve is used to periodically empty the loop seal to ensure that any accumulated solvent is transferred into the SDT (TK-208).

11.3.2 System Startup

Equipment is started by the Operator via the DCS. Mixing is available using control logic when the SDT (TK-208) is above a minimum level. Operating P-208A/B at low levels, or when whole tank mixing is not preferred, is performed by the Operator using Standard Operating Procedures (SOPs).

11.3.3 Normal Operations

SDT (TK-208)

The SDT (TK-208) and Pump (P-208A/B) operation is initiated by the Operator via the DCS. P-208 can operate in recirculation mode when the SDT (TK-208) is above a minimum level to provide mixing of the tank contents. An automated isolation valve is opened in the pump discharge to allow recirculation to the SDT (TK-208). A sample can be collected when Pump (P-208A/B) is in Mix mode. The sample is taken by routing a portion of the pump flow to Lab Hot Cell #2. The sample flow is controlled with a control valve and flow instrument.

Following Pump (P-208A/B) priming by the Operator, a discharge route may be selected for transfers from the SDT (TK-208) and include the following:

- To CSSX Extraction Contactor (EXT-201P) via the Salt Solution Feed Cooler (HX-201): This is the normal discharge route. This transfer is performed by the Operator using a SOP. A control valve is controlled by a downstream flow instrument. If a low return rate is required, the Operator can also adjust the speed of Pump P-208A/B. When returning the SDT (TK-208) effluent to CSSX, the Operator reduces the flow rate delivered from the Salt Solution Feed Pumps (P-109A/B) by the equivalent amount, in order to prevent hydraulic overloading of the CSSX contactors.
- To SSFT (TK-109): This route is available for prolonged plant shutdowns. The SDT (TK-208) continues to collect drainage, which is mainly condensate from the PVVS. This transfer is performed by the Operator using a SOP.
- To Drum Off Station: This route is used if the sample analysis shows the SDT (TK-208) contents are unsuitable for recycling to the CSSX process. This transfer is performed by the Operator using a SOP.

- To ASDT (TK-601): This route is provided as a contingency. In the event that the CSSX process is down and additional room is required for system drainage, a portion of the SDT (TK-208) contents may be moved to the ASDT (TK-601). This transfer is performed by the Operator using a SOP.

The process sequences for the SDT system are included in Section 4.0 in X-PCD-J-00005[72].

11.3.4 Off-Normal and Recovery Operation

The Solvent Drain Tank System includes the Solvent Drain Tank Pumps (P-208A/B) that are used to de-inventory the SDT (TK-208).

Table 11-5 lists conditions (failures/malfunctions) of system components and recommended actions.

Table 11-5. Recovery Actions

Condition	Detection	Immediate Action	Recovery
SDT (TK-208) High Level	Level Indicators (LI-2096 and LI-2123)	Stop all inputs into SDT (TK-208).	Use P-208A/B to reduce level.
SDT (TK-208) Level Indicator Failure	Failure Alarm in DCS	Stop inputs into SDT (TK-208).	Overflow to SMP-601 and pump-out by P-110 to SSRT (TK-104), ASDT (TK-601), or Drum Off Station.
SDT Pump (P-208A/B) Failure	Failure Alarm in DCS	Perform Stop All Logic for Running Sequence. Manually Switch to the alternate duty pump.	The alternate duty pump can be used until repairs are completed. The failed pump and associated piping will be flushed and drained prior to P&VG entry.
Failure of commanded equipment	DCS status indication	Perform Stopping Logic for Running Sequence.	Operator to investigate cause of problem.
Low Plant Air Header Pressure	Pressure Indicator (PI-4435)	Perform Stopping Logic for Running Sequence.	Operator to investigate cause of problem.
Low Process Building Exhaust Fan dP	DP Indicator (PDI-4077)	Perform Stopping Logic for Running Sequence.	Operator to investigate cause of problem.

11.3.5 System Shutdown

All routes into the SDT (TK-208) are isolated and P-208A/B is stopped during normal shutdown.

Several factors can lead to the off-normal shutdown of the system. Misaligned valves, valve failures, and equipment failures would all lead to the system shutting down. In shutdown mode, the valves close and the pumps are shutdown and the Operator is prompted to flush out the system so troubleshooting of the problems can begin.

12.0 REFERENCES.

[1] E-SD-J-00002, *SWPF Electrical System Description*, Revision 0. Parsons, Aiken, South Carolina.

[2] J-SD-J-00002, *SWPF Instrumentation and Controls System Description*, Revision 4. Parsons, Aiken, South Carolina.

[3] M-SD-J-00005, *SWPF Utilities System Description*, Revision 0. Parsons, Aiken, South Carolina.

[4] X-SD-J-00001, *SWPF Alpha Strike Process System Description*, Revision 1. Parsons, Aiken, South Carolina.

[5] X-SD-J-00002, *SWPF Caustic-Side Solvent Extraction System Description*, Revision 2. Parsons, Aiken, South Carolina.

[6] X-SD-J-00003, *SWPF Cold Chemicals Area System Description*, Revision 1. Parsons, Aiken, South Carolina.

[7] X-SD-J-00004, *SWPF Alpha Finishing Process System Description*, Revision 1. Parsons, Aiken, South Carolina.

[8] X-SD-J-00006, *SWPF Sampling System Description*, Revision 1. Parsons, Aiken, South Carolina.

[9] X-SD-J-00009, *SWPF Caustic-side Solvent Extraction with Next Generation Solvent (NGS) System Description.* Parsons, Aiken, South Carolina

[10] S-SAR-J-00002, *SWPFDocumented Safety Analysis*, Revision 0. Parsons, Aiken, South Carolina.

[11] P-DB-J-00002, *SWPF Design Criteria Database*, Revision 2. Parsons, Aiken, South Carolina.

[12] *Salt Waste Processing Facility Procedure Manual.* Aiken, South Carolina

[13] P-CDM-J-00001, *SWPF Configuration Management Plan*, Parsons, Aiken, South Carolina.

[14] P-DB-J-00003, *SWPF Process Basis of Design*, Revision 5. Parsons, Aiken, South Carolina.

[15] M-CLC-J-00083, *SWPF Process Cell Sump Sizing and Alpha Finishing Facility Sump Sizing*, Revision 2. Parsons, Aiken, South Carolina.

[16] M-CLC-J-00096, *SWPF Process Drain Lines Sizing Calculation*, Revision 1 Parsons, Aiken, South Carolina.

[17] M-M5-J-0018, *SWPF Lab Drain Tank, Alpha Sorption Drain Tank and Spent Acid Storage Tank PFD (U)*. Parsons, Aiken, South Carolina.

[18] M-M6-J-0010, *SWPF Process Building Alpha Sorption Filter FLT-102A P&ID (U)*. Parsons, Aiken, South Carolina.

[19] M-M6-J-0011, *SWPF Process Building Alpha Sorption Filter FLT-102B P&ID (U)*. Parsons, Aiken, South Carolina.

[20] M-M6-J-0012, *SWPF Process Building Alpha Sorption Filter FLT-102C P&ID (U)*. Parsons, Aiken, South Carolina.

[21] M-M6-J-0016, *SWPF Process Building Washing Filter FLT-104 P&ID (U)*. Parsons, Aiken, South Carolina.

[22] M-M6-J-0020 SH1, SWPF Process Building ASP Pump and Valve Gallery Labyrinth Sumps P&ID (U). Parsons, Aiken, South Carolina.

[23] M-M6-J-0020 SH2, SWPF Process Building ASP Pump and Valve Gallery Labyrinth Sumps P&ID (U). Parsons, Aiken, South Carolina.

[24] M-M6-J-0020 SH3, *SWPF Process Building ASP Sump Transfer Pump P-110 P&ID (U)*. Parsons, Aiken, South Carolina.

[25] M-M6-J-0051 SH4, *SWPF Alpha Finishing Facility Filter Feeds/Solids Transfer Pump P-222-1C and Filter Recirculation Pump P-222-2C P&ID (U)*. Parsons, Aiken, South Carolina.

[26] M-M6-J-0061, *SWPF Process Building Alpha Sorption Drain Tank TK-601 P&ID (U)*. Parsons, Aiken, South Carolina.

[27] M-M6-J-0062 SH1, *SWPF Process Building Alpha Sorption Drain Tank Transfer Pumps P-601A/B P&ID (U)*. Parsons, Aiken, South Carolina.

[28] M-M6-J-0062 SH2, *SWPF Process Building Alpha Sorption Drain Tank Transfer Pumps P-601A/B Piping P&ID (U)*. Parsons, Aiken, South Carolina.

[29] M-M6-J-0115, *SWPF Process Building Spent Acid Storage Tank TK-127 P&ID (U)*. Parsons, Aiken, South Carolina.

[30] M-M6-J-0132 SH1, *SWPF Process Building Process Cell Wet Sumps SMP-101, SMP-102, and SMP-601 P&ID (U)*. Parsons, Aiken, South Carolina.

[31] M-M6-J-0132 SH2, *SWPF Process Building Process Cell Wet Sumps SMP-104, SMP-109, and SMP-205 P&ID (U)*. Parsons, Aiken, South Carolina.

[32] M-M6-J-0147, *SWPF Alpha Finishing Facility Low Level Drain Tank TK-604 P&ID (U)*. Parsons, Aiken, South Carolina.

[33] M-M6-J-0153, *SWPF Process Building Sample Pumps SP-104 and SP-105 P&ID (U)*. Parsons, Aiken, South Carolina.

[34] M-M6-J-0166, *SWPF Process Building ASP Pump Drain Header P&ID (U)*. Parsons, Aiken, South Carolina.

[35] M-M6-J-0187, *SWPF Process Building Pulse Mixer Vent System P&ID (U)*. Parsons, Aiken, South Carolina.

[36] M-CLC-J-00056, *SWPF Alpha Sorption Drain tank Sizing Calculation, TK-601,* Revision 1. Parsons, South Carolina.

[37] J-JZ-J-00079, *SWPF LI-1105 AST-A Sump Level*, Revision 3. Parsons, Aiken, South Carolina.

[38] J-JZ-J-00080, *SWPF LI-1107 FFT-A Sump Level*, Revision 3. Parsons, Aiken, South Carolina.

[39] J-JZ-J-00083, *SWPF LI-1109 ASDT Sump Level*, Revision 3. Parsons, Aiken, South Carolina.

[40] J-JZ-J-00186, *SWPF LI-1180 North ASP Labyrinth #3 Sump Level*, Revision 1. Parsons, Aiken, South Carolina.

[41] J-JZ-J-00187, *SWPF LI-1181 north ASP Labyrinth #4 Sump Level*, Revision 1. Parsons, Aiken, South Carolina.

[42] J-JZ-J-00190, *SWPF LI-1182 North ASP Labyrinth #5 Sump Level*, Revision 1. Parsons, Aiken, South Carolina.

[43] J-JZ-J-00191, *SWPF LI-1299 North ASP Labyrinth #6 Sump Level*, Revision 1. Parsons, Aiken, South Carolina.

[44] J-JZ-J-00081, *SWPF LI-1315 SSRT/WWHT Sump Level*, Revision 3. Parsons, Aiken, South Carolina.

[45] J-JZ-J-00082, *SWPF LI-1391 SSFT Sump Level*, Revision 4. Parsons, Aiken, South Carolina.

[46] J-JZ-J-01080, *SWPF LI-1499 SEHT Sump Level*, Revision 4. Parsons, Aiken, South Carolina.

[47] J-JZ-J-00188, *SWPF LI-1729 North ASP Labyrinth #2 Sump Level*, Revision 1. Parsons, Aiken, South Carolina.

[48] J-JZ-J-00189, *SWPF LI-1730 North ASP Labyrinth #1 Sump Level*, Revision 1. Parsons, Aiken, South Carolina.

[49] J-JZ-J-00193, *SWPF LI-1740 South ASP Labyrinth #1 Sump Loop Seal to ASDT*, Revision 0. Parsons, Aiken, South Carolina.

[50] J-JZ-J-00194, *SWPF LI-1741 North ASP Labyrinth #5 Sump Loop Seal to ASDT*, Revision 0. Parsons, Aiken, South Carolina.

[51] J-JZ-J-01200, SWPF *PI-7201 ASDT Xfer Pump A Disch Pressure*, Revision 0. Parsons, Aiken, South Carolina.

[52] J-JZ-J-01201, *SWPF PI-7203 ASDT Xfer Pump B Disch Pressure*, Revision 0. Parsons, Aiken, South Carolina.

[53] J-JZ-J-00192, *SWPF LI-7223 South ASP Labyrinth #1 Sump Level*, Revision 1. Parsons, Aiken, South Carolina.

[54] J-JZ-J-00536, *SWPF FI-7224 ASDT Xfer Pump A Flow*, Revision 1. Parsons, Aiken, South Carolina.

[55] J-JZ-J-01223, *SWPF SIC-7227 ASDT Xfer Pump A Speed*, Revision 0. Parsons, Aiken, South Carolina.

[56] J-JZ-J-01224, *SWPF SIC-7228 ASDT Xfer Pump B Speed*, Revision 0. Parsons, Aiken, South Carolina.

[57] J-JZ-J-00532, *SWPF DI-7235 ASDT Density*, Revision 1. Parsons, Aiken, South Carolina.

[58] J-JZ-J-0039, *SWPF LI-7235 ASDT Level*, Revision 2. Parsons, Aiken, South Carolina.

[59] J-JZ-J-00535, *SWPF TI-7236 ASDT Temp*, Revision 0. Parsons, Aiken, South Carolina.

[60] J-JZ-J-00534, *SWPF PDI-7237 ASDT Vacuum*, Revision 1. Parsons, Aiken, South Carolina.

[61] J-JZ-J-00533, *SWPF DI-7238 ASDT Density*, Revision 1. Parsons, Aiken, South Carolina.

[62] J-JZ-J-0040, *SWPF LI-7238 ASDT Level*, Revision 3. Parsons, Aiken, South Carolina.

[63] J-JZ-J-00597, *SWPF PDI-7260 SAST Vacuum*, Revision 1. Parsons, Aiken, South Carolina.

[64] J-JZ-J-0020, *SWPF LI-7261 SAST Level*, Revision 1. Parsons, Aiken, South Carolina.

[65] J-JZ-J-00595, *SWPF DI-7261 SAST Density*, Revision 1. Parsons, Aiken, South Carolina.

[66] J-JZ-J-00598, *SWPF TI-7263 SAST Temp*, Revision 0. Parsons, Aiken, South Carolina.

[67] J-JZ-J-0021, *SWPF LI-7265 SAST Level*, Revision 2. Parsons, Aiken, South Carolina.

[68] J-JZ-J-00596, *SWPF DI-7265 SAST Density*, Revision 1. Parsons, Aiken, South Carolina.

[69] J-JZ-J-00537, *SWPF FI-7277 ASDT Xfer Pump B Flow*, Revision 1. Parsons, Aiken, South Carolina.

[70] J-JZ-J-00538, *SWPF FIC-7283 ASDT Sample Flow*, Revision 1. Parsons, Aiken, South Carolina.

[71] J-JZ-J-00539, *SWPF FIC-7285 SAST Sample Flow*, Revision 1. Parsons, Aiken, South Carolina.

[72] X-PCD-J-00005, *SWPF Automation Functional Control Sequence for: Drains*, Revision 2. Parsons, Aiken, South Carolina.

[73] M-M5-J-0001, *SWPF Simplified Process Flow Schematic (U)*. Parsons, Aiken, South Carolina.

[74] M-M6-J-0030, *SWPF Process Building Salt Solution Feed Tank TK-109 P&ID (U)*. Parsons, Aiken, South Carolina.

[75] M-M6-J-0032, *SWPF Process Building Strip Effluent Hold Tank TK-205 P&ID (U)*. Parsons, Aiken, South Carolina.

[76] M-M6-J-0043 SH2, *SWPF Process Building Caustic Wash Tank TK-204 P&ID (U)*. Parsons, Aiken, South Carolina.

[77] M-M6-J-0047 SH2, *SWPF Process Building Ba-137 Decay Tank TK-206 P&ID (U)*. Parsons, Aiken, South Carolina.

[78] M-M6-J-0060 SH1, *SWPF Process Building Solvent Strip Feed Tank TK-217 P&ID (U).* Parsons, Aiken, South Carolina.

[79] M-M6-J-0064 SH1, *SWPF Process Building CSSX Labyrinth Area Sumps P&ID (U).* Parsons, Aiken, South Carolina.

[80] M-M6-J-0064 SH2, *SWPF Process Building CSSX Pump Drain Header P&ID (U).* Parsons, Aiken, South Carolina.

[81] M-M6-J-0122 SH2, *SWPF Process Building Strip Effluent Pump Tank TK-215 P&ID (U)*. Parsons, Aiken, South Carolina.

[82] M-M6-J-0126, *SWPF Process Building West CSSX Tank Cell Sump P&ID (U)*. Parsons, Aiken, South Carolina.

[83] M-M6-J-0138, *SWPF Process Building South ASP Area 105 and 208 Sumps P&ID (U),* Revision 5. Parsons, Aiken, South Carolina.

[84] M-M6-J-0150, *SWPF Process Building East CSSX Tank Cell Sump P&ID (U)*, Revision 10. Parsons, Aiken, South Carolina.

[85] J-JZ-J-00542, *SWPF LI-1464 Labyrinth #1 Sump Level*, Revision 1. Parsons, Aiken, South Carolina.

[86] J-JZ-J-00894, *SWPF LI-1676 South ASP Labyrinth #2 Sump Level*, Revision 1. Parsons, Aiken, South Carolina.

[87] J-JZ-J-00895, *SWPF LI-1680 South ASP Labyrinth #3 Sump Level*, Revision 1. Parsons, Aiken, South Carolina.

[88] J-JZ-J-01085, *SWPF LI-2011 East CSSX Tank Cell Sump Level*, Revision 2. Parsons, Aiken, South Carolina.

[89] J-JZ-J-00634, *SWPF LI-2012 Contactor Floor Drain Loop Seal Level*, Revision 1. Parsons, Aiken, South Carolina.

[90] J-JZ-J-00543, *SWPF LI-2122 CSSX Labyrinth #2 Sump Level*, Revision 1. Parsons, Aiken, South Carolina.

[91] J-JZ-J-00544, *SWPF LI-2155 CSSX Labyrinth #6 Sump Level*, Revision 1. Parsons, Aiken, South Carolina.

[92] J-JZ-J-00545, *SWPF LI-2190 Sample Pump and Valve Gallery Labyrinth Sump Level*, Revision 2. Parsons, Aiken, South Carolina.

[93] J-JZ-J-00546, *SWPF LI-2218 CSSX Labyrinth #5 Sump Level*, Revision 1. Parsons, Aiken, South Carolina.

[94] J-JZ-J-00547, *SWPF LI-2240 CSSX Labyrinth #3 Sump Level*, Revision 1. Parsons, Aiken, South Carolina.

[95] J-JZ-J-00548, *SWPF LI-2241 CSSX Labyrinth #4 Sump Level*, Revision 1. Parsons, Aiken, South Carolina.

[96] J-JZ-J-00549, *SWPF LI-2244 CSSX Pipe Chase Drain Loop Seal Level*, Revision 0. Parsons, Aiken, South Carolina.

[97] M-CLC-J-00088, *Spent Acid Storage Tank Sizing Calculation*, Revision 1. Parsons, Aiken, South Carolina.

[98] M-CLC-J-0143, *SWPF Mass Balance Model Calculations as a Result of Nitric Acid Replacing Oxalic Acid*, Revision 1. Parsons, Aiken, South Carolina.

[99] M-M6-J-0063, *SWPF Alpha Finishing Facility Alpha Finishing Drain Tank TK-228 P&ID (U)*. Parsons, Aiken, South Carolina.

[100] M-M6-J-0127, *SWPF Alpha Finishing Facility Diked Area Sumps P&ID (U)*. Parsons, Aiken, South Carolina.

[101] M-M6-J-0052, *SWPF Alpha Finishing Facility Alpha Sorption Filter FLT-222A P&ID (U)*. Parsons, Aiken, South Carolina.

[102] M-M6-J-0053, *SWPF Alpha Finishing Facility Alpha Sorption Filter FLT-222B P&ID (U)*. Parsons, Aiken, South Carolina.

[103] M-M6-J-0054, *SWPF Alpha Finishing Facility Alpha Sorption Filter FLT-222C P&ID (U)*. Parsons, Aiken, South Carolina.

[104] M-CLC-J-00087, *SWPF Alpha Finishing Drain Tank Sizing Calculation, TK-228*, Revision 1. Parsons, Aiken, South Carolina.

[105] J-JZ-J-00630, *SWPF LI-2205 DSSHT/FFT-B Diked Area Sump (East) Level*, Revision 1. Parsons, Aiken, South Carolina.

[106] J-JZ-J-00631, *SWPF LI-2247 AFDT Area Sump Level*, Revision 0. Parsons, Aiken, South Carolina.

[107] J-JZ-J-01202, *SWPF PI-7210 AFDT Xfer Pump Disch Pressure*, Revision 0. Parsons, Aiken, South Carolina.

[108] J-JZ-J-00069, *SWPF LI-7321 AFDT Level*, Revision 1. Parsons, Aiken, South Carolina.

[109] J-JZ-J-00068, *SWPF LI-7212 AFDT Level*, Revision 1. Parsons, Aiken, South Carolina.

[110] J-JZ-J-00540, *SWPF DI-7212 AFDT Density*, Revision 1. Parsons, Aiken, South Carolina.

[111] J-JZ-J-00541, *SWPF FIC-7230 AFDT Discharge Flow*, Revision 1. Parsons, Aiken, South Carolina.

[112] J-JZ-J-00632, *SWPF LI-7011 IST/AST-B Sump Level*, Revision 1. Parsons, Aiken, South Carolina.

[113] J-JZ-J-00633, *SWPF LI-7034 DSSHT/FFT-B Diked Area Sump (West) Level*, Revision 1. Parsons, Aiken, South Carolina.

[114] J-JZ-J-01225, *SWPF SIC-7232 AFDT Xfer Pump Speed*, Revision 1. Parsons, Aiken, South Carolina.

[116] M-M6-J-0109, *SWPF Process Building Lab Hot Cell #2 TK-202 and TK-208 Samplers P&ID (U)*. Parsons, Aiken, South Carolina.

[117] M-M6-J-0113, *SWPF Process Building Lab Drain Tank TK-235 P&ID (U)*. Parsons, Aiken, South Carolina.

[118] M-M6-J-0152, *SWPF Process Building Sample Pumps SP-102, SP-103 and SP-235 P&ID (U)*. Parsons, Aiken, South Carolina.

[119] J-JZ-J-00520, *SWPF LI-1254 Lab Hot Cell Drain Loop Seal to LDT Level*. Parsons, Aiken, South Carolina.

[120] J-JZ-J-00591, *SWPF LI-7124 Sol Adjust HX Area Drain Loop Seal Level*. Parsons, Aiken, South Carolina.

[121] J-JZ-J-00053, *SWPF LI-7252 Lab Drain Tank Level*, Revision 2. Parsons, Aiken, South Carolina.

[122] J-JZ-J-01174, *SWPF LI-7256 Lab Glove Box Drain Loop Seal Level*. Parsons, Aiken, South Carolina.

[123] J-JZ-J-01108, *SWPF SIC-1835 Lab Drain Tank Sample Pump Speed*. Parsons, Aiken, South Carolina.

[124] J-JZ-J-00640, *SWPF FIC-1838 LDT Sample Pump Flow*. Parsons, Aiken, South Carolina.

[125] J-JZ-J-01180, *SWPF PI-2014 Lab Drain Tank Sample Pump Disch Pressure*. Parsons, Aiken, South Carolina.

[126] J-JZ-J-01178, *SWPF PI-2008 LLDT Pump Disch Pressure*. Parsons, Aiken, South Carolina.

[127] J-JZ-J-00078, *SWPF LI-7403 Low Level Drain Tank Level*. Parsons, Aiken, South Carolina.

[128] J-JZ-J-01082, *SWPF LI-7405 Low Level Drain Tank Loop Seal Level*. Parsons, Aiken, South Carolina.

[129] J-JZ-J-01226, *SWPF SIC-7406 Low Level Drain Tank Transfer Pump Speed*. Parsons, Aiken, South Carolina.

[130] M-M6-J-0156, *SWPF Process Building Drum Off/Decon Area Sump P&ID (U)*. Parsons, Aiken, South Carolina.

[131] J-JZ-J-00649, *SWPF LI-7304 Drum Off/Decon Area Sump Level*. Parsons, Aiken, South Carolina.

[132] M-M6-J-0169, *SWPF Alpha Finishing Facility Lab Collection Tank A TK-236 P&ID (U)*. Parsons, Aiken, South Carolina.

[133] M-M6-J-0174, *SWPF Alpha Finishing Facility Lab Collection Tank B TK-237 and P-236 P&ID (U)*. Parsons, Aiken, South Carolina.

[134] J-JZ-J-00070, *SWPF LI-1571 Lab Collection Tank-A Level*. Parsons, Aiken, South Carolina.

[135] J-JZ-J-00071, *SWPF LI-1572A Lab Collection Tank-A Level*. Parsons, Aiken, South Carolina.

[136] J-JZ-J-00799, *SWPF DI-1572B Lab Collection Tank-A Density*. Parsons, Aiken, South Carolina.

[137] J-JZ-J-00072, *SWPF LI-1583 Lab Collection Tank-B Level*. Parsons, Aiken, South Carolina.

[138] J-JZ-J-00073, *SWPF LI-1584 Lab Collection Tank-B Level*. Parsons, Aiken, South Carolina.

[139] J-JZ-J-00806, *SWPF DI-1584 Lab Collection Tank-B Density*. Parsons, Aiken, South Carolina.

[140] J-JZ-J-00807, *SWPF FI-1588 Lab Collection Tank Pump Flow*. Parsons, Aiken, South Carolina.

[141] J-JZ-J-01075, *SWPF SIC-1586 Lab Collection Tank Pump Speed*. Parsons, Aiken, South Carolina.

[142] M-M5-J-0006, *SWPF Salt Solution Feed Tank and Solvent Drain Tank PFD (U)*. Parsons, Aiken, South Carolina.

[143] M-M6-J-0058, *SWPF Process Building Contactor Drain Header P&ID (U)*. Parsons, Aiken, South Carolina.

[144] M-M6-J-0120, *SWPF Process Building Solvent Drain Tank TK-208 P&ID (U)*. Parsons, Aiken, South Carolina.

[145] M-M6-J-0121 SH1, *SWPF Process Building Solvent Drain Tank Pumps P-208A/B P&ID (U)*. Parsons, Aiken, South Carolina.

[146] M-M6-J-0121 SH2, *SWPF Process Building Solvent Drain Tank Pumps P-208A/B Piping P&ID (U)*. Parsons, Aiken, South Carolina.

[148] M-CLC-J-00113, *SWPF Solvent Drain Tank Transfer Pumps Sizing Calculation, P-208A/B*, Revision 1. Parsons, Aiken, South Carolina.

[149] J-JZ-J-00607, *SWPF LI-2124 West CSSX Tank Cell Sump and Drains Loop Seal to SDT*,. Parsons, Aiken, South Carolina.

[150] J-JZ-J-0029, *SWPF LI-2096 SDT Level*,. Parsons, Aiken, South Carolina.

[151] J-JZ-J-00608, *SWPF LI-2125 CSSX Drain Header Loop Seal to SDT*. Parsons, Aiken, South Carolina.

[152] J-JZ-J-00609, *SWPF LI-2126 South ASP Labyrinth #2/#3 Drain Header Loop Seal to SDT*. Parsons, Aiken, South Carolina.

[153] J-JZ-J-01113, *SWPF SIC-2097 Solvent Drain Tank Pump A Speed*. Parsons, Aiken, South Carolina.

[154] J-JZ-J-01116, *SWPF SIC-2114 Solvent Drain Tank Pump B Speed*. Parsons, Aiken, South Carolina.

[155] J-JZ-J-00615, *SWPF FIC-2066 Solvent Drain Tank Pump B Recirc Flow*. Parsons, Aiken, South Carolina.

[156] J-JZ-J-00613, *SWPF FIC-2117 Solvent Drain Tank Pump B Sample Flow*. Parsons, Aiken, South Carolina.

[157] J-JZ-J-00612, *SWPF FIC-2046 Solvent Drain Tank Pump A Sample Flow*. Parsons, Aiken, South Carolina.

[158] J-JZ-J-00611, *SWPF FIC-2055 Solvent Drain Tank Pump B Flow*. Parsons, Aiken, South Carolina.

[159] J-JZ-J-00614, *SWPF FIC-2112 Solvent Drain Tank Pump A Recirc Flow*. Parsons, Aiken, South Carolina.

[160] J-JZ-J-00610, *SWPF FIC-2090 Solvent Drain Tank Pump A Flow*. Parsons, Aiken, South Carolina.

[161] J-JZ-J-01184, *SWPF PI-2021 Solvent Drain Tank A Disch Pressure*. Parsons, Aiken, South Carolina.

[162] J-JZ-J-01185, *SWPF PI-2022 Solvent Drain Tank B Disch Pressure*. Parsons, Aiken, South Carolina.