M-SD-J-00004
Revision: 2
Date: August 13, 2019

SALT WASTE PROCESSING FACILITY PROJECT

HEATING, VENTILATING, AND AIR CONDITIONING

SYSTEM DESCRIPTION

Prepared, reviewed, and accepted by:

MATTHEW THOMAS WOOTEN ORC1890002040.ID Digitally signed by MATTHEW THOMAS WOOTEN ORC1890002040.ID Date: 2019.08.13 13:55:18 -04'00'

Matt Wooten **Date**
SWPF Cognizant System Engineer

Bill Brasel 8/15/19

Bill Brasel **Date**
SWPF Engineering Integration Manager

Bill Brasel for 8/15/19

Dr. Thomas D. Burns, Jr., P.E. **Date**
SWPF Director of Engineering

SUMMARY OF CHANGES

Revision No.	Date	Description of Change
0	01/17/2011	Per DMR-1566, initial issuance.
1	06/29/2015	Revised per DCN-1464. This is a complete rewrite.
2	08/13/2019	Revise per DCN-1860, DCN-1964, DCN-1968, DCN-1979, DCN-2101, DCN-2173 and DCN-7015.

TABLE OF CONTENTS

1.0 SCOPE 1

2.0 GENERAL OVERVIEW 3

2.1 Process Building Ventilation System 4
2.2 Alpha Finishing Facility HVAC 4
2.3 Control Room HVAC 4
2.4 Process Vessel Ventilation System 5
2.5 Pulse Mixer Ventilation System 5
2.6 Compressor Building and Cold Chemicals Area 5
2.7 Process Building Heat Recovery System 5
2.8 Analytical Laboratory HVAC Zone 5
2.9 NGS Building 6

3.0 PROCESS BUILDING VENTILATION SYSTEM 15

3.1 System Functions 15
3.2 Operational Overview 16
3.3 Configuration Information 17
3.3.1 Description of System 17
3.3.2 Major Components 21
3.3.3 Stream Data 23
3.3.4 Physical Location and Layout 23
3.3.5 System Control Features and Interlocks 23
3.4 Operations 29
3.4.1 Initial Configuration 29
3.4.2 System Startup 29
3.4.3 Normal Operations 30
3.4.4 Off-Normal and Recovery Operation 30
3.4.5 System Shutdown 30

4.0 ALPHA FINISHING FACILITY HVAC SYSTEM 30

4.1 System Functions 31
4.2 Operational Overview 31
4.3 Configuration Information 32
4.3.1 Description of System 32
4.3.2 Major Components 34
4.3.3 Stream Data 34
4.3.4 Physical Location and Layout 34
4.3.5 System Control Features and Interlocks 34
4.4 Operations 36
4.4.1 Initial Configuration 36

TABLE OF CONTENTS (cont.)

4.4.2 System Startup 36
4.4.3 Normal Operations 36
4.4.4 Off-Normal and Recovery Operations 37
4.4.5 System Shutdown 37

5.0 CONTROL ROOM HVAC 37

5.1 System Functions 37
5.2 Operational Overview 37
5.3 Configuration Information 38
5.3.1 Description of System 38
5.3.2 Major Components 39
5.3.3 Stream Data 39
5.3.4 Physical Location and Layout 40
5.3.5 System Control Features and Interlocks 40
5.4 Operations 41
5.4.1 Initial Configuration 41
5.4.2 System Startup 41
5.4.3 Normal Operations 41
5.4.4 Off-Normal and Recovery Operation 42
5.4.5 System Shutdown 42

6.0 PROCESS VESSEL VENTILATION SYSTEM 42

6.1 System Functions 42
6.2 Operational Overview 43
6.3 Configuration Information 43
6.3.1 Description of System 43
6.3.2 Major Components 46
6.3.3 Stream Data 47
6.3.4 Physical Location and Layout 47
6.3.5 System Control Features and Interlocks 47
6.4 Operations 49
6.4.1 Initial Configuration 49
6.4.2 System Startup 49
6.4.3 Normal Operations 49
6.4.4 Off-Normal and Recovery Operation 50
6.4.5 System Shutdown 50

7.0 PULSE MIXER VENTILATION SYSTEM 50

7.1 System Functions 50
7.2 Operational Overview 51

TABLE OF CONTENTS (cont.)

7.3 Configuration Information 51
7.3.1 Description of System 51
7.3.2 Major Components 54
7.3.3 Stream Data 54
7.3.4 Physical Location and Layout 54
7.3.5 System Control Features and Interlocks 55
7.4 Operations 57
7.4.1 Initial Configuration 57
7.4.2 System Startup 57
7.4.3 Normal Operations 57
7.4.4 Off-Normal and Recovery Operation 58
7.4.5 System Shutdown 58

8.0 CCA, COMPRESSOR BUILDING, AND SSP ROOM HVAC SYSTEMS 58

8.1 System Functions 58
8.2 Operational Overview 59
8.3 Configuration Information 59
8.3.1 Description of System 59
8.3.2 Major Components 61
8.3.3 Stream Data 62
8.3.4 Physical Location and Layout 62
8.3.5 System Control Features and Interlocks 63
8.4 Operations 64
8.4.1 Initial Configuration 64
8.4.2 System Startup 64
8.4.3 Normal Operations 65
8.4.4 Off-Normal and Recovery Operation 65
8.4.5 System Shutdown 65

9.0 PROCESS BUILDING HEAT RECOVERY SYSTEM 65

9.1 System Functions 66
9.2 Operational Overview 66
9.3 Configuration Information 66
9.3.1 Description of System 66
9.3.2 Major Components 68
9.3.3 Stream Data 68
9.3.4 Physical Location and Layout 68
9.3.5 System Control Features and Interlocks 69
9.4 Operations 70
9.4.1 Initial Configuration 70
9.4.2 System Startup 70

TABLE OF CONTENTS (cont.)

9.4.3 Normal Operations 70
9.4.4 Off-Normal and Recovery Operation 70
9.4.5 System Shutdown 71

10.0 ANALYTICAL LABORATORY HVAC SYSTEM 71

10.1 System Functions 71
10.2 Operational Overview 72
10.3 Configuration Information 72
10.3.1 Description of System 72
10.3.2 Major Components 75
10.3.3 Stream Data 76
10.3.4 Physical Location and Layout 76
10.3.5 System Control Features and Interlocks 77
10.4 Operations 79
10.4.1 Initial Configuration 79
10.4.2 System Startup 80
10.4.3 Normal Operations 80
10.4.4 Off-Normal and Recovery Operation 80
10.4.5 System Shutdown 80

11.0 NGS BUILDING HVAC SYSTEM 80

11.1 System Functions 80
11.2 Operation Overview 81
11.3 Configuration Information 81
11.3.1 Description System 81
11.3.2 Major Components 81
11.3.3 Stream Data 82
11.3.4 Physical Location and Layout 82
11.3.5 System Control Features and Interlocks 82
11.4 Operations 82
11.4.1 Initial Configuration 82
11.4.2 System Startup 82
11.4.3 Normal Operations 82
11.4.4 Off-Normal and Recovery Operation 83
11.4.5 System Shutdown 83

12.0 REFERENCES 84

List of Figures

Figure 2-1. Schematic of Process Building Ventilation System 7

TABLE OF CONTENTS (cont.)

Figure 2-2. SWPF Process Building HVAC Composite Flow Diagram.....8
Figure 2-3. SWPF Alpha Finishing Facility Air Flow Control Diagram.....9
Figure 2-4. SWPF Alpha Finishing Facility Process Vessel Ventilation System Diagram ...10
Figure 2-5. Control Room HVAC Arrangement 11
Figure 2-6. Process Vessel Ventilation System Configuration.....12
Figure 2-7. Pulse Mixer Ventilation System Configuration.....13
Figure 2-8. Heat Recovery Arrangement.....14

TABLE OF CONTENTS (cont.)

List of Tables

Table 3-1. Process Building Non-Contaminated Air Areas Exhausted by Roof Fans 20
Table 3-2. Air Flow and Control Diagrams.....20
Table 3-3. PBVS Major Components.....22
Table 3-4. Process Building Heating Coils.....23
Table 3-5. PBVS Instrumentation 24
Table 4-1. AFF HVAC Air Flow and Control Diagrams, Piping and Instrumentation Diagrams.....33
Table 4-2. AFF HVAC Major Components 34
Table 4-3. AFF HVAC Instrumentation.....35
Table 5-1. CR HVAC System Drawings 39
Table 5-2. CR HVAC Major Components 39
Table 5-3. CR HVAC Instrumentation.....40
Table 6-1. Process Vessels and Contactors Served by PVVS.....44
Table 6-2. PVVS Diagrams 46
Table 6-3. PVVS Major Components.....46
Table 6-4. PVVS Instrumentation 47
Table 7-1. Pulse Mixer Ventilation System Vented Tanks.....52
Table 7-2. PMVS Air Flow Diagrams and Piping and Instrumentation Diagrams.....53
Table 7-3. PMVS Major Components.....54
Table 7-4. PMVS Instrumentation 55
Table 8-1. CCA HVAC System Air Flow and Control Diagram.....60
Table 8-2. SSP Room HVAC Air Flow and Control Diagram 61
Table 8-3. CCA HVAC System Components 61
Table 8-4. Compressor Building HVAC Major Components.....62
Table 8-5. SSP Room HVAC Major Components 62
Table 8-6. CCA HVAC Instrumentation 63
Table 9-1. Process Building Heat Recovery System Air Flow Diagrams.....67
Table 9-2. Heat Recovery System Major Components.....68
Table 9-3. Heat Recovery System Instrumentation 69
Table 10-1. Analytical Laboratory HVAC System Air Flow and Control Diagrams 75
Table 10-2. Analytical Laboratory HVAC Major Components.....76
Table 10-3. Analytical Laboratory HVAC Instrumentation 77
Table 11-1. NGS HVAC System Drawings.....81
Table 11-2. NGS HVAC Major Components.....81

ACRONYMS AND ABBREVIATIONS

°F	degrees Fahrenheit
%	Percent
ADS	Air Dilution System
AFF	Alpha Finishing Facility
AHU	Air Handling Unit
APA	Air Pulse Agitator
ASDT	Alpha Sorption Drain Tank (TK-601)
ASHRAE	American Society of Heating, Refrigerating, and Air-conditioning Engineers
AST-A	Alpha Sorption Tank-A (TK-101)
CCA	Cold Chemicals Area
cfm	Cubic Feet per Minute
CLFL	Composite Lower Flammability Limit
CPA	Central Processing Area
CR	Control Room
CSSX	Caustic-side Solvent Extraction
CWS	Chilled Water System
DCS	Distributed Control System
DG	Diesel Generator
DOE	U.S. Department of Energy
dP	Differential Pressure
DSS	Decontaminated Salt Solution
ft	Feet/foot
FFT-A	Filter Feed Tank-A (TK-102)
FSA	Facility Support Area
ft^2	Square Feet
gpm	Gallons per Minute
GS	General Service
HEPA	High-Efficiency Particulate Air
HNO_3	Nitric Acid
hp	Horse Power
HVAC	Heating, Ventilating, and Air Conditioning
IT	Information Technology
kW	Kilowatt
MCC	Motor Control Center
NPH	Natural Phenomena Hazard
P&ID	Piping and Instrument Diagram
PBVS	Process Building Ventilation System
PC	Performance Category
PMVS	Pulse Mixer Ventilation System
PVVS	Process Vessel Ventilation System
SB	Safety Basis
SDT	Solvent Drain Tank (TK-208)

ACRONYMS AND ABBREVIATIONS (cont.)

SEHT	Strip Effluent Hold Tank (TK-205)
SRS	Savannah River Site
SS	Safety Significant
SSFT	Salt Solution Feed Tank (TK-109)
SSP	Safe Shutdown Panel
SSRT	Sludge Solids Receipt Tank (TK-104)
SWPF	Salt Waste Processing Facility
UPS	Uninterruptible Power Supply
V	Volt
VFD	Variable Frequency Drive
w.g.	Water Gauge
WWHT	Wash Water Hold Tank (TK-105)

DEFINITIONS/GLOSSARY

There are no definitions or glossary items for this System Description.

1.0 SCOPE

The environment (temperature, pressure, humidity, etc.) in the Salt Waste Processing Facility (SWPF) areas is controlled by the heating, ventilating, and air conditioning (HVAC) systems. In addition, the HVAC systems operate to limit the spread of radioactive material to protect workers, the public, and the environment. The HVAC systems for the SWPF include individual systems for specific areas and components. Each HVAC system provides environmental control and, where necessary, radioactive material confinement for a specific area or component. The SWPF HVAC systems include the following individual systems.

- Process Building Ventilation System (PBVS) – The PBVS provides filtered and conditioned outside air to the Process Building for distribution throughout the building. The PBVS maintains a cascading air flow from normally occupied and non-contaminated areas to potentially contaminated areas. The discharge air is filtered by high-efficiency particulate air (HEPA) filters prior to discharge to the atmosphere through the Exhaust Stack.
- Alpha Finishing Facility (AFF) HVAC – The AFF is provided with an independent HVAC System, which provides filtered and conditioned outside air to the AFF for distribution throughout the area. The AFF HVAC system maintains a cascading air flow from normally occupied and non-contaminated areas to potentially contaminated areas. The exhaust air is filtered by HEPA filters prior to discharge to the atmosphere through the Exhaust Stack.
- Control Room (CR) HVAC – The CR is provided with a separate ventilation system that is independent of the PBVS. The CR HVAC has the capability to filter and condition either a combination of outside air and returned air or 100 percent (%) re-circulated air. The CR HVAC allows safe occupancy of the CR to permit Operations personnel to remotely control and monitor the plant in the event of failure of the PBVS or the presence of contamination in the inlet to the PBVS due to the airborne release of hazardous materials from either the SWPF or an adjacent facility.
- Process Vessel Ventilation System (PVVS) – The PVVS provides air flow through the vapor space of process vessels in the Process Building and the contactor vent header to ensure that airborne radioactive material is not released to the environment without being filtered and limits the accumulation of flammable gases. The PVVS draws air from the process Dark Cells into the process vessel vapor space and then into the process vessel vent header. The vented air is then treated and filtered prior to being discharged to the atmosphere through the Exhaust Stack.
- Pulse Mixer Ventilation System (PMVS) – The PMVS provides a filtered path for the vent exhaust air from the Air Pulse Agitators (APAs). The APAs located inside process vessels in the Process Building are vented to the PMVS vent header to exhaust the air pulse. The vented air is then treated and filtered prior to being discharged to the atmosphere through the Exhaust Stack.

- Compressor Building and Cold Chemicals Area (CCA) – Separate ventilation systems are also provided for the CCA and Compressor Building. The CCA HVAC system provides general building ventilation and temperature control. The Compressor Building system provides basic ventilation of unconditioned outside air for cooling and space heaters for heating.
- Process Building Heat Recovery System – In winter, the Process Building Heat Recovery System extracts waste heat from the Process Building stack exhaust duct and returns it to the air supply inlet plenum in order to recover rejected heat from the Process Building. In the summer, the Process Building Heat Recovery System extracts heat from the inlet air and rejects it to the exhaust air.
- Analytical Laboratory HVAC Zone – The Analytical Laboratory is provided with a separate HVAC zone within the PBVS. The Analytical Laboratory HVAC Zone is designed to minimize the potential for chemical or radiological contamination within the Analytical Laboratory occupied areas. All Analytical Laboratory areas receive conditioned and filtered air from the PBVS supply header. The Analytical Laboratory HVAC Zone maintains cascading air flow from the administration areas and corridors toward the three laboratories (Radiochemistry, Inorganic, and Organic) and into the gloveboxes, Hot Cells, and hoods. Exhaust air from the gloveboxes, Hot Cells, and hoods is scrubbed and filtered and then ducted to the main PBVS exhaust systems.
- Safe Shutdown Panel (SSP) Room – The SSP Room is provided with a small split ductless heat pump. The SSP Room houses connections to shut down and monitor the processes, should the main CR become uninhabitable.
- NGS Building HVAC System – The NGS Building is provided with its own general building ventilation and heating. No air conditioning is provided.

The ventilation systems for the Diesel Generator (DG) Enclosure and the Administration Building are outside the scope of this System Description. The Administration Building contains no hazardous or radioactive contaminated materials and is provided with a standard office building HVAC system. The DG Enclosure ventilation primarily supports air flows for the engine intake and radiator cooling and includes an electric space heater.

The SWPF HVAC systems listed above operate to maintain the environment in the various SWPF areas within acceptable levels to support human occupancy and equipment and process operation. The SWPF building design temperature and humidity requirements are found in P-DB-J-00004, *SWPF Balance of Plant Basis Of Design* [1].

The safety analysis requirements related to system functions for this system are documented in Chapter 4 of S-SAR-J-00002, *SWPF Documented Safety Analysis*[2].

The safety analysis requirements related to operability for this system are documented in Chapter 5 of S-SAR-J-00002[2].

As part of the maintenance of the SWPF Master Equipment List (See PP-EN-5042, *Master Equipment List*[3]), all permanent plant equipment is assigned a unique tag number. Each component (equipment, instrumentation, specialty item, etc.) is assigned to one (and only one) CSE system code. Structured Query Language (SQL) reports are generated (real time) off the controlled Master Equipment List. These are filterable by CSE system. A complete listing of all components associated with this system can be found using the following reports, and filtering by HVAC:

- MEL Cables;
- MEL Equipment;
- MEL Instruments;
- MEL Lines;
- MEL Manual Valves; and
- MEL Specialty Items.

Similarly, all essential and support drawings are coded to the appropriate CSE system code (with only one code allowed per drawing). Using the following link: Drawing Category Status, a report may be generated for HVAC and selecting the drawing type (Essential, Support). Reference drawings are not assigned System Codes and not required to be maintained current with facility modifications per PP-EN-5001, *Design Control*[3] and P-CDM-J-00001, *Configuration Management Plan*[4].

2.0 GENERAL OVERVIEW

The following sections provide a general overview of the following systems:

- PBVS;
- AFF HVAC;
- CR HVAC;
- PVVS;
- PMVS;
- Compressor Building and CCA;
- Process Building Heat Recovery System; and
- Analytical Laboratory HVAC System.

Figure 2-1 through Figure 2-8 provides a schematic of each of the above systems.

The detailed sequence of operations is included in SWPF Specification 15940, *SWPF HVAC Sequence of Operations*[5]. The system descriptions for the SWPF processes are as follows: X-SD-J-00001, *SWPF Alpha Strike Process* [6]; X-SD-J-00002, *SWPF Caustic-Side Solvent Extraction*[7];

X-SD-J-00003, *SWPF Cold Chemicals Area* [8]; X-SD-J-00004, *SWPF Alpha Finishing Process* [9]; X-SD-J-00005, *SWPF Drains* [10]; X-SD-J-00006, *SWPF Sampling* [11] and X-SD-J-00007, *SWPF Air Pulse Agitator* [12]. The system description for Electrical is E-SD-J-00002[13], *SWPF Electrical*; Instrumentation and Controls is J-SD-J-00002, *SWPF Instrumentation and Controls* [14]; Fire Protection is F-SD-J-00001, *SWPF Fire Detection / Protection* [15].

2.1 Process Building Ventilation System

The PBVS provides outside air for areas of the Process Building including the Central Processing Area (CPA), Facility Support Areas (FSAs), and Analytical Laboratory. Air Handling Units (AHUs) draw outside air into the Process Building and filter and condition the air before it is distributed through the building. All ventilation systems for the Process Building are designed for once-through air supply/exhaust without re-circulation of internal building air. Air flow within the Process Building is cascaded from areas that have the lowest potential for contamination to areas with the highest potential to become contaminated. PBVS exhaust fans draw air from the most contaminated areas, the Process Cells, through the exhaust HEPA filters. The cascaded air is then exhausted through the Exhaust Stack. The Exhaust Stack is monitored to ensure that the filtration equipment is operating properly. In the event of power loss, the exhaust fans will be powered from the DG. Other portions of the ventilation system, including the AHUs and building chillers, are not powered from the DG.

The PBVS schematic is shown in Figure 2-1 and Figure 2-2.

2.2 Alpha Finishing Facility HVAC

The AFF is provided with an independent HVAC system. The AFF HVAC is a once-through air supply/exhaust system without re-circulation of internal building air. The AFF HVAC system is provided with a dedicated AHU that filters and conditions outside air for distribution to the AFF areas. The AFF exhaust fans draw air from the main process area of the AFF through HEPA filters. Filtered air from the AFF is then directed to the Exhaust Stack for discharge to the atmosphere.

Schematics of the AFF HVAC system are shown in Figure 2-1, Figure 2-3, and Figure 2-4.

2.3 Control Room HVAC

A separate ventilation system is provided for the CR that allows the CR to be isolated from the PBVS. This system has redundant AHUs and chillers. The CR HVAC has the capability to filter and condition either a combination of outside air and returned air or 100% re-circulated air to maintain habitability requirements in the CR. The CR ventilation system (i.e., AHU fans, heating coils, and chiller units/pumps) is provided with standby power from the DG if grid power supply is interrupted.

Schematics of the CR HVAC System are shown in Figure 2-5.

2.4 Process Vessel Ventilation System

The PVVS is designed to maintain process vessels and contactors under a slight vacuum, relative to the room/cell pressure. The vented air is cooled to condense vapors and then filtered to remove any particulates, prior to being combined with the Process Building exhaust. The PVVS is provided with standby power from the DG. Process vessels located within the AFF are passively vented to the AFF building exhaust through a HEPA filter.

Schematics of the PVVS are shown in Figure 2-1, Figure 2-4, and Figure 2-6.

2.5 Pulse Mixer Ventilation System

The PMVS provides a filtered path for the vent exhaust air from the APAs. The vented air from the APAs is treated and filtered prior to being discharged to the atmosphere through the Exhaust Stack. The PMVS is provided with standby power from the DG.

Schematics of the PMVS are shown in Figure 2-1 and Figure 2-7.

2.6 Compressor Building and Cold Chemicals Area

Separate ventilation systems are provided for the Compressor Building and CCA. These systems are designed to provide general building ventilation and temperature control. Ventilation systems for the CCA and Compressor Building are not provided with standby power.

2.7 Process Building Heat Recovery System

During the winter, the Process Building Heat Recovery System extracts waste heat from the Process Building stack exhaust duct and returns it to the air supply inlet plenum, in order to recover the rejected heat from the Process Building. During the summer, the cycle is reversed and the Process Building Heat Recovery System extracts heat from the inlet air and rejects it to the exhaust air to minimize the cooling load on the Process Building. The Process Building Heat Recovery System is not provided with standby power.

A schematic of the Process Building Heat Recovery System is shown in Figure 2-8.

2.8 Analytical Laboratory HVAC Zone

The Analytical Laboratory is provided with a separate HVAC Zone. The Analytical Laboratory HVAC maintains cascading air flow from the administration areas and corridors toward the three laboratories (Radiochemistry, Inorganic, and Organic) and into the gloveboxes, Hot Cells, and hoods. Exhaust air from the gloveboxes, Hot Cells, and hoods is scrubbed and filtered and then ducted to the main PBVS exhaust systems.

A schematic of the Analytical Laboratory HVAC System is shown in Figure 2-1.

2.9 NGS Building

The NGS Building is provided with its own general building ventilation and heating. No air conditioning is provided. The ventilation system for the NGS Building is not provided with standby power.

Figure 2-1. Schematic of Process Building Ventilation System

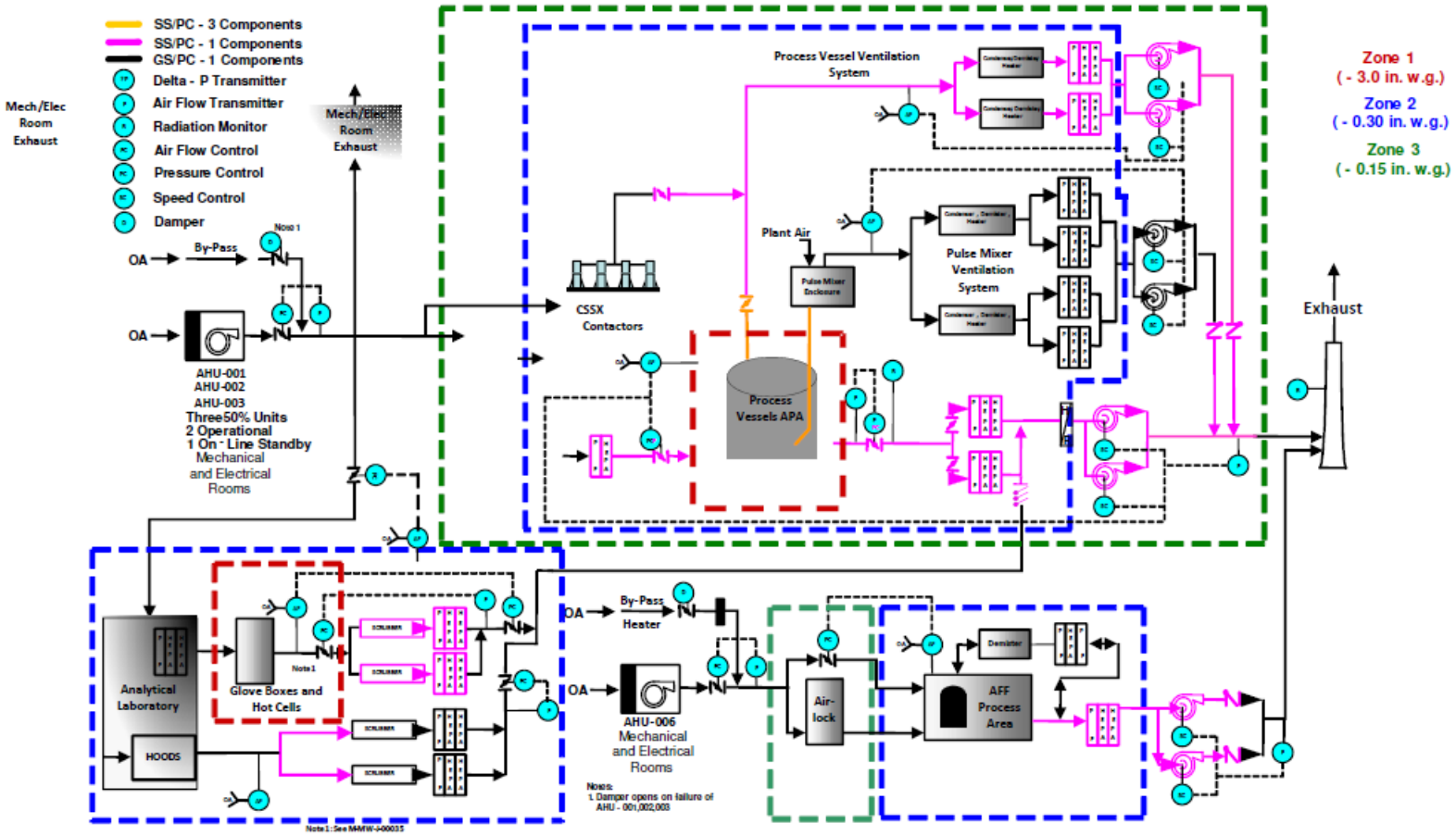

Figure 2-2. SWPF Process Building HVAC Composite Flow Diagram

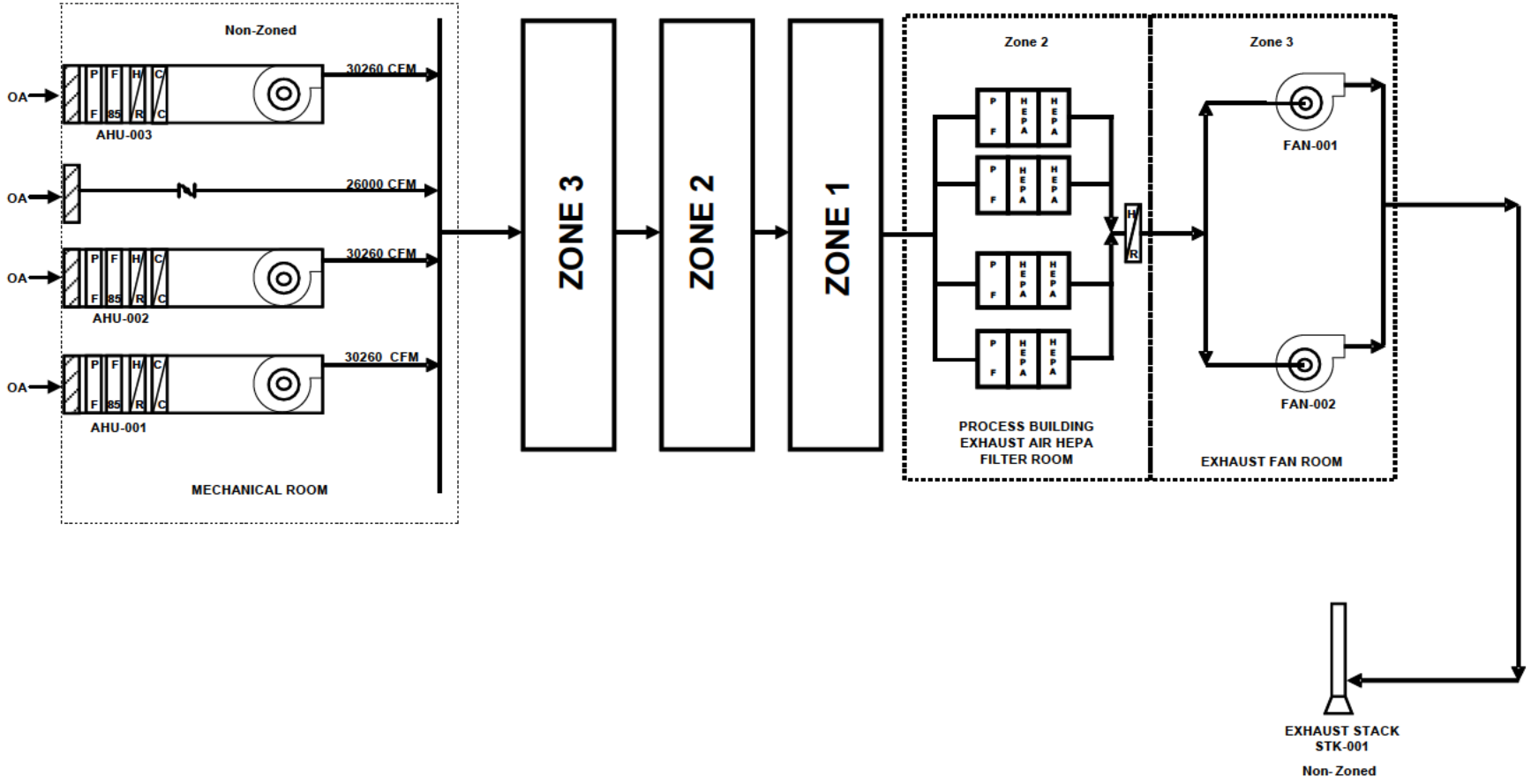

Figure 2-3. SWPF Alpha Finishing Facility Air Flow Control Diagram

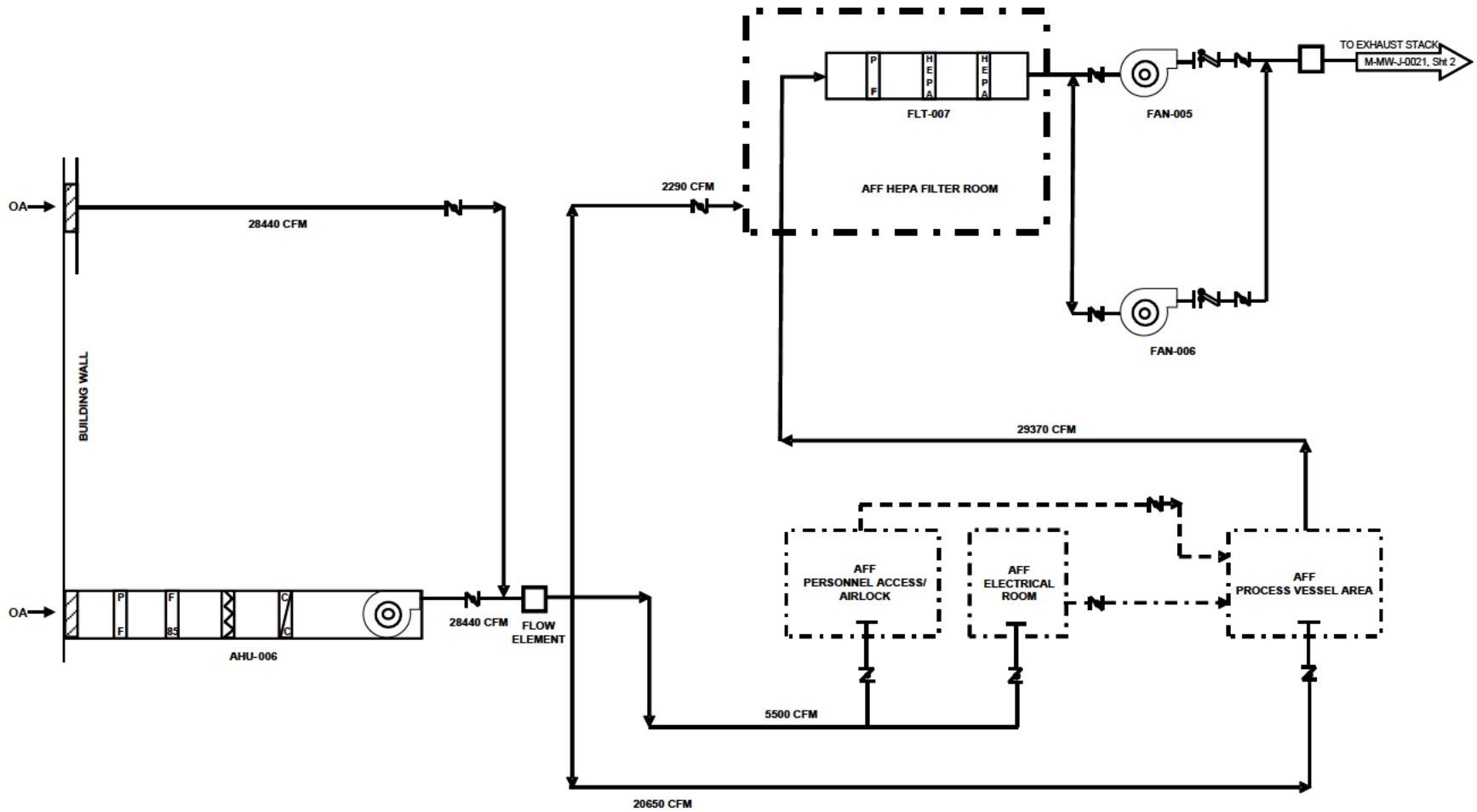

Figure 2-4. SWPF Alpha Finishing Facility Process Vessel Ventilation System Diagram

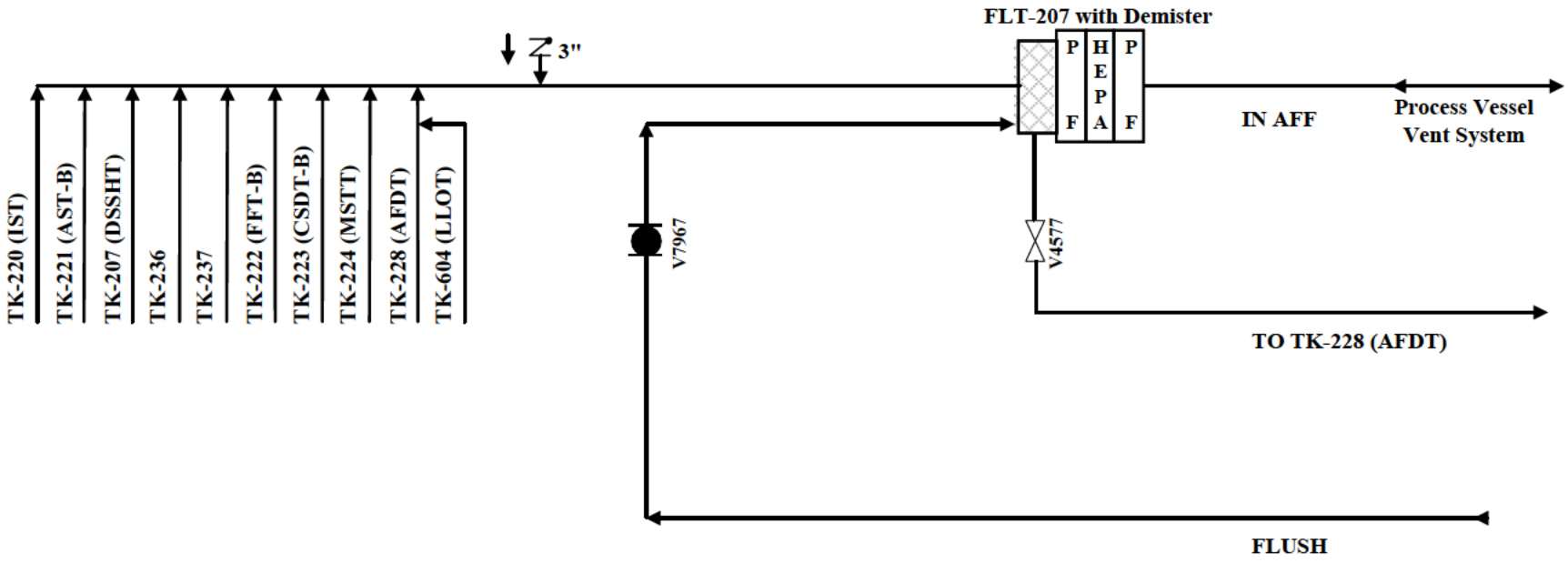

Figure 2-5. Control Room HVAC Arrangement

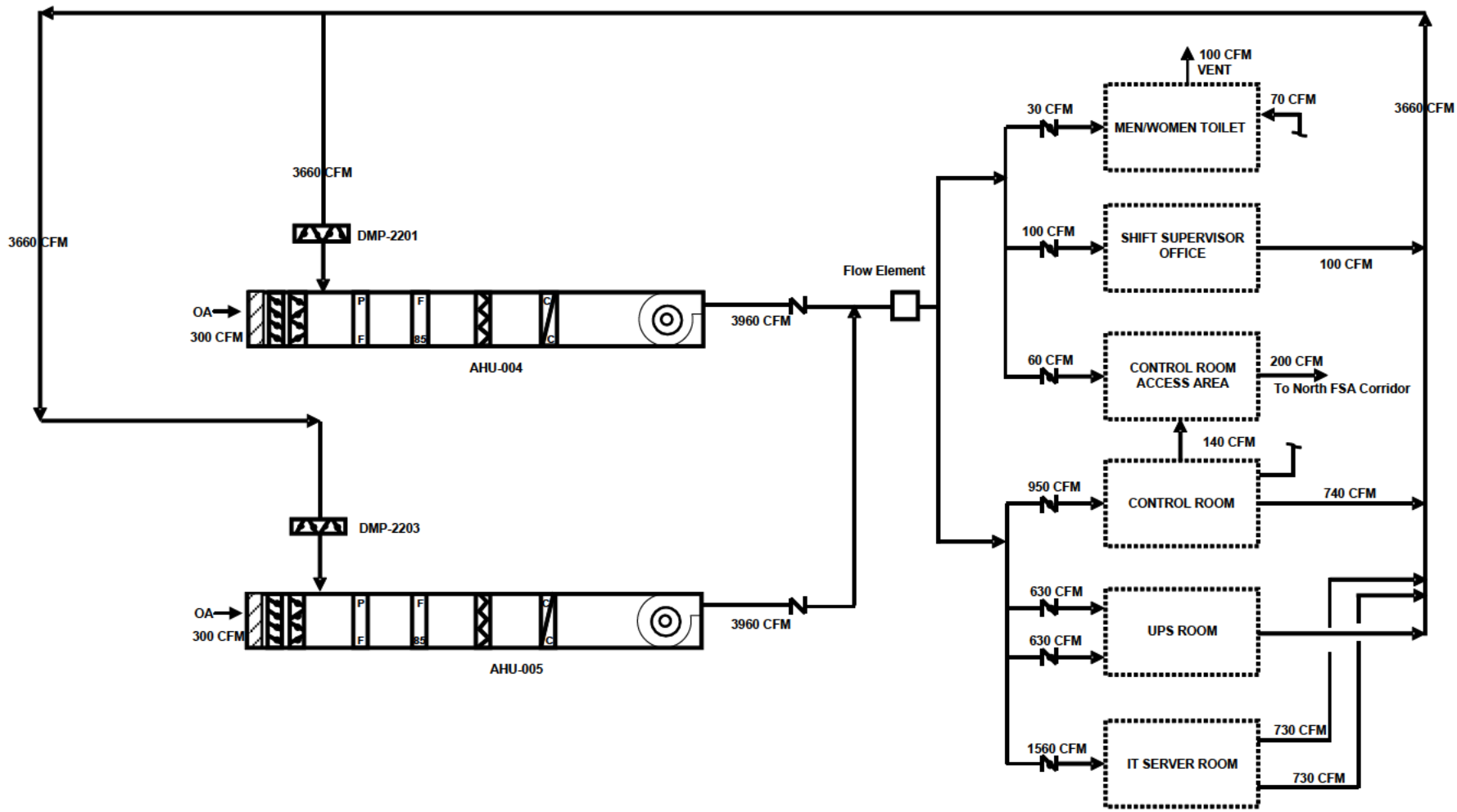

Figure 2-6. Process Vessel Ventilation System Configuration

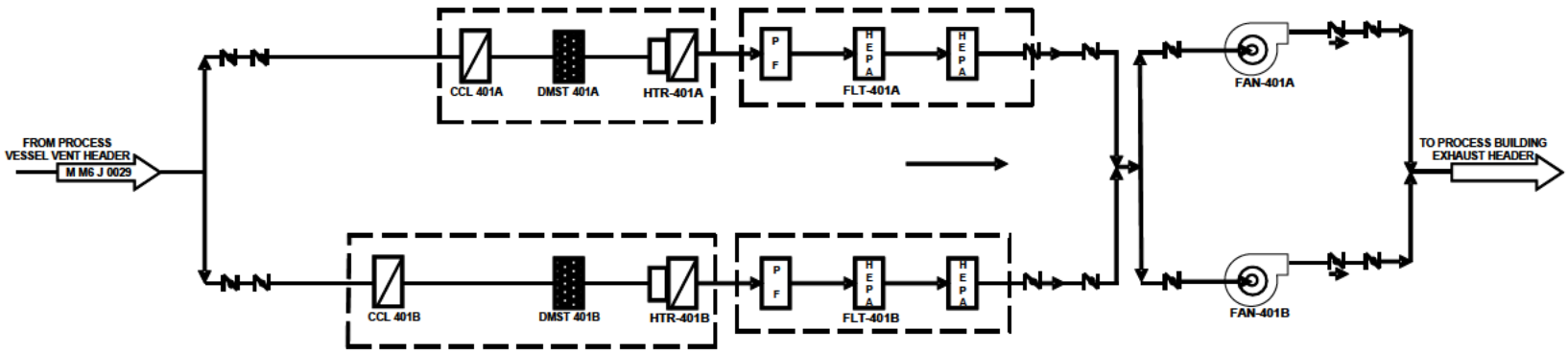

Figure 2-7. Pulse Mixer Ventilation System Configuration

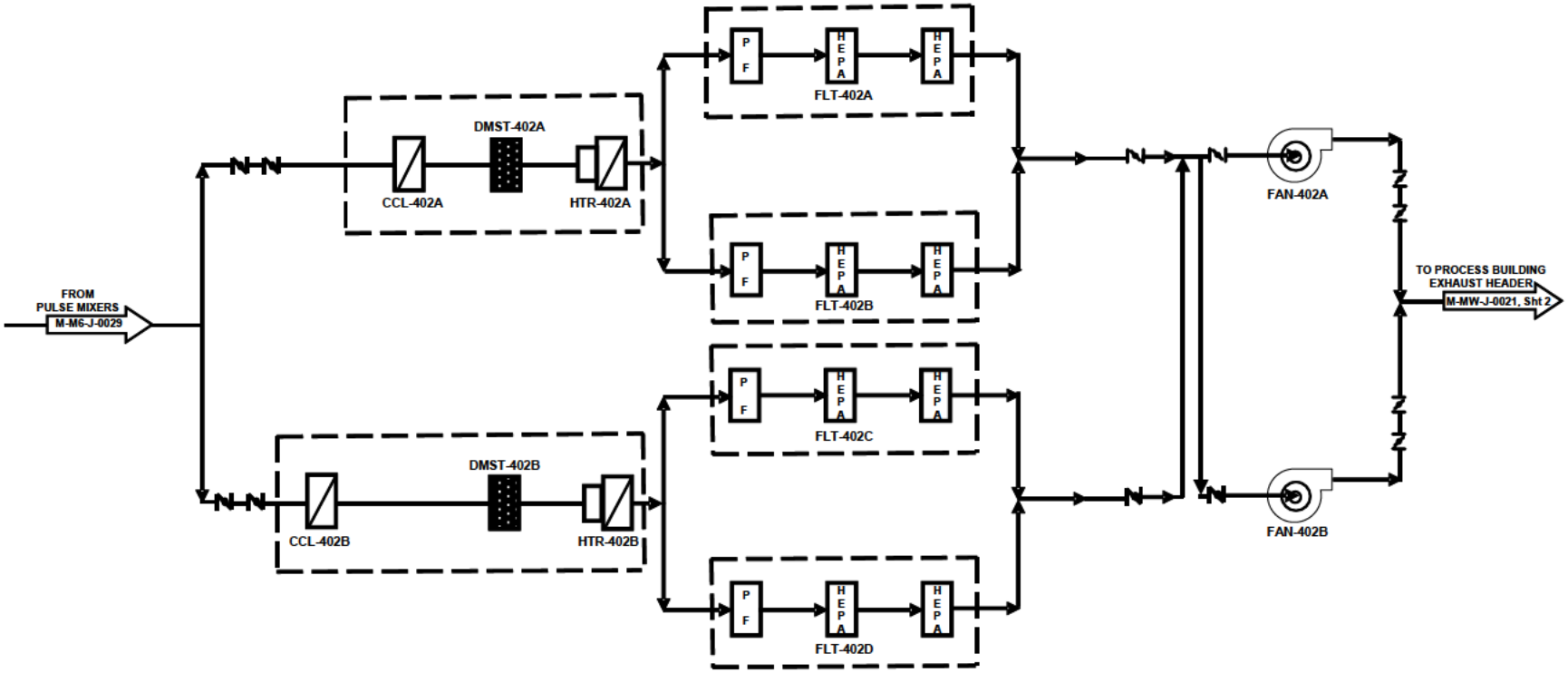

Figure 2-8. Heat Recovery Arrangement

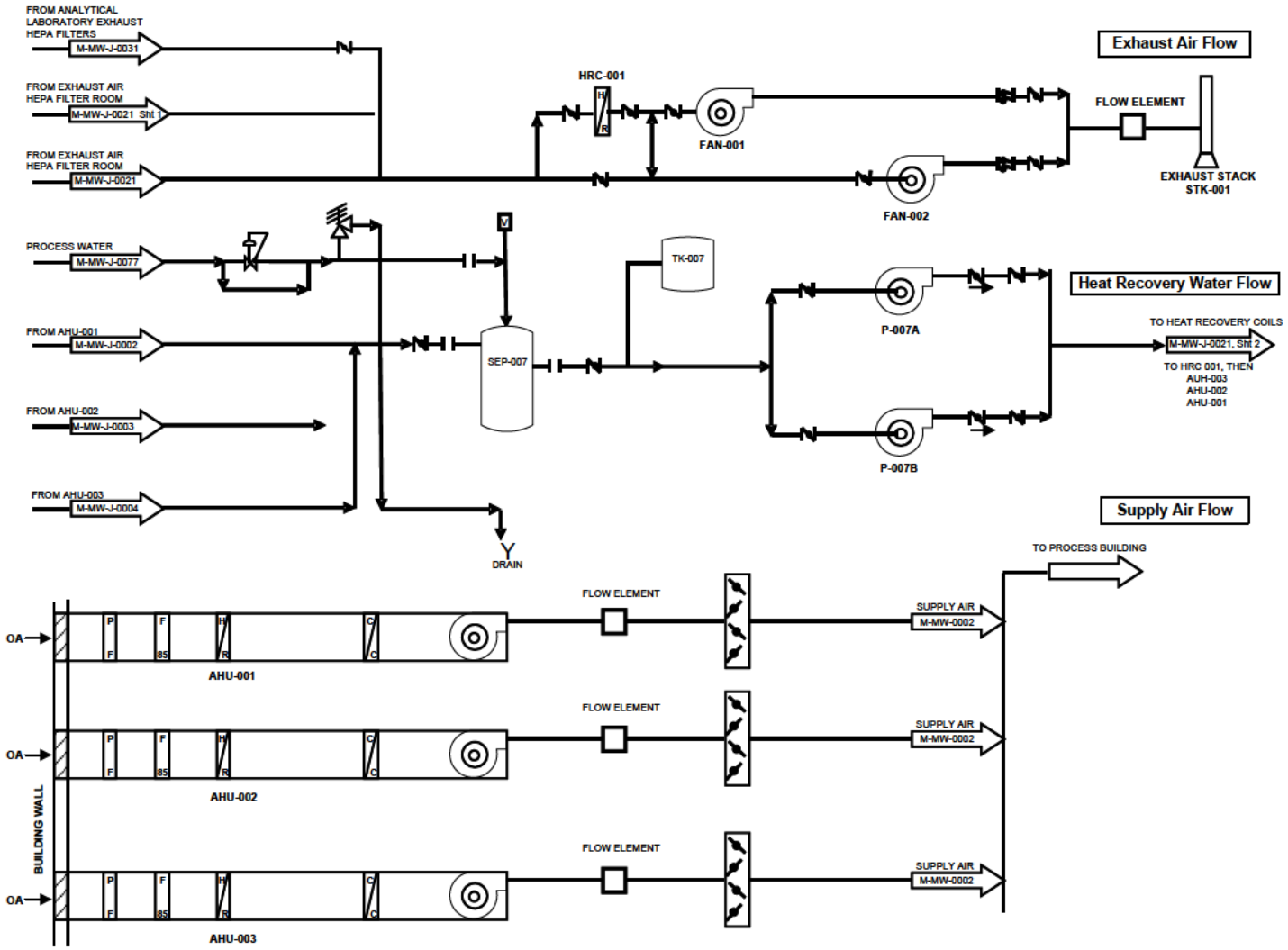

3.0 PROCESS BUILDING VENTILATION SYSTEM

The PBVS consists of supply and exhaust systems that filter, treat, and condition the ambient outside air for use within the SWPF Process Building and filter and treat exhaust air from the Process Building, prior to its release to the atmosphere. The system is a single-pass air system (once-through air supply/exhaust without re-circulation of internal building air). The PBVS is designed to provide confinement of potential airborne radioactive contaminants in all areas of the potentially contaminated Process Building where radiological materials are processed. The radioactive particles are removed from the exhaust air by HEPA filters prior to releasing the exhaust air to the atmosphere through the Exhaust Stack.

3.1 System Functions

The confinement of potential airborne radioactive contaminants is the primary function of the PBVS. The PBVS provides confinement by the use of pressure zones consistent with the guidance of the U.S. Department of Energy (DOE) provided in DOE-HDBK-1169-2003, Nuclear Air Cleaning Handbook: Chapter 2: *System Considerations*[16], and the objectives of P-DB-J-00004[1]. The confinement design for the Process Building is based on three zones. Zone 1 areas are those with the greatest potential for radiological consequences, if an airborne release did occur in the area. Zone 2 areas are those that are normally free of contamination, although there is some likelihood that the areas could become contaminated. Zone 3 areas are those areas that do not normally contain radiological materials. The PBVS maintains differential pressures (dPs) between the three zones, with Zone 1 having the lowest pressure and Zone 3 the highest. All zones are maintained at negative pressure, with respect to the atmosphere to prevent unfiltered releases.

To accomplish this function, the PBVS maintains a cascading air flow from normally occupied non-contaminated areas (Zone 3) to potentially contaminated areas of the SWPF (Zones 1 and 2). The PBVS exhaust fans draw air from the Zone 1 areas of the Process Building. The resulting negative pressure within the Zone 1 areas causes the transfer of air from Zone 2 areas to Zone 1 areas. The transfer of air is accomplished through HEPA filters and ductwork. The PBVS exhaust fans maintain the Zone 1 areas at a negative pressure, with respect to the Zone 2 areas. The PBVS exhaust fans also maintain the Zone 2 areas at a negative pressure, with respect to the normally occupied Zone 3 areas. Finally, the PBVS exhaust fans maintain the Zone 3 areas at a negative pressure, with respect to the atmosphere to ensure that there are no unfiltered releases from the Process Building to the atmosphere. The Zone 1 areas are maintained at a negative pressure of nominal -3.0 inches water gauge (w.g.), the Zone 2 areas are maintained at a negative pressure of nominal -0.30 inches w.g., and the Zone 3 areas are maintained at a negative pressure of nominal -0.15 inches w.g. by the PBVS.

The PBVS ensures that non-negligible airborne releases from non-Natural Phenomena Hazard (NPH) events within the CPA are confined and filtered. Specific events for which the PBVS is credited include an APA overblow event that could result in a positive pressure in the affected process vessel and Process Cell and a pressurized leak (e.g., pump flange). To mitigate the consequences of these events, the PBVS is classified as Safety Significant (SS) and Performance

Category (PC)-1 from the Pump and Valve Gallery exhaust ductwork/balancing damper to the Process Cell inlet HEPA and to the outlet penetration from the CPA. The PBVS is not credited with performing mitigative functions following an NPH event.

In addition to the confinement function, the PBVS also provides filtered and conditioned outside air to the Process Building. The supply air from the PBVS provides ventilation, heating, and cooling of the areas of the Process Building, as required, for occupation and to support operation of the process. The supply air flow is balanced with the exhaust air flow to maintain the required dPs throughout the Process Building.

An overview of the PBVS design is provided by drawing M-MW-J-0001, *SWPF Process Building HVAC Composite Flow Diagram (U)*[17].

3.2 Operational Overview

The PBVS supplies outside air to the Process Building. Outside air is drawn in through two of three 50%-capacity AHUs (AHU-001, -002, and -003). Two AHUs are normally operating, with the third on standby. The standby AHU will automatically start in the event of failure of one of the operating AHUs. The outside air is filtered and tempered, as necessary, by the AHUs prior to being discharged to the distribution ductwork. The cascaded air flow through the Process Building is balanced by a series of manual and automatic dampers and seals. The ducts and dampers separate the building into a “non-zoned” area and three zoned areas of successively less relative (more negative) pressure; the zone of least pressure (most negative compared to atmospheric pressure) would be the zone of highest potential contamination, Zone 1. Loop seals in drains and barrier penetration seals are used throughout the building to maintain pressure boundaries between zones.

The PBVS exhaust fans draw exhaust air through HEPA filters and provide the negative air pressures for the Process Building. The PBVS contains two 100%-capacity exhaust fans (FAN-001 and -002) and four 33%-capacity exhaust HEPA filter assemblies. One exhaust fan is normally operating, with the second on standby. The standby fan will automatically start in the event of failure of the operating fan. The fans discharge the filtered exhaust air flow through ductwork into the Exhaust Stack (STK-001). The exhaust HEPA filter assembly consists of four parallel, two stage, HEPA filter units (FLT-001, -002, -003, and -004). Three of the HEPA filter units are normally in operation, with the fourth on standby. The use of a redundant filter unit allows one operating filter unit to be taken off line to replace filters when increased pressure drop across the filter indicates the need for replacement.

The SWPF PBVS is operated continuously in order to maintain the required pressure zone balance and confinement of radioactive material. The PBVS is designed with sufficient redundancy to allow for single component failure and the removal of operating components from service for normal maintenance and testing without interrupting the safety function of the PBVS.

3.3 Configuration Information

3.3.1 Description of System

The PBVS provides supply air to the Process Building and exhausts air from the building to maintain the pressure zones required for the confinement of radioactive materials. The PBVS is a once-through cascade system. Schematics of the PBVS are shown in Figure 2-1 and Figure 2-2. Supply air is delivered to Zone 2, Zone 3, and non-zoned areas by two of three 50%-capacity AHU supply fans. Exhaust air is drawn from the Process Building by one of two 100%-capacity PBVS exhaust fans. The negative pressure created in Zone 2 by the PBVS exhaust fans will draw air from Zone 3 and Non-Zoned areas to Zone 2 areas. From Zone 2 areas, air is drawn into Zone 1 areas (Process Cells, CSSX Tank Cells, and Analytical Laboratory Hot Cells and gloveboxes) through inlet HEPA filters by the even more negative pressure in the Zone 1 areas generated by the exhaust fans. Ventilation zoning is maintained by the routing of supply, transfer, and exhaust ducts, control of supply and exhaust fan operation, and regulation of control dampers located throughout the system.

Exhaust air from potentially contaminated Zone 1 areas is treated by two stages of HEPA filters prior to being exhausted by the PBVS exhaust fans to the Exhaust Stack. Emissions from the Exhaust Stack are monitored by in-line radiation monitors to detect any potential releases of radioactive material.

The PBVS also maintains Process Building temperatures for worker comfort, to remove process and equipment heat loads, and to prevent process upsets due to excessive temperature or freezing. The outside air is filtered by the PBVS supply AHUs to remove dust. The AHUs also provide heating or cooling of the supply air, as necessary, to control the temperature and humidity of air in the Process Building.

Supply air to the Facility Support Area (FSA) and CPA areas of the Process Building is supplied from the outside by the PBVS supply AHUs. Outside air is supplied to the Zone 3 areas (CPA Corridors), Non-Zoned areas (East and North FSA), Zone 2 areas (Operating Deck), and the Analytical Laboratory areas by two of the three 50%-capacity PBVS supply AHUs (AHU-001, -002, and -003). Two of the AHUs are normally operating, with the third on standby or in maintenance, when necessary. The standby AHU will automatically start if one of the operating AHUs fails. Each AHU is rated to supply 30,260 cubic feet per minute (cfm) of outside air flow for a total outside air flow of 60,520 cfm to the Process Building.

Outside air louvers with bird screens provide air intake to the supply AHUs. Each AHU includes a roughing pre-filter, an 85%-efficiency particulate filter, a heat recovery coil, a chilled water cooling coil, and a centrifugal supply fan. An automatic flow control damper is also provided on each AHU discharge duct to maintain a constant air flow rate from the AHU, and to isolate the fan and prevent backflow when the fan is idle.

Two, 50% capacity, air-cooled chillers (CHU-001A/B) provide chilled water to the AHU cooling coils to provide cooling of the supply air as necessary to maintain the required temperatures

inside the Process Building. A temperature element at the discharge of each AHU modulates the chilled water flow to the AHU cooling coils to maintain the required discharge air temperature from the AHUs to maintain building temperatures within acceptable limits. Heat recovery water pumps circulate a mixture of water and 25% propylene glycol between the heat recovery coils in the AHUs and in the ductwork upstream of the PBVS exhaust fans to heat the incoming outside air, when the outside air temperature is below the low set point or to cool the incoming outside air when the outside air temperature is above the high set point.

The PBVS supply air is supplied to seven temperature zones:

- Mechanical and Electrical Rooms;
- Operating Deck;
- Corridor, Toilet/Locker Rooms, Administration Offices, Health Physics Rooms, and Controlled Entry Area;
- Truck Bay/Dock;
- Storage Areas and Maintenance Shops;
- Exhaust Fan Room and Clean HEPA Filter Storage/Staging areas; and
- Analytical Laboratory.

Electrical heating coils are located in the supply branch ducts to each of the above supply air zones to individually control the temperature. Zone temperature elements control the heating coils for each zone.

Automatic bypass damper (HCD-4195) is provided that will open if all PBVS supply AHUs are not operating. This damper is located in ductwork connected to a dedicated outside air louver and will provide a flow path around the PBVS supply AHUs in the event of AHU failure. This feature provides a means of supplying outside air to the Process Building during unavailability of the normal flow path.

The PBVS supply AHUs deliver supply air to the Zone 3 and Non-Zoned areas, Operating Deck (a Zone 2 area), and Analytical Laboratory (Zone 2) through sheet metal ducts. The air in the Zone 3 and Non-Zoned areas is then transferred to Zone 2 areas through transfer ducts. Manual balancing dampers are located in the transfer ducts to allow regulation of the flow.

Inlet air passes through single-stage HEPA filters located in the Cell Inlet Air HEPA Filter Rooms #1 (R303) and #2 (R214) or through individual inlet HEPA filters attached to each glovebox in the Analytical Laboratory before the air enters the Zone 1 area. These filters are intended to prevent the backflow of contaminants in the event of air flow reversal from Zone 1. The transfer ducts contain manual balancing dampers to allow regulation of the air flow to Zone 1 areas.

Air is drawn out of the Zone 1 areas through exhaust ducts by the PBVS exhaust fans. These exhaust ducts are located above the cell floor at an elevation to preclude the intake being submerged in the event of a leak or inadvertent transfer event in a cell. The supply ducts are generally located near the top of the cell and on opposite sides from the exhaust ducts. This design promotes cell sweeping and settling of any airborne particulates toward the exhaust duct, minimizing re-suspension of particulates due to air currents.

An automatic control damper is located in each Process and CSSX Tank Cell supply duct to control the cell pressure to nominal -3.0 inches w.g., with respect to the atmospheric pressure. This ensures that the Process and CSSX Tank Cells are maintained at a negative pressure, with respect to the pressure in the Zone 2 areas.

The exhaust from the Process Cells and the East and West CSSX Tank Cells is continuously monitored for radiation. If high radiation is detected, the exhaust from each cell will be tested at local sample ports to find the source. If the source of contamination (e.g., vessel overflow, air sparging waste) cannot be stopped quickly, ventilation flow through the cell with high radiation level can be reduced or the cell can be isolated by closing the cell inlet damper to minimize loading on the exhaust HEPA filters. The cell inlet damper will also automatically close if high temperature in the cell is detected.

Exhaust air from the Zone 1 areas is drawn through a HEPA filtration unit by the PBVS exhaust fans. The PBVS contains four HEPA filtration units. The PBVS exhaust filter train consists of four parallel filter housings (FLT-001, -002, -003, and -004). Each filter housing is designed to handle one-third of the total exhaust flow. Three of the filter housings are normally in operation, with the fourth on standby. If one of the operating filter housings must be taken from service, the standby housing can be manually aligned to maintain 100% filtration capacity. Each filter housing contains a roughing pre-filter stage and two stages of HEPA filters in series. The HEPA filters have an efficiency for particulate removal of 99.97% at 0.3-micron particle size. The filter housings are stainless steel and are designed with bag-in/bag-out capability for filter replacement.

All PBVS HEPA filters are equipped with sectional inlet and outlet dish-style isolation dampers so that HEPA filter cartridges can be replaced while the remainder of the HEPA filter housing remains operational.

The PBVS cell inlet contains two 100%-capacity exhaust fans (FAN-001 and -002). One fan is normally in operation, with the second fan on standby. If the operating fan cannot maintain flow, the standby fan will automatically start. Each fan is capable of supplying the required flow rate of the exhaust air (nominal 53,385 cfm) from the Process Building. The exhaust fans are driven by a Variable Frequency Drive (VFD)-controlled motor. The exhaust fans are up-blast centrifugal fans with heavy-gauge steel casings. An automatic damper is provided on the outlet of each fan. Manual dampers are also provided at the inlet of each fan to allow isolation of the fan, if necessary. The PBVS exhaust fans are powered by the Standby Bus Motor Control Centers (MCCs). A heat recovery coil is located in the ducting at the inlet to the fans. The

closed-loop water system to the coils circulates water between the coil located at the fan inlet and those located in the PBVS supply AHUs.

The PBVS exhaust header is ducted to the Exhaust Stack for discharge to the atmosphere.

Non-confinement areas (e.g., support areas) are ventilated via unfiltered roof fans that exhaust the balance of the incoming air volume. Some areas in the Process Building have roof-mounted exhaust fans that do not discharge to the Process Building Exhaust Stack (STK-001). Table 3-1 lists the non-contaminated (non-zoned) air areas within the Process Building that are supplied from the Process Building AHUs, but are exhausted by the powered roof fans or ventilators.

Table 3-1. Process Building Non-Contaminated Air Areas Exhausted by Roof Fans

Facility Area	Affected Rooms	Roof Fan(s)	Nominal Air Flow Volume (cfm)
North Support Area	Break Room, Men's Toilet/Locker, Women's Toilet/Locker and Janitor's Closet	7	1,030
East Support Area	Truck Bay and Mechanical Maintenance Shop	9 and 10	5,960

The Electrical and Mechanical Rooms in the Northern Support Areas are ventilated by gravity roof ventilators (VLR-001 and -002).

The PBVS is shown in detail in the Air Flow and Control Diagrams listed in Table 3-2.

Table 3-2. Air Flow and Control Diagrams

Diagram Number	Diagram Title
M-MW-J-0001	*SWPF – Process Building HVAC Composite Flow Diagram (U)*[17]
M-MW-J-0002	*SWPF Process Building HVAC Building Supply Air Handling Unit AHU-001 Air Flow and Control Diagram* ***(U)***[18]
M-MW-J-0003	*SWPF Process Building HVAC Building Supply Air Handling Unit AHU-002 Air Flow and Control Diagram* ***(U)***[19]
M-MW-J-0004	*SWPF Process Building HVAC Building Supply Air Handling Unit AHU-003 Air Flow and Control Diagram* ***(U)***[20]
M-MW-J-0006	*SWPF Process Building Building Supply Air Facility Support Area Air Flow and Control Diagram* ***(U)***[21]
M-MW-J-0008	*SWPF Process Building Building Supply Air Facility Support Area Air Flow and Control Diagram* ***(U)***[22]
M-MW-J-0009	*SWPF Process Building Building Supply Air Facility Support Area Air Flow and Control Diagram* ***(U)***[23]

Table 3-2. Air Flow and Control Diagrams (cont.)

Diagram Number	Diagram Title
M-MW-J-0010	*SWPF Process Building Building Supply Air Analytical Laboratory Area Air Flow and Control Diagram* ***(U)***[24]
M-MW-J-0011	*SWPF Process Building Building Supply Air Northern Central Process Area Air Flow and Control Diagram* ***(U)***[25]
M-MW-J-0012	*SWPF Process Building Operating Deck Air Flow and Control Diagram* ***(U)***[26]
M-MW-J-0013	*SWPF Process Building Building Supply Air Central Process Pump and Valve Galleries and Support Areas Air Flow and Control Diagram* ***(U)***[27]
M-MW-J-0014	*SWPF Process Building AST-A Cell Air Flow and Control Diagram* ***(U)***[28]
M-MW-J-0015	*SWPF Process Building FFT-A Cell Air Flow and Control Diagram* ***(U)***[29]
M-MW-J-0016	*SWPF Process Building SSRT/WWHT Cell Air Flow and Control Diagram* ***(U)***[30]
M-MW-J-0017	*SWPF Process Building SSFT Cell Air Flow and Control Diagram* ***(U)***[31]
M-MW-J-0018	*SWPF Process Building SEHT Cell Air Flow and Control Diagram* ***(U)***[32]
M-MW-J-0019	*SWPF Process Building East and West CSSX Tank Cells Air Flow and Control Diagram* ***(U)***[33]
M-MW-J-0021 SH1	*SWPF Process Building HEPA Filter Exhaust Air Flow and Control Diagram* ***(U)***[34]
M-MW-J-0021 SH2	*SWPF Process Building Exhaust Air Air Flow and Control Diagram* ***(U)***[35]
M-MW-J-00033	*SWPF Process Building ASDT Cell Air Flow and Control Diagram* ***(U)***[36]
P-PZ-J-0001	*SWPF Process Building HVAC Confinement Zone and Pressurization Plan at EL 88'-6", 92'-0", 95'-0" and 100'-0"* ***(U)***[37]
P-PZ-J-0002	*SWPF Process Building HVAC Confinement Zone and Pressurization Plan at EL 116'-0"* ***(U)***[38]
P-PZ-J-0003	*SWPF Process Building HVAC Confinement Zone and Pressurization Plan at EL 124'-0"* ***(U)***[39]
P-PZ-J-0004	*SWPF Process Building HVAC Confinement Zone and Pressurization Plan at EL 139'-0"* ***(U)***[40]

3.3.2 Major Components

The Process Building HVAC System consists of the following major equipment listed in Table 3-3:

The PBVS interfaces with Heat Recovery System, Distributed Control System (DCS), the Electrical Power System, Chilled Water System (CWS), Sanitary Sewer System, and the Plant Air System.

Table 3-3. PBVS Major Components

Component	Description
AHU-001, AHU-002, and AHU-003 (Supply Air AHUs)	Each AHU includes a roughing pre-filter, an 85%-efficiency particulate filter, a heat recovery coil, a chilled water cooling coil, and a centrifugal supply fan. Each AHU is rated at 30,260 cfm. The centrifugal supply fan in the AHU is rated at 50-horse power (hp);
	Four inlet outside air louvers each equipped with bird screens
FCD-4113, FCD-4128, and FCD-4133	Pneumatic operated discharge open/closed Flow Control Dampers, one for each supply AHU
TV-4114B, TV-4129B, and TV-4134B	Hot water heat recovery coil and pneumatic-operated control valve, one for each supply AHU
TV-4114A, TV-4129A, and TV-4134A	Chilled water coil and pneumatic-operated control valve, one for each supply AHU
FAN-007, FAN-009, and FAN-010	Three roof-mounted fans equipped with back-draft dampers
HCD-4195	Pneumatic operated Outside Air to Facility Supply Damper
	Seven electrical heating coils located within the zone ductwork. The electrical heating coils are 3-phase 460 Volt (V) units. The power requirements and locations of the heating coils are shown in Table 3-4
FAN-001 and FAN-002	Main exhaust fans - The exhaust fans are centrifugal fans with heavy gauge steel casings. The fans are driven by a VFD-controlled motor. Each fan motor is rated at 350 hp and each fan is capable of supplying 53,385 cfm of flow
FLT-001, FLT-002, FLT-003, and FLT-004	Four HEPA filter housings - Each filter housing contains a roughing pre-filter and two stages of HEPA filter in series. The HEPA filters have a particulate removal efficiency of 99.97% at 0.3-micron particulate size. The filter housings are stainless steel and are designed with bag-in/bag-out capability for filter replacement. Each filter unit is capable of passing approximately 14,210 cfm of air flow
	HEPA filter housings FLT-001, FLT-002, FLT-003, and FLT-004 are equipped with automatic heat detection and manually actuated fire protection spray nozzles
STK-001	Exhaust Stack

Table 3-4. Process Building Heating Coils

Electric Heating Coil Number	Process Building Heating Zones	Power Required Kilowatt (kW)
1	Mechanical and Electrical Room (EHC-001)	49
3	Operating Deck (EHC-003)	317
4	Corridor, Toilet/Locker Rooms, Administration Offices, Health Physics Rooms (EHC-004)	105
5	Filter Storage, Exhaust Fan Room (EHC-005)	113
6	Analytical Laboratory (EHC-006)	198
7	Storage Areas, General Maintenance (EHC-007)	122
8	Truck Bay (EHC-008)	55

3.3.3 Stream Data

The PBVS provides outside air to the Process Building that discharges to the Exhaust Stack (STK-001).

3.3.4 Physical Location and Layout

The PBVS supply AHUs are located in the Mechanical Room (R114) located on elevation 100' of the Northern FSA. The PBVS exhaust HEPA filter units are located in the Process Building Exhaust HEPA Filter Room (R203) on elevation 116' of the CPA. The PBVS exhaust fans are located in the Process Building Exhaust Fan Room (R202) on elevation 116' of the CPA. The Process Cell inlet HEPA filters are located in the Cell Inlet Air HEPA Filter Room #1 (R303) on elevation 139' of the CPA. The CSSX Tank Cell inlet HEPA filters are located in Cell Inlet Air HEPA Filter Room #2 (R214) on elevation 116' of the CPA.

3.3.5 System Control Features and Interlocks

3.3.5.1 System Monitoring

The PBVS supply AHUs are monitored for status (on/off), dP across the filters, discharge air flow rate, and discharge air temperature. The PBVS exhaust fans are monitored for dP across the fan and fan speed. The total exhaust flow rate is monitored, as well as the flow out of each cell. The PBVS exhaust HEPA filter housings are monitored for dP across each of the filters. The pressure in each of the Process Cells and the CSSX Tank Cells is monitored, as well as the temperature of the outlet air from each cell and the dP across the cell inlet HEPA filter. Temperature monitoring is provided throughout the Process Building. Inlet flow to the East and West CSSX Tank Cells HEPA filter is also monitored for radiation.

See Table 3-5 for a listing of instruments.

Table 3-5. PBVS Instrumentation

Initiator Tag	Alarm Setpoint Document	Drawing
FI-4120	J-JZ-J-01006, *SWPF FI-4120 Stack Flowrate*[41]	M-MW-J-0021 SH2[35]
FIC-6056	J-JZ-J-00933, *SWPF FIC-6056 CCA AHU-008 Airflow*[42]	M-MW-J-0007, *SWPF Process Building Cold Chemicals Area Air Flow and Control Diagram*[43]
FIC-6062	J-JZ-J-00934, *SWPF FIC-6062 CCA AHU-009 Airflow*[44]	M-MW-J-0007[43]
FIC-4003	J-JZ-J-00969, *SWPF FIC-4003 SSFT Cell Exhaust Airflow*[45]	M-MW-J-0017[31]
FIC-4013	J-JZ-J-00974, *SWPF FIC-4013 SEHT Cell Exhaust Airflow*[46]	M-MW-J-0018[32]
FIC-4020	J-JZ-J-00959, *SWPF FIC-4020 FFT-A Cell Exhaust Airflow*[47]	M-MW-J-0015[29]
FIC-4033	J-JZ-J-00954, *SWPF FIC-4033 AST-A Cell Exhaust Airflow*[48]	M-MW-J-0014[28]
FIC-4043	J-JZ-J-00919, *SWPF FIC-4043 ASDT Cell Airflow*[49]	M-MW-J-00033[36]
FIC-4053	J-JZ-J-00964, *SWPF FIC-4053 SSRT/WWHT Cell Airflow*[50]	M-MW-J-0016[30]
FIC-4057	J-JZ-J-00979, *SWPF FIC-4057 East CSSX Tk Cell Airflow*[51]	M-MW-J-0019[33]
FIC-4063	J-JZ-J-00986, *SWPF FIC-4063 West CSSX TK Cell Airflow*[52]	M-MW-J-0019[33]
FIC-4079	J-JZ-J-01007, *SWPF FIC-4079 PB Exhaust Flowrate*[53]	M-MW-J-0021 SH2[35]
FIC-4113	J-JZ-J-00896, *SWPF FIC-4113 PB HVAC AHU-001 Airflow*[54]	M-MW-J-0002[18]
FIC-4128	J-JZ-J-00904, *SWPF FIC-4128 PB AHU-002 Airflow*[55]	M-MW-J-0003[19]
FIC-4133	J-JZ-J-00926, *SWPF FIC-4133 PB AHU-003 Airflow*[56]	M-MW-J-0004[20]
PDI-4001	J-JZ-J-00971, *SWPF PDI-4001 SSFT Cell Inlet FLT-010 Pre Filter dP*[57]	M-MW-J-0017[31]
PDI-4002	J-JZ-J-00972, *SWPF PDI-4002 SSFT Cell Inlet FLT-010 HEPA dP*[58]	M-MW-J-0017[31]
PDI-4010	J-JZ-J-00977, *SWPF PDI-4010 SEHT Cell Inlet FLT-011 HEPA dP*[59]	M-MW-J-0018[32]

Table 3-5. PBVS Instrumentation (cont.)

Initiator Tag	Alarm Setpoint Document	Drawing
PDI-4011	J-JZ-J-00976, *SWPF PDI-4011 SEHT Cell Inlet FLT-011 Pre Filter dP*[60]	M-MW-J-0018[32]
PDI-4030	J-JZ-J-00956, *SWPF PDI-4030 AST-A Cell Inlet FLT-013 HEPA dP*[61]	M-MW-J-0014[28]
PDI-4031	J-JZ-J-00957, *SWPF PDI-4031 AST-A Cell FLT-013 Pre Filter dP*[62]	M-MW-J-0014[28]
PDI-4037	J-JZ-J-00967, *SWPF PDI-4037 SSRT/WWHT Cell Inlet FLT-012 HEPA dP*[63]	M-MW-J-0016[30]
PDI-4039	J-JZ-J-00998, *SWPF PDI-4039 PB FLT-004 HEPA dP*[64]	M-MW-J-0021 SH1[34]
PDI-4040	J-JZ-J-00921, *SWPF PDI-4040 ASDT Cell Inlet FLT-014 HEPA dP*[65]	M-MW-J-00033[36]
PDI-4041	J-JZ-J-00922, *SWPF PDI-4041 ASDT Cell Inlet FLT-014 Pre Filter dP*[66]	M-MW-J-00033[36]
PDI-4051	J-JZ-J-00966, *SWPF PDI-4051 SSRT/WWHT Cell Inlet FLT-012 Pre Filter dP*[67]	M-MW-J-0016[30]
PDI-4061	J-JZ-J-00981, *SWPF PDI-4061 CSSX Tk Cell FLT-015 Pre Filter dP*[68]	M-MW-J-0019[33]
PDI-4066	J-JZ-J-00961, *SWPF PDI-4066 FFT-A Cell Inlet FLT-016 Pre Filter dP*[69]	M-MW-J-0015[29]
PDI-4068	J-JZ-J-00999, *SWPF PDI-4068 PB FLT-001 HEPA dP*[70]	M-MW-J-0021 SH1[34]
PDI-4075	J-JZ-J-01000, *SWPF PDI-4075 PB FLT-003 HEPA dP*[71]	M-MW-J-0021 SH1[34]
PDI-4076	J-JZ-J-00982, *SWPF PDI-4076 CSSX Tk Cell FLT-015 HEPA dP*[72]	M-MW-J-0019[33]
PDI-4077	J-JZ-J-01008, *SWPF PDI-4077 PB Exhaust Fan dP*[73]	M-MW-J-0021 SH2[35]
PDI-4085	J-JZ-J-00962, *SWPF PDI-4085 FFT-A Cell Inlet FLT-016 HEPA dP*[74]	M-MW-J-0015[29]
PDI-4087	J-JZ-J-00989, *SWPF PDI-4087 PB HEPA Header Vacuum*[75]	M-MW-J-0021 SH1[34]

Table 3-5. PBVS Instrumentation (cont.)

Initiator Tag	Alarm Setpoint Document	Drawing
PDI-4090	J-JZ-J-00950, *SWPF PDI-4090 CSSX and South ASP P&V Corr Vacuum*[76]	M-MW-J-0013[27]
PDI-4091	J-JZ-J-00948, *SWPF PDI-4091 Contactor Operating Deck Vacuum*[77]	M-MW-J-0012[26]
PDI-4108	J-JZ-J-01001, *SWPF PDI-4108 PB FLT-002 HEPA dP*[78]	M-MW-J-0021 SH1[34]
PDI-4111	J-JZ-J-00898, *SWPF PDI-4111 PB AHU-001 Pre Filter dP*[79]	M-MW-J-0002[18]
PDI-4112	J-JZ-J-00899, *SWPF PDI-4112 PB AHU-001 Final Filter dP*[80]	M-MW-J-0002[18]
PDI-4125	J-JZ-J-00902, *SWPF PDI-4125 PB AHU-002 Pre Filter dP*[81]	M-MW-J-0003[19]
PDI-4126	J-JZ-J-00903, *SWPF PDI-4126 PB AHU-002 Final Filter dP*[82]	M-MW-J-0003[19]
PDI-4131	J-JZ-J-00927, *SWPF PDI-4131 PB AHU-003 Pre Filter dP*[83]	M-MW-J-0004[20]
PDI-4132	J-JZ-J-00928, *SWPF PDI-4132 PB AHU-003 Final Filter dP*[84]	M-MW-J-0004[20]
PDI-4241	J-JZ-J-00951, *SWPF PDI-4241 North ASP P&V Corr Vacuum*[85]	M-MW-J-0013[27]
PDI-4242	J-JZ-J-00952, *SWPF PDI-4242 Drum Off/Decon Area Vacuum*[86]	M-MW-J-0013[27]
PDIC-4321	J-JZ-J-00945, *SWPF PDIC-4321 Lab Entry & East/South Lab Corridor Vacuum*[87]	M-MW-J-0010[24]
PDI-6052	J-JZ-J-00935, *SWPF PDI-6052 CCA AHU-008 Pre Filter/Filter dP*[88]	M-MW-J-0007[43]
PDI-6058	J-JZ-J-00936, *SWPF PDI-6058 CCA AHU-009 Pre Filter/Filter dP*[89]	M-MW-J-0007[43]
PDIC-4008	J-JZ-J-00970, *SWPF PDIC-4008 SSFT Cell Vacuum*[90]	M-MW-J-0017[31]
PDIC-4012	J-JZ-J-00975, *SWPF PDIC-4012 SEHT Cell Vacuum*[91]	M-MW-J-0018[32]
PDIC-4032	J-JZ-J-00955, *SWPF PDIC-4032 AST-A Cell Vacuum*[92]	M-MW-J-0014[28]

Table 3-5. PBVS Instrumentation (cont.)

Initiator Tag	Alarm Setpoint Document	Drawing
PDIC-4042	J-JZ-J-00920, *SWPF PDIC-4042 ASDT Cell Vacuum*[93]	M-MW-J-00033[36]
PDIC-4052	J-JZ-J-00965, *SWPF PDIC-4052 SSRT/WWHT Cell Vacuum*[94]	M-MW-J-0016[30]
PDIT-4062A	J-JZ-J-00980, *SWPF PDIT-4062A West CSSX Cell Vacuum*[95]	M-MW-J-0019[33]
PDIT-4062B	J-JZ-J-00987, *SWPF PDIT-4062B East CSSX Cell Vacuum*[96]	M-MW-J-0019[33]
PDIC-4067	J-JZ-J-00960, *SWPF PDIC-4067 FFT-A Cell Vacuum*[97]	M-MW-J-0015[29]
PDI-4038	J-JZ-J-00994, *SWPF PDI-4038 PB FLT-004 Primary HEPA dP*[98]	M-MW-J-0021 SH1[34]
PDI-4047	J-JZ-J-00990, *SWPF PDI-4047 PB FLT-004 Pre Filter dP*[99]	M-MW-J-0021 SH1[34]
PDI-4071	J-JZ-J-00991, *SWPF PDI-4071 PB FLT-002 Pre Filter dP*[100]	M-MW-J-0021 SH1[34]
PDI-4072	J-JZ-J-00992, *SWPF PDI-4072 PB FLT-001 Pre Filter dP*[101]	M-MW-J-0021 SH1[34]
PDI-4073	J-JZ-J-00993, *SWPF PDI-4073 PB FLT-003 Pre Filter dP*[102]	M-MW-J-0021 SH1[34]
PDI-4074	J-JZ-J-00995, *SWPF PDI-4074 PB FLT-003 Primary HEPA dP*[103]	M-MW-J-0021 SH1[34]
PDI-4089	J-JZ-J-00996, *SWPF PDI-4089 PB FLT-001 Primary HEPA dP*[104]	M-MW-J-0021 SH1[34]
PDI-4109	J-JZ-J-00997, *SWPF PDI-4109 PB FLT-002 Primary HEPA dP*[105]	M-MW-J-0021 SH1[34]
PI-4093	J-JZ-J-00929, *SWPF PI-4093 HRS Return Pressure*[106]	M-MW-J-0005[226]
RI-4015	J-JZ-J-00988, *SWPF RI-4015 Process Vessel Dark Cell Exhaust CAM*[107]	M-MW-J-0021 SH1[34]
RI-4059	J-JZ-J-00985, *SWPF RI-4059 South ASP & CSSX Corridor & Labyrinths CAM*[108]	M-MW-J-0019[33]
RI-4121	J-JZ-J-01010, *SWPF RI-4121 Exhaust Stack CAM*[109]	M-MW-J-0021 SH2[35]
SIC-4079A	J-JZ-J-01330, *SWPF SIC-4079A PB Exhaust FAN-001 Speed*[111]	M-MW-J-0021 SH2[35]
SIC-4079B	J-JZ-J-01331, *SWPF SIC-4079B PB Exhaust FAN-002 Speed*[112]	M-MW-J-0021 SH2[35]

Table 3-5. PBVS Instrumentation (cont.)

Initiator Tag	Alarm Setpoint Document	Drawing
SIC-4105A	J-JZ-J-01328, *SWPF SIC-4105A HRS P-007A Speed*[113]	M-MW-J-0005[226]
SIC-4105B	J-JZ-J-01329, *SWPF SIC-4105B HRS P-007B Speed*[114]	M-MW-J-0005[226]
TI-4004	J-JZ-J-00973, *SWPF TI-4004 SSFT Cell Exhaust Air Temp*[115]	M-MW-J-0017[31]
TI-4014	J-JZ-J-00978, *SWPF TI-4014 SEHT Cell Exhaust Air Temp*[116]	M-MW-J-0018[32]
TI-4021	J-JZ-J-00963, *SWPF TI-4021 FFT-A Cell Exhaust Air Temp*[117]	M-MW-J-0015[29]
TI-4034	J-JZ-J-00958, *SWPF TI-4034 AST-A Cell Exhaust Air Temp*[118]	M-MW-J-0014[28]
TI-4044	J-JZ-J-00923, *SWPF TI-4044 ASDT Cell Exhaust Air Temperature*[119]	M-MW-J-00033[36]
TI-4054	J-JZ-J-00968, *SWPF TI-4054 SSRT/WWHT Cell Exhaust Air Temp*[120]	M-MW-J-0016[30]
TI-4058	J-JZ-J-00983, *SWPF TI-4058 East CSSX TK Cell Exhaust Air Temp*[121]	M-MW-J-0019[33]
TI-4064	J-JZ-J-00984, *SWPF TI-4064 West CSSX TK Cell Exhaust Air Temp*[122]	M-MW-J-0019[33]
TIC-4069	J-JZ-J-00932, *SWPF, TIC-4069 Mechanical Room Temp*[123]	M-MW-J-0006[21]
TIC-4083	J-JZ-J-00942, *SWPF TIC-4083 DOE Office Temp*[124]	M-MW-J-0008[22]
TIC-4086	J-JZ-J-00949, *SWPF TIC-4086 Operating Deck Temp*[125]	M-MW-J-0012[26]
TIC-4088	J-JZ-J-00947, *SWPF TIC-4088 Process Building Exhaust Fan Room Temp*[126]	M-MW-J-0011[25]
TIC-4096	J-JZ-J-00946, *SWPF TIC-4096 Organic Lab Temp*[127]	M-MW-J-0010[24]
TIC-4097	J-JZ-J-00943, *SWPF TIC-4097 Calibration Room Temp*[128]	M-MW-J-0009[23]
TIC-4098	J-JZ-J-00944, *SWPF TIC-4098 Truck Bay Temp*[129]	M-MW-J-0009[23]
TIC-4100A	J-JZ-J-00900, *SWPF TIC-4100A Dark Cell Exhaust Temp*[130]	M-MW-J-0002[18]
TIC-4100B	J-JZ-J-00901, *SWPF TIC-4100B Occupied Spaces Temp*[131]	M-MW-J-0002[18]

Table 3-5. PBVS Instrumentation (cont.)

Initiator Tag	Alarm Setpoint Document	Drawing
TIC-6054	J-JZ-J-00939, *SWPF TIC-6054 Cold Chemicals Work Area Temp*[132]	M-MW-J-0007[43]
TIC-6065	J-JZ-J-00940, *SWPF TIC-6065 CCA Operator Station Temp*[133]	M-MW-J-0007[43]

3.3.5.2 Control Functions

The PBVS is controlled and monitored through the DCS. Remote control of the system is provided from the CR and SSP. Local control capability for startup, testing, maintenance, and emergencies is also provided. The PBVS is required to operate only during normal operations.

The DCS system monitors temperatures, pressures, flow rates, component status, and radioactivity levels in the exhaust air to determine the status of the system and its ability to accomplish required functions. The DCS will provide automatic switching of control to a back-up component or train, if a failure is detected in the operating equipment. The PBVS is provided with redundant components or trains for the major equipment.

- The PBVS exhaust fans are controlled based on the position of the most open cell outlet flow control damper.
- Pressure control dampers located in the inlet ducts to the Process Cells and CSSX Tank Cells modulate to maintain the required space pressure.
- Electric duct heaters are prevented from operation when less than two AHUs are operating.

3.4 Operations

3.4.1 Initial Configuration

Prior to startup of the supply and exhaust portions of the PBVS, the outside air inlet bypass damper is open when all three supply AHUs are off. The water supply to the supply AHU cooling coils is isolated.

3.4.2 System Startup

On a signal to start the PBVS, the DCS starts whichever of the two exhaust fans (FAN-001 or -002) is selected by the Operator to provide the required negative atmospheric pressure in the process areas. The general DCS starting order for the PBVS is as follows:

1. Start FAN-001 or -002, while simultaneously modulating the flow and pressure dampers of the air system;
2. Supply AHU cooling coil set point establishment (as needed);

3. Start two of the supply AHU fans; and
4. Local electric heating coil operation (as needed) by zone.

3.4.3 Normal Operations

During normal operations, two of the three supply AHU fans run continuously. The supply air flow control damper maintains a constant volume of air supply to the Process Building. The supply air damper is controlled by the DCS, which also controls the positioning of all other flow control dampers in the Process Building. Two of the three AHUs will run at any given time, and the third AHU will remain on standby and is cycled periodically to manage run time for all three AHUs.

One of the two PBVS exhaust fans runs continuously during normal operation. The exhaust HEPA filter train is in service. The second exhaust fan is on standby and is cycled periodically to manage run time for both fans.

Refer to 15940[5], for a detailed description.

3.4.4 Off-Normal and Recovery Operation

In the event of loss of normal electrical power, the operating PBVS supply AHUs will stop running and the outside air bypass damper will open to provide a flow path for outside air to the Process Building. The exhaust fans are powered from the Standby DG and will be automatically restarted following a loss of normal power to maintain the negative pressure in the zoned areas of the Process Building. The fan will operate based on maintaining the pressure set point in the Zone 2 areas.

3.4.5 System Shutdown

For system shutdown, the two supply AHU fans are turned off; the cooling water control valves to the AHU cooling coils are closed; the control valves to the AHU heat recovery coils are closed, and both exhaust fans are off. Individual electric heating coils will be secured via the DCS.

4.0 ALPHA FINISHING FACILITY HVAC SYSTEM

The AFF is provided with an independent HVAC System. The AFF HVAC System supplies outside conditioned air to the AFF. Exhaust air from the AFF is filtered through HEPA filters and then discharged by exhaust fans to the Exhaust Stack.

The process vessels located in the AFF are passively vented into the exhaust duct through a Demister and HEPA filter. The air from the process vessels is then filtered and exhausted to the atmosphere by the AFF HVAC System exhaust fans.

4.1 System Functions

The AFF HVAC System provides confinement for the potential release of radioactive material in the AFF. To accomplish this function, the AFF HVAC System maintains a cascading air flow from normally occupied non-contaminated areas (non-zoned and Zone 3) to potentially contaminated areas of the AFF (Zone 2). The AFF does not contain any Zone 1 areas. The AFF Process Area and the HEPA Filter Room are designated as Zone 2 areas. The personnel access/Airlock is designated as a Zone 3 area. The AFF AHU Room is designated as a non-zoned area. The AFF HVAC System exhaust fans draw air from the Zone 2 areas of the AFF. The resulting negative pressure in the Zone 2 areas cause the transfer of air from the Zone 3 and non-zoned areas to the Zone 2 areas. The transfer of air is accomplished through ductwork. The AFF HVAC System exhaust fans maintain the Zone 2 areas of the AFF at a negative pressure, with respect to the Zone 3 areas. The exhaust fans maintain the Zone 3 areas at a negative pressure, with respect to the atmosphere. The Zone 2 areas are maintained at a negative pressure of nominal -0.30 inches w.g. and the Zone 3 areas are maintained at a negative pressure of nominal -0.15 inches w.g. by the AFF HVAC System.

The AFF HVAC System exhaust provides a filtered pathway for airborne radioactive material that may be present in the AFF. This portion of the system is credited with preventing an unfiltered release to the environment resulting from operational upset conditions or equipment failure due to non-NPH events. To mitigate the consequences of these events, the AFF HVAC System exhaust is classified as SS. Because the unmitigated consequences to a co-located worker from a spill or fire in the AFF caused by an NPH event are low, the AFF HVAC System exhaust is classified as PC-1 for NPH events.

In addition to the confinement function, the AFF HVAC System provides filtered and conditioned outside air to the AFF. The supply air from the AFF HVAC System provides ventilation, heating, and cooling of the areas inside the AFF as required for occupation and to support equipment and process operation. The supply air flow is balanced with the exhaust air flow to maintain the required dPs throughout the AFF.

The AFF process tank headspace air is passively vented to the AFF exhaust duct to allow for variations in headspace volume during liquid transfers and daily barometric pressure changes. The vented air is routed through a demister to remove any entrained water droplets and a HEPA filter unit prior to entering the AFF exhaust duct.

4.2 Operational Overview

The AFF HVAC System provides outside air to the AFF. Outside air is drawn in through one 100%-capacity AHU (AHU-006). The outside air is filtered and tempered as necessary by the AHU prior to being discharged to the distribution ductwork. The cascaded flow through the AFF is balanced by a series of manual and automatic dampers. The ductwork and dampers separate the AFF into a “non-zoned” area and two zoned areas of successively less relative (negative) pressure.

The AFF HVAC exhaust fans draw exhaust air through HEPA filters and provide the negative air pressures for the AFF. The AFF HVAC System contains two 100%-capacity exhaust fans (FAN-005 and -006) and one 120%-capacity, two stage, exhaust HEPA filter assembly. One exhaust fan is normally operating, with the second on standby. The standby fan will automatically start in the event of failure of the operating fan. The fans discharge the filtered exhaust air through ductwork into the Exhaust Stack.

The AFF HVAC System is operated continuously in order to maintain the required pressure zone balance and confinement of radioactive material. The AFF HVAC System is designed with sufficient redundancy to allow for single component failure and the removal of operating components from service for normal maintenance and testing, without interrupting the safety function of the AFF HVAC System.

4.3 Configuration Information

4.3.1 Description of System

Schematics of the AFF HVAC System are shown in Figure 2-1 and Figure 2-3.

Exhaust air is treated by two stages of HEPA filters prior to being exhausted by the AFF HVAC System exhaust fans to the Exhaust Stack. Emissions from the Exhaust Stack are monitored by in-line radiation monitors to detect any potential releases of radioactive material.

The AFF HVAC System also maintains AFF temperatures for worker comfort, to remove process and equipment heat loads, and to prevent process upsets due to excessive temperature or freezing. The outside air is filtered by the AFF HVAC System supply AHU to remove dust. The AHU also provides heating or cooling of the supply air, as necessary, to control the temperature and humidity of the air in the AFF.

Supply air to the AFF areas is supplied from the outside by the AFF HVAC System supply AHU. The outside air is supplied to the non-zoned areas (AFF AHU Room and AFF Electrical Room), the Zone 3 areas (AFF Personnel Access/Airlock), and the Zone 2 areas (AFF HEPA Filter Room and AFF Process Vessel Area) by the single 100%-capacity AFF supply AHU (AHU-006). The AHU is rated to supply 28,440 cfm of outside air flow.

An outside air louver with a bird screen provides air intake to the supply AHU. The AHU includes a roughing pre-filter, an 85%-efficiency particulate filter, an electrical heating element, a chilled water cooling coil, and a centrifugal supply fan. An automatic flow control damper is provided on the AHU discharge duct to maintain a constant air flow rate from the AHU.

An automatic bypass damper, HCD-4163, is provided that will open if the AHU fails. This damper is located in ductwork connected to a dedicated outside air louver and will provide a flow path around the AFF supply AHU in the event of AHU failure. This feature provides a means of supplying outside air to the AFF during unavailability of the normal flow path. The bypass duct also contains an electric heater to provide heating of the outside air, if necessary.

The exhaust air from the Zone 2 areas is drawn through HEPA filtration units by the AFF HVAC System exhaust fans. The AFF HVAC System contains one 120%-capacity HEPA filtration train. The AFF exhaust filter train consists of a single filter housing (FLT-007). The filter housing is designed to handle 120% of the total exhaust flow. The filter housing contains a roughing pre-filter and two stages of HEPA filters in series. The HEPA filters have an efficiency for particulate removal of 99.97% at 0.3-micron particle size. The filter housing is stainless steel and is designed with bag-in/bag-out capability for filter replacement. Any one-sixth of the housing may be isolated for filter change out.

The AFF HVAC System contains two 100%-capacity centrifugal exhaust fans (FAN-005 and -006). One fan is normally in operation, with the second fan on standby. If the operating fan cannot maintain flow, the standby fan will automatically start. Each fan is capable of supplying the required flow rate of the exhaust air (29,370 cfm) from the AFF. The exhaust fans are driven by a VFD-controlled motor. The exhaust fans are centrifugal fans with heavy-gauge steel casings. Manual dampers are provided at the inlet and outlet of each fan to allow isolation of the fan, if necessary.

The AFF exhaust header is ducted to the Exhaust Stack for discharge to the atmosphere.

The process vessels located in the AFF are passively ventilated into the main process exhaust system through a HEPA filter (FLT-207) which includes a Demister. A schematic of the AFF vessel ventilation system is shown in Figure 2-4.

The AFF HVAC System Air Flow and Control Diagrams and Piping and Instrument Diagrams (P&IDs) are shown on Table 4-1.

Table 4-1. AFF HVAC Air Flow and Control Diagrams, Piping and Instrumentation Diagrams

Diagram Number	Diagram Title
M-MW-J-0023	*SWPF Process Building Alpha Finishing Facility Air Flow and Control Diagram (U)9*[134]
M-MW-J-0001	*SWPF Process Building HVAC Composite Flow Diagram (U)*[17]
M-M6-J-0141	*SWPF Alpha Finishing Facility Process Vessel Vent System P&ID (U)*[135]
M-MW-J-0013	*SWPF Process Building Building Supply Air Central Process Pump and Valve Galleries and Support Areas Air Flow and Control Diagram (U)*[27]

4.3.2 Major Components

The AFF HVAC System consists of the following major components listed in Table 4-2.:

Table 4-2. AFF HVAC Major Components

Component	Description
AHU-006	The AHU includes a roughing pre-filter, an 85%-efficiency particulate filter, an electric heating element, a chilled water cooling coil, and a centrifugal supply fan. The AHU is rated to supply 28,440 cfm of air flow. The supply fan is rated at 30 hp. The electric heating element is rated at 345 kW
	Two inlet outside air louvers, each equipped with bird screens
FCD-4164	Pneumatic operated discharge open/closed Flow Control Dampers, on the discharge of the AHU
HCD-4163	Outside air bypass duct that contains a normally closed automatic damper
EHC-009	150-kW Electric Duct Heater
FAN-005 and FAN-006	Main exhaust fans - The exhaust fans are centrifugal fans with heavy-gauge steel casings. The fans are driven by a VFD-controlled motor. Each fan motor is rated at 100 hp and is capable of providing 29,370 cfm of air flow
FLT-007	One exhaust HEPA filter assembly - The filter assembly contains a roughing pre-filter and two stages of HEPA filters in series. The HEPA filters have a particulate removal efficiency of 99.97% at 0.3-micron particulate size. The filter housing is stainless steel and is designed with bag-in/bag-out capability for filter replacement. The filter unit is capable of passing 100% of the required air flow (29,370 cfm) with one-sixth isolated from the air stream.

4.3.3 Stream Data

The AFF HVAC system is a single pass-through system that uses 100% outside air.

4.3.4 Physical Location and Layout

The AFF HVAC System exhaust fans are located outside the AFF building on a concrete pad located near the southeast corner of the building. The AFF AHU is located in the AFF AHU Room (R145) located on the south end of the AFF at elevation 100'. The AFF exhaust HEPA filter unit is located in the AFF HEPA Filtration Room (R146) located in the southern portion of the AFF at the 100' level.

4.3.5 System Control Features and Interlocks

4.3.5.1 System Monitoring

The AFF supply AHU is monitored for status (on/off), dP across the filters, and discharge air flow rate. The AFF exhaust fans are monitored for pressure on the inlet side of the fan and fan speed. The total exhaust flow rate is also monitored. The AFF exhaust HEPA filter housing is

monitored for dP across each of the filters. The pressure and temperature in the AFF Process Vessel Area are monitored.

See Table 4-3 for a listing of instruments.

Table 4-3. AFF HVAC Instrumentation

Initiator Tag	Alarm Setpoint Document	Drawing
FIC-4170	J-JZ-J-01021, *SWPF FIC-4170 AFF Exhaust Airflow*[136]	M-MW-J-0023[134]
PDI-4090	J-JZ-J-00950[76]	M-MW-J-0013[27]
PDI-4119	J-JZ-J-01022, *SWPF PDI-4119 AFF Exhaust FLT-007 Pre Filter dP* [137]	M-MW-J-0023[134]
PDI-4124	J-JZ-J-01023, *SWPF PDI-4124 AFF Exhaust FLT-007 Primary HEPA dP*[138]	M-MW-J-0023[134]
PDI-4161	J-JZ-J-01025, *SWPF PDI-4161 AFF AHU-006 Pre Filter dP*[139]	M-MW-J-0023[134]
PDI-4162	J-JZ-J-01026, *SWPF PDI-4162 AFF AHU-006 Final Filter dP*[140]	M-MW-J-0023[134]
PDI-4224	J-JZ-J-01024, *SWPF PDI-4224 AFF FLT-007 HEPA dP*[141]	M-MW-J-0023[134]
PDI-4241	J-JZ-J-00951[85]	M-MW-J-0013[27]
PDI-4242	J-JZ-J-00952[86]	M-MW-J-0013[27]
PI-4173	J-JZ-J-01028, *SWPF PI-4173 FAN-005 Vacuum*[142]	M-MW-J-0023[134]
PI-4174	J-JZ-J-01029, *SWPF PI-4174 FAN-006 Vacuum*[143]	M-MW-J-0023[134]
SIC-4170A	J-JZ-J-01339, *SWPF SIC-4170A AFF FAN-005 Speed*[144]	M-MW-J-0023[134]
SIC-4170B	J-JZ-J-01340, *SWPF SIC-4170B AFF FAN-006 Speed*[145]	M-MW-J-0023[134]
TIC-4165	J-JZ-J-01030, *SWPF TIC-4165 AFF Process Area Temp*[146]	M-MW-J-0023[134]
PDI-2254	J-JZ-J-01383, *SWPF PDI-2254 AFF PVVS Header dP*[147]	M-M6-J-0141[135]

4.3.5.2 Control Functions

The supply air provided by AHU-006 is controlled with a flow control damper (FCD-4164) on the discharge of the AHU.

A pressure control damper (PCD-4170) is located in the supply ductwork to the AFF Process Vessel Area. This damper is modulated by DCS to maintain air pressure inside the Process Vessel Area nominal -0.30 inch w.g.

The AFF exhaust fan VFD speed is controlled by the exhaust flow measured in the ductwork downstream of FAN-005 and FAN-006. The exhaust fans are each designed to provide a constant flow of 29,370 cfm through the HEPA filter housing (FLT-007), while maintaining the Process Vessel Area nominal -0.30 inch w.g.

4.4 Operations

4.4.1 Initial Configuration

Initial configuration of the AFF HVAC system is in a de-energized mode.

4.4.2 System Startup

The general DCS starting order for the AFF HVAC system is as follows:

1. Start FAN-005 or -006;
2. Start AHU-006;
3. Modulate control dampers for negative pressurization within Zone 2 and Zone 3; and
4. Energize electric heat coil or modulate chilled water control valve to maintain set point temperature in the AFF Process Vessel Area.

4.4.3 Normal Operations

During normal operation, the AFF supply AHU and exhaust fans are controlled automatically by the DCS. The AHU and exhaust fans are controlled to maintain the AFF Process Vessel Area temperature and relative pressure.

The AFF exhaust fan provides negative pressure in the AFF general process area. The AFF exhaust HEPA filter provides 29,370 cfm of air filtration. Operation of the two exhaust fans is rotated on a periodic basis, switching the former operational fan to standby for the next cycle. Air pressure within the AFF Process Vessel Area is controlled by DCS by modulation of a pressure control damper (PCD-4170) in the Process Vessel Area supply ductwork. If the AFF supply AHU is not operating, the DCS will open the outside air bypass damper and activate the heater in the bypass duct, as required.

Refer to 15940[5], for a detailed description.

4.4.4 Off-Normal and Recovery Operations

The VFDs of the exhaust fans will maintain the design airflow even as the dP across HEPA filter FLT-007 changes.

During loss of power, the outside air bypass damper (HCD-4163) fails closed.

4.4.5 System Shutdown

Automatic damper, FCD-4164 and chilled water control valve TV-4165 are designed to close. The outside air bypass damper HCD-4163 is designed to open.

5.0 CONTROL ROOM HVAC

The CR is provided with separate AHUs that operate independently of the PBVS supply and exhaust. The CR HVAC is intended to allow continued safe occupancy of the CR by operations personnel to remotely control and monitor the SWPF if the PBVS fails or the Process Building inlet air becomes contaminated from the airborne release of hazardous materials from the SWPF or an adjacent facility. The CR HVAC AHU inlets from the outside can be remotely closed from the CR to place the CR HVAC in a re-circulating mode. The CR HVAC System includes redundant AHUs and chilled water supplies. See Section 8.0 for details on the SSP Room.

5.1 System Functions

The CR HVAC is intended to allow continued safe occupancy of the CR in order to permit operations personnel to remotely control and monitor the SWPF in the event of the presence of airborne hazardous material in the Process Building inlet air from either an adjacent Savannah River Site (SRS) general area emergency (i.e., H- or S-Areas) or an SWPF emergency.

The current Safety Basis (SB) for the SWPF does not require any short-term post-accident Operator actions to mitigate the consequences of an accident or to maintain the SWPF in a safe shutdown condition. Based on this determination, the CR HVAC is not a safety-related system. Therefore, the CR HVAC is functionally classified as a General Service (GS) system and PC-1.

During normal plant operation, the CR HVAC System refreshes the CR air with outside air, filters the supply air, and conditions the air for temperature and humidity.

5.2 Operational Overview

This system has redundant 100%-capacity AHUs (AHU-004 and -005). One AHU is normally in operation, with the second on standby. The AHU cooling coils are supplied with chilled water from dedicated chillers (CHU-003A/B). The AHUs draw outside air and mix it with re-circulated air from the CR office complex. The mixed air is filtered and tempered as necessary by the AHUs prior to being discharged to the CR air distribution ductwork. The use of outside air mixed with re-circulated air allows the CR HVAC System to maintain the CR office complex at

a slight positive pressure, with respect to the atmosphere. This ensures that any potentially contaminated air from surrounding areas does not enter the CR office complex.

If the outside air is contaminated with hazardous materials, the CR HVAC System can be isolated from the outside air supply and operate in a re-circulation-only mode. Dampers can be closed to isolate the AHUs from the outside air supply. The AHUs then draw only re-circulated air from the CR office complex; filter and condition the air; and return the air to the CR office complex.

5.3 Configuration Information

5.3.1 Description of System

The CR HVAC System provides filtration, cooling, and heating of the air in the CR office complex as necessary to support human occupancy and equipment operation. During normal operation, the CR HVAC System operates by using make-up air from outside the facility that is mixed with re-circulated air from inside the CR office complex. The CR HVAC System can also operate in full re-circulation mode with no outside air input. This capability allows CR occupancy if the outside air is contaminated by hazardous materials due to an accidental release either at an adjacent SRS facility or from the SWPF. The CR HVAC System maintains the pressure inside the CR office complex positive, with respect to the atmosphere, to ensure that any contamination in adjacent areas does not enter the complex. A schematic of the CR HVAC System is shown in Figure 2-5.

The CR office complex that is provided with ventilation by the CR HVAC System includes the CR (R116), CR access area (R116A), shift supervisors office (R117), Men's/Women's toilets (R116B), Uninterruptible Power Supply (UPS) Room (R118A), and Information Technology (IT) Server Room (R118B). The Men's/Women's toilet has an exhaust fan (FAN-015) that operates continuously during normal operations.

The CR HVAC System consists of two 100%-capacity AHUs (AHU-004 and -005), each designed to filter, heat, and cool either a mixture of returned air and outside make-up air or 100% re-circulated air. One AHU is normally in operation, with the second on standby. The standby unit can be started remotely from inside the CR in the event of failure of the operating unit.

Outside air louvers with bird screens provide outside make-up air intake to the AHUs. Each AHU includes a roughing pre-filter, an 85%-efficiency particulate filter, an electric heating element, a chilled water cooling coil, and a centrifugal fan. Dampers are provided at the discharge of each AHU to isolate the unit and prevent backflow when the fan is idle. Two dedicated air-cooled chillers (CHU-003A/B) provide chilled water to the AHU cooling coils to provide cooling of the air, as necessary, to maintain required temperatures inside the CR office complex.

The CR AHUs refresh the CR office complex air with outside air, filter the air, and condition outside air for temperature and humidity. Outside air is mixed with return air before it is

conditioned as supply air to the CR office complex. The CR supply air is delivered by ductwork routed from the AHU to the CR office complex. A shut-off damper is located behind the air inlet louvers on each CR AHU (DMP-2202/2204). These dampers are closed during a forest fire, or when the outside air source is deemed to be contaminated in the event of a detectable radiation release or other design basis accident.

The CR HVAC System is shown in detail in the drawings listed in Table 5-1.

Table 5-1. CR HVAC System Drawings

Diagram Number	Diagram Title
P-PG-J-0005	*SWPF Process Building General Arrangements Northern Facility Support Area Plan at Elevation 100'-0" (U)*[148]
M-MW-J-0001	*SWPF Process Building HVAC Composite Flow Diagram (U)*[17]
M-MW-J-0022	*SWPF Process Building Control Room Air Flow and Control Diagram (U)*[149]
M-M6-J-0099	*SWPF Process Building Control Room Chiller Units CHU-003A/B P&ID (U)* [150]

5.3.2 Major Components

The CR HVAC System consists of the following major components listed in Table 5-2:

Table 5-2. CR HVAC Major Components

Component	Description
AHU-004 and AHU-005	Each AHU consists of a 100% redundant capacity roughing pre-filter, an 85%-efficiency particulate filter, an electric element heater, a chilled water cooling coil, and a centrifugal fan. The AHU fan is rated for 3,960 cfm and 7½ hp. The AHU electric heating element is rated at 6 kW
HCD-4156 and HCD-4157	Pneumatic operated outlet isolation dampers on the discharge of each AHU
HCD-4150 and HCD-4151	Pneumatic operated outside air isolation dampers, one for each AHU
	An exhaust fan with a backdraft damper and a fire damper for the restroom. The exhaust fan is rated at 100 cfm and 1/6 hp.

5.3.3 Stream Data

The CR is a re-circulating air treatment system that is supplied with some outside air, but the CR HVAC System has the capability to operate without outside air make-up.

5.3.4 Physical Location and Layout

The CR HVAC System AHUs (AHU-004 and -005) are physically located on the floor level within the Mechanical Room (R114) of the Process Building. The CR is located at the northwest side of the CPA.

5.3.5 System Control Features and Interlocks

5.3.5.1 System Monitoring

The CR HVAC AHUs are monitored for status (on/off), dP across the filters, and discharge air flow rate. Temperatures in the CR and UPS Room are monitored. Pressure in the CR is also monitored.

See Table 5-3 for a listing of instruments.

Table 5-3. CR HVAC Instrumentation

Initiator Tag	Alarm Setpoint Document	Drawing
FI-4158	J-JZ-J-01013, *SWPF FI-4158 CR Airflow*[151]	M-MW-J-0022[149]
PDI-4152	J-JZ-J-01014, *SWPF PDI-4152 CR AHU-004 Pre Filter dP*[152]	M-MW-J-0022[149]
PDI-4153	J-JZ-J-01015, *SWPF PDI-4153 CR AHU-005 Pre Filter dP*[153]	M-MW-J-0022[149]
PDI-4154	J-JZ-J-01016, *SWPF PDI-4154 CR AHU-004 Final Filter dP*[154]	M-MW-J-0022[149]
PDI-4155	J-JZ-J-01017, *SWPF PDI-4155 CR AHU-005 Final Filter dP*[155]	M-MW-J-0022[149]
PDI-4160	J-JZ-J-01018, *SWPF PDI-4160 Control Room Pressure*[156]	M-MW-J-0022[149]
TI-4317	J-JZ-J-01019, *SWPF TI-4317 UPS Room Temp*[157]	M-MW-J-0022[149]
TIC-4159	J-JZ-J-01336, *SWPF TIC-4159 IT Server Room Temperature*[158]	M-MW-J-0022[149]
TIC-4303	J-JZ-J-01337, *SWPF TIC-4303 Control Room Temperature*[159]	M-MW-J-0022[149]
TIC-4304	J-JZ-J-01338, *SWPF TIC-4304 Shift Supervisor Office Temperature*[160]	M-MW-J-0022[149]
FI-4275	J-JZ-J-00859, *SWPF FI-4275 Control Room Chilled Water Supply Flowrate*[161]	M-M6-J-0099[150]

Table 5-3. CR HVAC Instrumentation (cont.)

Initiator Tag	Alarm Setpoint Document	Drawing
PI-4261	J-JZ-J-00860, *SWPF PI-4261 Control Room Chilled Water Return Pressure*[162]	M-M6-J-0099[150]
TI-4279	J-JZ-J-00861, *SWPF TI-4279 Control Room Chilled Water Supply Temperature*[163]	M-M6-J-0099[150]

5.3.5.2 Control Functions

The CR HVAC AHUs are thermostatically controlled to maintain adequate heating or cooling of the office spaces in and around the CR area. The control temperature sensor is located in the CR for both heating and cooling. The temperature signal controls the flow of chilled water to the AHU cooling coils and operation of the in-line electrical resistance heater in the AHU to maintain required temperatures in the CR.

The UPS Room served by the CR HVAC System has a strict temperature band and the temperature is monitored and alarmed to protect the electronic equipment.

5.4 Operations

5.4.1 Initial Configuration

Initial configuration of the CR AHUs is in a de-energized mode. Both inlet and outlet dampers are in the closed position via the DCS. All electrical power and cooling water is secured.

5.4.2 System Startup

On a signal to start the system, the DCS starts the selected AHU. The general DCS starting order for the CR HVAC System is as follows:

1. Open the inlet and outlet dampers on the selected AHU,
2. Start the selected AHU, and
3. Energize the heater to raise temperature or establish the cooling coil set point.

5.4.3 Normal Operations

During normal operations, one of the two CR HVAC System AHUs operates continuously. Chilled water flow to the AHU cooling coil or operation of the electric heater in the AHU is controlled, based on the temperature in the CR.

The operation of AHUs is rotated on a periodic basis. The system is controlled and monitored through the DCS, with local control capability for startup, testing, maintenance, and emergency events. Remote control and monitoring are available from the CR and SSP.

Refer to 15940[5], for a detailed description.

5.4.4 Off-Normal and Recovery Operation

Upon DCS signal for re-circulation of the CR air due to a general area emergency (e.g., radiological release), both AHUs have pneumatic dampers to seal off any potential harmful air or vapor from the outside air to the return air. The exhaust air exiting the Men's/Women's toilets is also manually secured by de-energizing the exhaust fan.

5.4.5 System Shutdown

The system is not normally shut down.

6.0 PROCESS VESSEL VENTILATION SYSTEM

The function of the PVVS is to mitigate buildup of flammable vapor in the headspace of the process vessels and contactors. Headspace ventilation lowers flammable gas concentration, thus mitigating the potential to exceed the composite lower flammability limit (CLFL) in the headspace.

The PVVS exhausts air from the headspace of the process vessels and contactors. This process maintains a negative pressure in the headspace, relative to the room/cell pressure. The pressure differential promotes the flow of room/cell air through the headspace and out the PVVS. The air flow sweeps flammable vapors from the headspace, maintaining the flammable vapor concentration in the headspace below CLFL. The vented air is cooled to condense vapors and then filtered to remove any particulates prior to being combined with the PBVS exhaust and released to the atmosphere through the Exhaust Stack.

6.1 System Functions

The PVVS performs two functions. It minimizes the spread of radioactive contamination from the tanks by maintaining the tank headspace at a negative pressure, compared to the surrounding cell, and removing radioactive contamination from the airstreams prior to exhausting it to the stack. The PVVS also maintains the vapor space of the tanks well below flammable conditions during normal operations and off-normal conditions by removing flammable gases (e.g., hydrogen, organics).

The PVVS ensures that non-negligible airborne releases from non-NPH events involving the process vessels or contactors are not allowed to exit the CPA without being filtered. To accomplish this function, the PVVS is credited with maintaining a filtered pathway for the exhaust air and the PVVS exhaust filter pathway from process vessels, small tanks, contactors, and from Zone 2 areas of the Process Building. In addition, to alert the Operator in the event of

failure of the PVVS, the Loss-of-PVVS-Alarm is classified as SS and PC-1. The alarm initiates actions by the Operators to restore flow or take alternative measures in the event of loss of PVVS flow.

6.2 Operational Overview

The PVVS provides air flow through the headspaces of the process vessels and contactors to maintain the flammable vapor concentration in the headspaces below the CLFL. The PVVS draws air and gases from the headspace to create a negative pressure in the headspace, with respect to the Process Cell/room. Make-up air is provided to the headspace by the purge air system and from the Plant Air System through air bubbler level detectors. Vents from the Process Cells to the process vessel headspaces also provide air flow from the Process Cells to the process vessels. Air flow through the headspace sweeps flammable vapors (released to the headspace from the process liquid) from the headspace. This maintains the flammable vapor concentration below the CLFL.

Exhaust gas from the headspaces is treated and filtered by the PVVS before it is released to the atmosphere through the Exhaust Stack. The PVVS includes redundant 100%-capacity exhaust air treatment systems. Each air treatment train includes a cooler, demister, heater, and pre-filter, as well as two stages of HEPA filters. One filter train is normally in operation, with the second on standby. In the event of failure of the operating filter train, the standby filter train will be automatically aligned. Each filtration subsystem is served by redundant 100%-capacity exhaust fans (FAN-401A and -401B). One exhaust fan is operating, with the second on standby. The standby fan will automatically start in the event of failure of the operating fan. Exhaust fans discharge into the Process Building exhaust header, which leads to the facility Exhaust Stack (STK-001).

The PVVS is operated continuously in order to maintain the process vessel and contactor headspaces below CLFL and provide confinement of radioactive material. The PVVS is designed with sufficient redundancy to allow for single component failure and the removal of components from service for normal maintenance and testing without interrupting the safety function of the PVVS.

6.3 Configuration Information

6.3.1 Description of System

The PVVS exhausts air from the process vessels and contactors to prevent buildup of flammable vapors in the headspace from reaching CLFL and provide confinement of radioactive materials. A schematic of the PVVS is shown in Figure 2-6. The PVVS is an active system that draws air through the vapor space of the process vessels and contactors that may contain radioactive material. Exhaust air is drawn from the process vessels and contactors by one of two 100%-capacity PVVS exhaust fans. The PVVS maintains a nominal negative pressure of -12 inches w.g. at the Pressure Indicator Transmitter, near the demisters, relative to the atmosphere. Make-up air is provided to the process vessels and contactors from the purge air system and from

the Plant Air System through air bubbler level detectors. The negative pressure maintained in the process vessels also allows air from the Process Cell to be pulled into the headspace through the vessel orifices. Air flow through the process vessels and contactors provides sweeping of flammable gases released from the process liquid from the headspace and prevents the accumulation of flammable gas concentration to flammable or explosive levels.

Exhaust air from the process vessels and contactors is treated by two stages of HEPA filters prior to being exhausted by the PVVS exhaust fans to the Exhaust Stack. This prevents the unfiltered release of radioactive material from the process vessels and contactors to the atmosphere.

The PVVS provides flammable gas control and ventilation to the process vessels and contactors listed in Table 6-1. TK-201, TK-202, TK-208, and TK-217 contactor vent headers do not have an orifice and sweep is accomplished using Air Dilution System (ADS).

Table 6-1. Process Vessels and Contactors Served by PVVS

Tank/Equipment Number	Tank/Equipment Function
TK-101	Alpha Sorption Tank-A (AST-A)
TK-102	Filter Feed Tank-A (FFT-A)
TK-103	Cleaning Solution Dump Tank-A
TK-104	Sludge Solids Receipt Tank (SSRT)
TK-105	Wash Water Hold Tank (WWHT)
TK-109	Salt Solution Feed Tank (SSFT)
TK-127	Spent Acid Storage Tank
TK-201	Decontaminated Salt Solution (DSS) Coalescer
TK-202	Solvent Hold Tank
TK-203	Strip Effluent Coalescer
TK-204	Caustic Wash Tank
TK-205	Strip Effluent Hold Tank (SEHT)
TK-206	Barium-137 Decay Tank
TK-208	Solvent Drain Tank (SDT)
TK-211	DSS Stilling Tank
TK-212	Strip Effluent Stilling Tank
TK-215	Strip Effluent Pump Tank
TK-217	Solvent Strip Feed Tank
TK-235	Lab Drain Tank
TK-601	Alpha Sorption Drain Tank (ASDT)
EXT-201-A-P	Solvent Extraction Contactors
EXT-202-A/B	Scrub Contactors
EXT-204 A/B	Caustic Wash Contactor
EXT-203 A-P	Stripping Contactors

Air is drawn out of the process vessel and contactor headspaces by the PVVS exhaust fans. The negative pressure in the PVVS header is maintained by variation of the speed of the operating exhaust fan Some rapid and limited fluctuations are expected due to operation of the pulse mixer systems, which cyclically displaces liquid from the tanks into and out of the pulse pots during normal operation..

Exhaust air from the process vessels and contactors is drawn through one of two 100%-capacity treatment/filtration units by the PVVS exhaust fans prior to its release to the atmosphere. One treatment/filtration unit is normally in operation, with the second on standby. Failure of the operating unit will result in its isolation and automatic alignment of the standby unit. Treatment/filtration unit operation is controlled by inlet and outlet automatic isolation valves on each of the units. Both valves are open on the operating unit and closed on the standby unit. In the event of failure of the operating unit, its isolation valves will close and the isolation valves on the standby unit will open, placing the standby unit in operation. Manual inlet and outlet isolation valves on each treatment/filtration unit are also provided to allow isolation of the unit, when necessary.

The treatment/filtration units recover any solvent that may be present in the exhaust air and filter any particulate radioactive material from the air stream. The inlet air to the treatment/filtration units is first cooled by a chilled water cooling coil (CCL-401A/B) to lower the dew point of the air (i.e., dehumidify). This process will condense much of the solvent and water vapor in the air stream. The cooled air is then ducted to a demister (DMST-401A/B) to remove any entrained solvent and water droplets. Any liquid removed from the air stream by the cooling coil or demister is drained to the Solvent Drain Tank (SDT) (TK-208) because the liquid may contain recovered solvent. The exhaust air is next ducted to an electrical heater unit (HTR-401 A/B) to raise the temperature of the flowing air mixture to evaporate any remaining liquid within the air stream.

The treated dry air is next ducted to the HEPA filtration units (FLT-401A/B). Each HEPA filtration unit consists of a roughing pre-filter to trap any large particles in the air stream and two stages of HEPA filtration to remove the fine particulates before the air is released to the atmosphere. The HEPA filters have particulate removal efficiency of 99.97% at 0.3-micron particle size. The filter housings are stainless steel and are designed with bag-in/bag-out capability for filter replacement.

The PVVS contains two 100%-capacity exhaust fans (FAN-401A/B). One fan is normally in operation, with the second on standby. Each fan is capable of supplying the required flow rate of the exhaust air (350 cfm) from the PVVS. The exhaust fans are driven by a VFD-controlled motor. The exhaust fans are centrifugal fans with heavy-gauge steel casings. An automatic damper (HCD-4190 and HCD-4193) is provided on the outlet of each fan. The automatic damper will close when its associated fan is not operating to prevent backflow through the idle fan. Manual dampers and valves are also provided on the inlet and outlet of each fan to allow for isolation of the fan.

The PVVS exhaust fans discharge into the PBVS exhaust header downstream of the PBVS exhaust fans and then to the Exhaust Stack and the atmosphere.

The PVVS components receive electrical power from the Standby Bus MCC.

The PVVS is shown in detail in the Air Flow Diagram and P&IDs listed in Table 6-2.

Table 6-2. PVVS Diagrams

Diagram Number	Diagram Title
M-MW-J-0021 SH2	*SWPF Process Building Exhaust Air Air Flow and Control Diagram (U)*[35]
M-M6-J-0199	*SWPF Process Building Process Vessel Vent Exhaust Fans –FAN-401A/B P&ID (U)*[164]
M-M6-J-0198	*SWPF Process Building Process Vessel Vent System P&ID (U)*[165]
M-M6-J-0087	*SWPF Process Building Process Vessel Vent System P&ID (U)*[166]
M-M6-J-0129	*SWPF Process Building Process Vessel Vent Header P&ID (U)*[167]
M-M6-J-0059 SH1	*SWPF Process Building Contactor Vent Header P&ID (U)*[168]
M-M6-J-0059 SH2	*SWPF Process Building Contactor Vent Header P&ID (U)*[169]

6.3.2 Major Components

The PVVS consists of the following major components listed in Table 6-3:

Table 6-3. PVVS Major Components

Component	Description
HV-4180A and HV-4185A	One pneumatic cylinder-operated inlet isolation valve on each treatment/ filtration unit
HV-4180B and HV-4185B	One pneumatic cylinder-operated outlet isolation valve on each treatment/ filtration unit
CCL-401A and CCL-401B	Chilled water cooling coil in each treatment/ filtration unit
TV-4189 and TV-4196	Pneumatic-operated control valve in each treatment/ filtration unit
DMST-401A and DMST-401B	Demister rated at 350 cfm flow in each treatment/ filtration unit
HTR-401A and HTR-401B	Electric element heater rated at 3 kW in each treatment/ filtration unit
FLT-401A and FLT-401B	HEPA filter housings - Each filter housing contains a roughing pre-filter and two stages of HEPA filters in series. The HEPA filters have a particulate removal efficiency of 99.97% at 0.3-micron particle size. The filter housings are stainless steel and are designed with bag-in/bag-out capability for filter replacement. Each filter housing is rated at 350 cfm of flow.
FAN-401A and FAN-401B	Two 100%-capacity exhaust fans. The exhaust fans are centrifugal fans with heavy-gauge steel casings, driven by VFD-controlled motors. Each fan motor is rated at 5 hp and is capable of supplying 350 cfm of flow at -30-inch w.g. static pressure.
HCD-4190 and HCD-4193	Pneumatic operated isolation damper located on the discharge of each fan

6.3.3 Stream Data

Waste streams from various tanks and other systems shown in Table 6-1 are drawn into the PVVS.

6.3.4 Physical Location and Layout

PVVS fans are located in the Process Building PVVS/PMVS Fan Room in the northeast end of the CPA on the 139-foot (ft) elevation. PVVS filters are located in the PVVS/PMVS and Laboratory Vent Room, north of the Operating Deck on the 139-ft elevation.

6.3.5 System Control Features and Interlocks

6.3.5.1 System Monitoring

The inlet air to the PVVS treatment/filtration units is monitored for pressure and temperature. The dP across the treatment/filtration units is monitored to allow determination of correct operation of the units. The outlet temperature of the cooling coils and heating element are monitored to verify correct operation of the units. The dP across each of the filters (pre-filter and two stages of HEPA filters) in the filter housing are monitored to verify their continued correct operation. Discharge air from the filter housing is monitored for radiation as an indication of filter breakthrough. The PVVS exhaust fans are monitored for dP across the fan and for fan speed.

See Table 6-4 for a listing of instruments.

Table 6-4. PVVS Instrumentation

Initiator Tag	Alarm Setpoint Document	Drawing
FI-4120	J-JZ-J-01006[41]	M-MW-J-0021 SH2[35]
FIC-4079	J-JZ-J-01007[53]	M-MW-J-0021 SH2[35]
PDI-4077	J-JZ-J-01008[73]	M-MW-J-0021 SH2[35]
RI-4121	J-JZ-J-01010[109]	M-MW-J-0021 SH2[35]
SIC-4079A	J-JZ-J-01330[111]	M-MW-J-0021 SH2[35]
SIC-4079B	J-JZ-J-01331[112]	M-MW-J-0021 SH2[35]
FI-4199	J-JZ-J-00582, *SWPF FI-4199 PVV Exhaust Airflow*[170]	M-M6-J-0199[164]
PDI-4183	J-JZ-J-00888, *SWPF PDI-4183 PVV Exhaust Fan A dP*[171]	M-M6-J-0199[164]
PDI-4188	J-JZ-J-00889, *SWPF PDI-4188 PVV Exhaust Fan B dP*[172]	M-M6-J-0199[164]
SIC-4199A	J-JZ-J-01315, *SWPF SIC-4199A PVVS FAN-401A Speed*[173]	M-M6-J-0199[164]

Table 6-4. PVVS Instrumentation (cont.)

Initiator Tag	Alarm Setpoint Document	Drawing
SIC-4199B	J-JZ-J-01316, *SWPF SIC-4199B PVVS FAN-401B Speed*[174]	M-M6-J-0199[164]
FIC-4199	J-JZ-J-00582[170]	M-M6-J-0199[164]
PDI-4197	J-JZ-J-00881, *SWPF PDI-4197 PVV Moisture Removal Train B dP*[175]	M-M6-J-0198[165]
PDI-4202	J-JZ-J-00882, *SWPF PDI-4202 PVV FLT-401B Pre Filter dP*[176]	M-M6-J-0198[165]
PDI-4203	J-JZ-J-00883, *SWPF PDI-4203 PVV FLT-401B Primary HEPA dP*[177]	M-M6-J-0198[165]
PDI-4204	J-JZ-J-00884, *SWPF PDI-4204 PVV FLT-401B HEPA dP*[178]	M-M6-J-0198[165]
RI-4187	J-JZ-J-00885, *SWPF RI-4187 PVV HEPA B Exhaust CAM*[179]	M-M6-J-0198[165]
TIC-4189	J-JZ-J-00886, *SWPF TIC-4189 PVV Cooler B Outlet Temp*[180]	M-M6-J-0198[165]
TIC-4192	J-JZ-J-00887, *SWPF TIC-4192 PVV Heater B Outlet Temp*[181]	M-M6-J-0198[165]
PDI-4167	J-JZ-J-00825, *SWPF PDI-4167 PVV FLT-401A Pre Filter dP*[182]	M-M6-J-0087[166]
PDI-4168	J-JZ-J-00826, *SWPF PDI-4168 PVV FLT-401A Primary HEPA dP*[183]	M-M6-J-0087[166]
PDI-4169	J-JZ-J-00827, *SWPF PDI-4169 PVV FLT-401A HEPA dP*[184]	M-M6-J-0087[166]
PDI-4194	J-JZ-J-00828, *SWPF PDI-4194 PVV Moisture Removal Train A dP*[185]	M-M6-J-0087[166]
PDIC-4191	J-JZ-J-00829, *SWPF PDIC-4191 PVV Header Vacuum*[186]	M-M6-J-0087[166]
RI-4182	J-JZ-J-00830, *SWPF RI-4182 PVV HEPA A Exhaust CAM*[187]	M-M6-J-0087[166]
TI-4184	J-JZ-J-00831, *SWPF TI-4184 PVV Cooler Inlet Temp*[188]	M-M6-J-0087[166]
TIC-4196	J-JZ-J-00832, *SWPF TIC-4196 PVV Cooler A Outlet Temp*[189]	M-M6-J-0087[166]
TIC-4198	J-JZ-J-00833, *SWPF TIC-4198 PVV Heater A Outlet Temp*[190]	M-M6-J-0087[166]

6.3.5.2 Control Functions

The PVVS is controlled and monitored through the DCS. Remote control of the system is provided from the CR and SSP. Local control capability for startup, testing, maintenance, and emergency operation is also provided. The PVVS is required to operate only during normal operations.

The DCS monitors temperatures, pressures, component status, and exhaust radioactivity levels to determine the status of the system and its ability to accomplish required functions. The DCS will provide automatic switching of control to the back-up components or trains, if a failure is

detected in the operating equipment. The PVVS is provided with redundant components for the major equipment.

The DCS will automatically control the flow of chilled water to the treatment/filtration unit cooling coils (CCL-401A/B) to drop the air temperature low enough to provide condensation of solvent and other liquids in the effluent air stream. The DCS will automatically control the electrical heating units (HTR-401A/B) to warm the air stream to prevent any free moisture reaching the HEPA filtration units.

The DCS will control the PVVS fans (FAN-401A/B) speed through their VFDs to provide a nominal -12 inch w.g. static pressure, relative to outside air.

6.4 Operations

6.4.1 Initial Configuration

Initial configuration of the process vessel vent fan and air treatment train is a de-energized mode. Both inlet and outlet pneumatic-operated dampers are in the open position. All electrical power and cooling water are secured.

6.4.2 System Startup

On a signal to start the air treatment system, the DCS starts an air treatment train. General DCS starting order for an air train is:

1. Inlet and outlet dampers on the air treatment train are verified opened,
2. Fan outlet isolation damper is gradually opened as fan is started and slowly ramped up in speed,
3. Heater energized to raise temperature to set point, and
4. Chilled water to the cooling coil established to lower temperature to set point.

6.4.3 Normal Operations

During normal PVVS operation, one of the two exhaust fans is operated to maintain the process vessels and contactor headspaces at negative pressure, relative to the cells/rooms. Operation of the two fan systems (FAN-401A and -401B) is rotated on a periodic basis, switching the former operational fan to standby for the next cycle. One of the two air treatment/filtration trains is normally in operation to treat and filter the process vessel and contactor headspace exhaust air and maintain the confinement function. Treatment/filtration train switchover is accomplished when the dP across the air filters (pre-filters and/or HEPA filters) reaches a pre-determined level. The system is controlled and monitored through the DCS, with local control capability for startup, testing, maintenance, and emergency events. Remote control and monitoring is available from the CR and SSP.

Refer to 15940[5], for a detailed description.

6.4.4 Off-Normal and Recovery Operation

In the event of loss of normal electric power, the PVVS components are powered from the Standby DG and will continue operating, preventing the build-up of flammable gas concentrations to the CLFL in the process vessels and contactors.

6.4.5 System Shutdown

This PVVS exhaust system is designed to operate continuously. A train of the PVVS exhaust system can be manually shut down by starting, and then ramping up, the standby exhaust system and then ramping down and then closing the inlet and outlet dampers of the train to be taken out of service. Control sensors will automatically shut down the chill water flow to the cooling coil and electrical power to the exhaust fan and the heating coil of the train that is out of service. Flush water to the demister is normally isolated, except for cleaning.

7.0 PULSE MIXER VENTILATION SYSTEM

The PMVS provides an exhaust vent pathway for the APAs. The PMVS fans create a lower pressure within the APAs than in the vessel to draw fluid into the APA to shorten refill time and improve mixing, especially during low tank liquid level conditions. The PMVS contains redundant filtration trains and exhaust fans, with a capability of automatic switchover to the standby filtration train or fan when the operating train or fan fails to function correctly. Each filtration train includes a cooler, demister, heater, pre-filter, and two stages of HEPA filters.

7.1 System Functions

The PMVS provides an exhaust vent for the APAs (i.e., pulse mixers). The APAs are located inside the process vessels with high solids concentrations to provide mixing of the process liquid. The APAs are pressurized by air from the Plant Air System to force liquid out of the APAs into the process vessel to mix the solids and liquid. The compressed air in the APAs is then vented to the PMVS and liquid re-enters the bottom opening of the APAs from the process vessel and the process is repeated.

The PMVS venting of the compressed air from the APAs allows the process liquid to quickly refill the APAs for the next cycle (i.e., pulse). The PMVS provides confinement of the compressed air pulse separate from the process tank headspace. The potentially contaminated air is drawn from the pulse mixers through a bank of HEPA filters to an air treatment/filtration train by the PMVS exhaust fan before exhausting the spent air to the Exhaust Stack.

The current SB for the SWPF does not credit operation of the APAs or the PMVS. Based on this determination, the PMVS is not a safety-related system.

7.2 Operational Overview

The PMVS provides an exhaust vent for the APAs. The PMVS draws air from the APAs to create a negative pressure in the APAs, relative to the pressure in the process vessel headspace, in order to draw process liquid from the vessel into the APA. The vent pathway to the PMVS is then isolated and compressed air from the Plant Air System is supplied to the APA to force the process liquid out of the APA and back into the process vessel. This operation provides mixing of the process liquid in the process vessel to ensure that the solid particles in the liquid do not settle out on the bottom of the tank.

Exhaust gas from the APAs is treated and filtered by the PMVS before it is released to the atmosphere through the Exhaust Stack. The PMVS includes redundant 100%-capacity exhaust air treatment/filtration systems. Each air treatment/filtration train includes a cooler, demister, heater, and pre-filter, as well as two stages of HEPA filters. One treatment/filtration train is normally in operation, with the second on standby. In the event of failure of the operating train, the standby treatment/filtration train will be automatically started. The treatment/filtration subsystem is served by redundant 100%-capacity exhaust fans (FAN-402A and -402B). The exhaust fans discharge into the Process Building exhaust header, which leads to the facility Exhaust Stack (STK-001).

The PMVS is operated continuously in order to support APA operation and provide confinement of radioactive material. The PMVS is designed with sufficient redundancy to allow for single component failure and the removal of components from service for normal maintenance and testing without interrupting the operation of the PMVS.

7.3 Configuration Information

7.3.1 Description of System

The PMVS is designed to provide an exhaust vent pathway for the APAs to support APA operation and provide confinement of the potentially contaminated APA exhaust air. A schematic of the PMVS is shown in Figure 2-7. The PMVS includes redundant exhaust air treatment/filtration trains. Each treatment/filtration train includes a cooler, demister, heater, pre-filter, and two stages of HEPA filters. Each air treatment/filtration train is served by redundant exhaust fans. The exhaust fans discharge into the process stack exhaust duct. Failure of the operating air treatment train or exhaust fan will result in automatic isolation of the failed air train and startup of the standby air treatment train and/or exhaust fan. Treatment and filtration of the APA exhaust air prevents an unfiltered release of potentially radioactive material from the process vessels to the atmosphere.

The PMVS provides exhaust venting from APAs located in the process vessels listed in Table 7-1.

Table 7-1. Pulse Mixer Ventilation System Vented Tanks

Tank Number	Tank Function
TK-101	AST-A
TK-102	FFT-A
TK-104	SSRT
TK-105	WWHT
TK-109	SSFT

Air is drawn out of the APAs by the PMVS exhaust fans, which maintain pressure in the PMVS exhaust header at -36 inches w.g. The negative pressure is maintained by variation of the speed of the operating exhaust fan. Some rapid and limited fluctuations in the header pressure are expected due to operation of the APAs, which cyclically displace liquid from the tanks into and out of the pulse pots during normal operation. Exhaust air from the APAs is drawn through one of two 100%-capacity treatment/filtration units by the PMVS exhaust fans prior to its release to the atmosphere. One treatment/filtration unit is normally in operation, with the second on standby. Failure of the operating unit will result in its isolation and automatic alignment of the standby unit. Treatment/filtration unit operation is controlled by inlet and outlet automatic isolation valves on each of the units. Both valves are open on the operating unit and closed on the standby unit. In the event of failure of the operating unit, its isolation valves will close and the isolation valves on the standby unit will open, placing the standby unit in operation. Manual inlet and outlet isolation valves on each treatment/ filtration unit are also provided to allow isolation of the unit, when necessary.

The treatment/filtration units filter any particulate radioactive material from the air stream. The inlet air to the treatment/filtration units is first cooled by a chilled water cooling coil (CCL-402A/B) to lower the dew point of the air (i.e., dehumidify). This process will condense much of the water vapor in the air stream. The cooled air is then ducted to a demister (DMST-402A/B) to remove any entrained water droplets. Any liquid removed from the air stream by the cooling coil or demister is drained to the ASDT (TK-601). The exhaust air is next ducted to an electrical heater unit (HTR-402 A/B) to raise the temperature of the flowing air mixture to evaporate any remaining liquid within the air stream to prevent damage to the downstream HEPA filters.

The treated dry air is next ducted to the HEPA filtration units (FLT-402A/B/C/D). Two 50%-capacity HEPA filtration units are provided in parallel in each of the treatment/filtration trains. Each HEPA filtration unit consists of a roughing pre-filter to trap any large particles in the air stream and two stages of HEPA filtration to remove fine particulates before the air is released

to the atmosphere. The HEPA filters have particulate removal efficiency of 99.97% at 0.3-micron particle size. The filter housings are stainless steel and are designed with bag-in/bag-out capability for filter replacement.

The PMVS contains two 100%-capacity exhaust fans (FAN-402A/B). One fan is normally in operation, with the second on standby. Each fan is capable of supplying the required flow rate of exhaust air (2,000 cfm) from the PMVS. The exhaust fans are driven by a VFD-controlled motor. The exhaust fans are centrifugal fans with heavy-gauge steel casings. An automatic damper (HCD-4144 and HCD-4148) is provided on the outlet of each fan. The automatic damper will close when its associated fan is not operating to prevent backflow through the idle fan. Manual dampers and valves are also provided on the inlet and outlet of each fan to allow for isolation of the fan.

The PMVS exhaust fans discharge into the PBVS exhaust header downstream of the PBVS exhaust fans and then to the Exhaust Stack and the atmosphere.

The PMVS components receive electrical power from the Standby Bus MCC.

The PMVS is shown in detail in the Air Flow Diagram and P&IDs listed in Table 7-2.

Table 7-2. PMVS Air Flow Diagrams and Piping and Instrumentation Diagrams

Diagram Number	Diagram Title
M-M6-J-0027 SH1	*SWPF Process Building Pulse Mixer Enclosure A P&ID* ***(U)***[191]
M-M6-J-0027 SH2	*SWPF Process Building Pulse Mixer Enclosure A P&ID* ***(U)***[192]
M-MW-J-0021 SH2	*SWPF Process Building Exhaust Air Air Flow and Control Diagram* ***(U)***[35]
M-M6-J-0187	*SWPF Process Building Pulse Mixer Vent System P&ID* ***(U)***[193]
M-M6-J-0188	*SWPF Process Building Pulse Mixer Vent Exhaust Fans Fan-402A/B P&ID* ***(U)***[194]
M-M6-J-0028 SH1	*SWPF Process Building Pulse Mixer Enclosure B P&ID* ***(U)***[195]
M-M6-J-0028 SH2	*SWPF Process Building Pulse Mixer Enclosure B P&ID* ***(U)***[196]
M-M6-J-0029	*SWPF Process Building Pulse Mixer Enclosure C P&ID* ***(U)***[197]
M-M6-J-0088	*SWPF Process Building Pulse Mixer Vent System P&ID* ***(U)***[198]

7.3.2 Major Components

The PMVS consists of the following major components listed in Table 7-3:

Table 7-3. PMVS Major Components

Component	Description
HV-4136A and HV-4137A	One pneumatic cylinder-operated inlet isolation valve on each treatment/ filtration unit
HV-4136B and HV-4137B	One pneumatic cylinder-operated outlet isolation valve on each treatment/ filtration unit
CCL-402A and CCL-402B	Chilled water cooling coil in each treatment/ filtration unit
TV-4149 and TV-4135	Pneumatic-operated control valve in each treatment/ filtration unit
DMST-402A and DMST-402B	Demister rated at 2,000 cfm flow in each treatment/ filtration unit
HTR-402A and HTR-402B	Electric element heater rated at 16.5 kW in each treatment/ filtration unit
FLT-402A, FLT-402B, FLT-402C, and FLT-402D	Four 50%-capacity HEPA filter assemblies, two in each treatment/ filtration train. Each filter assembly contains a roughing pre-filter and two stages of HEPA filters in series. The HEPA filters have a particulate removal efficiency of 99.97% at 0.3-micron particle size. The filter housings are stainless steel and designed with bag--in/bag- -out capability for filter replacement. The filter trains are rated to pass 2,000 cfm of flow.
FAN-402A and FAN-402B	Two 100%-capacity exhaust fans. The exhaust fans are centrifugal fans with heavy-gauge steel casings, driven by VFD-controlled motors. Each fan motor is rated at 50 hp and is capable of supplying 2,000 cfm of flow at -70-inch w.g. static pressure.
HCD-4144 and HCD-4148	Pneumatic operated isolation damper located on the discharge of each fan

7.3.3 Stream Data

The waste streams from process tanks shown in Table 7-1 and other systems are drawn into the PMVS. The general air stream for the PMVS is normal Plant Air, which may have the potential of being contaminated by the process liquid.

7.3.4 Physical Location and Layout

The PMVS fans are located in the Process Building PVVS/PMVS Fan Room in the northeast end of the CPA on the 139-ft elevation. PMVS filters are located in the PVVS/PMVS and Laboratory Vent Room, north of the Operating Deck on the 139-ft elevation.

7.3.5 System Control Features and Interlocks

7.3.5.1 System Monitoring

The inlet air to the PMVS treatment/filtration units is monitored for pressure and temperature. The dP across the treatment/filtration units is monitored to allow determination of correct operation of the units. The outlet temperature of the cooling coils and heating element are monitored to verify correct operation of the units. The dP across each of the filters (pre-filter and two stages of HEPA filters) in the filter assembly are monitored to verify their continued correct operation. Discharge air from the filter assembly is monitored for beta radiation as an indication of filter break-through. The PMVS exhaust fans are monitored for dP across the fan and for fan speed.

See Table 7-4 for a listing of instruments.

Table 7-4. PMVS Instrumentation

Initiator Tag	Alarm Setpoint Document	Drawing
FI-4120	J-JZ-J-01006[41]	M-MW-J-0021 SH2[35]
FIC-4079	J-JZ-J-01007[53]	M-MW-J-0021 SH2[35]
PDI-4077	J-JZ-J-01008[73]	M-MW-J-0021 SH2[35]
RI-4121	J-JZ-J-01010[109]	M-MW-J-0021 SH2[35]
SIC-4079A	J-JZ-J-01330[111]	M-MW-J-0021 SH2[35]
SIC-4079B	J-JZ-J-01331[112]	M-MW-J-0021 SH2[35]
PDI-4140	J-JZ-J-00869, *SWPF PDI-4140 PMV FLT-402C Primary HEPA dP*[199]	M-M6-J-0187[193]
PDI-4141	J-JZ-J-00871, *SWPF PDI-4141 PMV FLT-402C Secondary HEPA dP*[200]	M-M6-J-0187[193]
PDI-4145	J-JZ-J-00873, *SWPF PDI-4145 PMV FLT-402C Pre Filter dP*[201]	M-M6-J-0187[193]
PDI-4146	J-JZ-J-00874, *SWPF PDI-4146 PMV FLT-402D Pre filter dP*[202]	M-M6-J-0187[193]
PDI-4171	J-JZ-J-00875, *SWPF PDI-4171 PMV Moisture Removal train B dP*[203]	M-M6-J-0187[193]
PDI-4178	J-JZ-J-00870, *SWPF PDI-4178 PMV FLT-402D Primary HEPA dP*[204]	M-M6-J-0187[193]
PDI-4179	J-JZ-J-00872, *SWPF PDI-4179 PMV FLT-402D Secondary HEPA dP*[205]	M-M6-J-0187[193]
RI-4147	J-JZ-J-00876, *SWPF RI-4147 PMV HEPA C/D Exhaust CAM*[206]	M-M6-J-0187[193]

Table 7-4. PMVS Instrumentation (cont.)

Initiator Tag	Alarm Setpoint Document	Drawing
TIC-4138	J-JZ-J-00877, *SWPF TIC-4138 PMV Heater B Outlet Temp*[207]	M-M6-J-0187[193]
TIC-4149	J-JZ-J-00878, *SWPF TIC-4149 PMV Cooler B Outlet Temp*[208]	M-M6-J-0187[193]
PDI-4175	J-JZ-J-00879, *SWPF PDI-4175 PMV Exhaust Fan A dP*[209]	M-M6-J-0188[194]
PDI-4176	J-JZ-J-00880, *SWPF PDI-4176 PMV Exhaust Fan B dP*[210]	M-M6-J-0188[194]
SIC-4139A	J-JZ-J-01302, *SWPF SIC-4139A PMVS Fan-402A Speed*[211]	M-M6-J-0188[194]
SIC-4139B	J-JZ-J-01303, *SWPF SIC-4139B PMVS Fan-402B Speed*[212]	M-M6-J-0188[194]
LI-4525	J-JZ-J-00197, *SWPF LI-4525 Pulse Mixer Vent Heater Drain Loop Seal Level*[213]	M-M6-J-0029[197]
PDI-4115	J-JZ-J-00834, *SWPF PDI-4115 PMV FLT-402A Pre Filter dP*[214]	M-M6-J-0088[198]
PDI-4116	J-JZ-J-00835, *SWPF PDI-4116 PMV FLT-402A Primary HEPA dP*[215]	M-M6-J-0088[198]
PDI-4117	J-JZ-J-00836, *SWPF PDI-4117 PMV FLT-402A Secondary HEPA dP*[216]	M-M6-J-0088[198]
PDI-4172	J-JZ-J-00837, *SWPF PDI-4172 PMV Moisture Removal Train A dP*[217]	M-M6-J-0088[198]
PDI-4205	J-JZ-J-00838, *SWPF PDI-4205 PMV FLT-402B Pre Filter dP*[218]	M-M6-J-0088[198]
PDI-4206	J-JZ-J-00839, *SWPF PDI-4206 PMV FLT-402B Primary HEPA dP*[219]	M-M6-J-0088[198]
PDI-4207	J-JZ-J-00840, *SWPF PDI-4207 PMV FLT-402B Secondary HEPA dP*[220]	M-M6-J-0088[198]
PDIC-4139	J-JZ-J-00841, *SWPF PDIC-4139 PMV Header Vacuum*[221]	M-M6-J-0088[198]
RI-4142	J-JZ-J-00842, *SWPF RI-4142 PMV HEPA A/B Exhaust CAM*[222]	M-M6-J-0088[198]
TI-4177	J-JZ-J-00843, *SWPF TI-4177 PMV Cooler Inlet Temp*[223]	M-M6-J-0088[198]
TIC-4135	J-JZ-J-00844, *SWPF TIC-4135 PMV Cooler A Outlet Temp*[224]	M-M6-J-0088[198]
TIC-4143	J-JZ-J-00845, *SWPF TIC-4143 PMV Heater A Outlet Temp*[225]	M-M6-J-0088[198]

7.3.5.2 Control Functions

The PMVS is controlled and monitored through the DCS. Remote control of the system is provided from the CR and SSP. Local control capability for startup, testing, maintenance, and emergency operation is also provided. The PMVS is required to operate only during normal operations.

The DCS monitors temperatures, pressures, component status, and exhaust radioactivity levels to determine the status of the system and its ability to accomplish required functions. The DCS will provide automatic switching of control to the back-up components or trains if a failure is detected in the operating equipment. The PMVS is provided with redundant components for the major equipment.

The DCS will automatically control the flow of chilled water to the treatment/filtration unit cooling coils (CCL-402A/B) to drop the air temperature low enough to provide condensation of liquids in the effluent air stream. The DCS will automatically control the electrical heating units (HTR-402A/B) to warm the air stream to prevent any free moisture reaching the HEPA filtration units.

The DCS will control the PMVS fans (FAN-402A/B) speed through their VFDs to provide a nominal -36 inch w.g. static pressure in the PMVS header, relative to outside air.

7.4 Operations

7.4.1 Initial Configuration

Initial configuration of the PMVS fan and air treatment/filtration units is in a de-energized mode. Both the inlet and outlet pneumatic-operated dampers are in the closed position. All electrical power and cooling water are secured.

7.4.2 System Startup

On a signal to start the air treatment system, the DCS starts an air treatment train. General DCS starting order for an air train is:

1. Inlet isolation damper is opened and fan is started,
2. Outlet damper on the air treatment train is opened,
3. Heater energized to raise temperature to set point, and
4. Chilled water to the cooling coil established to lower temperature to set point.

7.4.3 Normal Operations

During normal PMVS operation, one of the two exhaust fans operates to maintain the APAs at negative pressure, relative to the process vessel. Operation of the two fan systems (FAN-402A and -402B) is rotated on a periodic basis, switching the former operational fan to standby for the next cycle. One of the two air treatment/filtration trains is normally in operation to treat and filter the APA exhaust air and maintain the confinement function. Treatment/filtration train switchover is accomplished when the dP across the air filters (pre-filters and/or HEPA filters) reaches a pre-determined level. The system is controlled and monitored through the DCS, with local control capability for startup, testing, maintenance, and emergency events. Remote control and monitoring are available from the CR and SSP.

Refer to 15940[5], for a detailed description.

7.4.4 Off-Normal and Recovery Operation

In the event of loss of normal electric power, the PMVS components are powered from the Standby DG and will continue operating.

7.4.5 System Shutdown

This PMVS exhaust system is designed to operate continuously. A train of the PMVS exhaust system can be manually shut down by first starting up the standby exhaust system and then closing the inlet and outlet dampers of the train to be taken out of service. Control sensors will automatically shut down the chill water flow to the cooling coil and electrical power to the exhaust fan and the heating coil of the train that is out of service. Flush water to the demister is normally isolated, except for cleaning.

8.0 CCA, COMPRESSOR BUILDING, AND SSP ROOM HVAC SYSTEMS

Separate HVAC systems are also provided for the CCA and Compressor Building. These systems are designed to provide general building ventilation and temperature control.

8.1 System Functions

CCA HVAC System – The CCA is served by an independent, dedicated HVAC supply and exhaust system that provides ventilation and temperature control. Fresh air is provided by two 50%-capacity AHUs. Air is exhausted by one of two redundant 100%-capacity roof-mounted fans. The AHUs can cool or heat the inlet fresh air to maintain required temperatures in the work area.

The CCA is comprised of a chemicals preparation and storage area, Electrical Room, AHU Room, Operator station with rest room, and laboratory. The CCA does not contain any radiological material. Because no radiological materials are present, the CCA HVAC System does not serve a confinement function. The current SB for the SWPF does not credit operation of the CCA HVAC System. Based on this determination, the CCA HVAC System is not a safety-related system.

Compressor Building HVAC System – The Compressor Building HVAC System provides heating and ventilation only. Cooling and conditioning of the supply air is not provided. The Compressor Building HVAC System consists of exhaust fans and inlet louvers. The exhaust fans draw ventilation air through the wall-mounted louvers and discharges it through roof-mounted exhaust fans. Electric unit heaters are provided to maintain minimum design temperatures in cold weather periods.

The current SB for the SWPF does not credit operation of the Compressor Building HVAC System. Based on this determination, the Compressor Building HVAC System is not a safety-related system.

SSP Room – The split ductless heat pump provided for the SSP Room provides temperature control only. None of the control or monitoring functions performed in the SSP Room are safety-related because the processes are designed to passively fail to a safe state during abnormal or upset conditions.

8.2 Operational Overview

CCA HVAC System – The CCA is served by an independent, dedicated HVAC supply and exhaust system. Fresh air is provided by two 50%-capacity AHUs (AHU-008 and -009). Exhaust is by one of two redundant 100%-capacity roof-mounted fans (FAN-003 and -004). The AHUs can cool or heat fresh air to maintain required temperatures in the work area. A supplemental heater provides additional heat for the Operator station and laboratory areas. The laboratory contains a fume hood with an exhaust fan that runs when the hood is in use.

Chemical tanks in the CCA are passively ventilated to their respective areas, except for the Nitric Acid Receipt Tank (TK-304) and the Filter Cleaning Acid Feed Tank (TK-106). The Nitric Acid Receipt Tank (TK-304) contains 20% by weight nitric acid (HNO_3). The Acid Feed Tank (TK-106) will normally contain 20% by weight HNO_3, but may contain 0.5M oxalic acid as a substitute cleaning acid. Both tanks are vented through the roof. The overflows for these tanks are equipped with a loop seal to prevent vapors entering the building.

Compressor Building HVAC System – The Compressor Building is heated and ventilated only; no air conditioning is provided. Outside ventilation air is drawn by two roof-mounted exhaust fans (FAN-011 and -012) in through two wall-mounted louvers (L1 and L2) equipped with an insect screen. Heating is provided by two electric unit heaters (HTR-001 and -002). Each heater is controlled individually by an integral thermostat to maintain minimum design temperature.

SSP Room – The SSP Room heat pump (ACU-001) provides cooling and heating. Fresh outside air enters the room when the door opens. The system consists of an inside heat exchanger unit with fan and filter and an outside heat exchanger with fan and compressor. The unit is controlled by a hand-held, battery powered remote control device.

8.3 Configuration Information

8.3.1 Description of System

CCA HVAC System – The CCA HVAC System provides outside conditioned air to the CCA and exhausts air from the CCA to the atmosphere. The CCA is comprised of a chemicals preparation and storage area, Electrical Room, Mechanical Room, CCA Operator Room, CCA Laboratory, AFF Operator Room, and CCA Storage Room and Restroom. The CCA HVAC System provides ventilation and temperature control of areas in the CCA to support human occupancy and equipment operation. Because no radioactive materials are present in the CCA, the CCA HVAC System does not perform a confinement function.

Supply air to the CCA is supplied from the outside by the CCA HVAC System supply AHUs (AHU-008 and -009). Outside air is drawn into the CCA by each AHU through outside air louvers with bird screens. The AHUs are both normally operating and each supplies 50% of the air flow for the CCA. Each AHU is rated to supply 9,380 cfm of air flow to the CCA. Each AHU includes a roughing pre-filter, an 85%-efficiency particulate filter, an electrical heating element, a chilled water cooling coil, and a centrifugal supply fan. Dampers are provided at the discharge of each AHU to control air flow from the AHU and isolate the associated AHU and prevent backflow when the supply fan is idle. Cooling coils in the AHUs are provided with chilled water from the plant CWS. From the outlet of the AHUs, supply air is distributed to various areas of the CCA by ductwork.

An electrical heating element (EHC-002) is provided in the supply ductwork to the normally occupied areas of the CCA (laboratory, laboratory storage room, CCA Operator Room, and AFF Operator Room). This element provides supplemental heating for the air supplied to these areas, as necessary, for human comfort during periods of cold outside air temperatures.

An automatic bypass damper (HCD-6057 and HCD-6060) is provided for each AHU. The bypass dampers are each located in ductwork connected to a dedicated outside air louver. The bypass damper will open if the associated AHU is not operating to provide a flow path for outside air into the CCA when the normal flow path is not available.

Air is exhausted from the CCA through redundant 100%-capacity roof-mounted upblast fans (FAN-003 and -004) with integral backdraft dampers. One fan is normally in operation, with the second in standby. Each fan is rated at 17,900 cfm of air flow.

A dedicated exhaust fan with an integral backdraft damper is supplied for the fume hood located in the Cold Chemicals Laboratory (FAN-013). This fan operates when the fume hood is in use and is rated at 1,500 cfm.

The rest room in the CCA also contains a dedicated exhaust fan (FAN-014) with an integral backdraft damper. This fan is rated at 80 cfm and operates continuously.

Note that, although the CCA HVAC System supplies inlet air to the AFF Operator Station, exhaust from the AFF Operator Station is through the AFF HVAC System.

The CCA HVAC System is shown in detail in the Air Flow and Control Diagram listed in Table 8-1.

Table 8-1. CCA HVAC System Air Flow and Control Diagram

Diagram Number	Diagram Title
M-MW-J-0007	*SWPF Process Building Cold Chemicals Area Air Flow and Control Diagram* ***(U)***[43]

Compressor Building HVAC System – The Compressor Building contains the Plant Air System compressors. The Compressor Building HVAC System provides heating and ventilation only to the Compressor Building; cooling is not provided. Because there is no radioactive material in the Compressor Building, the Compressor Building HVAC System does not perform a confinement function.

Outside ventilation air is provided to the Compressor Building by two wall-mounted, motorized louvers equipped with insect screens (L1 and L2). The outside air is drawn into the Compressor Building by two roof-mounted exhaust fans (FAN-011 and -012). The louvers and exhaust fans are thermostatically controlled to operate on increasing temperature.

Heating is provided in the Compressor Building by two electric unit heaters (HTR-001 and -002). Each heater is controlled by an integral thermostat to maintain minimum temperatures in the Compressor Building.

SSP Room – The SSP Room houses connections to shut down the processes, should the main CR become uninhabitable. The heat pump only provides cooling and heating depending on the temperature setting of the unit. Although part of the CPA structure, this room is accessible only from the outside. Outside air enters the room when the door opens. The unit is controlled by a hand-held, battery powered remote control device.

The SSP Room HVAC is shown in the Air Flow Diagram listed in Table 8-2.

Table 8-2. SSP Room HVAC Air Flow and Control Diagram

Diagram Number	Diagram Title
M-MW-J-0022	*SWPF Process Building Control Room Air Flow and Control Diagram* ***(U)***[149]

8.3.2 Major Components

CCA HVAC System – The CCA HVAC System consists of the following major components listed in Table 8-3:

Table 8-3. CCA HVAC System Components

Component	Description
AHU-008 and AHU-009	Two 50%-capacity supply air AHUs. Each AHU includes a roughing pre-filter, an 85%-efficiency particulate filter, an electrical heating element, a chilled water cooling coil, and a centrifugal exhaust fan. The centrifugal fans are rated at 9,380 cfm and 10 hp. The electrical heating elements are rated at 113 kW.
	Four inlet outside air louvers, each equipped with bird screens
EHC-002	Air supply electric heating element rated at 7 kW with a 460 V, 3-phase solid-state power controller and 4-20 milliamp direct current control signal.

Table 8-3. CCA HVAC System Components (cont.)

Component	Description
FAN-003 and FAN-004	Two roof-mounted exhaust fans with integral backdraft dampers, each rated at 17,900 cfm and 3 hp
FAN-013	Fume hood exhaust fan with integral backdraft damper, rated at 1,500 cfm and 1 hp.
FAN-014	Restroom exhaust fan with integral backdraft damper, rated at 80 cfm and ¼ hp.
FCD-6056 and FCD-6062	Pneumatic operated discharge flow control dampers, one for each supply AHU
HCD-6057 and HCD-6060	Pneumatic operated dampers, one in each AHU bypass line

Compressor Building HVAC System – The Compressor Building HVAC System consists of the following major components listed in Table 8-4:

Table 8-4. Compressor Building HVAC Major Components

Component	Description
FAN-011 and FAN-012	Two roof-mounted exhaust fans
L1 and L2	Two automatic operated dampers and wall-mounted louvers
HTR-001 and HTR-002	Two electric unit heaters

SSP Room HVAC System – The SSP Room HVAC System air-conditioning unit (ACU-001) is a split system heat pump and is rated at ¾ ton and consists of the following major components listed in Table 8-5:

Table 8-5. SSP Room HVAC Major Components

Component	Description
ACU-001	A split system heat pump is rated at ¾ ton and consists of one inside heat exchanger unit and one outside heat exchanger unit

8.3.3 Stream Data

The streams in these systems are designed to provide general building ventilation and temperature control only.

8.3.4 Physical Location and Layout

The CCA HVAC System AHUs are located in the CCA AHU Room in the CCA on the west side of the AFF. The CCA Exhaust Fans (Toilet, Laboratory, and Work Area) are roof mounted fans.

The Compressor Building HVAC Exhaust Fans are located on the roof of the Compressor Building. The Inlet Louvers are located on the north and south walls of the Compressor Building.

The SSP Room HVAC System inside unit is mounted on the west wall of the room. The outside unit is located just outside of the building beside the door.

8.3.5 System Control Features and Interlocks

8.3.5.1 System Monitoring

CCA HVAC System – The dP across the filters in the AHUs is monitored to indicate performance of the filters. The status of the AHU centrifugal supply fans (On/Off) is monitored. Status of the exhaust fans is also monitored (On/Off). The AHUs' discharge air flow is monitored to ensure sufficient air flow. Temperature in the CCA Operator station and the CCA work area is monitored to ensure adequate temperature for human comfort.

See Table 8-6 for a listing of instruments.

Compressor Building HVAC System – The temperature in the Compressor Building is monitored to provide indication of proper system operation. However, the exhaust fans and inlet louvers are controlled locally.

SSP Room HVAC System – The temperature in the SSP Room is controlled. The heat pump only provides cooling and heating depending on the temperature setting of the unit. Although part of the CPA structure, this room is accessible only from the outside. Outside air enters the room when the door opens. The unit is controlled by a hand-held, battery powered remote control device.

Table 8-6. CCA HVAC Instrumentation

Initiator Tag	Alarm Setpoint Document	Drawing
FI-6056	J-JZ-J-00933[42]	M-MW-J-0007[43]
FI-6062	J-JZ-J-00934[44]	M-MW-J-0007[43]
PDI-6052	J-JZ-J-00935[88]	M-MW-J-0007[43]
PDI-6058	J-JZ-J-00936[89]	M-MW-J-0007[43]
TIC-6054	J-JZ-J-00939[132]	M-MW-J-0007[43]
TIC-6065	J-JZ-J-00940[133]	M-MW-J-0007[43]

8.3.5.2 Control Functions

CCA HVAC System – The CCA HVAC System is controlled and monitored through the DCS. Remote control of the system is provided from the CR and SSP. Local control capability is provided for startup, testing, maintenance, and emergency operation. The temperature of the air supplied to the CCA is controlled by 3-way chilled water control valves (TV-6054A/B) when cooling is required and by AHU electric heating coils when heating is required.

Compressor Building HVAC System – The Compressor Building HVAC System louvers and exhaust fans are automatically controlled by a local thermostat to maintain required temperature in the Compressor Building. The exhaust fans activate automatically on high temperature and the motorized inlet louvers open simultaneously.

SSP Room HVAC System – The SSP Room HVAC System is controlled by a hand-held, battery powered remote control device. The unit operates continuously.

8.4 Operations

8.4.1 Initial Configuration

Initial configuration of the CCA HVAC System units is in a de-energized mode. Both automatic AHU discharge dampers are in the open position via the DCS.

Initial configuration of the Compressor Building HVAC System is in a de-energized mode. Both louvers are closed and the exhaust fans are off.

Initial configuration of the SSP Room HVAC System is in an operating status. After the unit is installed and power is connected, it is operating.

8.4.2 System Startup

The general starting order for the CCA HVAC System is:

1. Start exhaust fan FAN-003 or -004,
2. Start AHU-008 and -009,
3. Automatic dampers FCD-6052 and -6062 modulate to maintain the flow set point,
4. Automatic bypass dampers HCD-6057 and -6060 are closed,
5. 3-way chilled water flow control valves modulate to maintain temperature set point,
6. AHU electric heating coils modulate to maintain temperature set point, and
7. Duct heating coil EHC-002 modulates to maintain temperature set point.

The general starting order for the Compressor Building exhaust system is:

1. Exhaust fans FAN-011 and -012 run to meet temperature set point,
2. Automatic wall-mounted air intake dampers open when fans are energized, and
3. Unit heaters are controlled by integral thermostats.

The SSP Room HVAC System is started by engaging the main power switch.

8.4.3 Normal Operations

During normal operations, the CCA HVAC System is operating with both AHU-008 and -009 running and one of the exhaust fans (FAN-003 or -004) also running.

During normal operations, the Compressor Building HVAC System will operate on automatic control of the dampers and fans, based on the temperature of the building. On increasing temperature, the louvers will open and the exhaust fans will start.

During normal operations, the SSP Room HVAC System operates continuously. The inside unit fan blows air continuously through the room. The outside compressor operates as needed to maintain the temperature setpoint.

8.4.4 Off-Normal and Recovery Operation

Upon loss of power, the CCA HVAC System AHUs and exhaust fans are de-energized.

Upon loss of power, the Compressor Building HVAC System louvers and exhaust fans are de-energized.

Upon loss of power, the SSP Room HVAC System is de-energized.

8.4.5 System Shutdown

The CCA HVAC System is shut down by de-energizing the AHUs and exhaust fans. The DCS will automatically de-energize the electric heating coils and the duct heater, and shift the 3-way chilled water valves into the bypass mode.

The Compressor Building HVAC System is shut down by de-energizing the louvers and exhaust fans.

The SSP Room HVAC System is shut down by de-energizing the air conditioning unit.

9.0 PROCESS BUILDING HEAT RECOVERY SYSTEM

The Process Building Heat Recovery System extracts waste heat from the PBVS exhaust duct and returns it to the PBVS air supply AHUs, in order to recover rejected heat from the Process Building.

9.1 System Functions

During cold months, the Process Building Heat Recovery System extracts waste heat from the PBVS exhaust duct and returns it to the PBVS air supply inlet AHUs, in order to recover the otherwise wasted heat from the Process Building. In warmer months, the Process Building Heat Recovery System rejects heat from the incoming air to the exiting stack exhaust air.

The Process Building Heat Recovery System is not credited for accident prevention or mitigation in the current SWPF SB.

9.2 Operational Overview

The Process Building Heat Recovery System functions to extract waste heat from the Process Building exhaust air stream when the outside air temperature is less than 52°F (adjustable). This waste heat is extracted by heat recovery coils located on the PBVS exhaust duct upstream of the PBVS exhaust fans. The heated water from the heat recovery coil is then re-circulated to the PBVS supply air AHUs, where the heated water passes through heat recovery coils in the AHUs to preheat the incoming outside air.

Conversely, the Process Building Heat Recovery System also operates when the outside temperature is above 80°F (adjustable). During this mode of operation, the heating cycle is reversed as the heat recovery coils in the PBVS supply AHUs remove heat from the incoming air and reject it to the PBVS exhaust air.

The Process Building Heat Recovery System consists of heat recovery coils located in each PBVS outside air supply AHU and in the common PBVS exhaust duct upstream of the PBVS exhaust fans. The heat recovery water is transferred between the heat recovery coils by redundant pumps (P-007A/B). The heat recovery water re-circulation loop also contains an air separator to remove any entrained air in the water, a Bladder Expansion Tank (TK-007) to maintain acceptable system pressure during temperature changes in the fluid, and a chemical feed tank to allow chemical adjustment of the re-circulating hot water.

9.3 Configuration Information

9.3.1 Description of System

A schematic of the Process Building Heat Recovery System is shown in Figure 2-8.

In the winter when outside air temperature is below the system set point, the heat recovery coil in the PBVS exhaust duct extracts heat from the warm Process Building exhaust air and returns the extracted heat to the heat recovery coils located in the PBVS supply AHUs to preheat the cool incoming outside air. In the summer months, the Process Building Heat Recovery System heat recovery coils precool the incoming air and reject the removed heat to the cooler PBVS exhaust air through the heat recovery coil in the PBVS exhaust duct.

The Process Building Heat Recovery System recovers waste heat from the PBVS exhaust duct through one 100%-capacity heat recovery coil (HRC-001), which is located in the common PBVS exhaust duct upstream of the PBVS exhaust fans. The exhaust heat recovery coil is in service whenever the Process Building Heat Recovery System is operating in summer or winter.

One Process Building Heat Recovery System 50%-capacity heat recovery coil is installed in each of the three PBVS supply AHUs (AHU-001, -002, and -003). Two of the three PBVS AHUs are normally operating; therefore, two inlet Process Building Heat Recovery System heat recovery coils are in operation at any given time during system operation.

Water is re-circulated between the inlet and outlet Process Building Heat Recovery System heat recovery coils by the redundant 100%-capacity Process Building Heat Recovery System pumps (P-007A and -007B). One of the two pumps is normally operating, with the second on standby. The pumps are driven by a VFD-controlled motor to allow variable speed operation.

The Process Building Heat Recovery System is provided with an air separator (SEP-007) to remove any air that may be entrained in the re-circulating heated water. The system is also provided with a Bladder Expansion Tank (TK-007) that maintains a constant system pressure on the pump suction as the volume of the water being re-circulated changes as the water is heated and cooled in the heat recovery coils. Finally, the Process Building Heat Recovery System includes a Chemical Bypass Feeder Tank (TK-008). This tank provides the ability to add chemicals to the re-circulating water as necessary to provide adjustment to the water chemistry during system operation.

The Process Building Heat Recovery System is shown in detail in the Air Flow Diagrams listed in Table 9-1.

Table 9-1. Process Building Heat Recovery System Air Flow Diagrams

Diagram Number	Diagram Title
M-MW-J-0001	*SWPF Process Building HVAC Composite Flow Diagram (U)*[17]
M-MW-J-0002	*SWPF Process Building HVAC Building Supply Air Handling Unit AHU-001 Air flow and Control Diagram (U)*[18]
M-MW-J-0003	*SWPF Process Building HVAC Building Supply Air Handling Unit AHU-002 Air Flow and Control Diagram (U)*[19]
M-MW-J-0004	*SWPF Process Building HVAC Building Supply Air Handling Unit AHU-003 Air Flow and Control Diagram (U)*[20]
M-MW-J-0005	*SWPF Process Building HVAC Heat Recovery System Air Flow and Control Diagram (U)*[226]
M-MW-J-0021 SH2	*SWPF Process Building Exhaust Air Air Flow and Control Diagram (U)*[35]

9.3.2 Major Components

The Process Building Heat Recovery System consists of the following major components listed in Table 9-2:

The Process Building Heat Recovery System interfaces with the PBVS, Plant Air System, Process Building Water System, Storm Water Drain System, DCS, and Electrical Power Supply System.

Table 9-2. Heat Recovery System Major Components

Component	Description
HRC-001	One 100%-capacity heat recovery coil located in the common PBVS exhaust duct upstream of the PBVS exhaust fans. The heat recovery coil is rated at 170 gallons per minute (gpm)
	Three 50%-capacity heat recovery coils that are located internal to the PBVS AHUs (AHU-001, -002, and -003)
P-007A and P-007B	Two 100%-capacity re-circulation pumps that circulate water between the inlet and exhaust heat recovery coils. Each pump is rated 170 gpm and 7.5 hp.
SEP-007	One air separator to remove entrained air within the re-circulated water. The air separator is rated at 170 gpm.
TK-008	One Chemical Bypass Feeder Tank that allows the addition of chemicals to the re-circulated water, as necessary, to adjust the chemistry of the water. The tank has a 5-gallon capacity.
TK-007	One Bladder Expansion Tank that allows volumetric changes in the re-circulated water due to temperature changes, while maintaining the system pressure within acceptable limits.

9.3.3 Stream Data

In cold weather, the Process Building Heat Recovery System heats the incoming outside air by extracting heat from the exhaust air. In warmer months, the Process Building Heat Recovery System is designed to reverse this cycle by rejecting heat from the incoming air to the exiting stack exhaust air.

9.3.4 Physical Location and Layout

The heat recovery coils on the supply side of the Process Building Heat Recovery System are located inside the PBVS supply AHUs (AHU-001, -002, and -003), which are located in the Mechanical Room on elevation 100' of the Northern FSA. The Process Building Heat Recovery System pumps (P-007A and -007B), air separator (SEP-007), Bladder Expansion Tank (TK-007), and Chemical Bypass Feeder Tank (TK-008) are also located in the Mechanical Room. The heat recovery coil on the exhaust side of the Process Building Heat Recovery System is located in the common PBVS exhaust duct just upstream of the PBVS exhaust fans (FAN-001 and -002) in the Process Building Exhaust HEPA Filter Room on elevation 116' of the CPA.

9.3.5 System Control Features and Interlocks

9.3.5.1 System Monitoring

The Process Building Heat Recovery System is monitored through the DCS to provide feedback to the Operator regarding return and supply water temperature and corresponding pressures. Status of the re-circulation pumps (On/Off) is monitored. The inlet and outlet of the pumps are monitored for pressure. The outside air temperature is monitored to determine the need for system operation.

See Table 9-3 for a listing of instruments.

Table 9-3. Heat Recovery System Instrumentation

Initiator Tag	Alarm Setpoint Document	Drawing
FI-4120	J-JZ-J-01006[41]	M-MW-J-0021 SH2[35]
FIC-4113	J-JZ-J-00896[54]	M-MW-J-0002[18]
FIC-4128	J-JZ-J-00904[55]	M-MW-J-0003[19]
FIC-4133	J-JZ-J-00926[56]	M-MW-J-0004[20]
PDI-4111	J-JZ-J-00898[79]	M-MW-J-0002[18]
PDI-4112	J-JZ-J-00899[80]	M-MW-J-0002[18]
PDI-4125	J-JZ-J-00902[81]	M-MW-J-0003[19]
PDI-4126	J-JZ-J-00903[82]	M-MW-J-0003[19]
PDI-4131	J-JZ-J-00927[83]	M-MW-J-0004[20]
PDI-4132	J-JZ-J-00928[84]	M-MW-J-0004[20]
SIC-4105A	J-JZ-J-01328[113]	M-MW-J-0005[226]
SIC-4105B	J-JZ-J-01329[114]	M-MW-J-0005[226]
TIC-4100A	J-JZ-J-00900[130]	M-MW-J-0002[18]
TIC-4100B	J-JZ-J-00901[131]	M-MW-J-0002[18]

9.3.5.2 Control Functions

The Process Building Heat Recovery System is controlled through the DCS. In winter mode, the re-circulating water flow rate to the heat recovery coils inside the PBVS supply AHUs is

regulated by modulating temperature control valves at each AHU to maintain the set point of the air stream exiting the AHUs. In summer mode, the system runs at full capacity (temperature control valves fully open) in order to reject as much heat as possible. The pumps are VFD driven and adjust speed to maintain the discharge pressure set point.

9.4 Operations

9.4.1 Initial Configuration

Initial configuration of the Process Building Heat Recovery System heat recovery coil units is in a de-energized mode. The water supply isolation valves to both inlet and outlet heat recovery coils are in the closed position via the DCS and the re-circulation pumps are off.

9.4.2 System Startup

The Process Building Heat Recovery System is automatically started, when enabled, by the DCS whenever the outside air temperature is below 52ºF (adjustable) or above 80ºF (adjustable). The DCS starts one of the two re-circulation pumps that initiate system operation.

9.4.3 Normal Operations

- **Normal Winter Operations** – The Process Building Heat Recovery System re-circulation pump is activated to extract bulk waste heat from the PBVS exhaust air stream when the outside air temperature is less than 52°F (adjustable). This bulk waste heat is extracted by the heat recovery coil in the common PBVS exhaust duct upstream of the PBVS exhaust fans. The heated water is re-circulated to pre-heat the incoming outside air through the heat recovery coils in the PBVS AHUs.

  Once the water is passed through the PBVS supply AHU heat recovery coils, the water is routed through a water/air separator to remove any entrained air in the piping system. Water pressure is maintained in the system upstream of the supply pump via the Bladder Expansion Tank (TK-007). The water is also treated at this point from the Chemical Bypass Feeder Tank (TK-008).

- **Normal Summer Operations** – The Process Building Heat Recovery System re-circulating water pumps are also energized when the outside air rises above 80°F (adjustable). In this mode of operation, the system cools the inlet air and rejects heat to the PBVS exhaust air stream prior to exiting the process stack.

- Refer to 15940[5], for a detailed description.

9.4.4 Off-Normal and Recovery Operation

On loss of electric power, the Process Building Heat Recovery System components are de-energized.

9.4.5 System Shutdown

The DCS starts and stops the operational Heat Recovery System pumps (P-007A and -007B), based on the outside ambient temperature.

10.0 ANALYTICAL LABORATORY HVAC SYSTEM

The Analytical Laboratory is provided with a separate HVAC zone within the PBVS. Laboratory ventilation is designed to minimize potential for chemical or radiological contamination within the Laboratory occupied areas. All Analytical Laboratory areas receive conditioned and filtered air from the PBVS supply header. The Analytical Laboratory HVAC System maintains cascading air flow from the administration areas and corridors toward the three laboratories (Radiochemistry, Inorganic, and Organic) and into the gloveboxes, Hot Cells, and radio hoods. Exhaust air from the gloveboxes, Hot Cells, and radio hoods is scrubbed and filtered and then ducted to the main PBVS exhaust systems.

10.1 System Functions

The Analytical Laboratory HVAC System is designed to provide confinement of radioactive material in the Analytical Laboratory areas. The Analytical Laboratory HVAC System provides confinement by use of pressure zones. The Analytical Laboratory contains two pressure zones within the Analytical Laboratory System. Zone 1 areas have the greatest radiological consequences, should an airborne release occur. Zone 2, areas are less likely to become contaminated, and may contain radiological materials. The Analytical Laboratory HVAC System is designed to maintain a cascading air flow from Zone 2 into Zone 1 areas.

The Primary Confinement Zone, designated as Zone 1, includes the Analytical Laboratory gloveboxes (including the Glovebox [GB-14], which houses the Sample Transfer System [STS-001]) and the Hot Cells. While the gloveboxes are designated as Zone 1, the gloveboxes are expected to operate at approximately -0.5”w.g.

The Secondary Confinement Zone, designated as Zone 2, includes those areas that are ordinarily free of contamination, but have the potential for being contaminated. The Analytical Laboratory (including radio hoods), Laboratory Storage Room, Laboratory Vestibule, Laboratory Entry, East/South Laboratory Corridor, Laboratory Office, Laboratory Vent Room, and Hot Laboratory are included in the Secondary Confinement. To ensure that any radioactive material that becomes airborne is confined, the Analytical Laboratory HVAC System is designed to maintain the Zone 1 areas at a negative pressure, with respect to the Zone 2 areas, and the Zone 2 areas at a negative pressure, with respect to the PBVS Zone 3 areas and the atmosphere. The Hot Cells are maintained at a pressure of nominal -3.0 inches w.g., with respect to the atmosphere, and Zone 2 areas are maintained at a pressure of nominal -0.3 inches w.g., with respect to the atmosphere.

Outside air is supplied to the Analytical Laboratory areas from the PBVS supply AHUs. Air exhaust from the Analytical Laboratory is provided by a connection from the Analytical Laboratory HVAC System to the PBVS exhaust fans. No exhaust fans are included in the

Analytical Laboratory HVAC System itself. The Analytical Laboratory HVAC System includes scrubbers and filtration units to remove hazardous chemical and radioactive material from the exhaust streams before they are released to the atmosphere through the PBVS exhaust ductwork to the Exhaust Stack.

The Analytical Laboratory HVAC System is credited for filtration of radiological material to protect facility workers from the consequences of non-NPH pressurized leaks and sprays in the sample gloveboxes and Hot Cells in the current SWPF SB.

10.2 Operational Overview

The Analytical Laboratory is maintained at a slightly negative pressure, with respect to the atmosphere (Zones 1 and 2). Two filtered exhaust systems are incorporated into the Analytical Laboratory's HVAC design. The Hot Cells (Zone 1) air supply is provided by air from the Hot Laboratory (Zone 2) and the gloveboxes (Zone 1), which are provided with HEPA-filtered air from the Laboratory general process area (Zone 2). The glovebox inlet HEPAs ensure steady flow from the general laboratory space through the hoods and guard against contaminated flow reversals out of the gloveboxes. Another HEPA guards against flow reversal from the inlet at the Hot Laboratory. The radio hood (Zone 2) air supply is drawn from the general laboratory work space (Zone 2) to ensure that air flows from less contaminated (cleaner) to more highly contaminated areas to mitigate the potential for contamination release.

The Analytical Laboratory HVAC System includes redundant scrubbers to remove potential acid vapors in the exhaust air stream prior to filtration in the HEPA filters. This prevents damage to the HEPA filters. One pair of scrubbers (SCB-001/002) is provided in the exhaust from the radio hoods, and a second pair (SCB-003/004) is provided in the exhaust from the gloveboxes and Hot Cells.

The volume of air transferred into the Laboratory area (approximately 10,855 cfm) is exhausted to the exhaust header to provide isolation from the general building air space. The Laboratory air supply volume is initially distributed into the following areas: Entry, Corridor, Storage, Office, Restroom, Bottle Storage, Vestibule, and Laboratory Process Areas. The bulk of the incoming air supply (about 68%) is routed to the process areas. The balance of the incoming (about 32%) is routed to adjacent Laboratory areas to provide make-up air flow volume that ensures the correct cascading pressure is maintained for the main Laboratory process areas.

10.3 Configuration Information

10.3.1 Description of System

The Analytical Laboratory HVAC System provides treatment and filtration of exhaust air from the Analytical Laboratory areas to maintain the confinement of hazardous materials that may be present in the Laboratory environment. The Analytical Laboratory HVAC System is a once-through cascade system. Schematics of the Analytical Laboratory HVAC System are shown in Figure 2-1. Supply air from the PBVS is delivered to the Zone 2 areas of the Laboratory

complex. Exhaust air is drawn from the Zone 1 and Zone 2 areas of the Laboratory by the PBVS exhaust fans. From the Zone 2 areas, air is drawn into the Zone 1 areas through inlet HEPA filters by the even more negative pressure in the Zone 1 areas generated by the PBVS exhaust fans. Ventilation zoning is maintained in the Analytical Laboratory by the routing of supply, transfer, and exhaust ducts, and regulation of control dampers located throughout the system.

Exhaust air from the Analytical Laboratory is treated by two stages of HEPA filters prior to its return to the PBVS exhaust system upstream of the PBVS exhaust fans.

Supply air to the Analytical Laboratory is delivered from the outside by the PBVS supply AHUs. The supply air is delivered to the Zone 2 areas of the Analytical Laboratory through ductwork from the air supply header in PBVS. The supply air header to the Analytical Laboratory contains a pressure control damper (PCD-4321) that controls the flow of supply air to ensure the required negative pressure in the Laboratory Zone 2 areas is maintained. The supply air header also contains an electric heating element (EHC-006) to provide supplemental heating of the air, as necessary, to maintain minimum required temperatures in the Organic Laboratory. From the supply air header, supply air is distributed to the Analytical Laboratory Zone 2 areas by ductwork containing manual balancing dampers.

Supply air to the Zone 1 areas (gloveboxes and Hot Cells) is drawn from the Zone 2 areas by the more negative pressure in the Zone 1 areas. The Zone 1 inlet ducts are provided with a HEPA filter unit to provide filtration in the event of backflow from the Zone 1 area back to the Zone 2 area. Each inlet HEPA filter unit contains a roughing pre-filter and one stage of HEPA filter. The HEPA filters have a particulate removal efficiency of 99.97% at 0.3-micron particulate size.

Air is exhausted from the Zone 2 areas of the Analytical Laboratory through the Hot Laboratory and the radio hoods because these are the Zone 2 areas with the highest potential for contamination. Exhaust air from the radio hoods and Hot Laboratory is treated and filtered before it is released to the PBVS exhaust header upstream of the exhaust fans. The exhaust path contains two redundant 100%-capacity parallel treatment trains. Normally one treatment train is in operation and the second is in standby. Alignment of the standby train to operating mode is manually controlled through the operation of local dampers.

Each exhaust treatment train consists of a scrubber (SCB-001/002) and a HEPA filter unit (FLT-009/017). The scrubber is provided to remove acid vapors that may be present in the Laboratory exhaust in order to protect the downstream HEPA filters from damage from the acid. Scrubber blowdown is gravity-drained to the Lab Collection Tanks located in the AFF. The HEPA filter units each contain a roughing pre-filter and two stages of HEPA filters in series. The HEPA filters have a particulate removal efficiency of 99.97% at 0.3-micron particulate size. A flow control damper (FCD-4330) is provided on the common exhaust line from the treatment units that modulates to control the flow rate The treated exhaust is then ducted to the main PBVS exhaust system just prior to the main exhaust fans.

Design air flows for the radio hoods are based on meeting ANSI Z95.1 requirements using the methodology from American Society of Heating, Refrigerating, and Air-conditioning Engineers

(ASHRAE) 110-R, *Method of Testing Performance of Laboratory Fume Hoods*[227]. Radio hood design includes a fixed-height sash with a horizontal sliding window which allows adequate access to the entire radio hood, while minimizing exhaust required air flow.

A separate exhaust control and treatment system is provided for the Zone 1 gloveboxes and Hot Cells. The Hot Cell exhaust is designed to maintain a lower pressure within the gloveboxes and Hot Cells (Zone 1) than the surrounding Laboratory and Hot Laboratory Room pressurization (Zone 2). Each glovebox is equipped with an inlet HEPA filter to protect workers, should a flow reversal occur. Air flow into the gloveboxes is from room air. The air from each glovebox enters a common header and is transferred to the Hot Cells at the eastern wall of the Hot Cells. Distribution of air flow to the Hot Cells from multiple gloveboxes allows inlet filter isolation and replacement without needing to shut down the ventilation system. A bag-in/bag-out design is used for the inlet filters to ensure that containment is maintained during filter replacement.

Air is swept through the Hot Cells and exhausted from the western wall. Exhaust air from the Hot Cells is treated and filtered before it is released to the PBVS exhaust header upstream of the exhaust fans. The exhaust path contains two redundant 100%-capacity parallel treatment trains. Normally one treatment train is in operation and the second is in standby. Alignment of the standby train to operating mode is manually controlled through the operation of local dampers.

Each exhaust treatment train consists of a scrubber (SCB-003/004) and a HEPA filter unit (FLT-021/022). The scrubber is provided to remove acid vapors that may be present in the Laboratory exhaust in order to protect the downstream HEPA filters from damage from the acid. Scrubber blowdown is gravity-drained to the Lab Collection Tanks located in the AFF. The HEPA filter units each contain a roughing pre-filter and two stages of HEPA filters in series. The HEPA filters have a particulate removal efficiency of 99.97% at 0.3-micron particulate size. A pressure control damper (PCD-4382) is provided on the inlet line to the treatment units that modulates to control the Hot Cells pressure. A flow control damper (FCD-4381) is provided on the common exhaust line from the treatment units that modulates to maintain the required flow rate. Treated exhausts from the Hot Cells and radio hoods and Hot Laboratory are combined and transferred into the main PBVS exhaust system just prior to the exhaust fans.

The Analytical Laboratory design includes a supply and distribution system for compressed gas cylinders that are located in the Laboratory Bottle Storage area. The gas cylinder storage cabinets are ventilated directly to the radio hood and Hot Laboratory exhaust header to minimize potential for asphyxiation, in the event of a leak at the cylinder connection/regulators.

The Analytical Laboratory HVAC System is shown in detail in the Air Flow and Control Diagrams listed in Table 10-1.

Table 10-1. Analytical Laboratory HVAC System Air Flow and Control Diagrams

Diagram Number	Diagram Title
M-MW-J-0010	*SWPF Process Building Supply Air Analytical Laboratory Area Air Flow and Control Diagram* ***(U)***[24]
M-MW-J-0025	*SWPF Process Building Building Supply Air Organic Laboratory Air Flow and Control Diagram (U)*[228]
M-MW-J-0026	*SWPF Process Building Building Supply Air Inorganic Laboratory Air Flow and Control Diagram (U)*[229]
M-MW-J-0027	*SWPF Process Building Building Supply Air Radiochemistry Laboratory Air Flow and Control Diagram (U)*[230]
M-MW-J-0028	*SWPF Process Building Building Supply Air Radiochemistry Laboratory Air Flow and Control Diagram (U)*[231]
M-MW-J-0029	*SWPF Process Building Building Supply Air Hot Laboratory Air Flow and Control Diagram (U)*[232]
M-MW-J-0030	*SWPF Process Building Analytical Laboratory Radio Hood Exhaust Air Header, Air Flow and Control Diagram (U)*[233]
M-MW-J-00031	*SWPF Process Building Analytical Laboratory HEPA Filter Exhaust Air Flow and Control Diagram* ***(U)***[234]
M-MW-J-00032	*SWPF Process Building Analytical Laboratory HEPA Filter Exhaust Air Flow and Control Diagram* ***(U)***[235]
M-MW-J-00035	*SWPF Process Building Analytical Laboratory Glove Box Exhaust Air Header Air Flow and Control Diagram* ***(U)***[236]

10.3.2 Major Components

The Analytical Laboratory HVAC System consists of the following major equipment listed in Table 10-2:

Table 10-2. Analytical Laboratory HVAC Major Components

Component	Description
FLT-019, FLT-023, FLT-024, FLT-025, FLT-026, FLT-027, FLT-028, FLT-029, FLT-030, FLT-031, FLT-032, FLT-033, FLT-034	Glovebox inlet HEPA filter units. Each inlet filter unit consists of a roughing pre-filter and a single-stage HEPA filter. The HEPA filter has a particulate removal efficiency of 99.97% with a 0.3-micron particle size. A bag-in/bag-out or push-through design is used for the inlet filters to ensure that containment is maintained during filter replacement. Each HEPA filter is rated at 35 cfm and has a surface area of 1 square foot (ft^2), except for filter FLT-019, which is rated at 55 cfm and filter FLT-029, which is rated at 200 cfm and has a surface area of $3ft^2$
FLT-020	Hot Laboratory exhaust HEPA filter. The filter unit consists of a roughing pre-filter and a single-stage HEPA filter. The HEPA filter has a particulate removal efficiency of 99.97% with a 0.3-micron particle size. A bag-in/bag-out or push-through design is used for the inlet filters to ensure that containment is maintained during filter replacement. The HEPA filter is rated at 860 cfm and has a surface area of 4 ft^2
SCB-001, SCB-002, SCB-003, SCB-004	Exhaust air scrubbers are designed to remove HNO^3 from the exhaust air with 95% efficiency.
FLT-009, FLT-017, FLT-021, FLT-022	Exhaust air HEPA filter units each contain a roughing pre-filter and two stages of HEPA filters in series. The HEPA filter has a particulate removal efficiency of 99.97% with a 0.3-micron particle size. The radio hood and Hot Laboratory exhaust HEPA filters (FLT-009/017) are rated for 9,255 cfm and have a surface area of 36 ft^2. The Hot Cell exhaust HEPA filters (FLT-021/022) are rated for 1,500 cfm and have a surface area of 8 ft^2
EHC-006	Air supply electric heating element is rated at 198 kW with a 460 V, 3-phase solid-state power controller and 4-20 milliamp direct current control signal
FCD-4330	Pneumatic operated flow control damper is located on the discharge of the radio hood and Hot Laboratory exhaust treatment unit. The damper modulates to maintain the required flow in the Zone 2 areas
PCD-4382	Pneumatic pressure control damper located on the inlet of the Hot Cell exhaust treatment unit to maintain the required pressure in the Zone 1 areas
FCD-4381	Pneumatic operated flow control damper located on discharge of the Hot Cell exhaust treatment unit to maintain the required pressure in the Zone 1 areas.

10.3.3 Stream Data

The air stream for the Analytical Laboratory HVAC System is once-through conditioned air supplied by the PBVS. Additionally, all of the process waste streams will potentially be found in the Laboratory exhaust air due to the process sampling mission of the Laboratory.

10.3.4 Physical Location and Layout

The radio hood and Hot Laboratory exhaust treatment units are located in the PVVS/PMVS and Laboratory Vent Room located on elevation 139' on the northern section of the CPA. The Hot Cell exhaust treatment units are located in the Laboratory Hot Cell Exhaust Room located on elevation 139' on the western section of the CPA. The Analytical Laboratory itself is located on elevation 139' of the southern section of the CPA.

10.3.5 System Control Features and Interlocks

10.3.5.1 System Monitoring

The dP is monitored in the Laboratory Office East/South Laboratory Corridor, Organic Laboratory, Inorganic Laboratory, Radiochemistry Laboratory, and Hot Laboratory (Zone 2 areas), with respect to the atmosphere. The temperature in the Organic Laboratory is monitored. The exhaust air velocity from each of the radio hoods is monitored. The dP across each filter in the glovebox inlet filter units is monitored to confirm unit operation. The dP in each glovebox and the Hot Cells, with respect to its surrounding room, is monitored. The dP on the exhaust treatment unit inlet, with respect to the outside, is monitored. The dP across each filter in the exhaust treatment units is monitored to indicate performance of the filters. Finally, the discharge flow rate of each exhaust treatment unit is monitored.

See Table 10-3 for a listing of instruments.

Table 10-3. Analytical Laboratory HVAC Instrumentation

Initiator Tag	Alarm Setpoint Document	Drawing
AI-1121A	J-JZ-J-01031, *SWPF AI-1121A Laboratory Count Room Oxygen*[237]	M-MW-J-0025[228]
AI-1121B	J-JZ-J-01032, *SWPF AI-1121B Laboratory Count Room Oxygen*[238]	M-MW-J-0025[228]
FI-4601	J-JZ-J-01060, *SWPF FI-4601 Radio Hood 1 Air Velocity*[239]	M-MW-J-0028[231]
FI-4602	J-JZ-J-01061, *SWPF FI-4602 Radio Hood 2 Air Velocity*[240]	M-MW-J-0028[231]
FI-4603	J-JZ-J-01048, *SWPF FI-4603 Radio Hood 3 Air Velocity*[241]	M-MW-J-0027[230]
FI-4604	J-JZ-J-01049, *SWPF FI-4604 Radio Hood 4 Air Velocity*[242]	M-MW-J-0027[230]
FI-4605	J-JZ-J-01050, *SWPF FI-4605 Radio Hood 5 Air Velocity*[243]	M-MW-J-0027[230]
FI-4606	J-JZ-J-01051, *SWPF FI-4606 Radio Hood 6 Velocity*[244]	M-MW-J-0027[230]
FI-4607	J-JZ-J-01039, *SWPF FI-4607 Radio Hood 7 Air Velocity*[245]	M-MW-J-0026[229]
FI-4608	J-JZ-J-01040, *SWPF FI-4608 Radio Hood 8 Air Velocity*[246]	M-MW-J-0026[229]
FI-4609	J-JZ-J-01041, *SWPF FI-4609 Radio Hood 9 Air Velocity*[247]	M-MW-J-0026[229]
FI-4610	J-JZ-J-01042, *SWPF FI-4610 Radio Hood 10 Air Velocity*[248]	M-MW-J-0026[229]
FI-4611	J-JZ-J-01043, *SWPF FI-4611 Radio Hood 11 Air Velocity*[249]	M-MW-J-0026[229]
FI-4612	J-JZ-J-01033, *SWPF FI-4612 Radio Hood 12 Air Velocity*[250]	M-MW-J-0025[228]
FI-4613	J-JZ-J-01034, *SWPF FI-4613 Radio Hood 13 Air Velocity*[251]	M-MW-J-0025[228]
FI-4614	J-JZ-J-01035, *SWPF FI-4614 Radio Hood 14 Air Velocity*[252]	M-MW-J-0025[228]
FI-4615	J-JZ-J-01036, *SWPF FI-4615 Radio Hood 15 Air Velocity*[253]	M-MW-J-0025[228]

Table 10-3. Analytical Laboratory HVAC Instrumentation (cont.)

Initiator Tag	Alarm Setpoint Document	Drawing
FI-4616	J-JZ-J-01037, *SWPF FI-4616 Radio Hood 16 Air Velocity*[254]	M-MW-J-0025[228]
FI-4617	J-JZ-J-01038, *SWPF FI-4617 Radio Hood 17 Air Velocity*[255]	M-MW-J-0025[228]
FIC-4330	J-JZ-J-00911, *SWPF FIC-4330 Lab Exhaust Airflow*[256]	M-MW-J-00031[234]
FIC-4381	J-JZ-J-00918, *SWPF FIC-4381 Lab Hot Cell Exhaust Airflow*[257]	M-MW-J-00032[235]
LI-4327	J-JZ-J-01319, *SWPF LI-4327 Analytical Lab SCFS Level*[258]	M-MW-J-00031[234]
LI-4397	J-JZ-J-01323, *SWPF LI-4397 Hot Cell SCFS Level*[259]	M-MW-J-00032[235]
PDI-4040	J-JZ-J-00921[65]	M-MW-J-00033[36]
PDI-4041	J-JZ-J-00922[66]	M-MW-J-00033[36]
PDI-4318	J-JZ-J-00905, *SWPF PDI-4318 Analytical Lab FLT-009 Pre Filter dP*[260]	M-MW-J-00031[234]
PDI-4319	J-JZ-J-00907, *SWPF PDI-4319 Analytical Lab FLT-009 Primary HEPA dP*[261]	M-MW-J-00031[234]
PDI-4320	J-JZ-J-00909, *SWPF PDI-4320 Analytical Lab FLT-009 Secondary HEPA dP*[262]	M-MW-J-00031[234]
PDI-4322	J-JZ-J-00906, *SWPF PDI-4322 Analytical Lab FLT-017 Pre Filter dP*[263]	M-MW-J-00031[234]
PDI-4323	J-JZ-J-00908, *SWPF PDI-4323 Analytical Lab FLT-017 Primary HEPA dP*[264]	M-MW-J-00031[234]
PDI-4324	J-JZ-J-00910, *SWPF PDI-4324 Analytical Lab FLT-017 Secondary HEPA dP*[265]	M-MW-J-00031[234]
PDI-4325	J-JZ-J-00945[87]	M-MW-J-0010[24]
PDI-4342	J-JZ-J-01044, *SWPF PDI-4342 GB-010 Intake Filter dP*[266]	M-MW-J-0026[229]
PDI-4344	J-JZ-J-01046, *SWPF PDI-4344 GB-011 Intake Filter dP*[267]	M-MW-J-0026[229]
PDI-4352	J-JZ-J-01052, *SWPF PDI-4352 GB-007 Intake Filter dP*[268]	M-MW-J-0027[230]
PDI-4356	J-JZ-J-01056, *SWPF PDI-4356 GB-009 Intake Filter dP*[269]	M-MW-J-0027[230]
PDI-4359	J-JZ-J-01058, *SWPF PDI-4359 Glovebox 8 Vacuum*[270]	M-MW-J-0027[230]
PDI-4360	J-JZ-J-01059, *SWPF PDI-4360 Glovebox 9 Vacuum*[271]	M-MW-J-0027[230]
PDI-4361	J-JZ-J-01062, *SWPF PDI-4361 GB-006 Intake Filter dP*[272]	M-MW-J-0028[231]
PDI-4363	J-JZ-J-01063, *SWPF PDI-4363 GB-005 Intake Filter dP*[273]	M-MW-J-0028[231]
PDI-4367	J-JZ-J-01071, *SWPF PDI-4367 GB-003 Intake Filter dP*[274]	M-MW-J-0028[231]
PDI-4371	J-JZ-J-01067, *SWPF PDI-4371 GB-001 Intake Filter dP*[275]	M-MW-J-0028[231]
PDI-4374	J-JZ-J-01074, *SWPF PDI-4374 Hot Cell Vacuum*[276]	M-MW-J-0029[232]

Table 10-3. Analytical Laboratory HVAC Instrumentation (cont.)

Initiator Tag	Alarm Setpoint Document	Drawing
PDI-4379	J-JZ-J-01078, *SWPF PDI-4379 Hot Lab Exhaust FLT-020 Pre Filter dP*[277]	M-MW-J-0029[232]
PDI-4380	J-JZ-J-01079, *SWPF PDI-4380 Hot Lab Exhaust FLT-020 HEPA dP*[278]	M-MW-J-0029[232]
PDI-4383	J-JZ-J-00913, *SWPF PDI-4383 Lab Hot Cell FLT-021 Pre Filter dP*[279]	M-MW-J-00032[235]
PDI-4384	J-JZ-J-01089, *PDIC-4384 Lab Hot Cell Exhaust FLT-021 Primary HEPA dP*[280]	M-MW-J-00032[235]
PDI-4385	J-JZ-J-00914, *SWPF PDI-4385 Lab Hot Cell FLT-022 Pre Filter dP*[281]	M-MW-J-00032[235]
PDI-4386	J-JZ-J-00915, *SWPF PDI-4386 Lab Hot Cell FLT-022 Primary HEPA dP*[282]	M-MW-J-00032[235]
PDI-4387	J-JZ-J-00916, *SWPF PDI-4387 Lab Hot Cell FLT-021 Secondary HEPA dP*[283]	M-MW-J-00032[235]
PDI-4388	J-JZ-J-00917, *SWPF PDI-4388 Lab Hot Cell FLT-022 HEPA dP*[284]	M-MW-J-00032[235]
PDI-4618	J-JZ-J-00924, *SWPF PDI-4618 Sample Xfer System Intake Filter dP*[285]	M-MW-J-00035[236]
PDI-4330	J-JZ-J-00912, *SWPF PDI-4330 Lab Exhaust Vacuum*[286]	M-MW-J-00031[234]
PDIC-4382	J-JZ-J-01077, *SWPF PDIC-4382 Lab Hot Cells Vacuum*[287]	M-MW-J-0029[232]

10.3.5.2 Control Functions

The Analytical Laboratory HVAC System is controlled and monitored through the DCS. Remote control of the system is provided from the CR and SSP. Local control capability for startup, testing, maintenance, and emergencies is also provided. Alignment of a standby exhaust treatment unit requires local manual action and cannot be performed remotely.

The system operates automatically to maintain the Zone 1 and Zone 2 areas of the Analytical Laboratory at their required pressures to maintain the confinement zones. The DCS automatically modulates control damper in the air supply and outlet of the exhaust treatment units to maintain the pressures in the zones.

10.4 Operations

10.4.1 Initial Configuration

The Analytical Laboratory HVAC System supply air flow is controlled by damper PCD-4321 (fail open) on the supply air header. The exhaust flow path, and supply damper (PCD-4321) are

designed to fail open to permit the exhaust flow to the PBVS to draw upon the Laboratory spaces and maintain the areas at negative pressure, with respect to outside air.

10.4.2 System Startup

In order for the Analytical Laboratory HVAC System to operate, the PBVS must be operating. With the PBVS operating (two of three supply air AHUs operating and one of two exhaust fans operating), the Analytical Laboratory HVAC System is started by opening the isolation dampers on the air supply header and the exhaust treatment unit discharges and placing them in automatic control.

10.4.3 Normal Operations

For normal operation of the Analytical Laboratory HVAC System, the PBVS is required to be operating. The air supply flow control damper FCD-4330 will maintain a constant volume of air supply through the Analytical Laboratory. The pressure control damper will maintain the flow rate necessary to result in the required pressures in the Zone 2 areas of the Analytical Laboratory.

Refer to 15940[5], for a detailed description.

10.4.4 Off-Normal and Recovery Operation

Upon loss of power, the air supply control damper will fail open and the air exhaust treatment unit discharge control dampers will fail open. This will allow the PBVS exhaust, which is powered from the Standby DG, to draw on the Analytical Laboratory areas and maintain at least some negative pressure in the areas.

10.4.5 System Shutdown

The Analytical Laboratory HVAC System is shut down by closing the air supply control damper and the exhaust discharge control damper to isolate the system from the PBVS.

11.0 NGS BUILDING HVAC SYSTEM

The NGS Building is provided with general building ventilation and heating. No air conditioning is provided.

11.1 System Functions

The NGS Building HVAC System utilizes exhaust fans, inlet louvers, and unit heaters to maintain temperature within the building within design values.

The current SB for the SWPF does not credit operation of the NGS Building HVAC System. Based on this determination, the NGS Building HVAC System is not a sfaety-related system.

11.2 Operation Overview

Outside ventilation air is drawn through a wall-mounted louver equipped with an insect screen and electrically operated dampers by two roof-mounted exhaust fans (FAN-016 and FAN-017). The fans are energized and the wall louver dampers are opened when building temperature rises above the thermostate set point. The fans are de-energized and the louver dampers close when the thermostat set point is satisfied. Heat is provided by four electric unti heaters (HTR-018, HTR-019, HTR-020 and HTR-021). Each heater is controlled individually by an integral thermostat to maintain minimum design temperatures.

11.3 Configuration Information

11.3.1 Description System

Refer to drawings listed in Table 11-1.

Table 11-1. NGS HVAC System Drawings

Drawing Number	Description
A-A2-J-0022	*SWPF Next Generation Solvent Building Architectural Floor Plan at Elevation 98'-9" (U)*[288]
A-A2-J-00041	*SWPF Next Generation Solvent Building Architectural Roof Plan at Elevation 123'-9" (U)*[289]
A-A5-J-0005	*SWPF Process Building Architectural Louver Schedule and Details (U)*[290]
M-MX-J-0002	*SWPF HVAC Mechanical Equipment Schedules (U)*[291]

11.3.2 Major Components

The NGS Building HVAC System consists of the following major components listed in Table 11-2.

Table 11-2. NGS HVAC Major Components

Component	Description
FAN-016 and FAN-017	Roof-mounted exhaust fans Capacity: 10,000 cfm Horsepower: 0.75 (See M-MX-J-0002)[291]
Louver L19	Fixed louver with thermostatically controlled electrically operated dampers (See A-A5-J-0005)[290]
HTR-018, HTR-019, HTR-020, & HTR-021	Electric unit heaters with integral thermostats Airflow: 400 cfm Heat output: 5.0 kW (See M-MX-J-0002)[291]

11.3.3 Stream Data

The streams in these systems are designed to provide general building ventilation and temperature control only.

11.3.4 Physical Location and Layout

The NGS Building HVAC Exhaust Fans are located on the roof of the NGS Building. The Louver is located on the south wall of the NGS Building. The electric unit heaters are located near each corner of the building approximately 9'-0" AFF. See A-A2-J-0022 and A-A2-J-00041.

11.3.5 System Control Features and Interlocks

11.3.5.1 System Monitoring

There is no System Monitoring of NGS Building HVAC.

11.3.5.2 Control Functions

The NGS Building HVAC System louver dampers and exhaust fans are automatically controlled by a local thermostat to maintain required temperatures in the NGS Building. The four electric unit heaters have integral thermostats that regulate space temperature.

11.4 Operations

11.4.1 Initial Configuration

Initial configuration of the NGS Building HVAC System is in a de-energized mode. The louver dampers are closed, the exhaust fans are off, and the unit heaters are off.

11.4.2 System Startup

The general starting order for the NGS Building exhaust system is:

1. Exhaust fans energize and the louver dampers open when the thermostat set point is exceeded.
2. The unit heaters energize when space temperature dops below the set point on the integral thermostats.

11.4.3 Normal Operations

During normal operations, the NGS Building HVAC System will operate on automatic control of the louver dampers and fans based on the temperature of the building. On increasing temperature, the louver dampers will open and the exhaust fans will start. When temperature is satisfied, the louver dampers will close and the exhaust fans will stop. When space temperature

decreases below the set point at the unit heaters, the heaters start and operate until temperature is satisfied.

11.4.4 Off-Normal and Recovery Operation

Upon loss of power, the NGS Building HVAC System louver dampers, exhaust fans and unit heaters are de-energized.

11.4.5 System Shutdown

The NGS Building HVAC System is shut down by de-energizing the louver dampers, exhaust fans and unit heaters.

12.0 REFERENCES

[1] P-DB-J-00004, *SWPF Balance of Plant Basis of Design*. Parsons, Aiken, South Carolina

[2] S-SAR-J-00002, *SWPF Documented Safety Analysis.* Parsons, Aiken, South Carolina.

[3] *Salt Waste Processing Facility Project Procedures Manual.* Parsons, Aiken, South Carolina.

[4] P-CDM-J-00001, *Configuration Management Manual.* Parsons, Aiken, South Carolina.

[5] Specification 15940, *SWPF HVAC Sequence of Operations*, Revision 1. Parsons, Aiken South Carolina.

[6] X-SD-J-00001, *SWPF Alpha Strike Proces System Description*. Parsons, Aiken, South Carolina.

[7] X-SD-J-00002, *SWPF Caustic-Side Solvent Extraction.* Parsons. Aiken, South Carolina.

[8] X-SD-J-00003, *SWPF Cold Chemicals Area System Description.* Parsons, Aiken, South Carolina.

[9] X-SD-J-00004, *SWPF Alpha Finishing Process System Description.* Parsons, Aiken, South Carolina.

[10] X-SD-J-00005, *SWPF Drains System Description*. Parsons, Aiken, South Carolina.

[11] X-SD-J-00006, *SWPF Sampling System Description.* Parsons, Aiken, South Carolina.

[12] X-SD-J-00007, *SWPF Air Pulse Agitators System Description*. Parsons, Aiken, South Carolina.

[13] E-SD-J-00002, *SWPF Electrical System Description.* Parsons, Aiken, South Carolina.

[14] J-SD-J-00002, *SWPF Instrumentation and Controls System Description.* Parsons, Aiken, South Carolina.

[15] F-SD-J-00001, *SWPF Fire Detection/Protection System Description*. Parsons, Aiken, South Carolina.

[16] DOE-HDBK-1169-2003, Nuclear Air Cleaning Handbook: Chapter 2: *System Considerations*. U.S. Department of Energy, Washington, D.C.

[17] M-MW-J-0001, *SWPF Process Building HVAC Composite Flow Diagram (U).* Parsons. Aiken, South Carolina.

[18] M-MW-J-0002, *SWPF Process Building HVAC Building Supply Air Handling Unit AHU-001 Air Flow and Control Diagram (U)*. Parsons, Aiken, South Carolina.

[19] M-MW-J-0003, *SWPF Process Building HVAC Building Supply Air Handling Unit AHU-002 Air Flow and Control Diagram (U)*. Parsons, Aiken, South Carolina.

[20] M-MW-J-0004, *SWPF Process Building HVAC Building Supply Air Handling Unit AHU-003 Air Flow and Control Diagram (U)*. Parsons, Aiken, South Carolina.

[21] M-MW-J-0006, *SWPF Process Building Building Supply Air Facility Support Area Air Flow and Control Diagram (U)*. Parsons, Aiken, South Carolina.

[22] M-MW-J-0008, *SWPF Process Building Building Supply Air Facility Support Area Air Flow and Control Diagram (U)*. Parsons, Aiken, South Carolina.

[23] M-MW-J-0009, *SWPF Process Building Building Supply Air Facility Support Area Air Flow and Control Diagram (U)*. Parsons, Aiken, South Carolina.

[24] M-MW-J-0010, *SWPF Process Building Building Supply Air Analytical Laboratory Area Air Flow and Control Diagram (U)*. Parsons, Aiken, South Carolina.

[25] M-MW-J-0011, *SWPF Process Building Building Supply Air Northern Central Process Area, Air Flow and Control Diagram (U*. Parsons, Aiken, South Carolina.

[26] M-MW-J-0012, *SWPF Process Building Operating Deck Air Flow and Control Diagram (U)*. Parsons, Aiken, South Carolina.

[27] M-MW-J-0013, *SWPF Process Building Building Supply Air Central Process Pump and Valve Galleries and Support Areas Air Flow and Control Diagram (U)*. Parsons, Aiken South Carolina.

[28] M-MW-J-0014, *SWPF Process Building AST-A Cell Air Flow and Control Diagram (U)*. Parsons, Aiken, South Carolina.

[29] M-MW-J-0015, *SWPF Process Building FFT-A Cell Air Flow and Control Diagram (U)*. Parsons, Aiken, South Carolina.

[30] M-MW-J-0016, *SWPF Process Building SSRT/WWHT Cell Air Flow and Control Diagram (U)*. Parsons, Aiken, South Carolina.

[31] M-MW-J-0017, *SWPF Process Building SSFT Cell Air Flow and Control Diagram (U*. Parsons, Aiken, South Carolina.

[32] M-MW-J-0018, *SWPF Process Building SEHT Cell Air Flow and Control Diagram (U).* Parsons, Aiken, South Carolina.

[33] M-MW-J-0019, *SWPF Process Building East and West CSSX Tank Cells Air Flow and Control Diagram (U).* Parsons, Aiken, South Carolina.

[34] M-MW-J-0021 SH1, *SWPF Process Building HEPA Filter Exhaust Air Flow and Control Diagram (U).* Parsons, Aiken, South Carolina.

[35] M-MW-J-0021 SH2, *SWPF Process Building Exhaust Air Air Flow and Control Diagram (U).* Parsons, Aiken, South Carolina.

[36] M-MW-J-00033, *SWPF Process Building ASDT Cell Air Flow and Control Diagram (U).* Parsons, Aiken, South Carolina.

[37] P-PZ-J-0001, *SWPF Process Building HVAC Confinement Zone and Pressurization Plan at EL 88'-6", 92'-0", 95'-0" and 100'-0" (U)*. Parsons, Aiken South Carolina.

[38] P-PZ-J-0002, *SWPF Process Building HVAC Confinement Zone and Pressurization Plan at EL 116'-0" (U)*. Parsons, Aiken South Carolina.

[39] P-PZ-J-0003, *SWPF Process Building HVAC Confinement Zone and Pressurization Plan at EL 124'-0" (U)*. Parsons, Aiken South Carolina.

[40] P-PZ-J-0004, *SWPF Process Building HVAC Confinement Zone and Pressurization Plan at EL 139'-0" (U)*. Parson, Aiken South Carolina.

[41] J-JZ-J-01006, *SWPF FI-4120 Stack Flowrate*. Parsons, Aiken, South Carolina.

[42] J-JZ-J-00933, *SWPF FI-6056, CCA AHU-008 Airflow*. Parsons, Aiken, South Carolina.

[43] M-MW-J-0007, *SWPF Process Building Cold Chemicals Area Air Flow and Control Diagram.* Parsons, Aiken, South Carolina.

[44] J-JZ-J-00934, *SWPF FI-6062 CCA AHU-009 Airflow*. Parsons, Aiken, South Carolina.

[45] J-JZ-J-00969, *SWPF FIC-4003 SSFT Cell Exhaust Airflow*. Parsons, Aiken, South Carolina.

[46] J-JZ-J-00974, *SWPF SWPF FIC-4013 SEHT Cell Exhaust Airflow*. Parsons, Aiken, South Carolina.

[47] J-JZ-J-00959, *SWPF FIC-4020 FFT-A Cell Exhaust Airflow*. Parsons, Aiken, South Carolina.

[48] J-JZ-J-00954, *SWPF FIC-4033 AST-A Cell Exhaust Airflow*. Parsons, Aiken, South Carolina.

[49] J-JZ-J-00919, *SWPF FIC-4043 ASDT Cell Airflow*. Parsons, Aiken, South Carolina.

[50] J-JZ-J-00964, *SWPF FIC-4053 SSRT/WWHT Cell Airflow*. Parsons, Aiken, South Carolina.

[51] J-JZ-J-00979, *SWPF FIC-4057 East CSSX TK Cell Airflow*. Parsons, Aiken, South Carolina.

[52] J-JZ-J-00986, *SWPF FIC-4063 West CSSX TK Cell Airflow*. Parsons, Aiken, South Carolina.

[53] J-JZ-J-01007, *SWPF FIC-4079 PB Exhaust Flowrate*. Parsons, Aiken, South Carolina.

[54] J-JZ-J-00896, *SWPF FIC-4113 PB HVAC AHU-001 Airflow*. Parsons, Aiken, South Carolina.

[55] J-JZ-J-00904, *SWPF FIC-4128 PB AHU-002 Airflow*. Parsons, Aiken, South Carolina.

[56] J-JZ-J-00926, *SWPF FIC-4133 PB AHU-003 Airflow*. Parsons, Aiken, South Carolina.

[57] J-JZ-J-00971, *SWPF PDI-4001 SSFT Cell Inlet FLT-010 Pre Filter dP*. Parsons, Aiken, South Carolina.

[58] J-JZ-J-00972, *SWPF PDI-4002 SSFT Cell Inlet FLT-010 HEPA dP*. Parsons, Aiken, South Carolina.

[59] J-JZ-J-00977, *SWPF PDI-4010 SEHT Cell Inlet FLT-011 HEPA dP*. Parsons, Aiken, South Carolina.

[60] J-JZ-J-00976, *SWPF PDI-4011 SEHT Cell Inlet FLT-011 Pre Filter dP*. Parsons, Aiken, South Carolina.

[61] J-JZ-J-00956, *SWPF PDI-4030 AST-A Cell Inlet FTL-013 HEPA dP*. Parsons, Aiken, South Carolina.

[62] J-JZ-J-00957, *SWPF PDI-4031 AST-A Cell Inlet FLT-013 Pre Filter dP*. Parsons, Aiken, South Carolina.

[63] J-JZ-J-00967, *SWPF PDI-4037 SSRT/WWHT Cell Inlet FLT-012 HEPA dP*. Parsons, Aiken, South Carolina.

[64] J-JZ-J-00998, *SWPF PDI-4039 PB FLT-004 Secondary HEPA dP*. Parsons, Aiken, South Carolina.

[65] J-JZ-J-00921, *SWPF PDI-4040 ASDT Cell Inlet FLT-014 HEPA dP*. Parsons, Aiken, South Carolina.

[66] J-JZ-J-00922, *SWPF PDI-4041 ASDT Cell Inlet FLT-014 Pre Filter dP*. Parsons, Aiken, South Carolina.

[67] J-JZ-J-00966, *SWPF PDI-4051 SSRT/WWHT Cell Inlet FLT-012 Pre Filter dP*. Parsons, Aiken, South Carolina.

[68] J-JZ-J-00981, *SWPF PDI-4061 CSSX TK Cell FLT-015 Pre Filter dP*. Parsons, Aiken, South Carolina.

[69] J-JZ-J-00961, *SWPF PDI-4066 FFT-A Cell Inlet FLT-016 Pre Filter dP*. Parsons, Aiken, South Carolina.

[70] J-JZ-J-00999, *SWPF PDI-4068 PB FLT-001 HEPA dP*. Parsons, Aiken, South Carolina.

[71] J-JZ-J-01000, *SWPF PDI-4075 PB FLT-003 HEPA dP*. Parsons, Aiken, South Carolina.

[72] J-JZ-J-00982, *SWPF PDI-4076 CSSX Tk Cell FLT-015 HEPA dP*. Parsons, Aiken, South Carolina.

[73] J-JZ-J-01008, *SWPF PDI-4077 PB Exhaust Fan dP*. Parsons, Aiken, South Carolina.

[74] J-JZ-J-00962, *SWPF PDI-4085 FFT-A Cell Inlet FLT-016 HEPA dP*. Parsons, Aiken, South Carolina.

[75] J-JZ-J-00989, *SWPF PDI-4087 PB HEPA Header Vacuum.* Parsons, Aiken, South Carolina.

[76] J-JZ-J-00950, *SWPF PDI-4090 CSSX and South ASP P&V Corr Vacuum.* Parsons, Aiken, South Carolina.

[77] J-JZ-J-00948, *SWPF PDI-4091 Contactor Operating Deck Vacuum*. Parsons, Aiken, South Carolina.

[78] J-JZ-J-01001, *SWPF PDI-4108 PB FLT-002 HEPA dP*. Parsons, Aiken, South Carolina.

[79] J-JZ-J-00898, *SWPF PDI-4111 PB AHU-001 Pre Filter dP*. Parsons, Aiken, South Carolina.

[80] J-JZ-J-00899, *SWPF PDI-4112 PB AHU-001 Final Filter dP*. Parsons, Aiken, South Carolina.

[81] J-JZ-J-00902, *SWPF PDI-4125 PB AHU-002 Pre Filter dP*. Parsons, Aiken, South Carolina.

[82] J-JZ-J-00903, *SWPF PDI-4126 PB AHU-002 Final Filter dP*. Parsons, Aiken, South Carolina.

[83] J-JZ-J-00927, *SWPF PDI-4131 PB AHU-003 Pre Filter dP*. Parsons, Aiken, South Carolina.

[84] J-JZ-J-00928, *SWPF PDI-4132 PB AHU-003 Final Filter dP*. Parsons, Aiken, South Carolina.

[85] J-JZ-J-00951, *SWPF PDI-4241 North ASP P&V Corr Vacuum.* Parsons, Aiken, South Carolina.

[86] J-JZ-J-00952, *SWPF PDI-4242 Drum Off/Decon Area Vacuum.* Parsons, Aiken, South Carolina.

[87] J-JZ-J-00945, *SWPF PDIC-4321 Lab Entry & East/South Lab Corridor Vacuum.* Parsons, Aiken, South Carolina.

[88] J-JZ-J-00935, *SWPF PDI-6052 CCA AHU-008 Pre Filter/Filter dP*. Parsons, Aiken, South Carolina.

[89] J-JZ-J-00936, *SWPF PDI-6058 CCA AHU-009 Pre Filter/Filter dP*. Parsons, Aiken, South Carolina.

[90] J-JZ-J-00970, *SWPF PDIC-4008 SSFT Cell Vacuum.* Parsons, Aiken, South Carolina.

[91] J-JZ-J-00975, *SWPF PDIC-4012 SEHT Cell Vacuum.* Parsons, Aiken, South Carolina.

[92] J-JZ-J-00955, *SWPF PDIC-4032 AST-A Cell Vacuum.* Parsons, Aiken, South Carolina.

[93] J-JZ-J-00920, *SWPF PDIC-4042 ASDT Cell Vacuum.* Parsons, Aiken, South Carolina.

[94] J-JZ-J-00965, *SWPF PDIC-4052 SSRT/WWHT Cell Vacuum.* Parsons, Aiken, South Carolina.

[95] J-JZ-J-00980, *SWPF PDIT-4062A West CSSX Cell Vacuum.* Parsons, Aiken, South Carolina.

[96] J-JZ-J-00987, *SWPF PDIT-4062B East CSSX Cell Vacuum.* Parsons, Aiken, South Carolina.

[97] J-JZ-J-00960, *SWPF PDIC-4067 FFT-A Cell Vacuum.* Parsons, Aiken, South Carolina.

[98] J-JZ-J-00994, *SWPF PDI-4038 PB FLT-004 Primary HEPA dP*. Parsons, Aiken, South Carolina.

[99] J-JZ-J-00990, *SWPF PDI-4047 PB FLT-004 Pre Filter dP*. Parsons, Aiken, South Carolina.

[100] J-JZ-J-00991, *SWPF PDI-4071 PB FLT-002 Pre Filter dP*. Parsons, Aiken, South Carolina.

[101] J-JZ-J-00992, *SWPF PDI-4072 PB FLT-001 Pre Filter dP*. Parsons, Aiken, South Carolina.

[102] J-JZ-J-00993, *SWPF PDI-4073 PB FLT-003 Pre Filter dP*. Parsons, Aiken, South Carolina.

[103] J-JZ-J-00995, *SWPF PDI-4074 PB FLT-003 Primary HEPA dP*. Parsons, Aiken, South Carolina.

[104] J-JZ-J-00996, *SWPF PDI-4089 PB FLT-001 Primary HEPA dP*. Parsons, Aiken, South Carolina.

[105] J-JZ-J-00997, *SWPF PDI-4109 PB FLT-002 Primary HEPA dP*. Parsons, Aiken, South Carolina.

[106] J-JZ-J-00929, *SWPF PI-4093 HRS Return Pressure.* Parsons, Aiken, South Carolina.

[107] J-JZ-J-00988, *SWPF RI-4015 Process Vessel Dark Cell Exhaust CAM.* Parsons, Aiken, South Carolina.

[108] J-JZ-J-00985, *SWPF RI-4059 South ASP & CSSX Corridor & Labyrinths CAM.* Parsons, Aiken, South Carolina.

[109] J-JZ-J-01010, *SWPF RI-4121 Exhaust Stack CAM.* Parsons, Aiken, South Carolina.

[111] J-JZ-J-01330, *SWPF SIC-4079A PB Exhaust FAN-001 Speed.* Parsons, Aiken, South Carolina.

[112] J-JZ-J-01331, *SWPF SIC-4079B PB Exhaust FAN-002 Speed.* Parsons, Aiken, South Carolina.

[113] J-JZ-J-01328, *SWPF SIC-4105A HRS P-007A Speed.* Parsons, Aiken, South Carolina.

[114] J-JZ-J-01329, *SWPF SIC-4105B HRS P-007B Speed.* Parsons, Aiken, South Carolina.

[115] J-JZ-J-00973, *SWPF TI-4004 SSFT Cell Exhaust Air Temp*. Parsons, Aiken, South Carolina.

[116] J-JZ-J-00978, *SWPF TI-4014 SEHT Cell Exhaust Air Temp.* Parsons, Aiken, South Carolina.

[117] J-JZ-J-00963, *SWPF TI-4021 FFT-A Cell Exhaust Air Temp.* Parsons, Aiken, South Carolina.

[118] J-JZ-J-00958, *SWPF TI-4034 AST-A Cell Exhaust Air Temp.* Parsons, Aiken, South Carolina.

[119] J-JZ-J-00923, *SWPF TI-4044 ASDT Cell Exhaust AirTemperature.* Parsons, Aiken, South Carolina.

[120] J-JZ-J-00968, *SWPF TI-4054 SSRT/WWHT Cell Exhaust Air Temp*. Parsons, Aiken, South Carolina.

[121] J-JZ-J-00983, *SWPF TI-4058 East CSSX TK Cell Exhaust Air Temp.* Parsons, Aiken, South Carolina.

[122] J-JZ-J-00984, *SWPF TI-4064 West CSSX TK Cell Exhaust Air Temp*. Parsons, Aiken, South Carolina.

[123] J-JZ-J-00932, *SWPF, TIC-4069 Mechanical Room Temp.* Parsons, Aiken, South Carolina.

[124] J-JZ-J-00942, *SWPF TIC-4083 DOE Office Temp.* Parsons, Aiken, South Carolina.

[125] J-JZ-J-00949, *SWPF TIC-4086 Operating Deck Temp*. Parsons, Aiken, South Carolina.

[126] J-JZ-J-00947, *TIC-4088 Process Building Exhaust Fan Room Temp.* Parsons, Aiken, South Carolina.

[127] J-JZ-J-00946, *SWPF TIC-4096 Organic Lab Temp*. Parsons, Aiken, South Carolina.

[128] J-JZ-J-00943, *SWPF TIC-4097 Calibration Room Temp.* Parsons, Aiken, South Carolina.

[129] J-JZ-J-00944, *SWPF TIC-4098 Truck Bay Temp.* Parsons, Aiken, South Carolina.

[130] J-JZ-J-00900, *SWPF TIC-4100A Dark Cell Exhaust Temp.* Parsons, Aiken, South Carolina.

[131] J-JZ-J-00901, *SWPF TIC-4100B Occupied Spaces Temp.* Parsons, Aiken, South Carolina.

[132] J-JZ-J-00939, *SWPF TIC-6054 Cold Chemicals Work Area Temp.* Parsons, Aiken, South Carolina.

[133] J-JZ-J-00940, *SWPF TIC-6065 CCA Operator Station Temp*. Parsons, Aiken, South Carolina.

[134] M-MW-J-0023, *SWPF Process Building Alpha Finishing Facility Air Flow and Control Diagram (U)*. Parsons, Aiken, South Carolina.

[135] M-M6-J-0141, *Alpha Finishing Facility Process Vessel Vent System P&ID (U)*. Parsons, Aiken, South Carolina.

[136] J-JZ-J-01021, *SWPF FIC-4170 AFF Exhaust Airflow*. Parsons, Aiken, South Carolina.

[137] J-JZ-J-01022, *SWPF PDI-4119 AFF Exhaust FLT-007 Pre Filter dP*. Parsons, Aiken, South Carolina.

[138] J-JZ-J-01023, *SWPF PDI-4124 AFF Exhaust FLT-007 Primary HEPA dP*. Parsons, Aiken, South Carolina.

[139] J-JZ-J-01025, *SWPF PDI-4161 AFF AHU-006 Pre Filter dP*. Parsons, Aiken, South Carolina.

[140] J-JZ-J-01026, *SWPF PDI-4162 AFF AHU-006 Final Filter dP*. Parsons, Aiken, South Carolina.

[141] J-JZ-J-01024, *SWPF PDI-4224 AFF Exhaust Secondary HEPA dP*. Parsons, Aiken, South Carolina.

[142] J-JZ-J-01028, *SWPF PI-4173 FAN-005 Vacuum*. Parsons, Aiken, South Carolina.

[143] J-JZ-J-01029, *SWPF PI-4174 FAN-006 Vacuum*. Parsons, Aiken, South Carolina.

[144] J-JZ-J-01339, *SWPF SIC-4170A AFF FAN-005 Speed*. Parsons, Aiken, South Carolina.

[145] J-JZ-J-01340, *SWPF SIC-4170B AFF FAN-006 Speed*. Parsons, Aiken, South Carolina.

[146] J-JZ-J-01030, *SWPF TIC-4165 AFF Process Area Temp*. Parsons, Aiken, South Carolina.

[147] J-JZ-J-01383, *SWPF PDI-2254 AFF PVVS Header d*. Parsons, Aiken, South Carolina.

[148] P-PG-J-0005, *SWPF Process Building General Arrangements Northern Facility Support Area Plan at Elevation 100'-0" (U)*.. Parsons, Aiken, South Carolina.

[149] M-MW-J-0022, *SWPF Process Building Control Room Air Flow and Control Diagram (U)*.. Parsons, Aiken, South Carolina.

[150] M-M6-J-0099, *SWPF Process Building Control Room Chiller Units CHU-003A/B P&ID (U)*. Parsons, Aiken, South Carolina.

[151] J-JZ-J-01013, *SWPF FI-4158 CR Airflow*. Parsons, Aiken, South Carolina.

[152] J-JZ-J-01014, *SWPF PDI-4152 CR AHU-004 Pre Filter dP*. Parsons, Aiken, South Carolina.

[153] J-JZ-J-01015, *SWPF PDI-4153 CR AHU-005 Pre Filter dP*. Parsons, Aiken, South Carolina.

[154] J-JZ-J-01016, *SWPF PDI-4154 CR AHU-004 Final Filter dP*. Parsons, Aiken, South Carolina.

[155] J-JZ-J-01017, *SWPF PDI-4155 CR AHU-005 Final Filter dP*. Parsons, Aiken, South Carolina.

[156] J-JZ-J-01018, *SWPF PDI-4160 Control Room Pressure*. Parsons, Aiken, South Carolina.

[157] J-JZ-J-01019, *SWPF TI-4317 UPS Room Temp*. Parsons, Aiken, South Carolina.

[158] J-JZ-J-01336, *SWPF TIC-4159 IT Server Room Temperature*. Parsons, Aiken, South Carolina.

[159] J-JZ-J-01337, *SWPF TIC-4303 Control Room Temperature*. Parsons, Aiken, South Carolina.

[160] J-JZ-J-01338, *SWPF TIC-4304 Shift Supervisor Office Temperature*. Parsons, Aiken, South Carolina.

[161] J-JZ-J-00859, *SWPF FI-4275 Control Room Chilled Water Supply Flowrate*. Parsons, Aiken, South Carolina.

[162] J-JZ-J-00860, *SWPF PI-4261 Control Room Chilled Water Return Pressure*. Parsons, Aiken, South Carolina.

[163] J-JZ-J-00861, *SWPF TI-4279 Control Room Chilled Water Supply Temperature*. Parsons, Aiken, South Carolina.

[164] M-M6-J-0199, *SWPF Process Building Process Vessel Vent Exhaust FAN-401A/B P&ID (U)*. Parsons, Aiken, South Carolina.

[165] M-M6-J-0198, *SWPF Process Building Process Vessel Vent System P&ID (U)*. Parsons, Aiken, South Carolina.

[166] M-M6-J-0087, *SWPF Process Building Process Vessel Vent System P&ID (U)*. Parsons, Aiken, South Carolina.

[167] M-M6-J-0129, *SWPF Process Building Process Vessel Vent Header P&ID (U)*. Parsons, Aiken South Carolina.

[168] M-M6-J-0059 SH1, *SWPF Process Building Contactor Vent Header P&ID (U)*. Parsons, Aiken South Carolina.

[169] M-M6-J-0059 SH2, *SWPF Process Building Contactor Vent Header P&ID (U)*. Parsons, Aiken South Carolina.

[170] J-JZ-J-00582, *SWPF FI-4199 PVV Exhaust Airflow*. Parsons, Aiken, South Carolina.

[171] J-JZ-J-00888, *SWPF PDI-4183 PVV Exhaust Fan A dP*. Parsons, Aiken, South Carolina.

[172] J-JZ-J-00889, *SWPF PDI-4188 PVV Exhaust Fan B dP*. Parsons, Aiken, South Carolina.

[173] J-JZ-J-01315, *SWPF SIC-4199A PVVS FAN-401A Speed.* Parsons, Aiken, South Carolina.

[174] J-JZ-J-01316, *SWPF SIC-4199B PVVS FAN-401B Speed.* Parsons, Aiken, South Carolina.

[175] J-JZ-J-00881, *SWPF PDI-4197 PVV Moisture Removal Train B dP.* Parsons, Aiken, South Carolina.

[176] J-JZ-J-00882, *SWPF PDI-4202 PVV FLT-401B Pre Filter dP.* Parsons, Aiken, South Carolina.

[177] J-JZ-J-00883, *SWPF PDI-4203 PVV FLT-401B Primary HEPA dP.* Parsons, Aiken, South Carolina.

[178] J-JZ-J-00884, *SWPF PDI-4204 PVV FLT-401B HEPA dP.* Parsons, Aiken, South Carolina.

[179] J-JZ-J-00885, *SWPF RI-4187 PVV HEPA B Exhaust CAM.* Parsons, Aiken, South Carolina.

[180] J-JZ-J-00886, *SWPF TIC-4189 PVV Cooler B Outlet Temp.* Parsons, Aiken, South Carolina.

[181] J-JZ-J-00887, *SWPF TIC-4192 PVV Heater B Outlet Temp.* Parsons, Aiken, South Carolina.

[182] J-JZ-J-00825, *SWPF PDI-4167 PVV FLT-401A Pre Filter dP.* Parsons, Aiken, South Carolina.

[183] J-JZ-J-00826, *SWPF PDI-4168 PVV FLT-401A Primary HEPA dP.* Parsons, Aiken, South Carolina.

[184] J-JZ-J-00827, *SWPF PDI-4169 PVV Secondary HEPA A dP.* Parsons, Aiken, South Carolina.

[185] J-JZ-J-00828, *SWPF PDI-4194 PVV Moisture Removal Train A dP.* Parsons, Aiken, South Carolina.

[186] J-JZ-J-00829, *SWPF PDIC-4191 PVV Header Vacuum.* Parsons, Aiken, South Carolina.

[187] J-JZ-J-00830, *SWPF RI-4182 PVV HEPA A Exhaust CAM.* Parsons, Aiken, South Carolina.

[188] J-JZ-J-00831, *SWPF TI-4184 PVV Cooler Inlet Temp.* Parsons, Aiken, South Carolina.

[189] J-JZ-J-00832, *SWPF TIC-4196 PVV Cooler A Outlet Temp.* Parsons, Aiken, South Carolina.

[190] J-JZ-J-00833, *SWPF TIC-4198 PVV Heater A Outlet Temp.* Parsons, Aiken, South Carolina.

[191] M-M6-J-0027 SH1, *SWPF Process Building Pulse Mixer Enclosure A P&ID (U).* Parsons. Aiken, South Carolina.

[192] M-M6-J-0027 SH2, *SWPF Process Building Pulse Mixer Enclosure A P&ID (U),*. Parsons. Aiken, South Carolina.

[193] M-M6-J-0187, *SWPF Process Building Pulse Mixer Vent System P&ID (U)*. Parsons, Aiken, South Carolina.

[194] M-M6-J-0188, *SWPF Process Building Pulse Mixer Vent Exhaust Fans Fan 402A/B P&ID (U*. Parsons, Aiken, South Carolina.

[195] M-M6-J-0028 SH1, *SWPF Process Building Pulse Mixer Enclosure B P&ID (U).* Parsons. Aiken, South Carolina.

[196] M-M6-J-0028 SH2, *SWPF Process Building Pulse Mixer Enclosure B P&ID (U).* Parsons. Aiken, South Carolina.

[197] M-M6-J-0029, *SWPF Process Building Pulse Mixer Enclosure C P&ID (U).* Parsons. Aiken, South Carolina.

[198] M-M6-J-0088, *SWPF Process Building Pulse Mixer Vent System P&ID (U)*. Parsons, Aiken, South Carolina.

[199] J-JZ-J-00869, *SWPF PDI-4140 PMV FLT-402C Primary HEPA dP* 1. Parsons, Aiken, South Carolina.

[200] J-JZ-J-00871, *SWPF PDI-4141 PMV FLT-402C Secondary HEPA dP*. Parsons, Aiken, South Carolina.

[201] J-JZ-J-00873, *SWPF PDI-4145 PMV FLT-402C Pre Filter dP*. Parsons, Aiken, South Carolina.

[202] J-JZ-J-00874, *SWPF PDI-4146 PMV FLT-402D Pre filter dP*. Parsons, Aiken, South Carolina.

[203] J-JZ-J-00875, *SWPF PDI-4171 PMV Moisture Removal train B dP*. Parsons, Aiken, South Carolina.

[204] J-JZ-J-00870, *SWPF PDI-4178 PMV FLT-402D Primary HEPA dP*. Parsons, Aiken, South Carolina.

[205] J-JZ-J-00872, *SWPF PDI-4179 PMV FLT-402D Secondary HEPA dP*. Parsons, Aiken, South Carolina.

[206] J-JZ-J-00876, *SWPF RI-4147 PMV HEPA C/D Exhaust CAM*. Parsons, Aiken, South Carolina.

[207] J-JZ-J-00877, *SWPF TIC-4138 PMV Heater B Outlet Temp*. Parsons, Aiken, South Carolina.

[208] J-JZ-J-00878, *SWPF TIC-4149 PMV Cooler B Outlet Temp*. Parsons, Aiken, South Carolina.

[209] J-JZ-J-00879, *SWPF PDI-4175 PMV Exhaust Fan A dP*. Parsons, Aiken, South Carolina.

[210] J-JZ-J-00880, *SWPF PDI-4176 PMV Exhaust Fan B dP*. Parsons, Aiken, South Carolina.

[211] J-JZ-J-01302, *SWPF SIC-4139A PMVS Fan-402A Speed.* Parsons, Aiken, South Carolina.

[212] J-JZ-J-01303, *SWPF SIC-4139B PMVS Fan-402B Speed.* Parsons, Aiken, South Carolina.

[213] J-JZ-J-00197, *SWPF LI-4525 Pulse Mixer Vent Heater Drain Loop Seal Level*. Parsons, Aiken, South Carolina.

[214] J-JZ-J-00834, *SWPF PDI-4115 PMV FLT-402A Pre Filter dP*. Parsons, Aiken, South Carolina.

[215] J-JZ-J-00835, *SWPF PDI-4116 PMV FLT-402A Primary HEPA dP*. Parsons, Aiken, South Carolina.

[216] J-JZ-J-00836, *SWPF PDI-4117 PMV FLT-402A Secondary HEPA dP*. Parsons, Aiken, South Carolina.

[217] J-JZ-J-00837, *SWPF PDI-4172 PMV Moisture Removal Train A dP*. Parsons, Aiken, South Carolina.

[218] J-JZ-J-00838, *SWPF PDI-4205 PMV FLT-402B Pre Filter dP*. Parsons, Aiken, South Carolina.

[219] J-JZ-J-00839, *SWPF PDI-4206 PMV FLT-402B Primary HEPA dP*. Parsons, Aiken, South Carolina.

[220] J-JZ-J-00840, *SWPF PDI-4207 PMV FLT-402B Secondary HEPA dP*. Parsons, Aiken, South Carolina.

[221] J-JZ-J-00841, *SWPF PDIC-4139 PMV Header Vacuum.* Parsons, Aiken, South Carolina.

[222] J-JZ-J-00842, *SWPF RI-4142 PMV HEPA A/B Exhaust CAM.* Parsons, Aiken, South Carolina.

[223] J-JZ-J-00843, *SWPF TI-4177 PMV Cooler Inlet Temp.* Parsons, Aiken, South Carolina.

[224] J-JZ-J-00844, *SWPF TIC-4135 PMV Cooler A Outlet Temp*. Parsons, Aiken, South Carolina.

[225] J-JZ-J-00845, *SWPF TIC-4143 PMV Heater A Outlet Temp*. Parsons, Aiken, South Carolina.

[226] M-MW-J-0005, *SWPF Process Building HVAC Heat Recovery System Air Flow and Control Diagram (U)*. Parsons, Aiken, South Carolina.

[227] ASHRAE 110-R, *Method of Testing Performance of Laboratory Fume Hoods*. American Society of Heating, Refrigeration, and Air Conditioning Engineers, Inc. 1995.

[228] M-MW-J-0025, *SWPF Process Building Building Supply Air Organic Laboratory Air Flow and Control Diagram (U)*. Parsons, Aiken South Carolina.

[229] M-MW-J-0026, *SWPF Process Building Building Supply Air Inorganic Laboratory Air Flow and Control Diagram (U)*. Parsons, Aiken South Carolina.

[230] M-MW-J-0027, *SWPF Process Building Building Supply Air Radiochemistry Laboratory Air Flow and Control Diagram (U)*. Parsons, Aiken South Carolina.

[231] M-MW-J-0028, *SWPF Process Building Building Supply Air Radiochemistry Laboratory Air Flow and Control Diagram (U)*. Parsons, Aiken South Carolina.

[232] M-MW-J-0029, *SWPF Process Building Building Supply Air Hot Laboratory Air Flow and Control Diagram (U)*. Parsons, Aiken South Carolina.

[233] M-MW-J-0030, *SWPF Process Building Analytical Laboratory Radio Hood Exhaust Air Header, Air Flow and Control Diagram (U)*. Parsons, Aiken South Carolina.

[234] M-MW-J-00031, *SWPF Process Building Analytical Laboratory HEPA Filter Exhaust Air Flow and Control Diagram (U)*. Parsons, Aiken South Carolina.

[235] M-MW-J-00032, *SWPF Process Building Analytical Laboratory HEPA Filter Exhaust Air Flow and Control Diagram (U)*. Parsons, Aiken South Carolina.

[236] M-MW-J-00035, *SWPF Process Building Analytical Laboratory Glove Box Exhaust Air Header Air Flow and Control Diagram (U*. Parsons, Aiken South Carolina.

[237] J-JZ-J-01031, *SWPF AI-1121A Laboratory count Room Oxygen*. Parsons, Aiken, South Carolina.

[238] J-JZ-J-01032, *SWPF AI-1121B Laboratory Count Room Oxygen*. Parsons, Aiken, South Carolina.

[239] J-JZ-J-01060, *SWPF FI-4601 Radio Hood 1 Air Velocity*. Parsons, Aiken, South Carolina.

[240] J-JZ-J-01061, *SWPF FI-4602 Radio Hood 2 Air Velocity*. Parsons, Aiken, South Carolina.

[241] J-JZ-J-01048, *SWPF FI-4603 Radio Hood 3 Air Velocity.* Parsons, Aiken, South Carolina.

[242] J-JZ-J-01049, *SWPf FI-4604 Radio Hood 4 Air Velocity.* Parsons, Aiken, South Carolina.

[243] J-JZ-J-01050, *SWPF FI-4605 Radio Hood 5 Air Velocity.* Parsons, Aiken, South Carolina.

[244] J-JZ-J-01051, *SWPF FI-4606 Radio Hood 6 Velocity.* Parsons, Aiken, South Carolina.

[245] J-JZ-J-01039, *SWPF FI-4607 Radio Hood 7 Air Velocity.* Parsons, Aiken, South Carolina.

[246] J-JZ-J-01040, *SWPF FI-4608 Radio Hood 8 Air Velocity.* Parsons, Aiken, South Carolina.

[247] J-JZ-J-01041, *SWPF FI-4609 Radio Hood 9 Air Velocity*. Parsons, Aiken, South Carolina.

[248] J-JZ-J-01042, *SWPF FI-4610 Radio Hood 10 Air Velocity.* Parsons, Aiken, South Carolina.

[249] J-JZ-J-01043, *SWPF FI-4611 Radio Hood 11 Air Velocity.* Parsons, Aiken, South Carolina.

[250] J-JZ-J-01033, *SWPF FI-4612 Radio Hood 12 Air Velocity.* Parsons, Aiken, South Carolina.

[251] J-JZ-J-01034, *SWPF FI-4613 Radio Hood 13 Air Velocity.* Parsons, Aiken, South Carolina.

[252] J-JZ-J-01035, *SWPF FI-4614 Radio Hood 14 Air Velocity.* Parsons, Aiken, South Carolina.

[253] J-JZ-J-01036, *SWPF FI-4615 Radio Hood 15 Air Velocity.* Parsons, Aiken, South Carolina.

[254] J-JZ-J-01037, *SWPF FI-4616 Radio Hood 16 Air Velocity.* Parsons, Aiken, South Carolina.

[255] J-JZ-J-01038, *SWPF FI-4617 Radio Hood 17 Air Velocity.* Parsons, Aiken, South Carolina.

[256] J-JZ-J-00911, *SWPF FIC-4330 Lab Exhaust Airflow*. Parsons, Aiken, South Carolina.

[257] J-JZ-J-00918, *SWPF FIC-4381 Lab Hot Cell Exhaust Airflow*. Parsons, Aiken, South Carolina.

[258] J-JZ-J-01319, *SWPF LI-4327 Analytical Lab SCFS Level.* Parsons, Aiken, South Carolina.

[259] J-JZ-J-01323, *SWPF LI-4397 Hot Cell SCFS Level.* Parsons, Aiken, South Carolina.

[260] J-JZ-J-00905, *SWPF PDI-4318 Analytical Lab FLT-009 Pre Filter dP*. Parsons, Aiken, South Carolina.

[261] J-JZ-J-00907, *SWPF PDI-4319 Analytical Lab FLT-009 Primary HEPA dP*. Parsons, Aiken, South Carolina.

[262] J-JZ-J-00909, *SWPF PDI-4320 Analytical Lab FLT-009 Secondary HEPA dP*. Parsons, Aiken, South Carolina.

[263] J-JZ-J-00906, *SWPF PDI-4322 Analytical Lab FLT-017 Pre Filter dP*. Parsons, Aiken, South Carolina.

[264] J-JZ-J-00908, *SWPF PDI-4323 Analytical Lab FLT-017 Primary HEPA dP*. Parsons, Aiken, South Carolina.

[265] J-JZ-J-00910, *SWPF PDI-4324 Analytical Lab FLT-017 Secondary HEPA dP*. Parsons, Aiken, South Carolina.

[266] J-JZ-J-01044, *SWPF PDI-4342 GB-010 Intake Filter dP*. Parsons, Aiken, South Carolina.

[267] J-JZ-J-01046, *SWPF PDI-4344 GB-011 Intake Filter dP*. Parsons, Aiken, South Carolina.

[268] J-JZ-J-01052, *SWPF PDI-4352 GB-007 Intake Filter dP*. Parsons, Aiken, South Carolina.

[269] J-JZ-J-01056, *SWPF PDI-4356 GB-009 Intake Filter dP*. Parsons, Aiken, South Carolina.

[270] J-JZ-J-01058, *SWPF PDI-4359 GB-008 Vacuum.* Parsons, Aiken, South Carolina.

[271] J-JZ-J-01059, *SWPF PDI-4360 GB-009 Vacuum.* Parsons, Aiken, South Carolina.

[272] J-JZ-J-01062, *SWPF PDI-4361 GB-006 Intake Filter dP*. Parsons, Aiken, South Carolina.

[273] J-JZ-J-01063, *SWPF PDI-4363 GB-005 Intake Filter dP*. Parsons, Aiken, South Carolina.

[274] J-JZ-J-01071, *SWPF PDI-4367 GB-003 Intake Filter dP*. Parsons, Aiken, South Carolina.

[275] J-JZ-J-01067, *SWPF PDI-4371 GB-001 Intake Filter dP*. Parsons, Aiken, South Carolina.

[276] J-JZ-J-01074, *SWPF PDI-4374 Hot Cell Vacuum.* Parsons, Aiken, South Carolina.

[277] J-JZ-J-01078, *SWPF PDI-4379 Hot Lab Exhaust FLT-020 Pre Filter dP*. Parsons, Aiken, South Carolina.

[278] J-JZ-J-01079, *SWPF PDI-4380 Hot Lab Exhaust FLT-020 HEPA dP*. Parsons, Aiken, South Carolina.

[279] J-JZ-J-00913, *SWPF PDI-4383 Lab Hot Cell FLT-021 Pre Filter dP*. Parsons, Aiken, South Carolina.

[280] J-JZ-J-01089, *PDIC-4384 Lab Hot Cell Exhaust FLT-021 Primary HEPA dP*. Parsons, Aiken, South Carolina.

[281] J-JZ-J-00914, *SWPF PDI-4385 Lab Hot Cell FLT-022 Pre Filter dP*. Parsons, Aiken, South Carolina.

[282] J-JZ-J-00915, *SWPF-PDI-4386 Lab Hot Cell FLT-022 Primary HEPA dP*. Parsons, Aiken, South Carolina.

[283] J-JZ-J-00916, *SWPF PDI-4387 Lab Hot Cell FLT-021 HEPA dP*. Parsons, Aiken, South Carolina.

[284] J-JZ-J-00917, *SWPF PDI-4388 Lab Hot Cell FLT-022 HEPA dP*. Parsons, Aiken, South Carolina.

[285] J-JZ-J-00924, *SWPF PDI-4618 Sample Xfer System Intake Filter dP*. Parsons, Aiken, South Carolina.

[286] J-JZ-J-00912, *SWPF PDI-4330 Lab Exhaust Vacuum*. Parsons, Aiken, South Carolina.

[287] J-JZ-J-01077, *SWPF PDIC-4382 Lab Hot Cells Vacuum*. Parsons, Aiken, South Carolina.

[288] A-A2-J-0022, SWPF Next Generation Solvent Building Architectural Floor Plan at Elevation 98'-9"

[289] A-A2-J-00041, *SWPF Next Generation Solvent Building Architectural Roof Plan at Elevation 123'-9"*

[290] A-A5-J-0005, *SWPF Process Building Architectural Louver Schedule and Details*

[291] M-MX-J-0002, *SWPF HVAC Mechanical Equipment Schedules*