# SALT WASTE PROCESSING FACILITY

# DOCUMENTED SAFETY ANALYSIS

**Doc. No.:** **S-SAR-J-00002**
**Revision:** **1**
**Date:** **09/23/2019**

This page intentionally left blank.

## SIGNATURE PAGE

Jim Mullaney
SWPF Deputy Nuclear Safety Manager

9/20/19
Date

Bill Brasel
SWPF Deputy Director of Engineering/
Engineering Integration Manager

9/20/19
Date

Mike Pittman
SWPF Director of Plant Operations/
Plant Manager

9/21/19
Date

Dr. Thomas D. Burns, Jr., P.E.
SWPF Deputy Project Manager/
Director of Engineering

9/23/19
Date

Frank Sheppard, Jr.
SWPF Project Manager

9/23/19
Date

This page intentionally left blank.

## SUMMARY OF CHANGES

| Revision No. | Date | Description of Change |
|---|---|---|
| 0 | 10/04/2018 | Develop per DMR-1886. Initial Issuance. |
| 1 | 09/23/2019 | Revise per SBCN 2019-002 and SBCN 2019-004. |

# TABLE OF CONTENTS

**ES** EXECUTIVE SUMMARY

**1.0** SITE CHARACTERISTICS FOR THE SALT WASTE PROCESSING FACILITY

**2.0** FACILITY DESCRIPTION

**3.0** HAZARD AND ACCIDENT ANALYSES

**4.0** SAFETY STRUCTURES, SYSTEMS, AND COMPONENTS

**5.0** DERIVATION OF TECHNICAL SAFETY REQUIREMENTS

**6.0** PREVENTION OF INADVERTENT CRITICALITY

**7.0** RADIATION PROTECTION

**8.0** HAZARDOUS MATERIAL PROTECTION

**9.0** RADIOACTIVE, HAZARDOUS, AND MIXED WASTE MANAGEMENT

**10.0** INITIAL TESTING, IN-SERVICE SURVEILLANCE, AND MAINTENANCE

**11.0** OPERATIONAL SAFETY

**12.0** PROCEDURES AND TRAINING

**13.0** HUMAN FACTORS

**14.0** QUALITY ASSURANCE

**15.0** EMERGENCY PREPAREDNESS PROGRAM

**16.0** DECONTAMINATION AND DECOMMISSIONING

**17.0** MANAGEMENT ORGANIZATION AND INSTITUTIONAL SAFETY PROVISIONS

# SWPF DOCUMENTED SAFETY ANALYSIS

# EXECUTIVE SUMMARY

This page intentionally left blank.

# TABLE OF CONTENTS

**ES-1.0 EXECUTIVE SUMMARY ..... 1.1-1**

**ES-1.1 Introduction ..... 1.1-1**
**ES-1.2 Facility Background and Mission ..... 1.2-1**
**ES-1.3 Facility Overview ..... 1.3-1**
**ES-1.4 Facility Hazard Category ..... 1.4-1**
**ES-1.5 Hazard Analysis and Accident Analysis Summary ..... 1.5-1**
**ES-1.6 Organizational Structure ..... 1.6-1**
**ES-1.7 Safety Basis Adequacy ..... 1.7-1**
**ES-1.8 Documented Safety Analysis Structure and Content ..... 1.8-1**
**ES-1.9 Tables ..... 1.9-1**
**ES-1.10 References ..... 1.10-1**

## List of Tables

**Table ES-1.9-1. Summary of Results of Consequence Assessments ..... 1.9-1**
**Table ES-1.9-2. 10 CFR 830.204 (b) Criteria Implementation ..... 1.9-2**

# LIST OF ACRONYMS AND ABBREVIATIONS

| | |
|---|---|
| AFF | Alpha Finishing Facility |
| AFP | Alpha Finishing Process |
| ASP | Alpha Strike Process |
| CFR | Code of Federal Regulations |
| Cs | Cesium |
| CSP | Criticality Safety Program |
| CSSX | Caustic-Side Solvent Extraction |
| DBA | Design Basis Accident |
| DOE | U.S. Department of Energy |
| DSA | Documented Safety Analysis |
| DSS | Decontaminated Salt Solution |
| DWPF | Defense Waste Processing Facility |
| EG | Evaluation Guideline |
| EPC | Engineering, Procurement, and Construction |
| FTF | F-Area Tank Farm |
| HA | Hazard Analysis |
| HC | Hazard Category |
| HTF | H-Area Tank Farm |
| LW | Liquid Waste |
| m | Meter |
| Mgal | Million Gallons |
| MOI | Maximally Exposed Offsite Individual |
| MST | Monosodium Titanate |
| rem | Roentgen Equivalent Man |
| SC | Safety Class |
| SPF | Saltstone Production Facility |
| Sr | Strontium |
| SRS | Savannah River Site |
| SS | Safety Significant |
| SSC | Structures, Systems, and Components |
| SWPF | Salt Waste Processing Facility |

# ES-1.0 EXECUTIVE SUMMARY

## ES-1.1 Introduction

This Documented Safety Analysis (DSA) meets the requirements of Title 10 Code of Federal Regulations (CFR), Part 830, Subpart B, Section 204, *Documented safety analysis*[1], and satisfies the Salt Waste Processing Facility (SWPF) Contract (DE-AC09-02SR22210, *Design, Construction, and Commissioning of a Salt Waste Processing Facility [SWPF]*[2]) requirement to submit a DSA to the U.S. Department of Energy (DOE).

In addition to 10 CFR 830.204[1], this DSA was developed in compliance with applicable requirements of the following DOE Orders, Standards, and Guide documents and the applicable guidance provided in the associated implementation guides:

- DOE O 420.1B, *Facility Safety*[3];
- DOE O 420.1C, *Facility Safety*[4]
- DOE-STD-1021-93, Change Notice #1, *Natural Phenomena Hazards Performance Categorization Guidelines for Structures, Systems, and Components*[5];
- DOE-STD-1027-92, Change Notice No. 1, *Hazard Categorization and Accident Analysis Techniques for Compliance with DOE Order 5480.23, Nuclear Safety Analysis Reports*[6];
- DOE-STD-3009-94, Change Notice No. 3, *Preparation Guide for U.S. Department of Energy Nonreactor Nuclear Facility Documented Safety Analyses*[7]; and
- DOE G 421.1-2, *Implementation Guide for Use in Developing Documented Safety Analyses to Meet Subpart B of 10 CFR Part 830*[8].

S-RCP-J-00001, *SWPF Standards/Requirements Identification Document*[9], lists the codes, standards, and regulations that apply to SWPF Design, Construction, Commissioning, and Operations.

This page intentionally left blank.

## ES-1.2 Facility Background and Mission

Nuclear material production operations at the Savannah River Site (SRS) resulted in the generation of radioactive liquid waste (LW) that is stored in the F- and H-Area Tank Farms (FTF and HTF). Over 150 million gallons (Mgal) of LW has been received into the underground waste storage tanks in FTF and HTF from 1954 to present. The volume of this waste has been reduced by the use of evaporators, resulting in the precipitation of salts. The LW in these tanks includes sludge (containing precipitated solids and insoluble waste), salt solution, and crystallized salts (saltcake).

The bulk of the sludge is transferred directly from the Tank Farms to the Defense Waste Processing Facility (DWPF) for vitrification. Water will be added to dissolve the saltcake and wash sludge that has been segregated for vitrification. The water added for waste removal and sludge washing, with the continued generation of LW by other SRS facilities, will increase the total volume of salt solution to be processed to approximately 96 Mgal. Some fraction of the salt solutions relatively low in curie content were processed by Deliquification, Dissolution, and Adjustment, the Actinide Removal Process, and a modular Caustic-side Solvent Extraction (CSSX) unit prior to SWPF startup. The majority of the salt solution removed from the Tank Farms will be processed through SWPF.

The SWPF mission is to pre-treat the salt waste solutions removed from the LW tanks in the FTF and HTF. Pretreatment at the SWPF removes and concentrates selected actinides (i.e., elements with an atomic number between 89 and 103), strontium-90 ($^{90}$Sr), and the soluble, highly radioactive cesium-137 ($^{137}$Cs) from the salt solution feed. The concentrated waste containing actinides, $^{90}$Sr, and $^{137}$Cs constituents is sent to DWPF, where the waste will be immobilized in glass through a vitrification process. The decontaminated salt solution (DSS) is sent to the Saltstone Production Facility (SPF) for immobilization in a grout mixture and disposal in grout vaults.

Three main pre-treatment processes are used in the SWPF. The Alpha Strike Process (ASP) sorbs selected actinides and $^{90}$Sr on monosodium titanate (MST), and concentrates the MST and sorbed radionuclides by filtration. The second process, CSSX, extracts $^{137}$Cs from the aqueous ASP effluent into a reusable organic extractant. The concentrated $^{137}$Cs is then stripped from the extractant into a disposable aqueous solution. The third process, Alpha Finishing Process (AFP), is similar to ASP in that MST is used to sorb selected actinides and $^{90}$Sr. The AFP will only be used on waste batches when a further reduction in the radionuclide concentrations in the DSS is desired. Most, if not all, of the hazards generated by the SWPF are associated with these three waste pre-treatment processes, the transfer of waste feed into the SWPF, and the transfer of pre-treated waste from the SWPF to the DWPF and SPF. (See Chapter 2.0, Figure 2.10-2).

The SWPF is designed, permitted, and operated as an Industrial Waste Water Treatment Facility, with a peak instantaneous processing rate of 9.4 Mgal/year. Considering the facility's current mission, its design throughput, and the volume of waste to process, the SWPF should have a life cycle of more than 15 years. Therefore, no exemptions from DOE requirements or a graded approach based solely on limited facility life cycle are employed in this DSA.

This page intentionally left blank.

## ES-1.3 Facility Overview

The SWPF is located within the SRS boundaries. The SWPF plot is designated as J-Area under the SRS mapping system. J-Area is adjacent to 200-S-Area, near the center of SRS, within Aiken County, South Carolina. The shortest distance from the SWPF to the SRS boundary is approximately 7 miles (11.2 kilometers) to the north. The SWPF operations area covers approximately 12 acres within J-Area, at an average elevation of 275 feet above mean sea level. (See Chapter 1.0, Figures 1.9-1 and 1.9-2).

The SWPF main processing area is the Process Building (221-J), which has a reinforced concrete core of process cells that house the ASP and CSSX process. The Process Building also houses the Control Room, Analytical Laboratory, and maintenance areas. The Alpha Finishing Facility (AFF) (221-3J) adjoins the south wall of the Process Building and performs an additional alpha sorption treatment of the CSSX effluent, if required. The Cold Chemicals Area houses the water and chemical handling systems that receive, store, and mix sodium hydroxide, nitric acid, and extraction solvent for the SWPF processes. It adjoins the Process Building south wall to the west of the AFF. Various buildings and pads located near the Process Building house the SWPF administrative staff, diesel generator, chiller packages, air compressors, and power transformers. (See Chapter 1.0, Figure 1.9-4).

This page intentionally left blank.

## ES-1.4 Facility Hazard Category

The SWPF is a Hazard Category (HC) 2 Nuclear Facility, based on the criteria specified in DOE-STD-1027-92, Change Notice No. 1[6]. The SWPF is not an HC 1 facility because the radioactive isotopic inventories are not sufficient to produce significant offsite consequences, the SWPF is not a Category A reactor, and the DOE Program Secretarial Officer has not designated it as such.

This page intentionally left blank.

## ES-1.5 Hazard Analysis and Accident Analysis Summary

A DSA should include analysis of Design Basis Accidents (DBAs) and identify any Safety Class (SC) structures, systems, and components (SSCs), along with their safety functions and functional requirements. It should also identify any Safety Significant (SS) SSCs and their functional requirements.

The Hazard Analysis (HA) that supports this DSA demonstrate the entire range of postulated events do not challenge the 25-Roentgen Equivalent Man (rem) Evaluation Guideline (EG) for a member of the public/Maximally Exposed Offsite Individual (MOI) EG at the SRS boundary. Additionally, the HA identified no non-radiological hazardous material accidents that cause or exacerbate a release of radioactive material or challenge the offsite chemical Emergency Response Planning Guideline-2 thresholds.

Chapter 3.0 describes the HA process used to systematically identify and address hazards along with the results of the evaluation of potential internal, man-made external, and natural events that can cause the identified hazards to develop into accidents. Externally to this DSA, V-PHR-J-00007, *SWPF Hazard Analysis*[10] (SWPF HA) systematically identified hazards and systematically evaluated events with a potential to release hazardous materials that may impact workers (Onsite-1), collocated worker (Onsite-2), and/or public (MOI). Results of the SWPF HA (V-PHR-J-00007[10]) are summarized in Subchapter 3.3. The SWPF HA (V-PHR-J-00007[10]) analyzed potential event consequences and frequencies of occurrence to derive preventive and mitigative controls. This chapter also identifies the preventive and mitigating controls for defense-in-depth (general control strategy), worker safety, and environmental protection. The SWPF HA (V-PHR-J-00007[10]) concluded with a limited set of events to be considered as DBAs defined in Subchapter 3.4.

Because there are no offsite consequences that challenge the offsite EG, no SC SSCs or Administrative Controls are required for the SWPF. Because no postulated accidents challenge the offsite EGs, no DBAs are identified for analysis on the basis of offsite consequences. However, several events were identified that have the potential to challenge the Thresholds of Concern for the Onsite-2 (collocated worker) receptor. These events are 1) fires in the ASP process cells, 2) explosions in ASP process vessels, 3) explosions in AFF process vessels, 4) aerosolization from air jet aerosolization events, and 5) seismic events. These events were identified as unique and representative accidents for the SWPF, analyzed using formal accident analysis techniques, and are discussed in Subchapter 3.4.

Table 4.7-1 in Chapter 4.0 lists the associated SS SSCs or Administrative Controls (i.e., hazard controls) with the postulated events that reduce the frequency or consequences of the hazards and postulated events. The applicability of hazard controls for a given event is discussed in Chapters 3.0 and 4.0. The operability of SS SSCs and effective implementation of SS Administrative Controls are protected through the SWPF Technical Safety Requirements, whose derivation is described in Chapter 5.0. The SSCs determined to provide added value to protect workers (Onsite-1) are also identified in Chapter 3.0.

This page intentionally left blank.

## ES-1.6 Organizational Structure

The SWPF Project Organization includes Parsons as the SWPF Engineering, Procurement, and Construction (EPC) Contractor, and a direct support team including several contractors. Personnel from these other companies are integrated into the SWPF Project's organization by placing key support personnel in various positions. The EPC Contractor and its direct support team are responsible for maintenance and operation of SWPF. The EPC Contractor maintains effective Project performance by revising the project's support team make-up as needed by adding to and or reducing the specific providers utilized at SWPF and the extent of their support as appropriate.

This page intentionally left blank.

## ES-1.7 Safety Basis Adequacy

The DSA supports the conclusion that the SWPF can operate and perform its mission with minimal risk to the health and safety of the public, workers at adjacent facilities, the SWPF staff, and the environment. Estimated unmitigated consequences to the collocated worker (Onsite-2) and the public (MOI) from the postulated accident events are shown in Table ES-1.9-1. Table ES-1.9-1 also shows the qualitative mitigated consequences to the collocated worker (Onsite-2) based on the consequence matrix in Table 3.7-5 of Chapter 3.0.

This page intentionally left blank.

## ES-1.8 Documented Safety Analysis Structure and Content

The SWPF DSA was developed in accordance with DOE-STD-3009-94, Change Notice No. 3[7], the safe harbor methodology specified in 10 CFR 830[1]. Additionally, the use of DOE-STD-3009-94, Change Notice No. 3[7] generates a DSA that is similar to the other SRS LW facility DSAs, with a logical format and content that are familiar to end-users. Table ES-1.9-2 demonstrates where the SWPF DSA adequately addresses the DSA criteria specified in 10 CFR 830[1].

This page intentionally left blank.

## ES-1.9 Tables

**Table ES-1.9-1. Summary of Results of Consequence Assessments**

| Accident Event | 100 Meter (m) Dose Collocated Worker | | Site Boundary Offsite Individual Unmitigated |
|---|---|---|---|
| | Unmitigated | Mitigated | |
| Process Vessel Cell Fire | >100 rem | Prevented | < 1 rem |
| ASP Process Vessel Explosion | >100 rem | Prevented | 6.4 rem |
| AFF Process Vessel Explosion | >100 rem | Prevented | < 2 rem |
| ASP APA Air Jet Aerosolization | >100 rem | Negligible | < 1 rem |
| Seismic Event | >100 rem | Low | < 1 rem |

## Table ES-1.9-2. 10 CFR 830.204 (b) Criteria Implementation

| 10 CFR 830.204 (b) Criteria[1] | SWPF DSA Implementation |
|---|---|
| Describe the facility (including the design of SSCs) and the work to be performed. | Chapter 1.0 ("Site Characteristics for the SWPF") describes the facility site characteristics. Chapter 2.0 ("Facility Description") describes the SSCs and waste pre-treatment processes. Chapter 4.0 ("Safety Structures, Systems, and Components") describes the SS and Defense-in-Depth SSCs in the SWPF. |
| Provide a systematic identification of both natural and man-made hazards associated with the facility. | Chapter 3.0 ("Hazard and Accident Analyses") describes the systematic process used to identify the natural and man-made hazards associated with SWPF operation. |
| Evaluate normal, abnormal, and accident conditions including consideration of natural and man-made external events, identification of energy sources or processes that might contribute to the generation or uncontrolled release of radioactive and other hazardous materials, and consideration of the need for analysis of accidents that may be beyond the design basis of the facility. | Chapter 3.0 ("Hazard and Accident Analyses") presents evaluations of the specified spectrum of potential normal, abnormal, and accident conditions or events associated with the generation or uncontrolled release of radioactive or hazardous materials and provides analysis of appropriate beyond the design basis accidents. |
| Derive the hazard controls necessary to: ensure adequate protection of workers, the public, and the environment; demonstrate the adequacy of these controls to eliminate, limit, or mitigate identified hazards; and define the process for maintaining the hazard controls current at all times and controlling their use. | Chapter 3.0 ("Hazard and Accident Analyses") identifies the hazard controls that protect the public, workers, and the environment and describe how these controls prevent or mitigate the consequences of the identified hazards. Chapter 4.0 ("Safety Structures, Systems, and Components") provides more detail about SSCs that are credited as hazard controls. Chapter 5.0 ("Derivation of Technical Safety Requirements") provides the bases for establishing the facility Technical Safety Requirements that maintain the hazard controls and govern their status and use. |
| Define the characteristics of the safety management programs necessary to ensure safe operation of the facility including (where applicable) quality assurance, procedures, maintenance, personnel training, conduct of operations, emergency preparedness, fire protection, waste management, and radiation protection. | Chapters 7.0 through 17.0 describe the safety management programs that ensure safe operation of the SWPF. |
| With respect to a non-reactor nuclear facility with fissionable material in a form and amount sufficient to pose a potential for criticality, define a criticality safety program that: 1) ensures that operations with fissionable material remain subcritical under all normal and credible abnormal conditions, 2) identifies applicable nuclear criticality safety standards, and 3) describes how the program meets applicable nuclear criticality safety standards. | Chapter 6.0 ("Prevention of Inadvertent Criticality") presents the conclusions of the documented process evaluations and describes the controls ensuring that the SWPF processes remain subcritical under all normal and credible abnormal conditions. This chapter also describes the SWPF Criticality Safety Program (CSP) and references the CSP documents. |

## ES-1.10 References

[1] 10 CFR 830, *Nuclear Safety Management*.

[2] DE-AC09-02SR22210, *Design, Construction, and Commissioning of a Salt Waste Processing Facility (SWPF)*. U. S. Department of Energy. 2002.

[3] DOE O 420.1B, *Facility Safety*. U.S. Department of Energy, Washington, D.C.

[4] DOE O 420.1C, *Facility Safety*. U. S. Department of Energy, Washington, D. C.

[5] DOE-STD-1021-93, Change Notice #1, *Natural Phenomena Hazards Performance Categorization Guidelines for Structures, Systems, and Components*. U.S. Department of Energy, Washington, D.C.

[6] DOE-STD-1027-92, Change Notice No. 1, *Hazard Categorization and Accident Analysis Techniques for Compliance with DOE Order 5480.23, Nuclear Safety Analysis Reports*. U.S. Department of Energy, Washington, D.C.

[7] DOE-STD-3009-94, Change Notice No. 3, *Preparation Guide for U.S. Department of Energy Nonreactor Nuclear Facility Documented Safety Analyses*. U.S. Department of Energy, Washington, D.C.

[8] DOE G 421.1-2, *Implementation Guide for Use in Developing Documented Safety Analyses to Meet Subpart B of 10 CFR Part 830*. U.S. Department of Energy, Washington, D.C.

[9] S-RCP-J-00001, *SWPF Standards/Requirements Identification Document*. Parsons, Aiken, South Carolina.

[10] V-PHR-J-00007, *SWPF Hazard Analysis*. Parsons, Aiken, South Carolina.

This page intentionally left blank.

# SWPF DOCUMENTED SAFETY ANALYSIS

# CHAPTER 1.0
# SITE CHARACTERISTICS FOR THE SALT WASTE PROCESSING FACILITY

This page intentionally left blank.

# TABLE OF CONTENTS

1.0 SITE CHARACTERISTICS FOR THE SALT WASTE PROCESSING FACILITY ..... 1.1-1

1.1 Introduction ..... 1.1-1
1.2 Requirements ..... 1.2-1
1.3 Site Description ..... 1.3-1
1.3.1 Geography ..... 1.3-1
1.3.1.1 Location ..... 1.3-1
1.3.1.2 Exclusion Area ..... 1.3-1
1.3.2 Demography ..... 1.3-5
1.3.2.1 Permanent Population and Distribution ..... 1.3-5
1.3.2.2 Transient Population Variations ..... 1.3-5
1.3.3 Uses of Nearby Land and Waters ..... 1.3-6
1.3.3.1 Land Use ..... 1.3-6
1.3.3.2 Water Use ..... 1.3-6
1.4 Environmental Description ..... 1.4-1
1.4.1 Meteorology ..... 1.4-1
1.4.1.1 Regional Climatology ..... 1.4-1
1.4.1.2 Local Meteorology ..... 1.4-1
1.4.1.3 Onsite Meteorological Measurement Program ..... 1.4-1
1.4.1.4 Short-term (Accident) Diffusion Estimates ..... 1.4-2
1.4.1.5 Long-term (Routine) Diffusion Estimates ..... 1.4-2
1.4.2 Geology ..... 1.4-2
1.4.2.1 Regional Geology (320-km [200-mile] Radius) ..... 1.4-2
1.4.2.2 Tectonic Features ..... 1.4-3
1.4.3 Hydrology ..... 1.4-3
1.4.3.1 Surface Hydrology ..... 1.4-3
1.4.3.2 SRS ..... 1.4-3
1.4.3.3 SWPF ..... 1.4-3
1.4.3.4 Regional Hydrogeology (Within 75-mile Radius) ..... 1.4-4
1.4.3.5 Area Hydrogeology ..... 1.4-4
1.4.3.6 Groundwater Chemistry ..... 1.4-5
1.4.4 Seismology ..... 1.4-6
1.4.4.1 Earthquake History of the General Site Region ..... 1.4-6
1.4.4.2 Relationship of Geologic Structure of Seismic Sources in the General Site Region ..... 1.4-6
1.4.4.3 Development of Design Basis Earthquake ..... 1.4-7
1.4.4.4 Design Response Spectra ..... 1.4-7
1.5 Natural Phenomena Threats ..... 1.5-1
1.5.1 Flood ..... 1.5-1
1.5.1.1 Flood History ..... 1.5-1
1.5.1.2 Flood Design Considerations ..... 1.5-1
1.5.1.3 Effects of Local Intense Precipitation ..... 1.5-1

TABLE OF CONTENTS (cont.)

1.5.1.4 PMF on Streams and Rivers ..... 1.5-1
1.5.1.5 Potential Dam Failures (Seismically Induced) ..... 1.5-3
1.5.1.6 Probable Maximum Surge and Seiche Flooding ..... 1.5-4
1.5.1.7 Ice Flooding ..... 1.5-4
1.5.1.8 Water Canals and Reservoirs ..... 1.5-4
1.5.1.9 Channel Diversions ..... 1.5-4
1.5.1.10 Flooding Protection Requirements ..... 1.5-4
1.5.1.11 Low Water Considerations ..... 1.5-4
1.5.1.12 Future Control ..... 1.5-5
1.5.2 Earthquake ..... 1.5-5
1.5.3 High Wind ..... 1.5-5
1.5.4 Tornado ..... 1.5-6
1.6 External Man-made Threats ..... 1.6-1
1.6.1 Transportation ..... 1.6-1
1.6.1.1 Roads and Highways ..... 1.6-1
1.6.1.2 Railroads ..... 1.6-2
1.6.1.3 Airports and Air Traffic ..... 1.6-2
1.6.1.4 Airspace Restrictions ..... 1.6-2
1.6.1.5 Waterborne Transportation ..... 1.6-2
1.6.2 Missiles and Blast Effects ..... 1.6-2
1.7 Nearby Facilities ..... 1.7-1
1.7.1 Nuclear Facilities ..... 1.7-1
1.7.1.1 Non-Savannah River Site Nuclear Facilities ..... 1.7-1
1.7.1.2 Savannah River Site Nuclear Facilities ..... 1.7-1
1.7.2 Industrial Centers ..... 1.7-4
1.7.3 Military Facilities ..... 1.7-4
1.8 Environmental Analyses ..... 1.8-1
1.9 Figures ..... 1.9-1
1.10 References ..... 1.10-1

**List of Figures**

Figure 1.9-1. Savannah River Site Location ..... 1.9-1
Figure 1.9-2. SRS Facility Areas near SWPF at J-Area ..... 1.9-2
Figure 1.9-3. Electrical Transmission Lines ..... 1.9-3
Figure 1.9-4. SWPF Site Plot ..... 1.9-4
Figure 1.9-5. SRS Ingestion Exposure Emergency Planning Zone ..... 1.9-5
Figure 1.9-6. Map of 50-Mile Radius Around SRS ..... 1.9-6
Figure 1.9-7. Locations of SRS Meteorological Monitoring Towers ..... 1.9-7
Figure 1.9-8. Topographic Map of J-Area and Adjacent SRS Facilitites ..... 1.9-8

## LIST OF ACRONYMS AND ABBREVIATIONS

| | |
|---|---|
| % | Percent |
| AFF | Alpha Finishing Facility |
| ANS | American Nuclear Society |
| ANSI | American National Standards Institute |
| ASCE | American Society of Civil Engineers |
| CAP88 | Clean Air Act Assessment Package-1988 |
| CFR | Code of Federal Regulations |
| cfs | cubic feet per second |
| CIF | Consolidated Incinerator Facility |
| Cs | Cesium |
| CSSX | Caustic-side Solvent Extraction |
| CSTF | Concentration, Storage, and Transfer Facility |
| CSX | CSX Transportation Incorporated |
| DOE | U.S. Department of Energy |
| DSA | Documented Safety Analysis |
| DSS | Decontaminated Salt Solution |
| DWPF | Defense Waste Processing Facility |
| EPA | U.S. Environmental Protection Agency |
| EPZ | Emergency Planning Zone |
| ETP | Effluent Treatment Project |
| FEMA | Federal Emergency Management Agency |
| FSA | Facility Support Area |
| ft | Foot/Feet |
| FTF | F-Area Tank Farm |
| HTF | H-Area Tank Farm |
| IBC | International Building Code |
| km | kilometer |
| kV | kilovolt |
| LW | Liquid Waste |
| MCE | Maximum Considered Earthquake |
| MOX | Mixed Oxide Fuel Fabrication Facility |
| msl | mean sea level |
| MST | Monosodium Titanate |
| NEHRP | National Earthquake Hazard Reduction Program |
| NPDES | National Pollutant Discharge Elimination System |
| NPH | Natural Phenomena Hazard |
| NUREG | U.S. Nuclear Regulatory Commission Regulation |
| PC | Performance Category |
| PMF | Probable Maximum Flood |
| PMP | Probable Maximum Precipitation |
| RBOF | Receiving Basin for Offsite Fuel |
| RCRA | Resource Conservation and Recovery Act |

## LIST OF ACRONYMS AND ABBREVIATIONS (cont.)

| | |
|---|---|
| SAR | Safety Analysis Report |
| SCDHEC | South Carolina Department of Health and Environmental Control |
| SCE&G | South Carolina Electric and Gas |
| SCR | South Carolina Regulation |
| SPF | Saltstone Production Facility |
| SRNS | Savannah River Nuclear Solutions |
| SRS | Savannah River Site |
| SS | Safety Significant |
| SSC | Structure, System, and Component |
| SWMF | Solid Waste Management Facility |
| SWPF | Salt Waste Processing Facility |
| TED | Total Effective Dose |
| USNRC | U.S. Nuclear Regulatory Commission |
| UTRC | Upper Three Runs Creek |
| VEGP | Vogtle Electric Generating Plant |
| WSRC | Westinghouse Savannah River Company |

# 1.0 SITE CHARACTERISTICS FOR THE SALT WASTE PROCESSING FACILITY

## 1.1 Introduction

This chapter provides information concerning site characteristics of the Salt Waste Processing Facility (SWPF) that satisfies the requirements of Subpart B, Appendix A of 10 Code of Federal Regulations (CFR) 830*Nuclear Safety Management*[1], for a Documented Safety Analysis (DSA). It describes SWPF site characteristics and facility environs that are important to the Safety Basis for salt waste processing in the SWPF.

Information is provided to support and clarify assumptions used in the hazard and accident analyses to identify and analyze potential external and natural event accident initiators and accident consequences (Chapter 3.0). This chapter includes the following:

- A description of the SWPF location within Savannah River Site (SRS) and the relative proximity of the SWPF to other SRS facilities, SRS boundaries, and the public;
- Quantification of the surrounding environmental characteristics that influence the design, procedures, and safety of SWPF operations;
- Historical bases for characteristics in meteorological and geophysical phenomena applied in the hazard and accident analyses; and
- Description of onsite worker and transient populations relative to area and facility boundaries.

Chapter 1 of the Savannah River Nuclear Solutions (SRNS)-IM-2013-00019, *Site Characteristics and Program Descriptions*[2], describes the characteristics of SRS. Where SRNS-IM-2013-00019 descriptions of the site characteristics listed above also apply to the SWPF, based on its geographic location relative to adjacent SRS facilities, SRNS-IM-2013-00019 is referenced.

When detailed information is provided in another chapter of this DSA, that chapter is referenced to limit repetition within this chapter. Where policies, programs, and practices important to safe operation are described in detail in other Site documents, the pertinent features are summarized in this chapter and the documents are referenced.

This page intentionally left blank.

## 1.2 Requirements

S-RCP-J-00001, *SWPF Standards/Requirements Identification Document*[3], lists the codes, standards, and regulations governing the policies and program elements of the SWPF programs that govern SWPF design, construction, and operation.

This page intentionally left blank.

## 1.3 Site Description

### 1.3.1 Geography

#### 1.3.1.1 Location

The SWPF is located within the boundaries of SRS, which occupies approximately 310 square miles on the upper Atlantic Coastal Plain of South Carolina within Aiken, Barnwell, and Allendale Counties. The center of SRS is approximately 25 miles southeast of Augusta, Georgia, 22 miles south of Aiken, South Carolina, 100 miles from the Atlantic Coast, and 110 miles south-southeast of the North Carolina border. The topography at SRS varies from gently sloping to moderately steep. SRS is bounded along 17 miles of its southwest border by the Savannah River (Figure 1.9-1). SRNS-IM-2013-00019[2] contains additional details describing the location of SRS.

The SWPF plot is designated as J-Area under the SRS mapping system. It has an area of approximately 11 acres at an average elevation of 275 feet (ft) above mean sea level (msl). J-Area is adjacent to 200-S-Area, near the center of SRS, within Aiken County, South Carolina (Figure 1.9-2). The shortest distance from the SWPF to the SRS boundary is approximately 7 miles (11.2 kilometers [km]) to the north.

#### 1.3.1.2 Exclusion Area

**General Site**

SRS, which is owned by the U.S. Government, was set aside in 1950 as a controlled area for the production of nuclear materials for national defense. The U.S. Department of Energy (DOE) and its contractors are responsible for the operation of SRS. The exclusion area, public roads, railroads, and controls for these are described in SRNS-IM-2013-00019[2], as are locations of the administrative, laboratory, production, and production support areas within the Site.

The road system within SRS is described in SRNS-IM-2013-00019[2]. SRS has its own railroad system, which services all major facilities. For further details, refer to SRNS-IM-2013-00019.

The electrical grid on SRS operates at 115 kilovolts (kV) and draws power from two transmission lines on separate rights-of-way from the South Carolina Electric and Gas (SCE&G) Urquhart Station and a third line from the 230-kV tie-line between the V.C. Summer and Canadys Stations of SCE&G (Figure 1.9-3). The Site 115-kV distribution system is discussed in SRNS-IM-2013-00019[2]. There are no natural gas or oil line networks at SRS.

**SWPF**

An area plot for the SWPF is shown in Figure 1.9-4. The SWPF main processing area is the Process Building (221-J), which has a reinforced concrete core of process cells that house equipment to treat radioactive liquid waste (LW). The reinforced concrete core of the Process Building is surrounded by process support areas enclosed by steel framing, siding, and insulated roofing. Various buildings and pads located around the Process Building (221-J) house the

SWPF administrative staff, diesel generator, chiller packages, air compressors, 13.8-kV/480-volts alternating current stepdown transformers, etc.

Included within the SWPF operations area is the Alpha Finishing Facility (AFF) (221-3J), which treats cesium-137 ($^{137}Cs$)-depleted clarified salt solution from the SWPF Caustic-side Solvent Extraction (CSSX) process to further reduce actinide and strontium-90 concentrations. The AFF, adjoining the south wall of the SWPF Process Building (221-J), consists of three reinforced concrete dike areas containing the Alpha Finishing Process equipment and two adjacent rooms for support equipment, enclosed by steel framing, siding, and insulated roofing.

SRS facilities within an approximate two-mile radius of the SWPF are:

- Defense Waste Processing Facility (DWPF),
- Saltstone Production Facility (SPF),
- Consolidated Incineration Facility (CIF) (closed and de-inventoried),
- Receiving Basin for Offsite Fuel (RBOF) (closed and de-inventoried),
- H-Area Canyon,
- H-Area Tank Farm (HTF),
- F-Area Tank Farm (FTF),
- F-Area Canyon (closed and de-inventoried),
- Mixed Oxide (MOX) Fuel Fabrication Facility,
- Actinide Removal Process Facility (Building 512-S),
- Modular Caustic Side Solvent Extraction Unit Facility,
- Tritium Facilities,
- Effluent Treatment Project (ETP), and
- E-Area, a solid waste treatment and disposal facility.

Subchapter 1.7.1 provides additional details about locations and functions of the operating SRS facilities and their potential to impact safety within the SWPF.

**Site Boundary**

Activities may be conducted within SRS and SWPF that are not under control of the SWPF operations contractor or its subcontractors, and are not related to salt waste processing. These activities are performed by various other organizations. Additional information about these organizations is provided in SRNS-IM-2013-00019[2].

**Boundaries for Establishing Effluent Release Limits**

Emergency Planning Zones (EPZs) are areas for which planning is needed to ensure that prompt and effective actions can be taken to protect onsite personnel, public health and safety, and the environment. In coordination with State officials, two EPZs have been established, the plume exposure and ingestion exposure zones. Section 7 of Site Manual SCD-7, *SRS Emergency Plan*[4], for response in the plume exposure EPZ is designed to minimize exposures from the plume and deposited material and skin absorption/inhalation exposures. Plans for response in the ingestion exposure EPZ are designed to minimize exposures from ingesting contaminated food or water (Figure 1.9-5).

**Access Control**

The outer perimeter of SRS is fenced and Site access is controlled by the security contractor. General access to SRS, with the exception of public transportation corridors (e.g., SRS Road 1 and South Carolina Highways 125 and 278), is limited to badged personnel. All access to SRS protected areas off these public highways is controlled by a fence or entry control facilities staffed by security personnel. Roads that pass through or near the Site perimeter can be blocked by security personnel or with the assistance of local law enforcement personnel (Figure 1.9-6).

The outer perimeter of the SWPF is enclosed by a property protection fence. Employee access within the SWPF fence is controlled by an automated access control system and restricted to employees that have the appropriate designation on their security badges. If warranted, security personnel may be stationed at SWPF access points to further control personnel entry and egress. S-SRI-J-00001, *SWPF J-Area and Parsons Offsite Facilities Site Security Plan*[5], establishes the objectives, requirements, and responsibilities for protecting SWPF information, physical assets, and personnel.

**Effluent Release Points**

The SWPF operates as an industrial wastewater treatment facility under a Permit issued by the South Carolina Department of Health and Environmental Control (SCDHEC). With the exception of the SWPF Industrial Wastewater Treatment Facility Permit, the SWPF operates under, and in compliance with, the applicable SCDHEC environmental permits or permit exceptions issued to SRS.

The SWPF does not discharge industrial wastewater process effluents that are subject to National Pollutant Discharge Elimination System (NPDES) regulations. Cooling water blowdown and cooling system condensate from the process building are discharged to the sanitary sewer system. Other buildings such as the Administration Building are allowed to discharge to the environment. These discharges are covered under the SCDHEC General Permit for Utility Water Discharges, which allows unlimited discharge quantities. Stormwater discharges from the SWPF are covered by Permit No. SCR000000, *NPDES General Permit for Storm Water Discharges Associated with Industrial Activity (except construction activity)*[6], and the associated Stormwater Pollution Prevention Plans.

Annual SWPF emissions of volatile organic compounds, nitrogen oxides, and mercury to the atmosphere as estimated in Q-CLC-J-00006, *Level II Analysis of SWPF Toxic Air Emissions and Evaluation of Chemical Emissions Exposure Levels Adjacent to SWPF*[7], are below those deemed significant under South Carolina Regulation (SCR) 61-62.5, Air Pollution Control Standards: Standard 7: *Prevention of Significant Deterioration*[8]. Emissions of SCR 61-62.5 Standard 2: *Ambient Air Quality Standards*[9], Standard 8: *Toxic Air Pollutants*[10], and hazardous air pollutants subject to National Emission Standards for Hazardous Air Pollutants are below those limits that require TV-0080-0041, *Savannah River Site Part 70 Air Quality (Title V Operating) Permit*[11] or SCR 61-62.70, *Title V Operating Permit Program*[12]. SWPF air emission discharge points are listed as insignificant sources under TV-0080-0041.

Radiological emissions are regulated under Subpart H to 40 CFR 61, *National Emission Standards for Hazardous Air Pollutants*[13], but have been calculated to be below levels requiring a permit to construct a new source or modification to the SRS operating permit TV-0080-0041. However, radiological stack emissions are sampled and analyzed per American National Standards Institute (ANSI)-N13.1-1969, *Guide to Sampling Airborne Radioactive Materials in Nuclear Facilities*[14]. Quarterly sampling/analysis of stack emissions is required per Potential Impact Category 3 Criteria.

SRS maintains an active permit inventory for NPDES-permitted outfalls and permitted air emission sources. The SRS Annual Environmental Report contains a listing of NPDES outfall locations and the sources of waste water contained in each effluent. That report also contains an updated listing of all air permits held by SRS including permit number, permit title, and permitted sources. SWPF environmental emissions data are incorporated into the SRS Annual Environmental Report.

**Relevant Special Features**

SRS is a self-contained site that provides its own security, fire protection, limited occupational and emergency medical care, maintenance, and other services such as radiological protection, environmental monitoring, industrial hygiene, and worker safety (SRNS-IM-2013-00019[2]). As necessary, SWPF utilizes these SRS services under Interface Control Documents (ICDs) or memoranda of agreement.

A large supply of specialized equipment is available from regional DOE offices (in addition to the onsite resources) including specialized equipment for tracking radiological releases, meteorological assessment systems, and monitoring equipment. State agencies in South Carolina and Georgia, Vogtle Electric Generating Plant (VEGP), Fort Gordon, and other nearby sources can also provide monitoring equipment, medical facilities, and laboratory facilities in emergencies. Also, several municipal emergency organizations are located within 25 miles of SRS. These resources are discussed in Chapter 15.0.

### 1.3.2 Demography

#### 1.3.2.1 Permanent Population and Distribution

**General Site**

Residential population data from the 2013 U.S. census (SRNS-IM-2013-00019[2]) is provided for the counties adjoining and within approximately 50 miles of the SRS (Figure 1.9-6). The counties and corresponding populations are listed below:

Counties in South Carolina:

- Aiken 164,176
- Allendale 9,839
- Bamberg 15,430
- Barnwell 22,119
- Edgefield 26,436
- Orangeburg 90,942

Counties in Georgia:

- Burke 22,923
- Columbia 135,416
- Richmond 202,003

Total population in nearby counties is 689,284.

SRNS-IM-2013-00019[2] provides more demographic information applicable to SRS.

#### 1.3.2.2 Transient Population Variations

Transient population variations for the general SRS area within approximately five miles of the SRS boundary are discussed in SRNS-IM-2013-00019[2].

**Industrial Population**

The industrial population, consisting primarily of the SRS workforce, VEGP employees, and employees of 16 smaller industries located in or near Barnwell, Williston, New Ellenton, and Jackson, South Carolina, comprise a daily transient population of approximately 25,734. Most of this total population works Monday through Friday during the hours 0800 to 1600. These workers spend an average of about 45 hours per worker, per week, at their worksites.

As of November 2014, the total onsite employment at SRS during the day shift of a weekday was approximately 8,300 at A/M-, B-, C-, E-, F-, H-, K-, N-, S-, and Z-Areas. With the exception of J-Area, the current SRS work force, by employer, is presented in SRNS-IM-2013-00019[2]. During routine waste processing operations, the SWPF will employ approximately 300 total employees, with approximately 40 employees working within the process areas of the facility on a maximally staffed shift crew.

**School Population**

The existing public school population within 5 miles of the SRS boundary consists of students and school personnel associated with public schools located in New Ellenton, Jackson, Williston, and Barnwell, South Carolina. There are no public schools within five miles of the SWPF (SRNS-IM-2013-00019[2]).

**Recreational and Health Care Populations**

Recreational land usage and health care population within the five-mile radius is discussed in SRNS-IM-2013-00019[2].

**Casual Transients**

Casual transients, people who travel through the Site on personal business, are discussed in SRNS-IM-2013-00019[2].

**Operating Activities**

In addition to SWPF operating activities, only the SRS operating activities occur within the five-mile radius surrounding SWPF (SRNS-IM-2013-00019[2]).

### 1.3.3 Uses of Nearby Land and Waters

Land use within approximately five miles of the SRS boundary is discussed in SRNS-IM-2013-00019[2].

#### 1.3.3.1 Land Use

Land use at SRS is discussed in SRNS-IM-2013-00019[2].

#### 1.3.3.2 Water Use

The major rivers near SRS include the Savannah, Salkehatchie, and South Fork Edisto Rivers. The Savannah River bounds the site for 17 miles on the southwest side and is a major source of water for SRS operations. Raw or treated river water is not used by or within the SWPF. SWPF operations and processes use water supplied from the SRS Domestic Water System. For further information on SRS water use, see SRNS-IM-2013-00019[2].

## 1.4 Environmental Description

### 1.4.1 Meteorology

Information on SRS meteorological conditions is primarily taken from SRS collected data with supplemental data from the National Oceanic and Atmospheric Administration Local Climatological Data as discussed in SRNS-IM-2013-00019[2]. Specific meteorology information used in the development of Accident Analysis is referenced in Chapter 3.0 or in the specific calculation where the information is used.

#### 1.4.1.1 Regional Climatology

Regional climatology is discussed in SRNS-IM-2013-00019[2].

#### 1.4.1.2 Local Meteorology

Local meteorology such as data sources, temperature, humidity, precipitation, fog, surface wind patterns, the occurrence of strong winds and tornadoes, and other data are discussed in SRNS-IM-2013-00019[2].

#### 1.4.1.3 Onsite Meteorological Measurement Program

The current meteorological monitoring program at SRS meets or exceeds criteria in guidance provided in DOE/EH-0173T, *Environmental Regulatory Guide for Effluent Monitoring and Environmental Surveillance*[15], U.S. Nuclear Regulatory Commission (USNRC) Regulatory Guide 1.23, *Meteorological Monitoring Programs for Nuclear Power Plants* [16], ANSI/American Nuclear Society (ANSI/ANS)-3.11-2005, *American National Standard for Determining Meteorological Information at Nuclear Facilities*[17], and U.S. Environmental Protection Agency (EPA) guidance in EPA-454/R-99-005, *Meteorological Monitoring Guidance for Regulatory Modeling Applications*[18]. Meteorological data are collected from instrumentation on a network of towers located adjacent to each production area at SRS and the Central Climatology Facility (Figure 1.9-7). The area towers are equipped with sonic anemometers, slow response resistance temperature probes, and relative humidity sensors at a height of 61 meters above ground. The Central Climatology Facility tower is equipped with the identical instrumentation at elevations of 4, 18, 36, and 61 meters. The Central Climatology Facility is also equipped with instrumentation for measuring precipitation, evaporation, solar radiation, barometric pressure, and soil temperature. For additional details on the onsite Meteorological Measurement Program, see SRNS-IM-2013-00019[2].

##### 1.4.1.3.1 Onsite Air Quality

The National Ambient Air Quality Standards, established under the *Clean Air Act*[19] (last amended in 1990), created air concentration standards for seven “criteria” pollutants: carbon monoxide, lead, nitrogen dioxide, total suspended particulates, respirable particulate matter, ozone, and sulfur dioxide. For more information on onsite air quality measurements, see SRNS-IM-2013-00019[2].

#### 1.4.1.3.2 SWPF Meteorology

Data from the H-Area meteorological tower are the most representative for characterizing the dispersion climatology of the SWPF.

### 1.4.1.4 Short-term (Accident) Diffusion Estimates

The short-term relative diffusion factors such as surface roughness, deposition velocity, stability factor, and wind speed are incorporated into the Total Effective Dose (TED) values used in calculating estimates of the radiological consequences for selected accidents, as discussed in Chapter 3.0. These TED values are derived from the MELCOR Accident Consequence Code System software calculations for various source terms and release periods of 3 minutes, 20 minutes, and 1, 2, and 8 hours.

Section 1 of Site Manual SCD-7[4], summarizes the processes by which the onset of an operational emergency is recognized. Section 1 of Site Manual SCD-7 also identifies the methodology used to obtain meteorological information, estimate release rates, and source terms and describes the computer models used at SRS for consequence assessment of radiological and non-radiological hazardous material releases. The specific models used and the plume methodologies employed (e.g., Gaussian plume) are detailed in Section 1 of Site Manual SCD-7 and supporting procedures.

### 1.4.1.5 Long-term (Routine) Diffusion Estimates

A dose assessment for routine SWPF releases was performed pursuant to Subpart H of 40 CFR 61[13]. The following discussion briefly describes the methods used and presents the results.

The source term was evaluated following the method outlined in Westinghouse Savannah River Company (WSRC)-TR-2001-00375, *Radionuclide Releases During Normal Operations for Ventilated Tanks*[20]. This method was approved by SCDHEC for determining the emissions from ventilated tanks at SRS, pursuant to calculations performed to satisfy 40 CFR 61.96(b) (*Applications to construct or modify*[13]).

The source term for each radionuclide is then input in the EPA air dispersion–dose model, Clean Air Act Assessment Package-1988 (CAP88) Version 2.0 for personal computers. CAP88-PC Version 2.0 is approved by the EPA for use in evaluating emissions from DOE operations for compliance with 40 CFR 61[13]. The SWPF inputs and assumptions used in the CAP88-PC Version 2.0 model and the model output are described in Calculation Q-CLC-J-00052, *SWPF Radiological Air Emissions, Dispersion and Dose Assessment for Normal Operations of Ventilated Tanks and Vessels*[21].

## 1.4.2 Geology

### 1.4.2.1 Regional Geology (320-km [200-mile] Radius)

Regional geology is discussed in SRNS-IM-2013-00019[2].

#### 1.4.2.2 Tectonic Features

Plate tectonics is the concept that the earth's lithosphere (i.e., crust and upper mantle) is broken into large blocks, with the leading and trailing edges of each block being continually renewed or destroyed. Plate tectonics within a 320-km (200-mile) radius of SRS provide descriptions of the major structural or deformational features of the region, as well as the origins, evolution, and interrelatedness of these features. The implementation of Natural Phenomena Hazards (NPH) mitigation requires that the tectonic elements of the site region be understood and described in sufficient detail to allow an evaluation of the safety of a proposed or existing facility (DOE O 420.1B: *Facility Safety*[22]). The major issue with respect to the tectonic framework and site suitability is concern for tectonic features influencing the seismicity of the region.

Based on previous studies at SRS and elsewhere, there are no known capable or active faults within the 320-km radius of the Site that influence seismicity of the region, with the exception of the blind, poorly constrained faults associated with the Charleston seismic zone (SRNS-IM-2013-00019[2]).

More detailed discussion of the SRS tectonic features is provided in SRNS-IM-2013-00019[2].

### 1.4.3 Hydrology

#### 1.4.3.1 Surface Hydrology

#### 1.4.3.2 SRS

Much of SRS is located on the Aiken Plateau. The plateau slopes to the southeast approximately 5 ft per mile and is dissected by streams that drain into the Savannah River. The major tributaries that occur on SRS are Upper Three Runs Creek (UTRC), Four Mile Branch, Pen Branch, Steel Creek, and Lower Three Runs Creek. The locations, sizes, shapes, and other hydrological characteristics of SRS streams, rivers, lakes, shore regions, surface drainage, and groundwater environments that influence the general site are described in SRNS-IM-2013-00019[2].

#### 1.4.3.3 SWPF

Based on available information, the following subchapters describe SWPF hydrology.

A topographic map showing surface drainage near the SWPF is shown in Figure 1.9-8. A topographic high runs through H- and S-Areas toward Z-Area. The nearest significant streams are UTRC and its two tributaries, McQueen's Branch and Crouch's Branch. UTRC flows at elevations of less than 150 ft above msl. The mean annual flow at a gauging station approximately 3 miles from H-Area is 215 cubic feet per second (cfs). The measured maximum flow from 1974 to 1986 was about 950 cfs.

The SWPF (J-Area) is flanked to the north by UTRC and to the south and east by McQueen's Branch, a tributary of UTRC. Runoff from precipitation at the SWPF is diverted into storm sewers and then discharged through a permitted outfall to McQueen's Branch, which empties into UTRC which, in turn, empties into the Savannah River. The stormwater collection and runoff systems are discussed in Chapter 2.0.

SWPF is located near a water table divide between UTRC and Four Mile Branch. Near-surface groundwater from SWPF discharges to one of two tributaries of UTRC.

#### 1.4.3.3.1 Environmental Acceptance of Effluents

There are active NPDES-permitted outfalls within the SRS, but none are used by the SWPF. These are discussed in SRNS-IM-2013-00019[2].

#### 1.4.3.3.2 Chemical and Biological Composition of Adjacent Watercourses

The chemical and biological composition of adjacent watercourses is described in SRNS-IM-2013-00019[2].

### 1.4.3.4 Regional Hydrogeology (Within 75-mile Radius)

A synopsis of regional hydrogeology is described in SRNS-IM-2013-00019[2].

### 1.4.3.5 Area Hydrogeology

The general hydrogeology of selected operations areas at SRS is discussed in SRNS-IM-2013-00019[2]. In general, updated hydrogeological data and descriptions of facility-specific hydrostratigraphy are included in reports of field investigations for the facility area. These reports include Resource Conservation and Recovery Act (RCRA)[23] Part B Applications, RCRA Facility Investigations/Remedial Investigations or Baseline Risk Assessments, environmental assessments of various kinds, or other field investigation reports. These field activities are reported in the SRS Annual Environmental Report.

#### 1.4.3.5.1 Area Hydrogeological Characteristics – General Separations and Defense Waste Processing Areas

The General Separations Area is broadly defined as the 200-F Area and the 200-H Area. In the past, the focus of facilities in this area has been on chemical separations; however, changes in the Site mission have impacted operations in the General Separations Area, including the construction and startup of Tritium Facilities and various waste management facilities (DWPF and E-Area vaults). The Tritium Facilities and E-Area solid waste vaults are located between F- and H-Areas. The Defense Waste Processing Area is broadly defined as S- and Z-Areas. The proximity of SWPF to these SRS areas makes the following discussion of area hydrology applicable to the SWPF.

#### 1.4.3.5.1.1 Water Usage

Facility water usage in the General Separations Area varies from year to year and is a function of increased or decreased site activities. As an example, the total pumping rate from F-Area production wells in 1988 (a year of full operations at F-Area facilities) was estimated to be 853 million gallons. Fifty-nine percent of this flow was from domestic and service wells; the remaining 41% was from process wells. To date, operation of production water wells has not caused subsidence of the F-Canyon foundation or influenced potential contaminant flow paths in the post-Cretaceous aquifers.

#### 1.4.3.5.1.2 Hydrogeologic Setting

The General Separations Area sits above a water table ridge, defined on the south by Four Mile Branch and on the north and west by UTRC. The ridge is dissected on the northern flank by Crouch Branch (between E- and H-Areas) and McQueen Branch (east of Z-Area). Thus, the facilities lie above minor groundwater divides; flow at the water table is generally away from the facilities and toward the nearest surface water, McQueen's Branch (*Hydrogeologic Framework of West Central South Carolina*[24]). The majority of water that reaches the water table beneath the General Separations Area is discharged into either UTRC (or its tributaries) or Four Mile Branch.

In general, there is very limited downward migration of groundwater across the Meyers Branch Confining Unit beneath the General Separations Area. As a result, the hydrostratigraphic units linked to General Separations Area operations are the Upper Three Runs Aquifer (the water table aquifer), the Gordon Confining Unit, and the Gordon Aquifer Unit. A discussion of the hydraulic properties and hydraulic gradients is in SRNS-IM-2013-00019[2]. This discussion is pertinent because there are only limited data available from outside the General Separations Area; thus, the data can be used to characterize conditions beneath the General Separations Area.

### 1.4.3.6 Groundwater Chemistry

#### 1.4.3.6.1 Regional Groundwater Chemistry

The regional groundwater chemistry is described in SRNS-IM-2013-00019[2].

#### 1.4.3.6.2 Area Groundwater Chemistry

The general groundwater chemistry and groundwater use of selected operations areas at SRS are described in SRNS-IM-2013-00019[2].

Due to the proximity of the SWPF to H-Area, it is judged that the groundwater chemistry of the SWPF does not significantly differ from the H-Area groundwater and that groundwater monitoring for H-Area, as discussed below, also applies to the SWPF site. An environmental monitoring program for SRS at large monitors the groundwater in and around the J-Area.

Four monitoring wells, screened within the uppermost portion of the Upper Three Runs Aquifer at depths ranging from 55 to 70 ft, are located adjacent to H-Canyon (Building 221-H), approximately 1,000 ft southwest of the Tritium Facilities. Two wells (Z-15 and ZW-10) are located approximately 1,000 ft east of the Tritium Facilities site. Recent sampling data are discussed in the SRS Annual Environmental Report.

The potential local groundwater recharge zone closest to H-Area is the upland area with downward vertical gradients just to the southeast of H-Area. Recharge areas for the Cretaceous aquifers are located outside the SRS boundary.

Operation of facilities in H-, S-, and Z-Areas have had no effect on groundwater recharge areas. Operation of the SWPF does not affect groundwater. Conversely, SWPF is sufficiently above the water table that groundwater does not impact its operation.

No groundwater injections or withdrawals that would affect the underlying aquifers will occur during SWPF construction or operation.

### 1.4.4 Seismology

#### 1.4.4.1 Earthquake History of the General Site Region

SRNS-IM-2013-00019[2] provides a broad description of the historic seismic record (non-instrumental and instrumental) of the southeastern United States and SRS. Aspects that are of particular importance to SRS include the following:

- The Charleston, South Carolina, area is the most significant seismogenic zone affecting the SRS; and
- Seismicity associated with the SRS and surrounding region is more closely related to South Carolina Piedmont-type activity. This activity is characterized by occasional small shallow events associated with strain release with small-scale faults, intrusive bodies, and the edges of metamorphic belts of Piedmont-type seismicity.

SRS has monitoring networks for the detection of seismic events. These include a Strong Motion Accelerographs Network and a Short-Period Seismic Monitoring Network. These networks are described in SRNS-IM-2013-00019[2]. These networks provide adequate coverage for SWPF structures, so no additional seismic monitoring instruments are located within J-Area.

#### 1.4.4.2 Relationship of Geologic Structure of Seismic Sources in the General Site Region

In the eastern United States, it is not generally known what relationship exists between observed tectonic structures and current earthquake activity that may be associated with those structures. Therefore, in most instances, the seismic sources are inferred, rather than demonstrated by strong correlation with geologic structures. In the region of SRS, reflection seismic data have defined the depth of the seismogenic zone to be about 12 km, which may limit the size of a local earthquake to 5.5 (Kanamori's 1977 Seismic Moment Magnitude). For additional background information, refer to SRNS-IM-2013-00019[2].

#### 1.4.4.3 Development of Design Basis Earthquake

As the consequences of a postulated bounding seismic event at SWPF as determined in S-CLC-J-00084, *Radiological Consequences of a Seismic Event at SWPF*[25] do not challenge the offsite receptor evaluation guideline, those structures, systems, and components (SSCs) credited for worker protection are designated as Safety Significant (SS), in accordance with DOE G 420.1-1, *Nonreactor Nuclear Safety Design Criteria and Explosives Safety Criteria Guide for use with DOE Order 420.1, Facility Safety*[26], and DOE-STD-3009-94, Change Notice No. 3, *Preparation Guide for U.S. Department of Energy Nonreactor Nuclear Facility Documented Safety Analyses*[27].

DOE-STD-1021-93, Change Notice No. 1, *Natural Phenomena Hazards Performance Categorization Guidelines for Structures, Systems, and Components*[28], states that SSCs designated as SS and required to remain functional during and following an NPH event shall be placed in Performance Category (PC)-2, as defined by DOE G 420.1-2, *Guide for the Mitigation of Natural Phenomena Hazards for DOE Nuclear Facilities and Nonnuclear Facilities*[29]. However, SWPF is conservatively designed to PC-3 requirements for NPH based on a recommendation of the Defense Nuclear Facilities Safety Board for improved confinement of radioactive material to protect workers. Non-credited SWPF SSCs are generally designated PC-1, with provisions for upgrading to address two-over-one protection.

Executive Order 12699, *Seismic Safety of Federal and Federally Assisted or Regulated New Building Construction*[30], establishes the minimum seismic requirements for new Federal buildings. The National Earthquake Hazard Reduction Program (NEHRP) updates the provisions required to meet Executive Order 12699 requirements every three years. The Federal Emergency Management Agency (FEMA) Publications 302 and 303, *Recommended Provisions for Seismic Regulations for New Buildings and Other Structures*[31], are applied to the SWPF through the seismic provisions of International Building Code (IBC)-2003[32] because this is the only current model code meeting NEHRP provisions[31]. For PC-2 SSCs, DOE-STD-1020-2002, *Natural Phenomena Hazards Design and Evaluation Criteria for Department of Energy Facilities*[33], directs designers to follow the IBC in its entirety and apply IBC-2003 Seismic Use Group III Criteria (2/3 Maximum Considered Earthquake [MCE] Ground Motion with Importance Factor of 1.5). DOE-STD-1020-2002 also specifies use of the entire IBC-2003 and the application of IBC-2003 Seismic Use Group I Criteria (2/3 MCE Ground Motion) to PC-1 SSCs. Using IBC-2003, the seismic importance factor for PC-1 structures can be either 1.0 or 1.5, depending on the building category established by the use occupancy of the building.

The requirements discussed above for PC-1 and PC-2 NPH protection pertain equally to the IBC-2000[34] and IBC-2003[32] editions. The SWPF Project adopted IBC-2003 for structural design.

#### 1.4.4.4 Design Response Spectra

For PC-1 and PC-2 seismic design, the mapped maximum considered spectral response accelerations for the SWPF are obtained from figures in IBC-2003[32], an acceptable successor document to IBC-2000[34], which reproduces the latest FEMA/NEHRP seismic maps. For PC-3

seismic design, revised site-specific response spectra (SRS 2500 Year Scaled Deaggregation Spectra [Site 2][35]) developed as part of the 10-year update of the Probabilistic Seismic Hazard Analysis, was used to design the SWPF. The seismic load design for SWPF process-related SSCs is determined in accordance with DOE-STD-1020-2002[33] and IBC-2003 requirements for PC-1, PC-2, and PC-3 SSCs. Unless otherwise required due to plan irregularity (stiffness or mass), the Northern Facility Support Area (FSA), Eastern FSA, Cold Chemicals Area, AFF, and Administration Building are analyzed by using the equivalent static load method described in Section 6.5.1 of P-ESR-J-00002, *SWPF Structural Acceptance Criteria*[36]. Response Spectra Analysis, described in Section 6.5.3 of P-ESR-J-00002, is performed on the Central Processing Area portion of the Process Building. For PC-1 and PC-2 structures, horizontal seismic loads are applied in two orthogonal directions, as provided by IBC-2003 or American Society of Civil Engineers (ASCE) 7-02, *Minimum Design Loads for Buildings and Other Structures*[37]. Vertical seismic loading is either additive or subtractive, and will be applied as required by IBC-2003 and ASCE 7-02. For PC-3 structures, seismic loading is applied by using time histories developed from site-specific ground response spectra in three orthogonal directions (two horizontal and one vertical component).

The design and construction of remaining buildings and structures within the SWPF site comply with the applicable requirements of IBC-2003[32] and other commercial standards, as well as the applicable provisions of Executive Order 12699[30] and NEHRP.

## 1.5 Natural Phenomena Threats

This subchapter identifies and describes natural phenomena events considered to be potential accident initiators at specific SRS facilities.

### 1.5.1 Flood

#### 1.5.1.1 Flood History

All floods represented by data in this subchapter were the result of excess precipitation runoff and the associated creek(s) or stream(s) flooding. There have been no floods caused by surge, seiche, dam failure, or ice jams. For additional information on the flood history of the Savannah River, UTRC, and Tims Branch, see SRNS-IM-2013-00019[2].

#### 1.5.1.2 Flood Design Considerations

All safety-related structures are located on topographic high points and are well inland from the coast. The only significant impoundments, Par Pond and L Lake, are relatively small and sufficiently lower than any of the safety-related SWPF SSCs, such that there is no safety threat to safety-related structures from high water.

As discussed in Subchapter 1.5.1.4, the SWPF is located on a relatively elevated region of the SRS. Therefore, flooding from surface streams is not a credible hazard.

#### 1.5.1.3 Effects of Local Intense Precipitation

Unusually intense local rainfall occurred on the SRS on July 25, 1990; August 22, 1990; October 10-12, 1990; and October 22-23, 1990. A report describing these events concluded that although over 6 inches of rain fell in a 10-square-mile area during the August 22 storm, this amount is just 20% of the greatest possible theoretical depth of precipitation for a given duration and drainage area (probable maximum precipitation [PMP]) of 31.0 inches (Hydrometeorological Report No. 51: *Probable Maximum Precipitation Estimates, United States East of the 105$^{th}$ Meridian*[38]). This rainfall was adjusted to a point PMP of 19 inches in 1 hour, as shown by Hydrometeorological Report No. 52, *Application of Probable Maximum Precipitation Estimates – United States East of the 105$^{th}$ Meridian*[39], and used to generate the probable maximum flood (PMF) for SRS. A synthetic hydrograph was used to determine peak flow. Further discussion is provided in SRNS-IM-2013-00019.

#### 1.5.1.4 PMF on Streams and Rivers

The PMF values for the Savannah River and for UTRC were determined by using U.S. Nuclear Regulatory Commission Regulation (NUREG) 1.59, *Design Basis Floods for Nuclear Power Plants*[40]. The PMF of 1,001,000 cfs for the Savannah River at VEGP and thus at SRS, reported in Appendix B of the NUREG 1.59, is slightly greater than the PMF flood discharge of 895,000 cfs determined by Southern Company Services in the *Alvin W. Vogtle Electric Generating Plant,*

*Unit 1 and Unit 2, Final Safety Analysis Report*[41] (SAR). Procedures outlined in NUREG 1.59 were used to verify the PMF for the Savannah River and to estimate the PMF for UTRC.

The estimated PMF for UTRC results in a water level between 140 and 160 ft above msl near the SWPF. This is in excess of 100 ft below average grade (275 ft above msl) at the SWPF. The PMF for a small unnamed tributary of UTRC, located about 0.4 mile northwest of F-Canyon, corresponds to a peak stage of 225 ft above msl, which is about 50 ft below average grade at the SWPF. The PMF for Crouch Branch, which is about 100 ft below the nearest and lowest Tank Farm safety-related structure, corresponds to a peak stage of 225 ft above msl. This is about 50 ft below average grade at the SWPF.

#### 1.5.1.4.1 PMP

The PMP is defined as the "greatest possible theoretical depth of precipitation for a given duration and drainage area". The PMP for 10 square miles and 1 hour is 15.7 inches and, for 6 hours, is 31.0 inches.

Unusually intense local rainfalls occurred on SRS on July 25, August 22, October 10-12, and October 22-23, 1990. A report on these unusual rainfalls was prepared by the Environmental Transport Group of the Savannah River Technology Center (now Savannah River National Laboratory). The report concluded that, even though over 6 inches of rain fell in a 10-square-mile area during the August 22 storm, this amount is just 20% of the 6-hour PMP of 31.0 inches (SRNS-IM-2013-00019[2]).

In addition, a large storm system in the Augusta, Georgia - Aiken, South Carolina, region caused heavy rainfall on October 11 and 12, 1990, resulting in Savannah River and local flooding. Up to 12 inches of rainfall were measured in the region.

#### 1.5.1.4.2 Precipitation Losses

For conservatism, precipitation losses were assumed to be zero in development of the PMF and PMP for all watersheds on the SRS.

#### 1.5.1.4.3 Runoff Model

Using runoff and flood routing routines developed by the U.S. Army Corps of Engineers (including HEC-1), the PMF at VEGP was determined to be 895,000 cfs, assuming no valley storage effect. Because the VEGP runoff model PMF is about 10% less than the PMF of 1,001,000 cfs for the Savannah River reported in NUREG 1.59[40], the larger PMF was used in this analysis.

The PMF flood peak for UTRC was calculated by using the simplified method in NUREG 1.59[40]. The PMF was plotted by using the figures in Appendix B of NUREG 1.59 for drainage areas ranging from 100 to 20,000 square miles; interpolation of the logarithmic plot then provided the PMF for the 163-square-mile watershed of UTRC.

#### 1.5.1.4.4 PMF Flow

Appendix B of NUREG 1.59[40] reported the PMF to be 1,001,000 cfs for the Savannah River at VEGP, corresponding to an elevation of 138.5 ft above msl. The *VEGP Final SAR*[41] estimates a PMF peak discharge of 895,000 cfs, ignoring the effect of valley storage of floodwater, and a PMF of 540,000 cfs if valley storage upstream from the site is considered. The maximum flood wave elevations determined in the *VEGP Final SAR* were 41.5 ft msl and 38.4 ft msl, respectively, well below the SWPF average grade elevation of 275 ft above msl. The PMF determined from NUREG 1.59 for the Savannah River does not consider failure of any upstream dams. All dam failure scenarios are considered in Subchapter 1.5.1.5.

#### 1.5.1.4.5 Water Level Determinations

For the Savannah River, the PMF stage of 138.5 ft above msl computed for this analysis was compared to the PMF stages generated in the *VEGP Final SAR*[41] and found to be conservative.

#### 1.5.1.4.6 Coincident Wind Wave Activity

For Savannah River and UTRC, the extent of flooding is far removed from the SWPF in both distance and elevation. Thus, it is inconceivable that wind-induced waves would affect the site (SRNS-IM-2013-00019[2]).

### 1.5.1.5 Potential Dam Failures (Seismically Induced)

#### 1.5.1.5.1 Reservoir Description

The only significant dams or impoundment structures that could affect the safety of SRS are large dams on the Savannah River and its tributaries upstream of Augusta, Georgia. Section 1.4.2.1 of SRNS-IM-2013-00019[2] contains information on these structures. The Stevens Creek Dam is owned by SCE&G (SRNS-IM-2013-00019). All other dams on the Savannah River are owned by the U. S. Army Corps of Engineers. The dams on the Tugaloo and Tallulah rivers are owned by Georgia Power Company. The dams on the Keowee and Little Rivers are owned by Duke Power Company.

#### 1.5.1.5.2 Dam Failure Permutations

A domino failure of the dams on the Savannah River and its tributaries upstream of VEGP was analyzed in the *VEGP Final SAR*[41]. The worst possible case resulted from Jocassee Dam failing during a combined standard project flood and earthquake, with the resulting chain reaction.

Using conservative assumptions, this worst dam failure would yield a peak flow of 2,400,000 cfs at J. Strom Thurmond Dam. This rate, undiminished in magnitude, was transferred to below Augusta, Georgia. However, because of the great width of the flood plain, routing of the dam failure surge to the VEGP site (Savannah River Mile 151) resulted in a peak discharge of 980,000 cfs, with a corresponding stage of 141 ft above msl. The SWPF is sufficiently above this flood stage to have no impact from dam failure events.

#### 1.5.1.5.3 Unsteady Flow Analysis of Potential Dam Failures

No dams are located near SRS areas. Therefore, this subchapter does not apply.

#### 1.5.1.5.4 Water Level at Facility Site

The peak water surface elevation of the Savannah River that corresponds to wave run-up of a wind-induced wave, superimposed upon the passage of a flood wave resulting from a sequence of dam failures, is discussed in Subchapter 1.5.1.5.2.

### 1.5.1.6 Probable Maximum Surge and Seiche Flooding

No large water bodies exist near the Site; therefore, this subchapter does not apply.

### 1.5.1.7 Ice Flooding

Because of regional climatic conditions, the formation of significant amounts of ice on streams and rivers rarely occurs. The moderate water temperature extremes in the pools of Hartwell, Richard B. Russell, and J. Strom Thurmond Dams make ice formation on the Savannah River at SRS unlikely. Because the SWPF is so much higher than the nearest streams and rivers, it is not considered credible that it could be affected by ice flooding, even if the climatic conditions were conducive to ice formation.

### 1.5.1.8 Water Canals and Reservoirs

There are no operable large water canals or reservoirs at SRS that could affect flooding of the SWPF.

### 1.5.1.9 Channel Diversions

There is no historical record of diversions of streams or rivers in the Site area.

### 1.5.1.10 Flooding Protection Requirements

Special flooding protection requirements are not necessary to ensure the safety of the SWPF, because it is located at elevations well above the maximum flood. Flooding due to stormwater runoff has been evaluated and it has been determined that localized flood waters will not exceed the finished floor elevations of the Process Building (C-CLC-J-00030, *SWPF Design Basis Flood Hydrology*[42]).

### 1.5.1.11 Low Water Considerations

#### 1.5.1.11.1 Low Flow in Rivers and Streams

Low flow in the Savannah River adjacent to SRS is regulated by J. Strom Thurmond Dam and the New Savannah Bluff Lock and Dam. For additional discussion, see SRNS-IM-2013-00019[2].

In addition, the SWPF does not take its water supply from the Savannah River, but relies on water wells located on the SRS.

#### 1.5.1.11.2 Low Water Resulting from Surges or Seiches

This situation does not apply because SRS does not withdraw water from a large body of water, nor is it located in a region of active seismicity or volcanism that produce such surges.

#### 1.5.1.11.3 Historical Low Water

The minimum daily flow for UTRC is 46 cfs at Highway 278, 79 cfs near SRS Road A, and 72 cfs near SRS Road C (SRNS-IM-2013-00019[2]). Although the period of data recording is short, UTRC has a smaller range of flow variation than other streams in the area.

Tims Branch was gauged from March 1974 through September 1996 near its confluence with UTRC. The minimum daily flow for Tims Branch was 1 cfs. Although the period of data recordings is short, Tims Branch has a smaller range in flow variation than other streams in the area (SRNS-IM-2013-00019[2]).

#### 1.5.1.12 Future Control

Minimum flow conditions are controlled mainly by upstream dam releases, and no additional users of large amounts of water are anticipated.

### 1.5.2 Earthquake

Earthquakes are discussed in Subchapter 1.4.4.

### 1.5.3 High Wind

Table 10 in SRNS-IM-2013-00019[2] summarizes the predicted maximum “straight-line” (non-tornadic) wind speeds (3-second gusts) for any point on SRS for return periods from 10 to 100,000 years. The predicted values were generated from a Gumbel extreme value distribution function using historical wind speed (gust) data from the SRS meteorological database and from nearby National Weather Service stations (Columbia, South Carolina, and Augusta, Macon, and Athens, Georgia). The 100-year 3-second wind speed was estimated to be 94 miles per hour.

### 1.5.4 Tornado

Tornadoes are discussed in SRNS-IM-2013-00019[2]. Eleven tornadoes have occurred at or in close proximity to SRS since operations began in the 1950s. A tornado that occurred on October 1, 1989, knocked down several thousand trees over a 16-mile path across the southern and eastern portions of the site. Wind speeds produced by this F-2 tornado were estimated to be as high as 150 miles per hour (240 kilometers per hour). Four F-2 tornadoes struck forested areas of SRS on three separate days during March 1991 (SRNS-IM-2013-00019). Considerable damage to trees was observed in the affected area. In April 2009, an EF-3 tornado caused extensive damage, including destroyed buildings, along a path from Grovetown, Georgia to New Ellenton, South Carolina, including areas immediately outside of the site boundaries. The most recent tornado at SRS touched down in the D-area and moved northeast causing damage in N-area during November 2011. This tornado was ranked an EF-0. The average frequency of a tornado striking any specific point at SRS was estimated to be $1.15 \times 10^{-3}$ per year, or approximately once every 870 years.

## 1.6 External Man-made Threats

This subchapter provides identification of specific external man-made phenomena associated with the Site that are considered to be potential accident initiators, exclusive of sabotage and terrorism.

### 1.6.1 Transportation

Offsite and onsite roadways and the SRS rail network are discussed in the subchapters that follow.

At the closest point, the Savannah River is approximately nine miles from J-Area. Other than rare barge deliveries to the downstream Barnwell Nuclear Low-Level Waste Site and potential future large-load barge transportation for SRS facilities or VEGP, essentially no commercial waterborne transportation takes place on the Savannah River between Augusta and Savannah, Georgia (WSRC-RP-89-715: *Safety Analysis: Evaluation of Accident Risks in the Transportation of Hazardous Materials by Truck and Rail at the Savannah River Plant*[43]). Private and commercial recreational purposes comprise the primary use. See Subchapter 1.6.1.5 for additional information.

#### 1.6.1.1 Roads and Highways

Roads and highways are the primary means of travel to areas outside the SRS site, as well as between population centers and workplaces within the SRS site. Roads and highways with the highest traffic volumes in the vicinity of the Site are in and around the city of Augusta, Georgia.

Various South Carolina State highways lead to the northern, eastern, and southern boundaries of SRS, although public access into SRS is limited. These are discussed in SRNS-IM-2013-00019[2].

Many different vehicles and types of packaging are used to transport hazardous materials on the SRS. Materials transported by truck at SRS include radioactive materials in the form of powders, bulk liquids, samples, solid billets, fabricated components, gases, solid wastes, and contaminated equipment. Non-radioactive hazardous material forms that are transported include bulk liquids, granular solids, liquefied gases, laboratory reagents, and janitorial supplies (WSRC-RP-89-715[43]). If these materials are involved in an onsite accident, activation of emergency procedures for chemical and/or radiological airborne release is required (SRNS-IM-2013-00019[2]).

For a detailed analysis of accident consequences and risks resulting from hazardous material transportation at SRS, see SRNS-SA-2008-00004, *Transportation Safety Document*[44] .

Commercial trucks carrying hazardous materials operate on South Carolina Highway 125. The distance to J-Area is approximately seven miles.

A detailed analysis of accident consequences and risks resulting from materials transported on Highway 125 (a public transportation corridor) has not been performed because these shipments are not monitored, nor is an inventory kept. Impacted hazardous materials delivered to SRS are evaluated in the onsite Transportation Safety Document (SRNS-SA-2008-00004[44]).

#### 1.6.1.2 Railroads

The existing rail system that serves SRS and the surrounding region is discussed in SRNS-IM-2013-00019[2]. CSX Transportation Incorporated (CSX) operates the line through SRS from Augusta, Georgia, southeastward through Allendale, South Carolina, to Yemassee, South Carolina. CSX operates and maintains the portion of track from the junction with the Augusta, Georgia-Yemassee, South Carolina track to the Dunbarton Station on SRS and to Chem Nuclear Systems, Incorporated near Snelling, South Carolina. Close to the site, the Norfolk/Southern Railway owns two tracks that traverse the five-mile (eight-km) area outside the SRS boundary. One track extends east from the Augusta area to Charleston, South Carolina, passing through Aiken, Williston, and Blackville, South Carolina. The other track extends south from Augusta, turning eastward at the Burke County line to a point approximately three miles (five km) from SRS and continues south to Savannah, Georgia.

In addition, SRS operates and maintains its own railroad system for providing direct rail service to various areas within the site. Due to shipping container specifications and the administrative procedures, it is unlikely that an onsite transportation accident involving radioactive materials would have a significant effect except near the accident (SRNS-SA-2008-00004[44]). Detailed discussion of railroad transportation can be found in SRNS-IM-2013-00019[2].

#### 1.6.1.3 Airports and Air Traffic

Public airports located in South Carolina and Georgia within a radius of approximately 65 miles from the center of SRS are listed in SRNS-IM-2013-00019[2]. Bush Field in Augusta, Georgia, and the Columbia Municipal Airport in Lexington County, South Carolina, are the only two airports within 65 miles of SRS that provide scheduled air passenger services.

#### 1.6.1.4 Airspace Restrictions

The air space restriction over SRS was lifted in 1976. Until that time, the frequency of unauthorized flights over the restricted airspace was about 100 per year. Since 1976, the frequency of flights over the Site is estimated to have increased to about 4,000 per year (SRNS-IM-2013-00019[2]). For national security reasons, Federal Aviation Administration sectional aeronautical charts request pilots to avoid commercial flight below 2,000 ft msl in the area over SRS. For further discussion, see SRNS-IM-2013-00019[2].

#### 1.6.1.5 Waterborne Transportation

Since 1979, virtually no commercial shippers have used the river. Further discussion is located in SRNS-IM-2013-00019[2].

### 1.6.2 Missiles and Blast Effects

Energy from man-made sources capable of generating missiles and blast effects that can impact the functioning of SS items is discussed in the Hazard and Accident Analysis (see Chapter 3.0).

## 1.7 Nearby Facilities

SRNS-IM-2013-00019[2] identifies nuclear, industrial, and military facilities within a 50-mile radius of the SRS center that have potential safety importance to SRS.

### 1.7.1 Nuclear Facilities

#### 1.7.1.1 Non-Savannah River Site Nuclear Facilities

There are two major non-SRS nuclear facilities within 50 miles of SRS. Additional information about these facilities is provided in SRNS-IM-2013-00019[2].

#### 1.7.1.2 Savannah River Site Nuclear Facilities

This subchapter discusses nuclear facilities on SRS that are in proximity to and have safety implications for the SWPF.

##### 1.7.1.2.1 S-Area

The DWPF in S-Area is directly north of and adjacent to the SWPF. It receives treated waste from the SWPF (monosodium titanate [MST]/sludge solids and concentrated salt solution [strip effluent]). DWPF processes sludge, further treats the waste, vitrifies it, and stores it for later disposal at a national high-level waste repository. Because the DWPF structures and engineered safety features provide an effective radiological confinement system designed to control radionuclide releases to the environment during normal and abnormal operating conditions, it poses no significant risk to the SWPF. Site Manual SCD-7[4] is in place and DWPF and site personnel are trained to respond to DWPF events accordingly.

##### 1.7.1.2.2 H-Area

HTF, south of the SWPF, consists of 2 radioactive LW evaporators and 29 large underground LW storage tanks that process and store radioactive waste in the form of aqueous salt solution (supernate), concentrated precipitated salt (saltcake), or aqueous suspensions of insoluble metallic oxides (sludge). HTF includes Building 299-H, the Concentration, Storage, and Transfer Facility (CSTF) decontamination facility. Waste feed for the SWPF is batched in HTF before transfer to the SWPF. Decontaminated salt solution (DSS) from the SWPF is routed through an underground transfer line to the SPF, where it is mixed with grout and disposed in above-ground vaults.

Also south of the SWPF is H-Area Canyon, which contains process equipment to dissolve irradiated reactor fuel and target assemblies and extract and consolidate selected radioisotopes.

The Tritium Facilities, located south of the SWPF in H-Area, conduct tritium extraction, unloading, mixing, and loading operations (SRNS-IM-2013-00019[2]). Because the Tritium Facilities' structures and engineered safety features provide an effective radiological

confinement system designed to control radionuclide releases to the environment during normal and abnormal operating conditions, it poses no significant risk to the SWPF.

The RBOF is also located south of SWPF in H-Area. Offsite fuel to be processed in H-Canyon was packaged and stored at RBOF, but the facility is currently shut down and de-inventoried. Radioactive waste generated by RBOF is stored in the LW tanks in H-Area (SRNS-IM-2013-00019[2]). Because RBOF structures and engineered safety features provide an effective radiological confinement system designed to control radionuclide releases to the environment during normal and abnormal operating conditions, it poses no significant risk to the SWPF.

The ETP is located south of the SWPF in H-Area. ETP collects and treats routine process wastewater (e.g., waste evaporator overheads), contaminated cooling water from Canyon facilities (Canyons), and stormwater from F- and H-Areas. The ETP is a Radiological/Low Hazard Chemical Facility with structures and engineered safety features that provide an effective radiological confinement system designed to control radionuclide release to the environment during normal and abnormal operating conditions. Thus, its operation poses no significant risk to the SWPF.

The CIF is located on the east side of H-Area. The CIF was constructed to incinerate SRS hazardous, mixed, and low-level radioactive waste, but the facility is currently shut down and de-inventoried. Because CIF structures and engineered safety features provide an effective radiological confinement system designed to control radionuclide releases to the environment during normal and abnormal operating conditions, it poses no significant risk to the SWPF.

Because all H-Area facilities structures and engineered safety features provide an effective radiological confinement system designed to control radionuclide release to the environment during normal and abnormal operating conditions, they pose no significant risk to the SWPF. Site Manual SCD-7[4] is in place and H-area and site personnel are trained to respond to H-area events accordingly.

#### 1.7.1.2.3 SPF

The SPF is located about one mile north of the SWPF in Z-Area. It receives DSS from the SWPF and CSTF and concentrates from ETP. The SPF process mixes the DSS and ETP concentrates with grout for disposal in above-ground concrete vaults in Z-Area.

Because all SPF structures and engineered safety features provide an effective radiological confinement system designed to control radionuclide release to the environment during normal and abnormal operating conditions, they pose no significant risk to the SWPF. Site Manual SCD-7[4] is in place and SPF and site personnel are trained to respond to SPF events accordingly.

#### 1.7.1.2.4 F-Area

The FTF is approximately 2.5 miles west of the SWPF. It consists of 1 LW evaporator and 22 large underground LW storage tanks that process and store radioactive waste in the form of aqueous salt solution (supernate), concentrated, precipitated salt (saltcake), or aqueous

suspensions of insoluble metallic oxides (sludge). FTF waste must be transferred to HTF and batched in HTF before transfer to the SWPF.

Adjacent to FTF is the F-Area Canyon, which contains process equipment to dissolve irradiated reactor fuel and target assemblies, and extract and consolidate selected radioisotopes. F-Area Canyon is deactivated and de-inventoried in anticipation of decontamination and decommissioning.

Because all operating F-Area facilities' structures and engineered safety features provide an effective radiological confinement system designed to control radionuclide release to the environment during normal and abnormal operating conditions, they pose no significant risk to the SWPF. Site Manual SCD-7[4] is in place and F-Area and site personnel are trained to respond to F-Area events accordingly.

#### 1.7.1.2.5 Nuclear Production Reactors

Five inoperable reactor facilities are located within a 10-mile radius of SWPF. Currently, four of these reactors (C, L, P, and R) are permanently shut down and defueled. One reactor (K Reactor) is defueled and deactivated, with a portion of its 105-K Building used for secure storage of production material under the K-Area Material Storage Program. Some production material is also stored in the former L Reactor Disassembly Basin. Because of large distances separating K Reactor and L Reactor from the SWPF, an accident in one facility produces no significant radiological consequence for workers in the other facilities.

#### 1.7.1.2.6 Waste Transfer Lines and Intermediate Waste Transfer Facilities

Inter-facility transfers of liquid waste are the predominant operations, whereby the SWPF interacts with adjacent facilities (i.e., DWPF, HTF, and SPF). These transfers are conducted in accordance with the Site Manual 1S, *Waste Acceptance Criteria Manual*[45], to ensure that the assumptions (e.g., inhalation dose potential, hydrogen generation rates, pH) of each facility's hazard and accident analyses are maintained. Because the structures and engineered safety features for all waste transfer lines and waste transfer facilities provide an effective radiological confinement system designed to control radionuclide release to the environment during normal and abnormal operating conditions, they pose minimal risk to the SRS and SWPF workers. Site Manual SCD-7[4] is in place and DWPF, HTF, SPF and site personnel are trained to respond to waste transfer line and intermediate waste transfer facilities events accordingly.

#### 1.7.1.2.7 E-Area

The E-Area Solid Waste Management Facility (SWMF) occupies 195 acres between the F- and H-Areas. The SWMF is used for permanent disposal of low-level radioactive solid waste and interim storage of radioactive, hazardous, and mixed solid waste generated at SRS, as well as occasional special shipments from offsite. The SWMF also provides assaying, repackaging, and interim storage of transuranic waste. Waste handling and disposal activities pose minimal risk to SWPF workers.

### 1.7.2 Industrial Centers

The five-mile area surrounding SWPF lies entirely within SRS boundaries. Therefore, there are no industrial centers other than onsite SRS facilities that need to be considered (SRNS-IM-2013-00019[2]).

### 1.7.3 Military Facilities

Information on military facilities is discussed in SRNS-IM-2013-00019[2]. Fort Gordon, the nearest military installation, is located on 55,000 acres approximately 9 miles (14 km) southwest of Augusta, Georgia, between U.S. Routes 1 and 78. The 755-bed Dwight David Eisenhower Army Medical Center, located at Fort Gordon, serves as the regional military medical facility. Details for Fort Gordon and other military facilities in Georgia and South Carolina are discussed in SRNS-IM-2013-00019.

U.S. military facilities located in the vicinity present no special hazards to SRS. They serve as additional resources in case of an emergency at SRS.

## 1.8 Environmental Analyses

DOE/EIS-0082-S2, *Savannah River Site Salt Processing Alternatives Final Supplemental Environmental Impact Statement*[46], issued in June 2001, describes the *National Environmental Policy Act (NEPA) of 1969*[47] process that DOE used in selecting the salt processing alternatives. DOE/EIS-0082-S2 and associated *Record of Decision: Savannah River Site Salt Processing Alternatives*[48] concluded that a salt waste processing facility that utilized MST to remove and concentrate actinides and the CSSX process to remove and concentrate radioactive $^{137}$Cs could be built and operated without significant environmental impact. Further information concerning SWPF environmental protection activities is presented in S-EIP-J-00001, *SWPF Environmental Plan*[49].

Environmental monitoring during SWPF operation is conducted in accordance with V-ESR-J-00019, *SWPF Permitting and Monitoring Requirements Interface Control Document (ICD-19)*[50].

This page intentionally left blank.

## 1.9 Figures

**Figure 1.9-1. Savannah River Site Location**

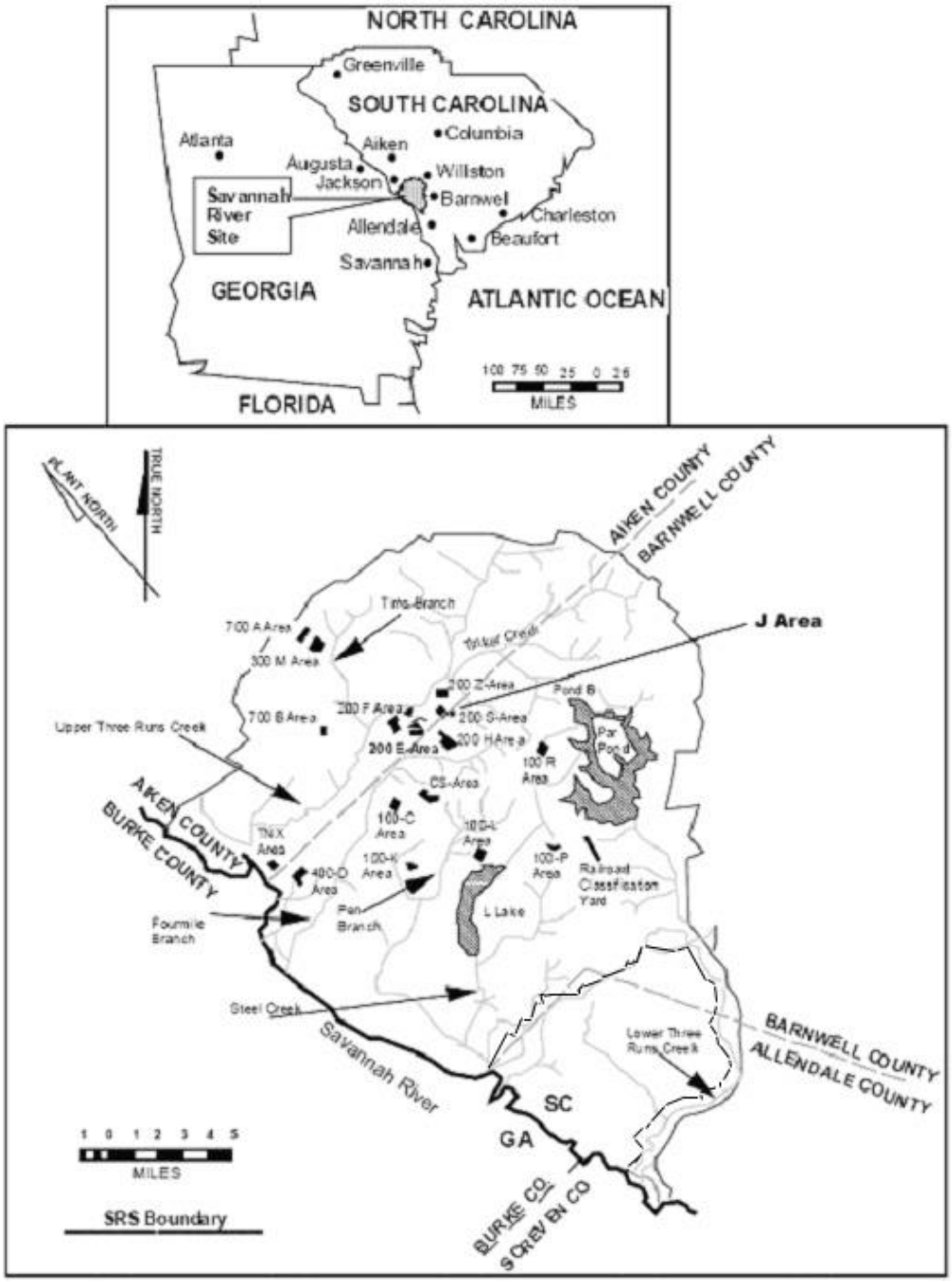

**Figure 1.9-2. SRS Facility Areas near SWPF at J-Area**

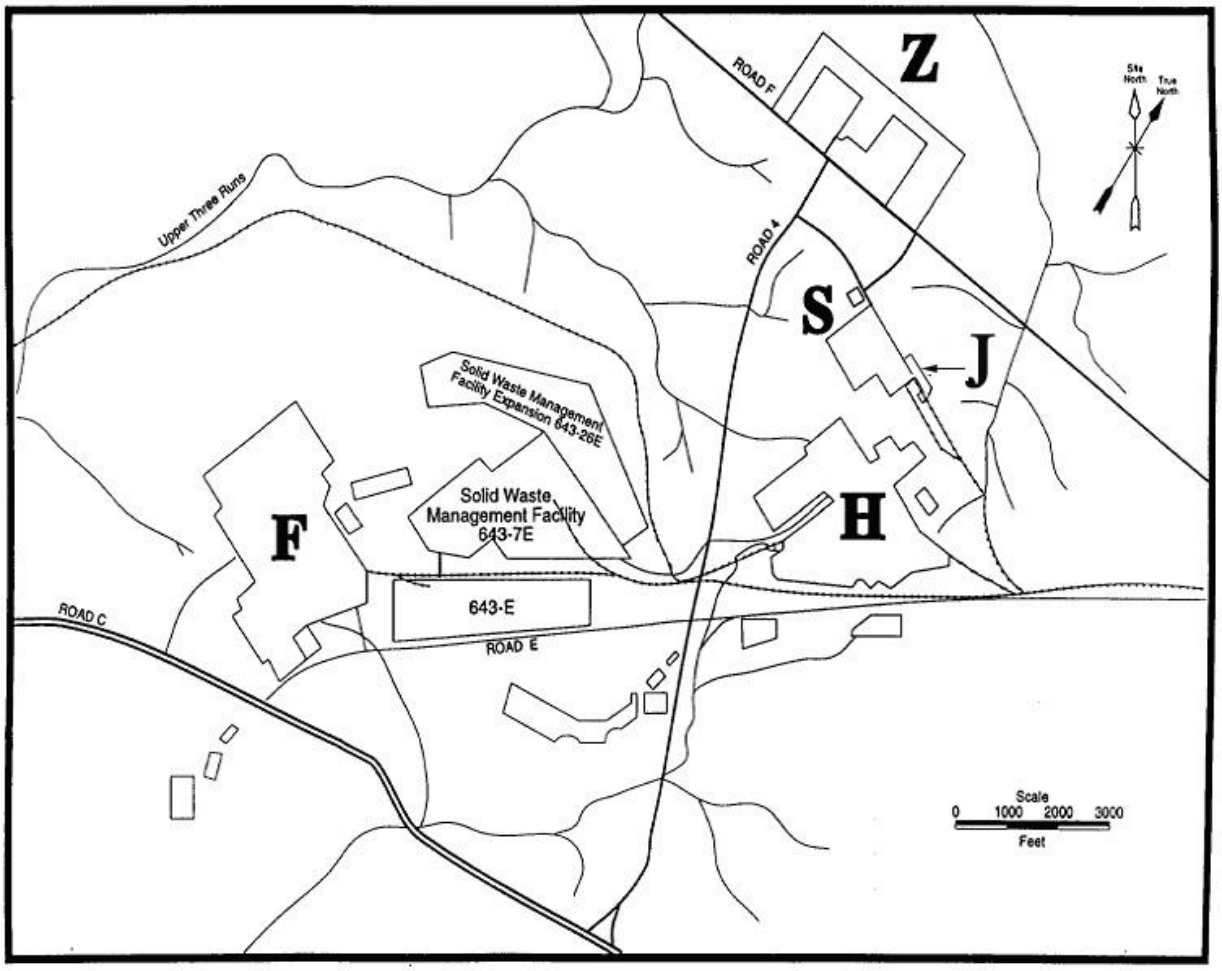

**Figure 1.9-3. Electrical Transmission Lines**

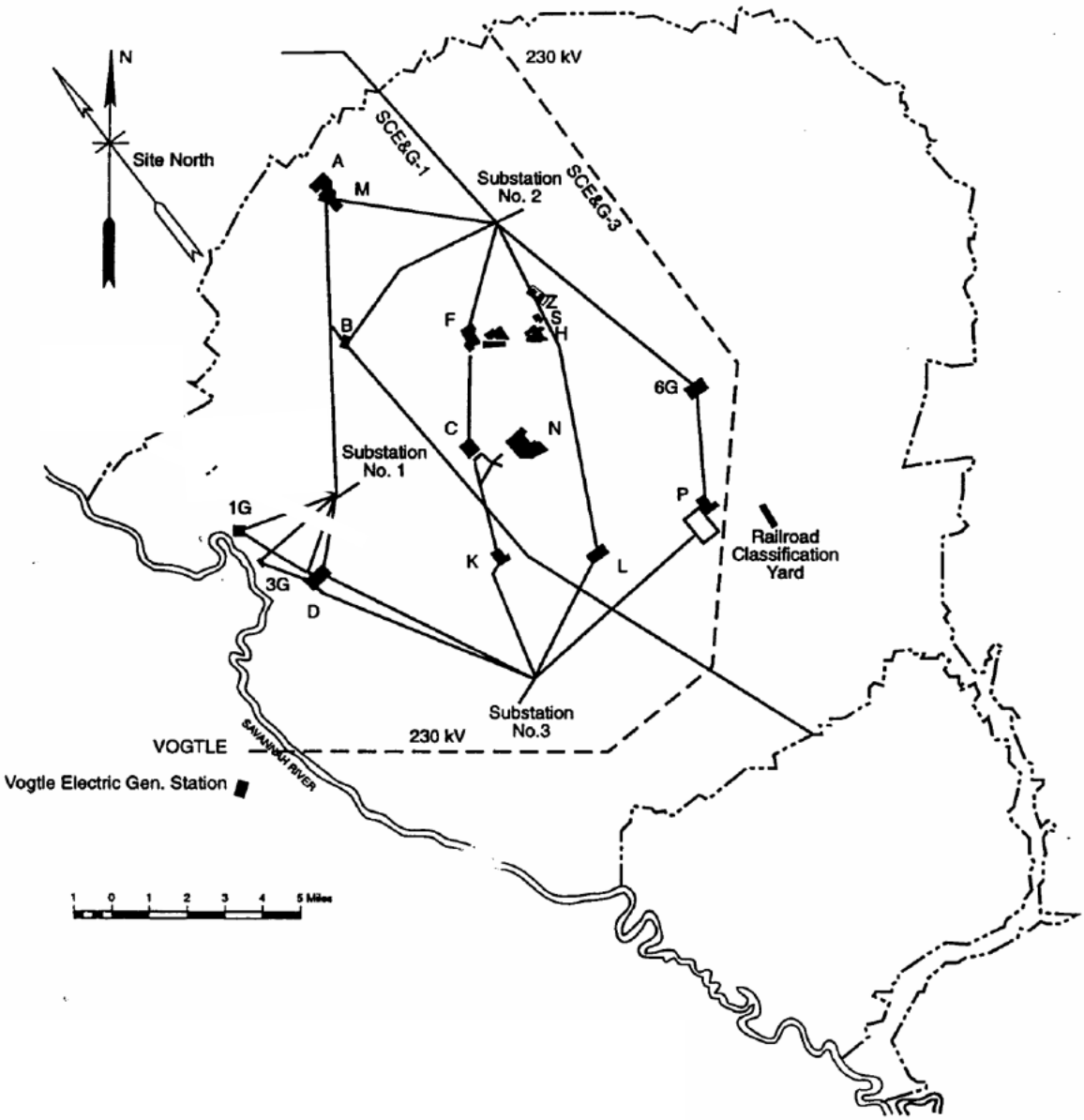

**Figure 1.9-4. SWPF Site Plot**

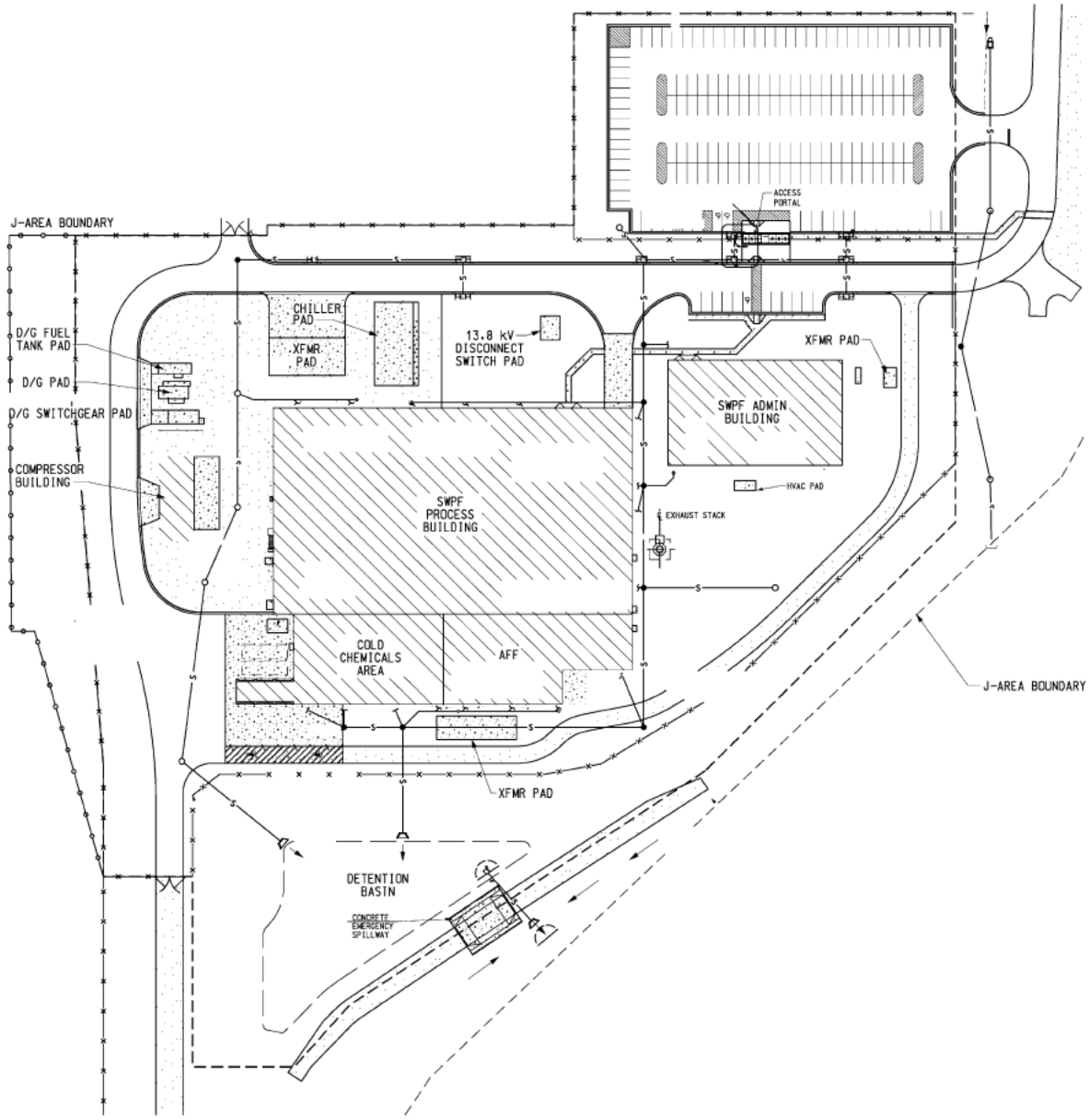

**Figure 1.9-5. SRS Ingestion Exposure Emergency Planning Zone**

**Figure 1.9-6. Map of 50-Mile Radius Around SRS**

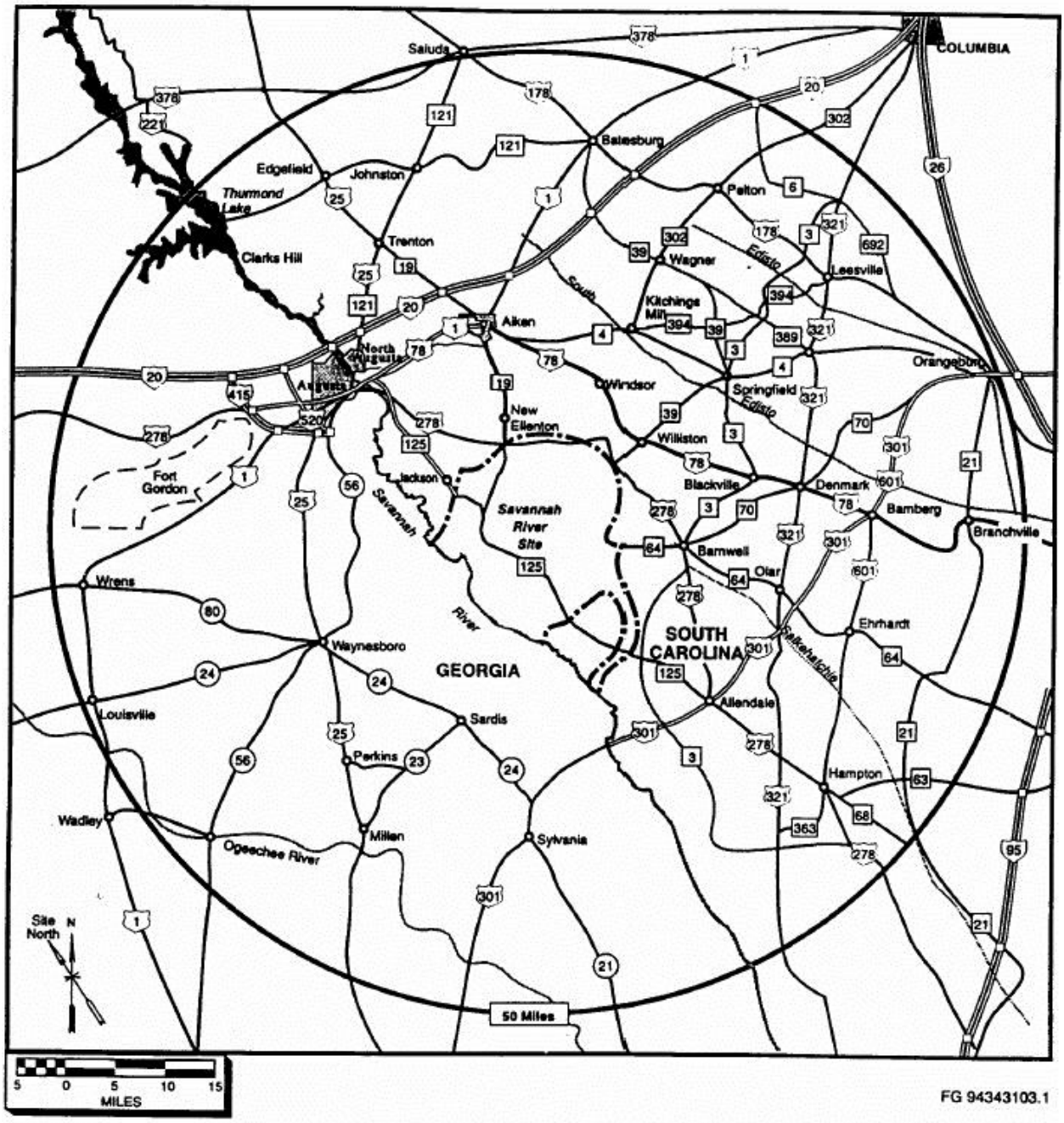

**Figure 1.9-7. Locations of SRS Meteorological Monitoring Towers**

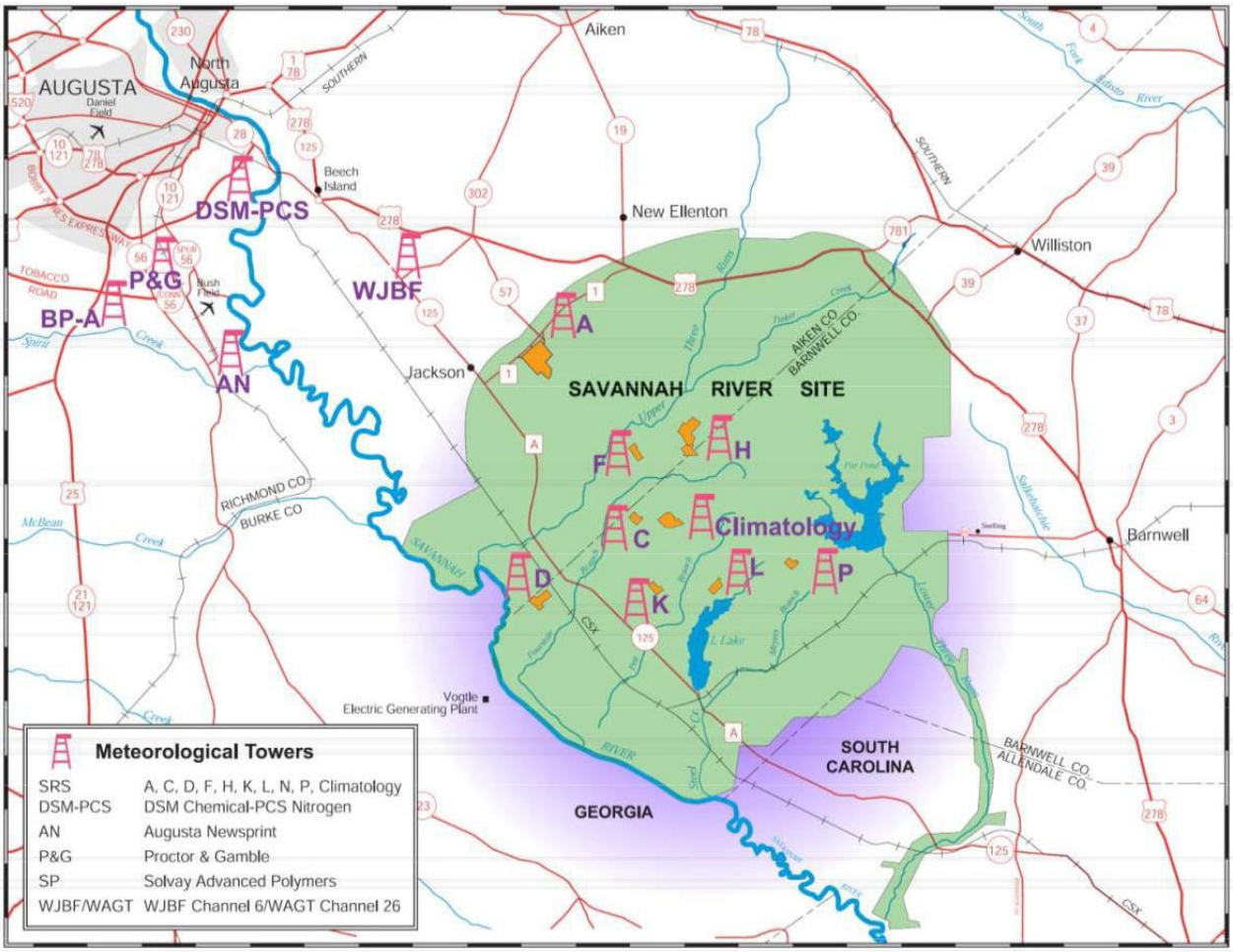

**Figure 1.9-8. Topographic Map of J-Area and Adjacent SRS Facilitites**

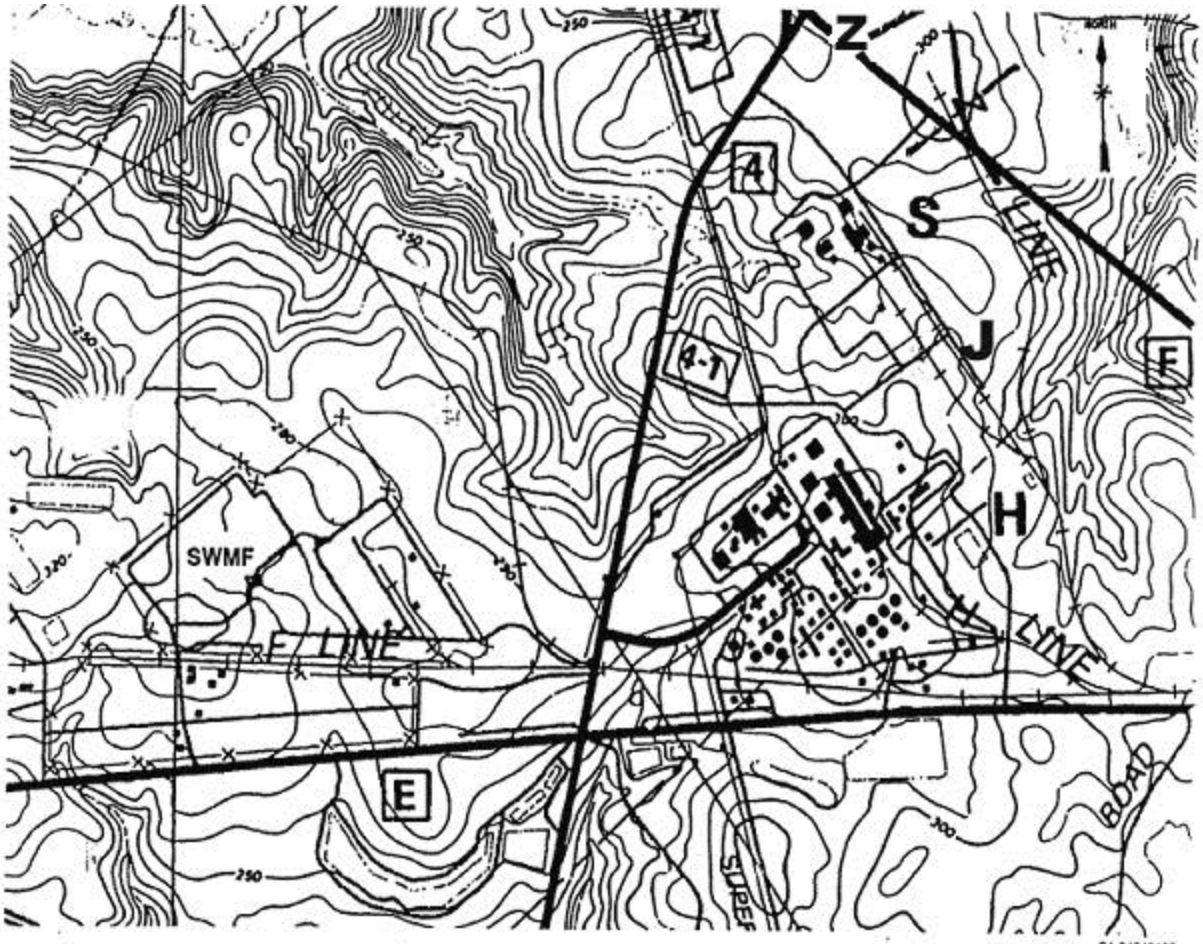


SOURCE: USGS 1:48,000 topographic map, Savannah River Plant. Data: 1964-1981. Revised 1987.

## 1.10 References

[1] 10 CFR 830, *Nuclear Safety Management*.

[2] SRNS-IM-2013-00019, *Savannah River Site Site Characteristics and Program Descriptions*, Revision 1. Savannah River Nuclear Solutions, Aiken, South Carolina.

[3] S-RCP-J-00001, *SWPF Standards/Requirements Identification Document*. Parsons, Aiken, South Carolina.

[4] Site Manual SCD-7, *SRS Emergency Plan*. Savannah River Site, Aiken, South Carolina.

[5] S-SRI-J-00001, *SWPF J-Area and Parsons Offsite Facilities Site Security Plan*. Parsons, Aiken, South Carolina.

[6] Permit No. SCR000000, *NPDES General Permit for Storm Water Discharges Associated with Industrial Activity (except construction activity)*. South Carolina Department of Health and Environmental Control, Bureau of Water, Columbia, South Carolina. Issued September 1, 2016; effective October 1, 2016; Expires September 30, 2021.

[7] Q-CLC-J-00006, *Level II Analysis of SWPF Toxic Air Emissions and Evaluation of Chemical Emissions Exposure Levels Adjacent to SWPF*, Revision 0. Parsons, Aiken, South Carolina.

[8] SCR 61-62.5, Standard 7, Air Pollution Control Regulations and Standards: Air Pollution Control Standards: *Prevention of Significant Deterioration*. Effective June 24, 2005.

[9] SCR 61-62.5, Standard 2, Air Pollution Control Regulations and Standards: Air Pollution Control Standards: *Ambient Air Quality Standards*. South Carolina Department of Health and Environmental Control, Columbia, South Carolina. Effective September 24, 2004.

[10] SCR 61-62.5, Standard 8, Air Pollution Control Regulations and Standards: Air Pollution Control Standards: *Toxic Air Pollutants*. South Carolina Department of Health and Environmental Control, Columbia, South Carolina. Effective June 22, 2007.

[11] TV-0080-0041, *Savannah River Site Part 70 Air Quality (Title V Operating) Permit*. South Carolina Department of Health and Environmental Control, Columbia, South Carolina. Issued February 19, 2003.

[12] SCR 61-62.70, Air Pollution Control Regulations and Standards: *Title V Operating Permit Program*. South Carolina Department of Health and Environmental Control, Columbia, South Carolina. Effective September 24, 2004.

[13] 40 CFR 61, *National Emission Standards for Hazardous Air Pollutants*.

[14] ANSI-N13.1-1969, *Guide to Sampling Airborne Radioactive Materials in Nuclear Facilities*, American National Standards Institute, New York.

[15] DOE/EH-0173T, *Environmental Regulatory Guide for Effluent Monitoring and Environmental Surveillance*. U.S. Department of Energy, Washington, D.C. January 1991.

[16] Regulatory Guide 1.23, Revision 1, U.S. Nuclear Regulatory Commission, Washington, DC, March 2007.

[17] ANSI/ANS-3.11-2005, *American National Standard for Determining Meteorological Information at Nuclear Facilities*, American National Standards Institute/American Nuclear Society, La Grange Park, Illinois.

[18] EPA-454/R-99-005, *Meteorological Monitoring Guidance for Regulatory Modeling Applications*, U.S. Environmental Protection Agency Guide, Office of Air Quality Planning and Standards, Research Triangle Park, North Carolina.

[19] Clean Air Act; Amended 1990. Signed by the President on November 15, 1990.

[20] WSRC-TR-2001-00375, *Radionuclide Releases During Normal Operations for Ventilated Tanks*. Westinghouse Savannah River Company, Aiken, South Carolina. August 14, 2002.

[21] Q-CLC-J-00052, *SWPF Radiological Air Emissions, Dispersion and Dose Assessment for Normal Operations of Ventilated Tanks and Vessels*, Revision 0. Parsons, Aiken, South Carolina.

[22] DOE O 420.1B, *Facility Safety*. U.S. Department of Energy, Washington, D.C.

[23] Resource Conservation and Recovery Act (RCRA). Pub. L. No 94-580 42 USC §6901 et seq., as amended. 1976.

[24] *Hydrogeologic Framework of West Central South Carolina*, Report 5. Authors: Aadland, R.K., et al. South Carolina Department of Natural Resources, Water Resources Division, 1995.

[25] S-CLC-J-00084, *Radiological Consequences of a Seismic Event at SWPF*, Revision 1. Parsons, Aiken, South Carolina.

[26] DOE G 420.1-1, *Nonreactor Nuclear Safety Design Criteria and Explosive Safety Criteria Guide for use with DOE O 420.1, Facility Safety*. U.S. Department of Energy, Washington, D.C.

[27] DOE-STD-3009-94, Change Notice No. 3, *Preparation Guide for U.S. Department of Energy Nonreactor Nuclear Facility Documented Safety Analyses*. U.S. Department of Energy, Washington, D.C.

[28] DOE-STD-1021-93, Change Notice No. 1, *Natural Phenomena Hazards Performance Categorization Guidelines for Structures, Systems, and Components*. U.S. Department of Energy, Washington, D.C.

[29] DOE G 420.1-2, *Guide for the Mitigation of Natural Phenomena Hazards for DOE Nuclear Facilities and Non-Nuclear Facilities*. U.S. Department of Energy, Washington, D.C.

[30] Executive Order 12699, *Seismic Safety of Federal and Federally Assisted or Regulated New Building Construction*. The President. January 5, 1990.

[31] FEMA Publications 302 and 303, *Recommended Provisions for Seismic Regulations for New Buildings*, 1997 Edition, 2 volumes and maps. Federal Emergency Management Agency, Washington, D.C. 1997.

[32] IBC-2003, *International Building Code*. International Code Council, Falls Church, Virginia..

[33] DOE-STD-1020-2002, *Natural Phenomena Hazards Design and Evaluation Criteria for Department of Energy Facilities*. U.S. Department of Energy, Washington, D.C.

[34] IBC-2000, *International Building Code*. International Code Council, Falls Church, Virginia..

[35] "SRS 2,500 Year Scaled Deaggregation Spectra (Site2)", Subject: Contract No. DE-AC09-02SR22210, Salt Waste Processing Facility (SWPF) Project. Letter from Spears, T. (DOE) to C.H. Terhune (Parsons). Dated May 16, 2006.

[36] P-ESR-J-00002, *SWPF Structural Acceptance Criteria*. Parsons, Aiken, South Carolina.

[37] ASCE 7-02, *Minimum Design Loads for Buildings and Other Structures*. American Society of Civil Engineers, Reston, Virginia..

[38] Hydrometeorological Report No. 51, *Probable Maximum Precipitation Estimates, United States East of the 105$^{th}$ Meridian*. Authors: Schreiner, L.C. and J.T. Riedel. National Oceanic and Atmospheric Administration. U.S. Department of Commerce, Washington, D.C. 1978.

[39] Hydrometeorological Report No. 52, *Application of Probable Maximum Precipitation Estimates – United States East of the 105$^{th}$ Meridian*. Authors: Hansen, E.M, L.C.

Schreiner, and J.F. Miller. National Oceanic and Atmospheric Administration. U.S. Department of Commerce, Washington, D.C. 1982.

[40] NUREG 1.59, *Design Basis Floods for Nuclear Power Plants*. U.S. Nuclear Regulatory Commission, Washington, D.C. 1977.

[41] *Alvin W. Vogtle Electric Generating Plant, Unit 1 and Unit 2, Final Safety Analysis Report*, Vol. 1-34. Georgia Power Company. 1987.

[42] C-CLC-J-00030, *SWPF Design Basis Flood Hydrology*, Revision 0. Parsons, Aiken, South Carolina.

[43] WSRC-RP-89-715, *Safety Analysis: Evaluation of Accident Risks in the Transportation of Hazardous Materials by Truck and Rail at the Savannah River Plant*, (Internal Report), Revision 1. Westinghouse Savannah River Company, Aiken, South Carolina..

[44] SRNS-SA-2008-00004, *Transportation Safety Document*. Savannah River Nuclear Solutions, Aiken, South Carolina.

[45] Site Manual 1S, *Waste Acceptance Criteria Manual*, Revision 3. Savannah River Site, Aiken, South Carolina.

[46] DOE/EIS-0082-S2, *Savannah River Site Salt Processing Alternatives Final Supplemental Environmental Impact Statement*. U.S. Department of Energy, Savannah River Operations Office, Aiken, South Carolina. June 2001.

[47] National Environmental Policy Act (NEPA) of 1969, Pub. L. 91-190, 42 USC§4321 et seq., as amended.

[48] *Record of Decision: Savannah River Site Salt Processing Alternatives*. U.S. Department of Energy, Washington, D.C. Published in the Federal Register: October 17, 2001 (Volume 66, Number 201).

[49] S-EIP-J-00001, *SWPF Environmental Plan*. Parsons, Aiken, South Carolina.

[50] V-ESR-J-00019, *SWPF Permitting and Monitoring Requirements Interface Control Document (ICD-19)*. Parsons, Aiken, South Carolina.

# SWPF DOCUMENTED SAFETY ANALYSIS

# CHAPTER 2.0
# FACILITY DESCRIPTION

This page intentionally left blank.

# TABLE OF CONTENTS

2.0 FACILITY DESCRIPTION ..... 2.1-1

2.1 Introduction ..... 2.1-1
2.2 Requirements ..... 2.2-1
2.3 Facility Overview ..... 2.3-1
2.3.1 Facility Use ..... 2.3-1
2.3.2 Facility Configuration ..... 2.3-2
2.3.3 Basic Facility Processes ..... 2.3-2
2.4 Facility Structures ..... 2.4-1
2.4.1 SWPF Process and AFF Buildings ..... 2.4-1
2.4.1.1 WTE ..... 2.4-4
2.4.1.2 Process Vessel Cells ..... 2.4-5
2.4.1.3 North ASP P&VG ..... 2.4-19
2.4.1.4 South ASP P&VG ..... 2.4-20
2.4.1.5 Sample P&VG ..... 2.4-20
2.4.1.6 CSSX Area ..... 2.4-21
2.4.1.7 CFF Remote Removal ..... 2.4-29
2.4.1.8 Operating Deck ..... 2.4-30
2.4.1.9 Maintenance and Storage Areas ..... 2.4-31
2.4.1.10 Control Room ..... 2.4-31
2.4.1.11 SSP Room ..... 2.4-33
2.4.1.12 Analytical Laboratory ..... 2.4-34
2.4.1.13 Truck Bay ..... 2.4-35
2.4.1.14 Exhaust Stack ..... 2.4-35
2.4.1.15 Process Building Access and Egress ..... 2.4-35
2.4.2 AFF Building ..... 2.4-36
2.4.2.1 AFF Process Area Dikes ..... 2.4-36
2.4.2.2 AFF Access and Egress ..... 2.4-42
2.4.3 Inter-Facility Process Transfer Lines ..... 2.4-42
2.4.4 CCA ..... 2.4-43
2.4.5 Diesel Generator Building ..... 2.4-43
2.4.6 Compressor Building ..... 2.4-44
2.4.7 Transformer Pad ..... 2.4-44
2.4.8 13.8-kV Disconnect Switch Pad ..... 2.4-44
2.4.9 Chiller Pad ..... 2.4-44
2.4.10 Administration Building ..... 2.4-45
2.4.11 Other Structures ..... 2.4-45
2.4.11.1 Detention Basins, Storm Sewers, and Outfalls ..... 2.4-45
2.4.11.2 Personnel and Vehicle Control ..... 2.4-45
2.5 Process Description ..... 2.5-1
2.5.1 Overview ..... 2.5-1
2.5.2 Alpha Sorption ..... 2.5-2

TABLE OF CONTENTS (cont.)

2.5.2.1 Salt Waste Feed Receipt ..... 2.5-2
2.5.2.2 Salt Waste Feed Adjustment ..... 2.5-3
2.5.2.3 Actinide and $^{90}$Sr Sorption ..... 2.5-3
2.5.2.4 Filtration ..... 2.5-4
2.5.2.5 CSS Storage ..... 2.5-5
2.5.2.6 Sludge Washing ..... 2.5-6
2.5.2.7 Sludge Storage ..... 2.5-6
2.5.2.8 CFF Cleaning ..... 2.5-6
2.5.3 CSSX ..... 2.5-7
2.5.3.1 $^{137}$Cs Extraction ..... 2.5-7
2.5.3.2 Solvent Scrubbing ..... 2.5-9
2.5.3.3 $^{137}$Cs Stripping ..... 2.5-9
2.5.3.4 Caustic Washing ..... 2.5-10
2.5.3.5 Contactor Operation ..... 2.5-10
2.5.3.6 CSSX Shutdown/Startup ..... 2.5-10
2.5.3.7 Solvent Recovery and Recycle ..... 2.5-11
2.5.3.8 DSS Storage ..... 2.5-12
2.5.3.9 Strip Effluent Storage ..... 2.5-12
2.5.4 AFP ..... 2.5-12
2.5.4.1 Receipt and Storage of DSS ..... 2.5-13
2.5.4.2 Actinide and $^{90}$Sr Sorption in AST-B (TK-221) ..... 2.5-13
2.5.4.3 Transfer MST/Slurry to FFT-B (TK-222) ..... 2.5-13
2.5.4.4 Filter Cleaning ..... 2.5-13
2.5.5 Product Transfers from SWPF ..... 2.5-14
2.6 Confinement Systems ..... 2.6-1
2.7 Safety Support Systems ..... 2.7-1
2.7.1 Fire Detection and Suppression Systems ..... 2.7-1
2.7.2 Monitoring Systems ..... 2.7-1
2.7.2.1 General Instrument Design ..... 2.7-1
2.7.2.2 Process Leak Detection and Isolation ..... 2.7-2
2.7.2.3 CSS Turbidity/Opacity ..... 2.7-2
2.7.2.4 DSS Gamma Activity ..... 2.7-2
2.7.2.5 Airborne Particulate Monitoring (in Ventilation Systems) ..... 2.7-3
2.7.2.6 Area Radiation Monitoring ..... 2.7-3
2.7.2.7 Hazardous Chemical Emissions ..... 2.7-3
2.7.3 Industrial Safety ..... 2.7-3
2.7.3.1 Safety Showers and Eyewash Stations ..... 2.7-3
2.7.4 Process Safety ..... 2.7-4
2.7.4.1 PVVS ..... 2.7-4
2.7.4.2 Air Dilution System ..... 2.7-5
2.7.4.3 APAs ..... 2.7-5
2.7.4.4 Alarms and Interlocks ..... 2.7-6

TABLE OF CONTENTS (cont.)

2.7.4.5 Facility Communication Systems ..... 2.7-6
2.8 Utility Distribution Systems ..... 2.8-1
2.8.1 Electrical ..... 2.8-1
2.8.1.1 Grounding and Lightning Protection System ..... 2.8-4
2.8.2 Plant Air and Instrument Air ..... 2.8-4
2.8.3 Water Systems ..... 2.8-5
2.8.3.1 DWS ..... 2.8-5
2.8.3.2 Process Building Flush Water System ..... 2.8-5
2.8.3.3 DI Water System ..... 2.8-6
2.8.3.4 PW System ..... 2.8-6
2.8.3.5 PCWS ..... 2.8-6
2.8.3.6 Chilled Water Systems ..... 2.8-7
2.8.3.7 Tempered Water Units ..... 2.8-7
2.8.3.8 Pump Seal Flush Water Supply ..... 2.8-7
2.9 Auxiliary Systems and Support Facilities ..... 2.9-1
2.9.1 HVAC Systems ..... 2.9-1
2.9.1.1 Ventilation Systems in the Process Building ..... 2.9-1
2.9.1.2 AFF HVAC System ..... 2.9-8
2.9.1.3 AFF Vent Header ..... 2.9-8
2.9.1.4 CCA HVAC System ..... 2.9-9
2.9.1.5 HEPA Testing ..... 2.9-9
2.9.2 Cold Chemicals ..... 2.9-9
2.9.2.1 Caustic System ..... 2.9-9
2.9.2.2 Nitric Acid System ..... 2.9-11
2.9.2.3 Filter Cleaning Acid ..... 2.9-11
2.9.2.4 Solvent Makeup System ..... 2.9-12
2.9.2.5 MST Receipt, Storage, and Transfer ..... 2.9-12
2.10 Figures ..... 2.10-1
2.11 References ..... 2.11-1

**List of Figures**

Figure 2-1. LW Disposition Baseline ..... 2.10-1
Figure 2-2. Simplified Process Flow Diagram ..... 2.10-2
Figure 2-3. SWPF Facility Structures ..... 2.10-3
Figure 2-4. Process Building, AFF, and Support Areas Layout ..... 2.10-4
Figure 2-5. Process Building and AFF Structural Overview ..... 2.10-5
Figure 2-6. Cross-flow Filter Tube Removal ..... 2.10-6
Figure 2-7. Process Vessel AST-A (TK-101) External Components ..... 2.10-7
Figure 2-8. Process Vessel AST-A (TK-101) Internal Components ..... 2.10-8
Figure 2-9. Process Vessel FFT-A (TK-102) External Components ..... 2.10-9
Figure 2-10. Process Vessel FFT-A (TK-102) Internal Components ..... 2.10-10

**TABLE OF CONTENTS (cont.)**

**Figure 2-11. Process Vessel SSRT (TK-104) External Components ..... 2.10-11**
**Figure 2-12. Process Vessel SSRT (TK-104) Internal Components ..... 2.10-12**
**Figure 2-13. Process Vessel WWHT (TK-105) External Components ..... 2.10-13**
**Figure 2-14. Process Vessel WWHT (TK-105) Internal Components ..... 2.10-14**
**Figure 2-15. Process Vessel SSFT (TK-109) External Components..... 2.10-15**
**Figure 2-16. Process Vessel SSFT (TK-109) Internal Components ..... 2.10-16**
**Figure 2-17. Process Vessel SEHT (TK-205) External Components ..... 2.10-17**
**Figure 2-18. Process Vessel SEHT (TK-205) Internal Components ..... 2.10-18**
**Figure 2-19. Cutaway View of Annular Centrifugal Contactor ..... 2.10-19**
**Figure 2-20. Process Vessel IST (TK-220) External Components..... 2.10-20**
**Figure 2-21. Process Vessel IST (TK-220) Internal Components..... 2.10-21**
**Figure 2-22. Process Vessel AST-B (TK-221) External Components ..... 2.10-22**
**Figure 2-23. Process Vessel AST-B (TK-221) Internal Components ..... 2.10-23**
**Figure 2-24. Process Vessel FFT-B (TK-222) External Components..... 2.10-24**
**Figure 2-25. Process Vessel FFT-B (TK-222) Internal Components ..... 2.10-25**
**Figure 2-26. Process Vessel DSSHT (TK-207) External Components ..... 2.10-26**
**Figure 2-27. Process Vessel DSSHT (TK-207) Internal Components..... 2.10-27**
**Figure 2-28. Typical Air Pulse Agitator..... 2.10-28**
**Figure 2-29. Strip Contactors Tempered Water System..... 2.10-29**
**Figure 2-30. Solvent Strip Feed Tempered Water System..... 2.10-29**

## LIST OF ACRONYMS AND ABBREVIATIONS

| | |
|---|---|
| % | Percent |
| °F | Degrees Fahrenheit |
| ADS | Air Dilution System |
| AFDT | Alpha Finishing Drain Tank (TK-228) |
| AFF | Alpha Finishing Facility |
| AFP | Alpha Finishing Process |
| AHU | Air Handling Unit |
| ANSI | American National Standards Institute |
| APA | Air Pulse Agitator |
| ARM | Area Radiation Monitor |
| ASDT | Alpha Sorption Drain Tank (TK-601) |
| ASME | American Society of Mechanical Engineers |
| ASP | Alpha Strike Process |
| AST-A | Alpha Sorption Tank-A (TK-101) |
| AST-B | Alpha Sorption Tank-B (TK-221) |
| ATS | Automatic Transfer Switch |
| Ba | Barium |
| BDT | Barium-137 Decay Tank (TK-206) |
| BOBCalixC6 | Calix[4]arene-bis(tert-octylbenzo-crown-6) |
| BPCS | Basic Process Control System |
| CAM | Continuous Air Monitor |
| CCA | Cold Chemicals Area |
| CCTV | Closed-circuit Television |
| CFF | Cross-flow Filter |
| CFR | Code of Federal Regulations |
| CHU | Chiller Unit |
| CLFL | Composite Lower Flammability Limit |
| CPA | Central Process Area |
| CR | Control Room |
| Cs | Cesium |
| CSDT-A | Cleaning Solution Dump Tank-A (TK-103) |
| CSDT-B | Cleaning Solution Dump Tank-B (TK-223) |
| CSS | Clarified Salt Solution |
| CSSX | Caustic-Side Solvent Extraction |
| D&D | Decommissioning and Decontamination |
| DC | Direct Current |
| DCS | Distributed Control System |
| DI | De-ionized |
| DOE | U.S. Department of Energy |
| dP | Differential Pressure |
| DSS | Decontaminated salt solution |
| DSSHT | Decontaminated Salt Solution Hold Tank (TK-207) |
| DWPF | Defense Waste Processing Facility |

## LIST OF ACRONYMS AND ABBREVIATIONS (cont.)

| | |
|---|---|
| DWS | Domestic Water System |
| EDO | Emergency Duty Officer |
| EEO | Emergency Exit Only |
| EPC | Engineering, Procurement, and Construction (Contractor) |
| ESEWS | Emergency Shower/Eyewash Station |
| FFT-A | Filter Feed Tank-A (TK-102) |
| FFT-B | Filter Feed Tank-B (TK-222) |
| FSA | Facility Support Area |
| ft | feet/foot |
| FTF | F-Area Tank Farm |
| FVRBE | Filter Vent Relief and Blowdown Enclosure |
| g/L | Grams per liter |
| gpm | Gallons per minute |
| $H_2$ | Hydrogen |
| $H_2C_2O_4$ | Oxalic Acid |
| HAZMAT | Hazardous Material |
| HEPA | High-efficiency Particulate Air |
| $HNO_3$ | Nitric Acid |
| HP | Health Physics |
| HTF | H-Area Tank Farm |
| HVAC | Heating, Ventilating, and Air Conditioning |
| I&C | Instrumentation and Controls |
| IBC | International Building Code |
| ICD | Interface Control Document |
| IEEE | Institute of Electrical and Electronics Engineers |
| ISA | Instrumentation, Systems, and Automation Society |
| IST | Intermediate Storage Tank (TK-220) |
| IT | Information Technology |
| K | Potassium |
| kV | kilovolt |
| LAN | Local Area Network |
| LLW | Low-level Waste |
| LPPP | Low Point Pump Pit |
| LW | Liquid Waste |
| M | Molar |
| MCC | Motor Control Center |
| Mgal | Million gallons |
| MST | Monosodium Titanate |
| MSTT | MST/Sludge Transfer Tank (TK-224) |
| Na | Sodium |
| Na+ | Sodium ion |
| NaOH | Sodium Hydroxide (Caustic) |
| NFPA | National Fire Protection Association |

## LIST OF ACRONYMS AND ABBREVIATIONS (cont.)

| | |
|---|---|
| NPH | Natural Phenomena Hazard |
| NPSH | Net Positive Suction Head |
| pH | Measure of alkalinity and acidity or hydrogen ion concentration |
| P&VG | Pump and Valve Gallery |
| PBVS | Process Building Ventilation System |
| PC | Performance Category |
| PCWS | Process Chilled Water System |
| PMVS | Pulse Mixer Ventilation System |
| PPT | Precipitate Pump Tank |
| PVV | Process Vessel Vent |
| PVVS | Process Vessel Ventilation System |
| PW | Process Water |
| ROV | Remotely-Operated Valve |
| SAST | Spent Acid Storage Tank (TK-127) |
| scfm | Standard cubic feet per minute |
| SDG | Standby Diesel Generator |
| SEHT | Strip Effluent Hold Tank (TK-205) |
| SHT | Solvent Hold Tank (TK-202) |
| SIF | Safety Instrumented Functions |
| SIS | Safety Instrumented System |
| SPF | Saltstone Production Facility |
| Sr | Strontium |
| SRR | Savannah River Remediation, LLC |
| SRS | Savannah River Site |
| SRSOC | SRS Operations Center |
| SS | Safety Significant |
| SSC | Structure, System, and Component |
| SSFT | Salt Solution Feed Tank (TK-109) |
| SSP | Safe Shutdown Panel |
| SSRT | Sludge Solids Receipt Tank (TK-104) |
| SWPF | Salt Waste Processing Facility |
| TCV | Temperature Control Valve |
| TIC | Temperature Indication Controller |
| TOA | Tri-n-octylamine |
| UPS | Uninterruptible Power Supply |
| VAC | Volts Alternating Current |
| VFD | Variable-Frequency Drive |
| VHF | Very High Frequency |
| VOC | Volatile organic compound |
| WAC | Waste Acceptance Criteria |
| wt% | weight percent |
| WTE | Waste Transfer Enclosure |
| WWHT | Wash Water Hold Tank (TK-105) |

This page intentionally left blank.

# 2.0 FACILITY DESCRIPTION

## 2.1 Introduction

This chapter describes the Salt Waste Processing Facility (SWPF), located in J-Area at Savannah River Site (SRS), in sufficient detail to understand how the structures, systems, and components (SSCs) function and how they support the Safety Basis requirements of 10 Code of Federal Regulations (CFR) 830, *Nuclear Safety Management*[1]. The scope of this chapter includes the SWPF Process Building (221-J), the Alpha Finishing Facility (AFF) (221-3J), and other SWPF support buildings and structures.

Descriptions of the facility and processes provided in this chapter support assumptions used in the hazard and accident analyses. These descriptions focus on all major facility features necessary to understand the hazard analysis and accident analysis, not just safety SSCs. Based on a graded approach, this chapter includes:

- Overview of the facility and its inputs and outputs, including mission and history;
- Description of the facility structure and design basis;
- Description of the facility process systems and constituent components, instrumentation, controls, operating parameters, and relationships of SSCs;
- Description of confinement systems;
- Description of the facility safety support systems;
- Description of the facility utilities; and
- Description of facility auxiliary systems and support systems.

Facility layouts, dimensions, materials, sketches, and other information provided in this chapter are intended to support an overall understanding of the facility structure and the general arrangement of the facility as it pertains to hazard and accident analyses. This chapter is not intended to define safety-related SSCs; these SSCs are identified in Chapter 4.0.

Sketches are not to scale and were developed from piping and instrumentation diagrams, detail drawings, equipment arrangement drawings, and other drawings. It should be noted that all dimensions and parameter values (e.g., pump flow rates, tank volumes, etc.) shown in this chapter are “nominal” or “reference” values and are provided for information only. It should not be inferred that any of the values shown in this chapter must be protected as part of the safety basis for SWPF. Any values that are part of the safety basis are defined in Chapters 3.0, 4.0, 5.0, and 6.0.

Process values such as flow rates, volumes, and concentrations stated in this chapter represent values from the process flow sheets for the SWPF process. However, the values stated in this chapter are typical of the base process case only. It should not be inferred that the use of these values in this chapter restricts the actual operation of the process in accordance with these values. Operational flexibility is not restricted by the values in this chapter. Process values defined in

Chapters 3.0, 4.0, 5.0, and 6.0 may place restrictions on the process operations of the SWPF. Where this is true, the fact is clearly defined in Chapters 3.0, 4.0, 5.0, or 6.0.

## 2.2 Requirements

Federal regulations, U.S. Department of Energy (DOE) directives and standards, and SWPF documents applicable to developing this chapter of the SWPF Documented Safety Analysis, as part of the facility Safety Basis, include the following:

- 10 CFR 830[1];
- DOE O 420.1B, *Facility Safety*[2] (design activities);
- DOE O 420.1C, *Facility Safety*[3] (operational activities);,
- 00-700-24032, *DOE Order 420.1B/C Change. 1 Composite Requirements*[4];
- DOE-STD-3009-94, Change Notice No. 3, *Preparation Guide for U.S. Department of Energy Nonreactor Nuclear Facility Documented Safety Analyses*[5];
- S-RCP-J-00001, *SWPF Standards/Requirements Identification Document*[6];
- P-DB-J-00003, *SWPF Process Basis of Design*[7];
- P-DB-J-00004, *SWPF Balance of Plant Basis of Design*[8]; and
- P-SPC-J-00002, *SWPF Functional Specification*[9].

This page intentionally left blank.

## 2.3 Facility Overview

### 2.3.1 Facility Use

Nuclear material production operations at SRS resulted in the generation of radioactive liquid waste (LW) that was sent to the F- and H-Area Tank Farms (FTF and HTF) for storage. Over 150 million gallons (Mgal) of LW has been received into the underground waste storage tanks in FTF and HTF from 1954 to present. The volume of this waste has been reduced by the use of evaporators, resulting in the precipitation of salts.

Waste in the LW tanks is comprised of three forms:

1. Precipitated Sludge –primarily metal oxides containing approximately one-half the total curies of radioactive material within the LW tanks,
2. Saltcake –salt precipitate, and
3. Supernate –salt solution.

The bulk of the sludge is transferred directly from the Tank Farms to the Defense Waste Processing Facility (DWPF) for vitrification. Water will be added to dissolve the saltcake and wash the sludge that has been segregated for vitrification. The water added for waste removal, sludge washing, and the continued generation of LW by other SRS facilities will increase the total volume of salt solution to be processed to approximately 96 Mgal. Some fraction of the salt solutions relatively low in curie content were processed by Deliquification, Dissolution, and Adjustment, the Actinide Removal Process, and a modular Caustic-Side Solvent Extraction (CSSX) unit prior to SWPF startup. The majority of the salt solution removed from the Tank Farms will be processed through SWPF.

The SWPF feed constituent concentrations may vary on a batch-to-batch basis. Each SWPF feed batch is analyzed for chemical and radionuclide concentrations prior to delivery to the SWPF.

The SWPF mission is to pre-treat the salt waste to be removed from the LW tanks in the FTF and HTF. Pretreatment of the salt waste at the SWPF removes and concentrates the soluble, highly radioactive cesium-137 ($^{137}$Cs), strontium-90 ($^{90}$Sr), and selected actinides (i.e., elements with an atomic number between 89 and 103) from the bulk salt solution feed. The concentrated waste containing the $^{137}$Cs, $^{90}$Sr, and actinide constituents is sent to DWPF, where the waste will be immobilized in glass through a vitrification process. The bulk decontaminated salt solution (DSS) is ultimately sent to the Saltstone Production Facility (SPF) for immobilization in a grout mixture and disposal in grout vaults.

Figure 2-1 shows the waste receipt and treated waste streams associated with the SWPF. P-SPC-J-00001, *SWPF Feed Strategy and Product and Secondary Waste Specification*[10], provides additional details concerning the planned receipt and processing of salt waste in the SWPF.

### 2.3.2 Facility Configuration

SWPF operations require physical and process interfaces with DWPF, HTF, and SPF. The process interface boundaries with these SRS facilities are discussed below.

- DWPF Interface – The inter-area transfer lines and waste transfer facilities between DWPF and the SWPF Waste Transfer Enclosure (WTE), including the Low Point Pump Pit (LPPP) Building (511-S). SWPF operational responsibility ends at the seal plate outside the SWPF WTE.
- HTF Interface – The inter-area transfer lines and waste transfer facilities between HTF and the SWPF WTE, including the LPPP. SWPF operational responsibility ends at the seal plate outside the SWPF WTE.
- SPF Interface – The DSS inter-area transfer line from SWPF to the intersection with the DSS transfer line between HTF and SPF. SWPF operational responsibility ends at the seal plate outside the DSS Hold Tank (DSSHT) (TK-207)/Filter Feed Tank-B (FFT-B) (TK-222) area of the AFF.

V-ESR-J-00010, *SWPF Waste Transfer Interface Control Document [ICD-10]*[11], describes these interfaces in more detail.

The SWPF relies on SRS and adjacent SRS facilities to provide electrical power, domestic water, fire suppression water, and disposal of solid waste, mixed waste, low-level radioactive waste, and sanitary sewage. The SWPF also obtains emergency response services (i.e., fire, medical, and hazardous material [HAZMAT]) from the Site, and participates in the SRS Emergency Response program. Access to these utilities and services is established through Interface Control Documents (ICDs) executed among the SWPF Engineering, Procurement, and Construction (EPC) Contractor, Savannah River Remediation, LLC (SRR), and DOE-Savannah River.

### 2.3.3 Basic Facility Processes

The basic processes performed in the SWPF are summarized below. Figure 2-2 schematically shows the systems referenced in the summaries. Subchapter 2.5 of this chapter contains detailed process information.

- Actinide Removal and Concentration within the Alpha Strike Process (ASP):
  - The ASP receives salt waste from HTF as batch transfers into Alpha Sorption Tank-A (AST-A) (TK-101). In addition to soluble actinides, $^{90}$Sr, and $^{137}$Cs, the salt waste also contains small quantities of suspended Tank Farm solids that include insoluble actinide and $^{90}$Sr oxides;
  - In AST-A (TK-101), the chemistry of the salt waste is adjusted, monosodium titanate (MST) is added, and the combination is agitated. Soluble actinides and $^{90}$Sr are sorbed onto MST over a 6- or 12-hour strike period;

  - The AST-A (TK-101) contents are then transferred to Filter Feed Tank-A (FFT-A) (TK-102), where they are concentrated by filtration to produce sludge containing MST and Tank Farm solids and a filtrate (clarified salt solution [CSS]), predominantly containing $^{137}Cs$;
  - The MST/sludge is transferred to the Sludge Solids Receipt Tank (SSRT) (TK-104), where it is washed with process water (PW) to reduce sodium (Na) cation concentrations;
  - Batch transfers of washed MST/sludge are made to the DWPF from the SSRT (TK-104); and
  - CSS accumulates in the Salt Solution Feed Tank (SSFT) (TK-109) that feeds the CSSX process.
- Cs Extraction and Concentration within the CSSX process:
  - CSS and an organic extraction solvent containing a Cs-specific extractant (i.e., a crown ether, Calix[4]arene-bis(tert-octylbenzo-crown-6) [BOBCalixC6]) in a hydrocarbon solvent (Isopar®L) are pumped through a series of counter-current-flow centrifugal Extraction Contactors (EXT-201A-P), where the $^{137}Cs$ is transferred from the aqueous CSS to the extractant;
  - The Cs-depleted aqueous stream from EXT-201 is sent to the AFF, where it is held for batch transfer to a downstream facility, or sent through the Alpha Finishing Process (AFP), should an additional MST strike be required to meet the downstream facility waste acceptance criteria (WAC);
  - The Cs-laden solvent is then pumped through a series of counter-current-flow centrifugal stripping contactors (EXT-203A-P), where the $^{137}Cs$ is transferred from the extractant to a dilute aqueous nitric acid ($HNO_3$) solution; and
  - The Cs-laden acidic solution (i.e., strip effluent) accumulates in the Strip Effluent Hold Tank (SEHT) (TK-205), from which batch transfers are made to DWPF;
- Actinide Removal and Concentration within the AFP:
  - $^{137}Cs$-depleted CSS that requires additional actinide removal treatment using MST is received in the Intermediate Storage Tank (IST) (TK-220) and is subsequently transferred to Alpha Sorption Tank-B (AST-B) (TK-221);
  - In AST-B (TK-221), MST is added and the combination is agitated for the required strike time. Soluble actinides and $^{90}Sr$ are sorbed onto MST;
  - The AST-B (TK-221) contents are then transferred to FFT-B (TK-222), where they are concentrated by filtration to produce MST/sludge and DSS with further reduced concentrations of actinides and $^{90}Sr$;
  - The DSS is held in the DSSHT (TK-207) for batch transfer to a downstream facility; and

- The concentrated MST/sludge is transferred to the MST/Sludge Transfer Tank (MSTT) (TK-224). Depending on the degree of actinide saturation and operational considerations, the MST/sludge from the AFF is either returned to the ASP for reuse with fresh salt waste or added to the MST/sludge in SSRT (TK-104) from the ASP, for washing and batch transfer to the DWPF.

## 2.4 Facility Structures

The main SWPF structures in J-Area are the Administration Building (704-J), Compressor Building (221-4J), Chiller Pad (285-J), Diesel Generator Building (254-J), Process Building (221-J), and AFF (221-3J). These structures are shown in Figure 2-3.

### 2.4.1 SWPF Process and AFF Buildings

The Process Building is functionally divided into four areas: the Central Processing Area (CPA), Cold Chemicals Area (CCA), Northern and Eastern Facility Support Areas (FSAs), and the AFF. These areas are shown in Figure 2-4. Systems used to treat radioactive waste and primary support systems are located in the CPA and AFF. Personnel work spaces and secondary support systems are primarily housed in the FSAs and CCA.

The reinforced concrete construction of the CPA basemat, floors, walls, and ceilings meets Performance Category (PC) -3 structural requirements to withstand natural phenomena hazards (NPHs). This design also shields workers and the environment from direct radiation exposure and minimizes the release of HAZMAT to the environment if the primary confinement, provided by process tanks, piping, and equipment, fails.

The FSAs, CCA, and AFF are constructed with fabricated roofing (i.e., thermoplastic roof membrane over rigid insulation adhered to metal decking) and siding supported by structural steel on shallow foundations. The roofing and siding meet PC-1 structural requirements. The foundations and superstructures for the FSAs, CCA, and AFF are structurally decoupled from the CPA. The steel structural members of the FSAs, CCA, and AFF are supported to PC-3 seismic standards to prevent failure of the structures damaging the CPA. A structural overview of the Process Building and AFF is shown in Figure 2-5.

Five Process Vessel Cells are located at the 100-foot (ft) elevation (Note: 100-ft elevation is equal to 281 ft above sea level) approximately 1 ft above the adjacent finish grade; one Process Vessel Cell (Alpha Sorption Drain Tank [ASDT] Cell) is located at the 88’-6” elevation and is designed to receive waste from the process and sized to contain design basis spill events. The ASDT Cell also houses three of the four cross-flow filters (CFFs). The process tanks in these cells contain the LW being processed to separate soluble actinides and $^{90}$Sr and insoluble Tank Farm sludge from the salt waste, using MST addition and filtration in the ASP. These cells also contain the product feed and receipt tanks to/from the CSSX process. Against the north wall of the Process Vessel Cells from west to east is the Control Room (CR), Information Technology (IT)/Server/Uninterruptible Power Supply (UPS) Room/Shift Supervisor’s Office. On the east side of the shared wall is the North ASP Pump and Valve Gallery (P&VG). The interconnecting piping, isolation valves, and pumps for the ASP and MST/sludge transfers to DWPF are located in the North ASP P&VG at Elevation 100 ft, adjacent to the north walls of the Process Vessel Cells. Each labyrinth entry in a P&VG is provided with a locked entry way that meets Subpart F of 10 CFR 835, *Occupational Radiation Protection*[12], requirements.

The CSSX areas are on the south side of the Process Vessel Cells. This area is subdivided into three separate functional areas.

- The first functional area is one that extends for the full length of the south wall and contains two P&VGs. The CSSX P&VG, at the 100-ft elevation, contains the interconnecting piping, isolation valves, and pumps for the CSSX process and strip effluent transfers to DWPF. Immediately adjacent and extending in the east direction is the Sample Pump and Valve Labyrinth, which contains sample pumps that provide a sample waste stream to the samplers located in the Laboratory on the 139-ft elevation. Immediately adjacent and extending in the east direction is the South ASP P&VG, which contains the transfer pumps for the Wash Water Hold Tank (WWHT) (TK-105), Solvent Drain Tank (TK-208), Spent Acid Storage Tank (SAST) (TK-127), and ASDT (TK-601).
- The second functional area is a bi-level cell, located above the CSSX P&VG at the 116-ft and 124-ft elevations, and contains the CSSX centrifugal contactors.
- The third functional area includes the East and West CSSX Tank Cells, which are south of the CSSX P&VG at the 100-ft elevation and along the south wall of the CPA. These Tank Cells contain the CSSX process vessels and support equipment. A shield wall divides the East and West CSSX Tank Cells. Located in the East CSSX Tank Cell are the Solvent Strip Feed Tank (TK-217) and the Strip Effluent Pump Tank (TK-215), Strip Effluent Stilling Tank (TK-212), and Strip Effluent Coalescer (TK-203). Located in the West CSSX Tank Cell are Cesium-depleted CSS vessels and some CSSX vessels that contain solvent.

Located at the 100-ft elevation within the eastern end of the CPA, are the Controlled Entry Areas, Material Staging and Storage Area, Drum-off/ Decontamination Area, Contactor Rebuild Area, and Waste Storage Area.

Located at the 100-ft elevation within the western end of the CPA, from north to south are the Safe Shutdown Panel (SSP) Room, WTE (92-ft elevation), and Back-up Air Storage. These three rooms can only be accessed from outside the CPA via external doors on the west wall of the CPA. The WTE is accessed via the Waste Transfer Access Room (108-ft elevation).

The CCA is located at the southwest corner of the Process Building at the 100-ft elevation and houses tanks that receive, store, and mix cold chemicals used in SWPF process operations. A Cold Chemicals Laboratory is also located in the CCA.

The Northern FSA is located north of the CPA structure and is separated by an east-west corridor. From west to east, the Northern FSA includes: the Electrical Room that houses 480-volt alternating current (VAC) switchgear, motor control centers (MCCs), Instrument Panels, and some automatic transfer switches (ATSs). Adjacent to the Electrical Room on the southwest corner is a Fire Protection Valve Room that is accessed from a west wall facility entrance. On the east side of the Electrical Room is a Mechanical Room that houses Air Handling Units (AHUs) for the Process Building Ventilation System (PBVS) and CR Ventilation System, Chilled Water Pumps, and Heat Recovery Pumps. Adjacent to the Mechanical Room are the Break Room, Toilet/Locker Rooms, Janitorial Closet, and Clean Personal Protective Equipment Storage.

The Eastern FSA adjoins the Northern FSA and the CPA. This area includes the main personnel entrance to the SWPF, a DOE Office, five other offices, Work Release Office, a general storage room, Health Physics (HP) Offices, HP Ready Room, HP Count Area, Personnel Decon Room, General Maintenance Shop, Rad Tool Storage Room, Clean Tool Storage Room, spare parts storage, and a waste storage room. On the eastern-most end of the FSA is a Truck Bay that has a direct path into the CPA's Material Staging and Storage Area via the Equipment Corridor. The south end of the Eastern FSA includes an Equipment Corridor, various maintenance and calibration shops and offices, and the Fire Protection Valve Room.

The Exhaust Fan Room and the Process Building Exhaust Air High-Efficiency Particulate Air (HEPA) Filter Room are located above the CR and North ASP P&VG. A reinforced concrete Heating, Ventilating, and Air Conditioning (HVAC) chase shields the HVAC duct penetrations for the Process Vessel Cells. This shielding allows routine access to the filters and fans in the adjacent Exhaust Fan and HEPA Filter Rooms.

East of the Process Vessel Cells at the 116-ft elevation is a removable fire-rated concrete hatch cover that facilitates transfer of CFF elements and other large items/equipment between this level, or upper levels, and the 100-ft elevation. On the same elevation, a similar type of pass-through hatch is provided to lower CSSX contactor components from the 124-ft and 116–ft elevations to the South ASP P&VG Corridor on the 100-ft elevation.

Against the south wall of the Process Vessel Cells are two piping chases and the adjacent Contactor Operating Deck. The flooring above the contactor housings is a steel grating. The Contactor Operating Deck is not accessible during operations because it is a high-radiation area. The contactor shafts pass through the grating to the motors that are accessible for maintenance from this elevation. South of the Contactor Operating Deck and just above the CSSX Tank Cell is the CSSX Tank Cell Operating Deck. In the floor of this deck is a hatch that, when removed, provides access to the east CSSX Tank Cell. The West CSSX Tank Cell is accessible from the 100-ft level; it is essentially a labyrinth accessed via an airlock. The CSSX Tank Cell Operating Deck provides access to valve operators for draining and flushing contactors. The valves and contactor piping are located beneath the deck.

The Operating Deck above the Process Vessel Cells contains ports for personnel access to the Process Vessel Cells. The ports are for use during construction and commissioning of the facility and would allow access to the cells following an unforeseen equipment failure or for post-accident recovery. Draining and extensive flushing of the equipment contained in the cells would precede personnel entry. The access ports also facilitate Decontamination and Decommissioning (D&D) activities. The Cell Inlet Air HEPA Filter Room #1 and Process Vessel Ventilation System/Pulse Mixer Ventilation System (PVVS/PMVS) and Laboratory HEPA Filter Room are also located at the 139-ft elevation on the north side of the CPA. The Analytical Laboratory is located on the 139-ft elevation against the south wall of the CPA. From west to east, it is comprised of the Hot Laboratory, Radiochemistry Laboratory, Inorganic Laboratory, Organic Laboratory, as well as a laboratory count room, storage areas, and Laboratory Office area. Within the Hot Laboratory are four Hot Cells, within one common shielded enclosure, containing a bridge crane and manipulators. On the south side of the Hot Laboratory are

Manipulator Decon and Repair rooms to perform maintenance on manipulators used in the Hot Cells. Within the Radiochemistry Laboratory are nine gloveboxes, one of which can transfer items to/from the Hot Cells and six radio hoods. Within the Inorganic Laboratory are two gloveboxes and five radio hoods. Within the Organic Laboratory are six radio hoods. A sample transfer system is provided within another glovebox to transfer samples between laboratories. Routine Hot Cell maintenance is planned to be performed remotely to the extent practical, with a means for Hot Cell entry after draining, flushing, and decontaminating the equipment in the Hot Cells to allow for maintenance of items such as the Hot Cell bridge crane. Entry is accomplished through the Hot Cell large pass-through, which is a controlled entry way that meets Subpart F of 10 CFR 835[12], requirements. On the west end of the CPA above the utility chase is the Laboratory Hot Cell Exhaust Room, which contains the scrubbers and HEPA filters for the Hot Cell and glovebox exhaust system.

A bridge crane that services the Operating Deck is used for installing and removing large, replaceable process components (e.g., CFF tube bundles), moving component handling equipment (e.g., shipping/disposal containers for failed contaminated components), and removal and replacement of the shield plugs and hatch covers for the Process Vessel Cells and Alpha Sorption Filter drop area. A Crane Maintenance platform is provided at the east end of the Operating Deck above elevation 139 ft. An equipment lift services the 100-, 116-, and 139-ft, elevations of the CPA.

#### 2.4.1.1 WTE

The waste feed, MST/sludge, and strip effluent waste transfer lines are routed into or out of the SWPF Process Building through the WTE. This PC-3 reinforced concrete enclosure is partially below grade to allow underground waste transfer lines to penetrate the west wall of the WTE. The waste transfer lines pass through a reinforced concrete vault external to the WTE that allows for settlement of the CPA without damaging the pipe or jacket.

The LW feed transfer path from HTF passes through the LPPP (Building 511-S), WTE, SSFT, and SEHT Cells, and terminates in AST-A (TK-101). A 3-inch stainless steel underground transfer line in a jacket pipe runs between the LPPP and WTE. Inside the WTE, the transfer line is equipped with two remotely operated valves (ROVs) in series for flow path isolation.

A 3-inch transfer line from the SSRT (TK-104) delivers MST/sludge through the WTE to a pump tank in the LPPP, from which it is pumped to the DWPF. This line exits the WTE inside the same jacket as the incoming waste feed to AST-A (TK-101). An isolation valve is also installed in this line in the WTE.

A 3-inch stainless steel transfer line carries the highly concentrated $^{137}Cs$ product (i.e., strip effluent) from the SEHT (TK-205) through the WTE. Valves are also installed in this line in the WTE to isolate flow when appropriate as well as support flushing and venting of the line. Within the WTE, this line enters a different jacket pipe (with a seal plate just outside the WTE) to direct waste through the LPPP to the DWPF.

The jacket containing the strip effluent transfer line also contains a second 3-inch stainless steel transfer line, which is considered a spare. The spare line is capped within the WTE, and is also capped underground near the LPPP.

The seal plates on the transfer line jackets serve as the operational interface boundary. The seal plates are located at a high point of the jacket, just outside the WTE. The transfer line jackets are made from stainless steel pipe between SWPF and the seal plate, and are made of carbon steel pipe between the seal plate and the LPPP. The transfer line jackets are open to the WTE, allowing any transfer line leakage on the SWPF side of the seal plate to be collected in the WTE sump. Any transfer line leakage on the LPPP side of the seal plate will drain to leak detection devices associated with the LPPP. The valve internals are accessible through the WTE Access Room and replaceable through a sleeved arrangement.

The sump is equipped with a leak detection instrument to alert Operators to leakage within the WTE. The WTE sump is emptied by using a sump pump located in the North ASP P&VG. The sump waste can be pumped to the laboratory for sampling and can be diverted to other locations such as a drum-off station, ASDT (TK-601), or SSRT (TK-104). Equipment in the WTE that requires maintenance is designed for external removal and replacement. A 3-inch vent is provided to the adjacent SSFT Cell. The vent maintains the WTE pressure negative with respect to the WTE Access Room and provides a diffusion pathway for hydrogen ($H_2$) out of the enclosure.

Although personnel entry into the WTE is not anticipated during the facility's operating lifetime, a manway into the WTE is provided for commissioning and D&D activities. The manway is closed by a shielded plug/access hatch that requires mechanical assistance for removal.

#### 2.4.1.2 Process Vessel Cells

The SWPF has six Process Vessel Cells (SSFT, SEHT, AST-A, FFT-A, ASDT, and SSRT/WWHT) containing waste processing tanks and piping. Each cell is constructed of reinforced concrete for NPH protection and gamma radiation shielding.

The floor and bottom portions of the walls in each Process Vessel Cell are provided with a stainless steel liner. Items considered in determining the heights of the cell liners included inventory of the largest process vessel within the cell and volume of the largest credible tank overflow in the cell. Each Process Vessel Cell contains a cell decontamination spray header. The ceilings of the Process Vessel Cells are constructed of reinforced concrete, with access ports for personnel and some equipment. With the exception of a few components (e.g., valves and CFF replacement), for which remote removal capability is provided, the design of equipment inside the Process Vessel Cells precludes the need for hands-on preventive or corrective maintenance and local inspections. Therefore, it is expected that the personnel access plugs will not be removed during the operating portion of the facility life cycle.

The Process Vessel Cells are "dark cells", in which all processes are remotely controlled. All Process Vessel Cells are equipped with access ports for installation of closed-circuit television

(CCTV) units with remote pan, zoom control, and audio output. With the exception of remotely operated CFF isolation and control valves, the Process Vessel Cells do not contain any process equipment with moving parts. The valve bodies are sleeved to shielded penetrations in the Operating Deck to allow removal and replacement of the valve internals. Removable shield plugs on the Operating Deck provide access to remove and replace the CFF cartridges (see Subchapter 2.10 and Figure 2-6). Thermocouples in the process tanks are installed in thermowells that penetrate the tank top and attach to guide pipes between the tank and Operating Deck to permit withdrawal and insertion of the thermocouples from outside the cell.

Because the design aspects in the preceding paragraph allow remote maintenance of all components that are not designed for the life of the facility, personnel entry into the Process Vessel Cells is not expected during the facility lifetime. However, each of the Process Vessel Cells has an access hatch in the floor of the Operating Deck located above the Process Vessel Cells that provides access to the cell for commissioning and D&D activities. The openings are closed by shielded plugs that require mechanical assistance for removal.

Sump level instruments are provided in all cells. A sump pump located in the North ASP P&VG can be used to transfer waste or contaminated sump solution to the laboratory for sampling. The contents of the sump can be diverted to other locations such as a drum-off station, ASDT (TK-601), or SSRT (TK-104). These sump level instruments are bubblers, where air is supplied at a very low flow rate into an open-ended pipe. The open-ended pipe allows a steady stream of bubbles to escape near the bottom of the sump. The pressure of the air in the open-ended pipe will be directly proportional to the height of liquid in the sump above the end of the pipe. A differential pressure transmitter providing indication of sump level is typically located remote from the sump (on the Operating Deck above in the case of the Process Vessel Cell sumps), allowing access to the transmitter for calibration or maintenance without approaching the sump. Level bubblers are also commonly used in SWPF process vessels.

**AST-A Process Cell**

The major component located in the AST-A process cell is AST-A (TK-101). The process cell sump contains a level instrument that alarms to alert Operators to abnormal liquid levels.

AST-A (TK-101) is constructed of welded stainless steel and has a capacity of approximately 37,500 gallons. Tank penetrations include the overflow line to the cell sump, common suction line for the AST-A Transfer Pumps (P-101-A/B) that terminates near the tank bottom, and waste feed line from the WTE. A riser connects the tank vapor space to the PVVS header, thereby maintaining the tank at a negative pressure with respect to the cell. An orifice in a capped tank nozzle ensures air in-leakage from the cell to the tank (purge air flow) during PVVS operation. Dilution air piping forces air into the tank vapor space. Dilution air is provided from the plant air compressors, Back-up Air Receivers, or portable supplies.

Other liquid addition paths into AST-A (TK-101) include:

- AFP MST/sludge – discharge of MST/Sludge Transfer Pump (P-224),
- ASDT (TK-601)/SAST (TK-127) contents – discharges of ASDT Transfer Pumps (P-601A/B),
- CSS recycle from the Alpha Sorption Filters Back pulse Tanks (TK-121A/B/C),
- SSFT (TK-109) contents (CSS) recycle – discharge of Salt Solution Feed Pumps (P-109A/B),
- Recycled MST/sludge – discharge of FFT-A Filter Feed/Solids Transfer Pumps (P-102-1A/B/C),
- Caustic solution,
- MST from MST Storage Tank (TK-311),
- Wash water – discharge of WWHT Transfer Pumps (P-105A/B),
- Flush water, and
- AST-A sample return from the Lab Hot Cell.

The major components inside AST-A (TK-101) are the pulse pots for the air pulse agitator (APA) and a spray header for internal decontamination. Subchapter 2.7.4.3 describes APA operation in detail. A segmented cooling coil made up of half-pipe is welded to the external wall and bottom head of the AST-A (TK-101). Process chilled water is circulated through this jacket to maintain AST-A (TK-101) contents within the optimum temperature range for sorption and retention of actinides and $^{90}$Sr on the MST. The external and internal components of the AST-A (TK-101) are shown in Figure 2-7 and Figure 2-8.

Instrumentation for AST-A (TK-101) includes thermocouples installed in a thermowell and redundant instruments for liquid density and density-compensated tank level. The thermocouple controls automatic temperature control valves (TCV) in the Process Chilled Water System (PCWS) return lines from the AST-A cooling jacket. Liquid level controls provide feedback to the APA control system.

The differential pressure (dP) between one of the tank level reference dip tubes and the cell provides remote indication of the dP from the cell atmosphere to the tank vapor space (i.e., tank dP above the liquid level). Gas samples from the tank vapor space can be obtained through the reference dip tube to measure the tank vapor space flammable vapor concentration. Each dip tube provides a non-credited flammable vapor dilution source for the tank vapor space.

**FFT-A Process Cell**

The major component located in the FFT-A Process Cell is FFT-A (TK-102). The process cell sump contains a level instrument that alarms to alert Operators to abnormal liquid levels.

FFT-A (TK-102) is constructed of welded stainless steel and has a capacity of approximately 37,500 gallons). Tank penetrations include the overflow line to the cell sump and a suction line for each FFT-A Filter Feed/Solids Transfer Pump (P-102-1A, B, or C). The suction lines terminate near the tank bottom. A riser connects the tank vapor space to the PVVS header, thereby maintaining the tank at a negative pressure with respect to the cell. An orifice in a capped tank nozzle ensures air in-leakage from the cell to the tank (purge air flow) during PVVS operation. Dilution air piping forces air into the tank vapor space. Dilution air is provided from either the plant air compressors, the Back-up Air Receivers, or portable supplies.

Other liquid addition paths into FFT-A (TK-102) include:

- MST/sludge from AST-A (TK-101) – discharge of AST-A Transfer Pumps (P-101A/B),
- Filter loop return flow from the Alpha Sorption Filters (FLT-102A/B/C),
- CSS recycle from the Alpha Sorption Filters Backpulse Tanks (TK-121A/B/C),
- SSFT (TK-109) contents or DSSHT (TK-207) contents – discharge of Salt Solution Feed Pumps (P-109A/B),
- ASDT (TK-601)/SAST (TK-127) contents – discharges of ASDT Transfer Pumps (P-601A/B),
- Flush water, and
- FFT-A sample return from the Laboratory Hot Cell.

Liquid removal paths include the normal tank discharge path and the tank sample line.

The major components inside FFT-A (TK-102) are the pulse pots for the APA and a spray header for internal decontamination. Subchapter 2.7.4.3 describes APA operation in detail. A segmented half-pipe cooling jacket is welded to the external wall and bottom head of the FFT-A (TK-102). Process chilled water is circulated through this jacket to maintain FFT-A (TK-102) contents within the optimum temperature range. The external and internal components of the FFT-A (TK-102) are shown in Figure 2-9 and Figure 2-10.

Instrumentation for FFT-A (TK-102) includes thermocouples, installed in a thermowell, and redundant instruments for liquid density and density-compensated tank level. The thermocouple controls automatic TCVs in the PCWS return lines from the FFT-A cooling jacket. Liquid level controls provide feedback to the APA control system.

The dP between one of the tank level reference dip tube and the cell provides remote indication of the dP from the cell atmosphere to the tank vapor space. Gas samples from the tank vapor space can be obtained through the reference dip tube to measure the tank vapor space flammable vapor concentration. Each dip tube provides a non-credited flammable vapor dilution source for the tank vapor space).

**ASDT Process Cell**

The ASDT Cell contains the Solvent Drain Tank (TK-208), SAST (TK-127), ASDT (TK-601), Alpha Sorption Filters (FLT-102A, B, C), Backpulse Tanks, and the Lab Drain Tank (TK-235). As previously described, the drain cell is located at the 88'-6" elevation and is designed to receive waste from the process and sized to contain design basis spill events. The primary tanks used to channel (overflow) design basis spill events to the ASDT Cell sump are the ASDT (TK-601) and Solvent Drain Tank (TK-208). The Lab Drain Tank (TK-235) is used to channel spills originating from sample lines in the Analytical Laboratory. The process cell sump contains a level instrument that alarms to alert Operators to abnormal liquid levels.

**Alpha Sorption Filters (FLT-102A, B, and C)**

Three Alpha Sorption Filters (FLT-102 A, B, and C) are located in the ASDT process cell.

The Alpha Sorption Filters are of a shell and tube design that utilizes sintered metal tubes as the filter medium. As the MST/sludge slurry containing the sorbed actinides and $^{90}$Sr circulates through the tubes, the $^{137}$Cs bearing filtrate (CSS) collects in filter shells and is sent to the SSFT (TK-109). Operation of the filters results in a gradual increase in the concentration of solids in FFT-A (TK-102) and the filter recirculation loop.

The filters are self-draining. The filter tubes, tube sheets, and upper head are assembled in a cartridge that is remotely removable from the filter shell (see Subchapter 2.10 and Figure 2-6). Each filter train incorporates a backpulse tank and flow paths used to backpulse the filter. Backpulsing removes fine solids from the sintered metal pores to restore filtrate flux through the tube walls.

The backpulse tanks are connected to the shell side of each filter. Compressed air aligned to the backpulse tank vapor space provides the motive pressure for backpulsing. Rupture disks located in the shielded Filter Vent Relief and Blowdown Enclosure (FVRBE) prevent over-pressurization of the filter shells and backpulse tanks. The rupture disk discharge header is connected to the FFT-A (TK-102) vapor space.

A two-pump configuration, consisting of a feed pump and a filter loop recirculation pump, is employed for each Alpha Sorption Filter sub-system, with the pumps located in the North ASP P&VG. A Feed/Solids Transfer Pump (P-102-1A/B/C) feeds approximately 60 gallons per minute (gpm) to its associated filter loop from FFT-A (TK-102). Flow through the Alpha Sorption Filter loop is provided by a Filter Recirculation Pump (P-102-2A/B/C). HX-102A/B/C remove heat from the salt solution imparted from the transfer and recirculation pumps and maintains the solution within its processing temperature. A bleed-back flow, equal to the feed flow rate minus the filtrate (CSS) flow rate, is returned to FFT-A (TK-102). The bleed-back flow rate also provides a degree of cooling to the filter loop.

Following shutdown of a filter loop, the loop piping drains back into FFT-A (TK-102). After completion of processing multiple batches of solids from AST-A (TK-101) and draining all filter

loops, one of the three Feed/Solids Transfer Pumps is used to transfer concentrated sludge from FFT-A (TK-102) to the SSRT (TK-104).

The filtrate production rate will vary as filtration progresses. It is anticipated that, as filtration proceeds, the filtrate flux rate will be high initially, but will decrease as the sludge approaches its target concentration. Flow control valves are provided to regulate the filtrate production rate; these valves are normally wide open or throttling to maintain a constant production rate. Additionally, the filtrate flow line is equipped with a turbidity instrument to detect any solids in the filtrate line due to filter breakthrough. During steady-state operations, filtrate is routed to the SSFT (TK-109). During filter startup operations, particularly with new filter units, some indications of high turbidity may occur. Therefore, the capability to recycle filtrate back to FFT-A (TK-102) is provided.

**ASDT (TK-601)**

The ASDT (TK-601) is constructed of welded stainless steel and has a capacity of approximately 4,400 gallons. Tank wall penetrations include the overflow line to the cell sump and two suction lines for the ASDT Discharge Pumps (P-601A/B). A riser connects the tank vapor space to the PVVS header, thereby maintaining the tank at a negative pressure with respect to the cell. An orifice in a capped tank nozzle ensures air in-leakage from the cell to the tank (purge air flow) during PVVS operation. Dilution air piping forces air into the tank vapor space. Dilution air is provided from either the plant air compressors, the Back-up Air Receivers, or portable supplies. PVVS orifice sizing and air dilution flows to this tank consider the potential presence of highly concentrated MST/sludge slurries.

The main liquid addition pathways to the ASDT (TK-601) include the:

- Filter Feed/Solids Transfer Pumps (P-102-1A/B/C) drains,
- Washing Filter Feed/Sludge Solids Transfer Pump (P-104-1) drain,
- Alpha Sorption Filters (FLT-102A/B/C) shell side drains,
- Washing Filter (FLT-104) shell side drain,
- Sumps in the North ASP P&VG,
- Low-level Drain Tank Transfer Pump (P-604) discharge,
- Drum-off/Decon Area Sump Pump (P-605) discharge,
- Solvent Drain Tank Pump (P-208A/B) discharge,
- Neutralization Tank (TK-317) for chemically adjusting the ASDT (TK-601),
- ASP Sump Transfer Pump (P-110) discharge,
- Lab Drain Tank Sample Pump (SP-235), and
- PMVS vent header (demister) condensate and flush.

Other non-routine liquid addition paths into the ASDT (TK-601) include:

- Lab Collection Tank A/B (TK-236/TK-237),
- FFT-A (TK-102) via Filter Feed/Solids Transfer Pumps (P-102-1A/B/C),
- FFT-B (TK-222) via Filter Feed/Solids Transfer Pumps (P-222-1A/B/C), and
- SSRT (TK-104) via Washing Filter Feed/Sludge Solids Transfer Pump (P-104-1).

Other liquid addition pathways include flush water and the recirculation path for the ASDT Discharge Pumps (P-601A/B). Mixing eductors are used in conjunction with these discharge pumps to suspend solids that may be in the vessel. Liquid removal paths are provided by P-601A/B.

Major components mounted inside the ASDT (TK-601) are a spray header for internal decontamination and mixing eductors (EDT-601-1 and EDT-601-2) driven by the discharge flow of P-601A/B. Priming diodes are provided on the pump suction lines to facilitate priming the pumps.

The ASDT (TK-601) also receives, through the North ASP labyrinth sump drain header, any upset condition (spills or leaks) that may occur including those that could be transferred from P-110, such as large leaks in a Process Vessel Cell.

Instrumentation for ASDT (TK-601) includes thermocouples, installed in a thermowell, and instruments for liquid density and density-compensated tank level.

**Solvent Drain Tank (TK-208)**

The Solvent Drain Tank (TK-208) is constructed of welded stainless steel and has a capacity of approximately 4,400 gallons. The Solvent Drain Tank (TK-208) receives the carried-over solvent removed from the strip effluent by the Strip Effluent Stilling Tank (TK-212) and the Strip Effluent Coalescer (TK-203). The Solvent Drain Tank (TK-208) also receives the contents of the CSSX contactors when they are drained. The variable speed Solvent Drain Tank Pump (P-208A/B) takes suction from the tank bottom and normally discharges to the inlet of the Extraction Contactors (EXT-201A-P) upstream of the Salt Solution Feed Cooler (HX-201). This flow path may also be directed to the SSFT (TK-109), ASDT (TK-601), or the drum-off station. Priming diodes are provided on the pump suction lines to facilitate priming the pumps. Mixing of the Solvent Drain Tank (TK-208) is effected by using mixing eductors and P-208A/B.

A riser connects the tank vapor space to the PVVS header, thereby maintaining the tank at a negative pressure with respect to the cell. Unlike the majority of process vessels, there is no orifice on the Solvent Drain Tank (TK-208) allowing direct communication between the cell atmosphere and the tank vapor space. Dilution air piping forces air into the tank vapor space; this purge air flow ensures that the vapor space is maintained at less than 25 percent (%) Composite Lower Flammability Limit (CLFL). Air dilution flow to the Solvent Drain Tank (TK-208) considers the presence of high concentrations of strip effluent and solvent. Dilution air to the

Solvent Drain Tank (TK-208) is provided from either the plant air compressors, the Back-up Air Receivers, or portable supplies.

The Solvent Drain Tank (TK-208) receives liquid from any upset condition (spills or leaks) that may occur in streams containing no MST solids and where solvent is likely to be present. Three large drain headers are connected to the Solvent Drain Tank (TK-208). One header drains the CSSX P&VG sumps, and indirectly the CSSX Pipe Chase drain. Another header receives overflow from the East and West CSSX Tank Cell sumps, and indirectly the Contactor Support Floor drain. The third large header drains sumps in South ASP Labyrinths #2 and #3.

Other penetrations in the Solvent Drain Tank (TK-208) include the tank sample return flow, along with solvent recovered from the Strip Effluent Stilling Tank (TK-212) and Strip Effluent Coalescer (TK-203), SEHT (TK-205), SSFT (TK-109), AFF via FLT-240, and the Lab Drain Tank (TK-235). The Solvent Drain Tank (TK-208) receives discharges from the Solvent Drain Tank (TK-208) sample return line (funnel from Lab Hot Cell #2), contactor vent header drain, PVVS condensate, and the CSSX pump drain headers. Additionally, the Solvent Drain Tank (TK-208) can receive liquid from the either the Nitric Acid Receipt Tank (TK-304) or the Neutralization Tank (TK-317) (via a siphon break) to adjust the chemistry of the Solvent Drain Tank (TK-208) contents or can receive cleaning chemicals to its flush header via a hose connection on the Operating Deck.

A bubbler instrument for tank level is provided for the Solvent Drain Tank (TK-208). The Solvent Drain Tank (TK-208) also has a capacitance probe for independently measuring liquid level within the tank. Samples from the Solvent Drain Tank (TK-208) are sent to the Hot Cell, using P-208A/B.

**SAST (TK-127)**

The SAST (TK-127) is constructed of welded stainless steel and has a capacity of approximately 4,400 gallons. SAST (TK-127) receives spent acid solutions from filter cleaning operations in both ASP and AFP. The purpose of this tank is to segregate the oxalates to prevent the precipitation of sodium oxalate in the ASDT (TK-601). After oxalic acid ($H_2C_2O_4$) cleaning, the spent acid is transferred to the SSRT (TK-104), following washing of the sludge, when sodium ion ($Na^+$) concentrations have been reduced. After $HNO_3$ cleaning, the spent $HNO_3$ is combined with the caustic flush solution and used for caustic dilution of the incoming waste feed.

Other liquid additions could be made to this tank including misdirected feed material from FFT-A (TK-102), FFT-B (TK-222), and SSRT (TK-104); feed material from ASDT (TK-601) transferred by P-601A/B; flush water; and a laboratory sampling return stream. Additionally, the SAST (TK-127) can receive liquid from the Neutralization Tank (TK-317) (via a siphon break) to adjust the chemistry of the tank contents. PVVS orifice sizing and air dilution flows to this tank consider the potential presence of highly concentrated MST/sludge slurries. Mixing of the SAST (TK-127) is effected by using mixing eductors and P-601A/B. Priming diodes are provided on the pump suction lines to facilitate priming the pumps.

Other non-routine liquid addition paths into the SAST (TK-127) include:

- FFT-A (TK-102) via Filter Feed/Solids Transfer Pumps (P-102-1A/B/C),
- FFT-B (TK-222) via Filter Feed/Solids Transfer Pumps (P-222-1A/B/C), and
- SSRT (TK-104) via Washing Filter Feed/Sludge Solids Transfer Pump (P-104-1).

Instrumentation for the SAST (TK-127) includes thermocouples, installed in a thermowell, and instruments for liquid density and density-compensated tank level.

A riser connects the tank vapor space to the PVVS header, thereby maintaining the tank vapor space at a negative pressure with respect to the cell. An orifice in a capped tank nozzle ensures air in-leakage from the cell to the tank (purge air flow) during PVVS operation. Dilution air piping forces air into the tank vapor space. Dilution air is provided from either the plant air compressors, the Back-up Air Receivers, or portable supplies.

**Lab Drain Tank (TK-235)**

The Lab Drain Tank (TK-235) is constructed of welded stainless steel and has a capacity of approximately 600 gallons. The drains in the Analytical Laboratory Hot Cells and gloveboxes go to the Lab Drain Tank (TK-235). The drain in the floor of the void space under the Hot Cells and the floor drain from the HX-250 area west of the Hot Cells also go to the Lab Drain Tank (TK-235). When sumps are sampled using P-110, the sample return flow is directed to the Lab Drain Tank (TK-235). The Lab Drain Tank (TK-235) is pumped to either the ASDT (TK-601), Drum-off Station, or Solvent Drain Tank (TK-208), as appropriate, after its contents are verified.

An instrument for tank level is provided for the Lab Drain Tank (TK-235).

PVVS orifice sizing and air dilution flows to this tank consider the potential presence of highly concentrated MST/sludge slurries.

A riser connects the tank vapor space to the PVVS header, thereby maintaining the tank at a negative pressure with respect to the cell. An orifice in a capped tank nozzle ensures air in-leakage from the cell to the tank (purge air flow) during PVVS operation. Dilution air forces air into the tank vapor space. Dilution air is provided from either the plant air compressors, the Back-up Air Receivers, or portable supplies.

**SSRT/WWHT Process Cell**

The SSRT/WWHT Process Cell contains the SSRT (TK-104), WWHT (TK-105), Cleaning Solution Dump Tank-A (CSDT-A) (TK-103), Washing Filter (FLT-104), and Backpulse Tank. The process cell sump contains a level instrument that alarms to alert Operators to abnormal liquid levels.

**SSRT (TK-104)**

The SSRT (TK-104) is constructed of welded stainless steel and has a capacity of approximately 6,300 gallons. Tank penetrations include the overflow line to the cell sump, the suction line for the Washing Filter Feed/Sludge Solids Transfer Pump (P-104-1), and the transfer lines from FFT-A (TK-102), MSTT (TK-224), and the Washing Filter (FLT-104). A riser connects the tank vapor space to the PVVS header, thereby maintaining the tank at a negative pressure with respect to the cell. An orifice in a capped tank nozzle ensures air in-leakage from the cell to the tank (purge air flow) during PVVS operation. Dilution air piping forces air into the tank vapor space. Dilution air is provided from either the plant air compressors, the Back-up Air Receivers, or portable supplies.

Other liquid addition paths into the SSRT (TK-104) include:

- ASDT (TK-601)/SAST (TK-127) contents – discharge of P-601A/B,
- AFF MST/sludge – discharge of MST/Sludge Transfer Pump (P-224),
- FFT-A (TK-102) contents – discharge of Filter Feed/Solids Transfer Pumps (P-102-1A/B/C),
- Washed MST/sludge from the Washing Filter (FLT-104), and
- PW for MST/sludge washing.

Other non-routine liquid addition paths into the SSRT (TK-104) include:

- Neutralization Tank (TK-317) for chemically adjusting the ASDT (TK-601).

The major components inside the SSRT (TK-104) are the pulse pots for the APA and a spray header for internal decontamination. Subchapter 2.7.4.3 describes APA operation in detail. A segmented half-pipe coil cooling jacket is welded to the external wall and bottom head of the SSRT (TK-104). Process chilled water is circulated through this jacket to remove mechanical and radioactive decay heat from the SSRT (TK-104) contents. The external and internal components of the SSRT (TK-104) are shown in Figure 2-11 and Figure 2-12.

Instrumentation for the SSRT (TK-104) includes thermocouples, installed in a thermowell, and instruments for liquid density and density-compensated tank level. The output of the thermocouples provides remote waste temperature indication and controls automatic TCVs in the PCWS return lines from the SSRT cooling jacket. Liquid level controls provide feedback to the APA control system.

The dP between the tank level reference dip tube and the cell provides remote indication of the dP from the cell atmosphere to the tank vapor space. Gas samples from the tank vapor space can be obtained through the reference dip tube to measure the tank vapor space flammable vapor concentration. The dip tubes provide a non-credited flammable vapor dilution source for the tank vapor space.

**Washing Filter (FLT-104)**

The design, installation, and performance of the Washing Filter (FLT-104) and its support equipment (e.g., backpulse tank and disentrainment pot) are identical to an Alpha Sorption Filter.

Concentrated MST/sludge from FFT-A (TK-102) and from the MSTT (TK-224) (in the two-strike mode) are transferred to the SSRT (TK-104). The waste must be washed to reduce the Na concentrations to below the DWPF WAC limits. A two-pump configuration, consisting of a feed pump and a filter loop recirculation pump, is employed for the Washing Filter, with the pumps located in the North ASP P&VG. A Washing Filter Feed/Solids Transfer Pump (P-104-1) feeds approximately 150 gpm to the Washing Filter loop. Flow through the Washing Filter is provided by a Washing Filter Recirculation Pump (P-104-2). Heat exchanger HX-104 removes heat from the salt solution from the transfer and recirculation pumps and maintains the solution within its process temperature band. A bleed-back flow, equal to the feed flow rate minus the filtrate flow rate, is returned to SSRT (TK-104). The bleed-back flow rate provides a degree of cooling to the filter loop.

Washing MST/sludge is a bleed and feed process. As filtrate is routed to the WWHT (TK-105), PW is continuously added to the SSRT (TK-104) at a rate equal to filtrate production. The filtrate from the washing process is sent to WWHT (TK-105) to be recycled as dilution water for subsequent AST-A (TK-101) batches. The washing process is continued until a sufficient amount of PW has been added and filtrate removed to result in an Na+ concentration of approximately 0.5 Molar (M). SSRT (TK-104) is then sampled and analyzed to qualify the batch for transfer to DWPF. Washed MST/sludge is transferred to the Precipitate Pump Tank (PPT) in the LPPP by the Washing Filter Feed/Sludge Solids Transfer Pump (P-104-1). Following completion of an MST/sludge transfer to the PPT, the transfer line is vented to allow for drainage.

**CSDT-A (TK-103)**

CSDT-A (TK-103) is constructed of welded stainless steel and has a capacity of approximately 1,000 gallons. Filter cleaning chemicals (caustic and acid) are transferred to CSDT-A (TK-103). The filter feed/solids transfer pumps and recirculation pumps are used to circulate the cleaning solution. During recirculation, a small flow is returned to CSDT-A (TK-103) through the bleed-back and filtrate line.

Tank wall penetrations include the overflow line to the cell sump, a sample pump suction line, and lines that feed the suction piping of any Filter Feed/Solids Transfer Pump (P-102-1A, B, or C) or the Washing Filter Feed/Solids Transfer Pump (P-104-1). CSDT-A (TK-103) can receive

liquids from the shell sides of the Alpha Sorption Filters, Washing Filter, and backpulse tanks. It can also receive highly concentrated streams from SSRT (TK-104) or FFT-A (TK-102), if a misdirected flow event occurred. De-ionized (DI) water can also be transferred to CSDT-A (TK-103).

A riser connects the tank vapor space to the PVVS header, thereby maintaining the tank at a negative pressure with respect to the cell. An orifice in a capped tank nozzle ensures air in-leakage from the cell to the tank (purge air flow) during PVVS operation. Dilution air piping forces air into the tank vapor space. Dilution air is provided from either the plant air compressors, the Back-up air Receivers, or portable supplies. PVVS orifice sizing and air dilution flows to this tank consider the presence of highly concentrated MST/sludge slurries.

The major component mounted inside CSDT-A (TK-103) is a spray header for internal decontamination. Instrumentation for CSDT-A (TK-103) includes instruments for temperature, liquid density, and density-compensated tank level.

**WWHT (TK-105)**

The WWHT (TK-105) is constructed of welded stainless steel and has a capacity of approximately 13,700 gallons. Tank wall penetrations include the overflow line to the cell sump, a suction line for the sample pump, and a common suction line for the WWHT Transfer Pumps (P-105A/B), which terminates near the tank bottom. The filtrate line from the Washing Filter (FLT-104) and a line from P-601A/B discharges into the tank vapor space.

A riser connects the tank vapor space to the PVVS header, thereby maintaining the tank at a negative pressure with respect to the cell. An orifice in a capped tank nozzle ensures air in-leakage from the cell to the tank (purge air flow) during PVVS operation. Dilution air piping forces air into the tank vapor space. PVVS orifice sizing and air dilution flows to this tank consider the presence of highly concentrated MST/sludge slurries, due to the potential for filter breakthrough during washing. Dilution air is provided from either the plant air compressors, the Back-up Air Receivers, or portable supplies.

Major components mounted inside the WWHT (TK-105) are a flush ring for internal decontamination and the pulse pots for the APA. Subchapter 2.7.4.3 describes APA operation in detail. The external and internal components of the WWHT (TK-105) are shown in Figure 2-13 and Figure 2-14.

Instrumentation for the WWHT (TK-105) includes thermocouples, installed in a thermowell, and instruments for liquid density and density-compensated tank level. The dP between the tank level reference dip tube and the cell provides remote indication of the dP from the cell atmosphere to the tank vapor space. Gas samples from the tank vapor space can be obtained through the reference dip tube to measure the tank vapor space $H_2$ concentration.

**SSFT Process Cell**

The major component located in the SSFT process cell is the SSFT (TK-109). The process cell sump contains a level instrument that alarms to alert Operators to abnormal liquid levels.

The SSFT (TK-109) is constructed of welded stainless steel and has a capacity of approximately 46,100 gallons. Tank wall penetrations include the overflow line to the cell sump, the suction line for the sample pump, and the common suction line for Salt Solution Feed Pumps (P-109-A/B) which terminates near the tank bottom. These pumps discharge through the Salt Solution Feed Cooler (HX-201) to the inlet of the Extraction Contactors (EXT-201A/P).

A riser connects the tank vapor space to the PVVS header, thereby maintaining the tank at a negative pressure with respect to the cell. An orifice in a capped tank nozzle ensures air in-leakage from the cell to the tank (purge air flow) during PVVS operation. Dilution air piping forces air into the tank vapor space. Dilution air is provided from either the plant air compressors, the Back-up air Receivers, or portable supplies. PVVS orifice sizing and air dilution flows to this tank consider the presence of large quantities of solvent, due to the potential for contactor upsets and the automatic diversion initiated by the Barium-137 Decay Tank (BDT) (TK-206) gamma monitor.

The primary liquid addition paths for the SSFT (TK-109) are the filtrate lines from the three CFFs. Other liquid addition paths into SSFT (TK-109) include flush water, recycled DSS from the DSSHT (TK-207), diverted BDT (TK-206) contents, and recycled material from the Solvent Drain Tank (TK-208).

Major components mounted inside SSFT (TK-109) are a flush nozzle ring header for internal decontamination and the pulse pots for the APA. Subchapter 2.7.4.3 describes APA operation in detail. The SSFT (TK-109) also has a solvent recovery weir located high in the tank, slightly below the overflow. If a floating layer of solvent develops in the SSFT (TK-109), the tank liquid level can be raised to the weir, allowing the tank to overflow into the weir, directing the mixture of salt solution and solvent to the Solvent Drain Tank (TK-208). There are no isolation valves in the solvent recovery line. A segmented half-pipe coil cooling jacket is welded to the external wall and bottom head of the SSFT (TK-109). Process chilled water is circulated through this jacket to remove mechanical and radioactive decay heat from the SSFT (TK-109) contents. The external and internal components of the SSFT (TK-109) are shown in Figure 2-15 and Figure 2-16.

Instrumentation for SSFT (TK-109) includes thermocouples, installed in a thermowell, and instruments for liquid density and density-compensated tank level. The dP between the tank level reference dip tube and the cell sump level reference dip tube provides remote indication of the dP from the cell atmosphere to the tank vapor space. Gas samples from the tank vapor space can be obtained through the reference dip tube to measure the tank vapor space flammable vapor concentration. The dip tubes provide a non-credited flammable vapor purge capability for the tank vapor space.

**SEHT Process Cell**

The major component located in the SEHT process cell is the SEHT (TK-205). The process cell sump contains a level instrument that alarms to alert Operators to abnormal liquid levels.

The SEHT (TK-205) is constructed of welded stainless steel and has a capacity of approximately 19,700 gallons. Tank wall penetrations include the overflow line to the cell sump and the suction line for SEHT Transfer Pumps (P-205A/B) that terminates near the tank bottom. These pumps discharge to the strip effluent transfer line to DWPF that exits through the WTE. The transfer line to DWPF can be vented through a pipe to the SEHT (TK-205) head space by aligning valves in the WTE. This vent path is used to flush the SWPF piping after a strip effluent transfer to DWPF. Two sample lines also penetrate the tank wall. The normal sample line takes samples from slightly above the lower tangent line. The lower sample line removes liquid from the as low as practical in the tank and is used for recovering solvent from the tank heel.

The outlet from the Strip Effluent Pump Tank (TK-215) discharges into a downcomer that terminates near the bottom of the SEHT (TK-205). A vent hole near the top of the downcomer prevents potential siphons out of the SEHT (TK-205) via this line.

A riser connects the tank vapor space to the PVVS header, thereby maintaining the tank at a negative pressure with respect to the cell. An orifice in a capped tank nozzle ensures air in-leakage from the cell to the tank (purge air flow) during PVVS operation. Dilution air piping forces air into the tank vapor space. Dilution air is provided from either the plant air compressors, the Back-up air Receivers, or portable supplies. PVVS orifice sizing and air dilution flows to this tank consider the presence of highly concentrated strip solution in the presence of large quantities of organics.

Other liquid addition paths into the SEHT (TK-205) include flush water and a line from the Neutralization Tank (TK-317) that can be used to adjust the chemistry of the SEHT (TK-205) contents.

The major components mounted inside the SEHT (TK-205) are a flush spray header for internal decontamination and eductors for tank mixing. The SEHT (TK-205) also has a solvent recovery weir located high in the tank, slightly below the overflow. If a floating layer of solvent develops in the SEHT (TK-205), the tank liquid level can be raised to the weir, allowing the tank to overflow into the weir, directing the mixture of salt solution and solvent to the Solvent Drain Tank (TK-208). There are no isolation valves in the solvent recovery line. A segmented half-pipe cooling jacket is welded to the external wall and bottom head of the SEHT (TK-205). Process chilled water is circulated through this jacket to remove mechanical and radioactive decay heat from the SEHT (TK-205) contents. The external and internal components of the SEHT (TK-205) are shown in Figure 2-17 and Figure 2-18.

Instrumentation for the SEHT (TK-205) includes thermocouples, installed in a thermowell, and instruments for tank level. The output of the thermocouples provides remote waste temperature indication and control TCVs in the PCWS return lines from the SEHT cooling jacket.

The dP between the tank level reference dip tube and the cell provides remote indication of the dP from the cell atmosphere to the tank vapor space. Gas samples from the tank vapor space can be obtained through the reference dip tube to measure the tank vapor space flammable vapor concentration. The dip tubes provide a non-credited purge supply to the tank vapor space.

#### 2.4.1.3 North ASP P&VG

The North ASP P&VG is adjacent to and north of the Process Vessel Cells at the 100-ft elevation. The interconnecting piping, isolation valves, and process pumps for the primary ASP vessels are located in this P&VG. Pumps located in the North ASP P&VG are:

- Alpha Sorption Transfer Pumps P-101A/B,
- Filter Feed/Solids Transfer Pumps P-102-1A and Recirculation Pump P-102-2A,
- Filter Feed/Solids Transfer Pumps P-102-1B and Recirculation Pump P-102-2B.
- Filter Feed/Solids Transfer Pumps P-102-1C and Recirculation Pump P-102-2C,
- Washing Filter Feed/Sludge Solids Transfer Pump P-104-1 and Recirculation Pump P-104-2,
- ASP Sump Transfer Pump P-110, and
- ASP Secondary Process Chilled Water Loop Pumps, P-015A/B.

The gallery ceiling and walls are constructed of reinforced concrete for shielding purposes and NPH protection. Pumps and their associated piping and valves are contained within reinforced concrete labyrinths with entrances from the corridor along the north wall of the P&VG. The reinforced concrete walls of the pump labyrinths (minimum thickness 12 inches) provide missile protection and sufficient radiation shielding to allow routine controlled passage through the P&VG corridor (see S-EIP-J-00004, *SWPF Final Design ALARA Review Report*[13]). The labyrinths provide secondary liquid waste confinement due to having sloped floors that direct any liquid spilled within the labyrinth away from the corridor and into a sump.

Primary access and egress for the North ASP P&VG are provided via the Controlled Entry Area on the east end. Emergency-only egress is provided through a door at the west end of the P&VG corridor that leads into the east-west corridor of the Northern FSA, adjacent to the CR.

The pump suction and discharge paths in the North ASP P&VG are limited in length and can be flushed to reduce gamma dose rates and remove internal contamination, which allows hands-on removal and maintenance within each individually shielded labyrinth. The labyrinths have bridge cranes to lift and move components (e.g., pumps, motors, valves) in support of maintenance activities. Local instrumentation and controls (I&Cs) are designed and located to limit P&VG labyrinth entries for surveillance and maintenance.

Sumps in the pump labyrinths gravity-drain into the ASDT (TK-601), located in the ASDT Cell. An Emergency Shower/Eyewash Station (ESEWS) is provided on the west and east ends of the North ASP P&VG.

#### 2.4.1.4 South ASP P&VG

The South ASP P&VG is south of the Process Vessel Cells at the 100-ft elevation. The interconnecting piping, isolation valves, and process pumps for the WWHT (TK-105), Solvent Drain Tank (TK-208), SAST (TK-127), and the ASDT (TK-601) are located in this P&VG. Pumps located in the South ASP P&VG are:

- Wash Water Transfer Pumps P-105A/B,
- ASDT Transfer Pumps P-601A/B, and
- Solvent Drain Tank Pumps P-208A/B.

The gallery ceiling and exterior and interior walls are constructed of reinforced concrete for shielding purposes and NPH protection. One or more pumps and their associated inlet and outlet isolation valves and suction and discharge piping are contained within reinforced concrete labyrinths with entrances from the corridor along the south wall of the P&VG. The pump labyrinths provide missile protection, waste confinement, and sufficient radiation shielding to allow routine controlled passage through the P&VG corridor.

Primary access and egress for the South ASP P&VG are provided from the east end via the airlock between the South Corridor and the AFF. Entry is also provided through the CSSX P&VG corridor. An exit is located at the west end of the CSSX P&VG corridor through a door to a stairwell and an Emergency Exit Only (EEO) door that leads out of the CPA building.

The pump suction and discharge paths in the South ASP P&VG are limited in length and can be flushed to reduce gamma dose rates and remove internal contamination, which allows hands-on removal and maintenance within each individually shielded labyrinth. The labyrinths have bridge cranes to lift and move components (e.g., pumps, motors, valves) in support of maintenance activities. Local I&Cs are designed and located to limit P&VG labyrinth entry for surveillance and maintenance.

The sump in the ASDT Transfer Pump labyrinth gravity-drains to the ASDT (TK-601) located in the ASDT Cell. Sumps in the other pump labyrinths gravity-drain into the Solvent Drain Tank (TK-208) located in the ASDT Cell. An ESEWS is provided on the west end of the South ASP P&VG.

#### 2.4.1.5 Sample P&VG

The Sample P&VG is adjacent to and west of the South ASP P&VG and south of the Process Vessel Cells at the 100-ft elevation. The interconnecting piping, isolation valves, and sample pumps are located in this P&VG. Pumps located in the Sample P&VG are:

- AST-A Sample Pump SP-101,
- FFT-A Sample Pump SP-102,
- CSDT-A Sample Pump SP-103,

- SSRT Sample Pump SP-104,
- WWHT Sample Pump SP-105,
- SSFT Sample Pump SP-109,
- SEHT Sample Pump SP-205, and
- Lab Drain Tank Sample Pump SP-235.

The gallery ceiling and walls are constructed of reinforced concrete for shielding purposes and NPH protection. The pumps and their associated inlet and outlet isolation valve and suction and discharge piping are contained within a reinforced concrete labyrinth with an entrance from the corridor along the south wall of the P&VG. The pump labyrinth provides missile protection, waste confinement, and sufficient radiation shielding to allow routine controlled passage through the P&VG corridor.

The pump suction and discharge paths in the Sample P&VG are limited in length and can be flushed to reduce gamma dose rates and remove internal contamination, which allows hands-on removal and maintenance within the labyrinth. The labyrinth has monorail hoists to lift and move pumps, motors, and valves between the labyrinth and the corridor. Local I&Cs are designed and located to limit P&VG labyrinth entries for surveillance and maintenance.

The Sample P&VG sump gravity-drains into the Solvent Drain Tank (TK-208); located in the ASDT Cell. The floor drain from the Contactor Support Floor Chase on the 116-ft elevation directs flow into the Sample P&VG Sump. An ESEWS is provided at the entrance to the Sample P&VG.

#### 2.4.1.6 CSSX Area

The CSSX Area is adjacent to and south of the Process Vessel Cells, and is sub-divided into the CSSX P&VG and the East and West CSSX Tank Cells at the 100-ft elevation and the contactor area above. The contactor area is further sub-divided into the Contactor Support Floor at the 116-ft elevation and the Contactor Operating Deck at the 124-ft elevation. With the exception of the Contactor Operating Deck floor, the walls and ceilings are constructed of reinforced concrete for shielding purposes and NPH protection.

The contactor area contains 36 annular centrifugal, counter-current flow contactors. A vent header connected to the inlet and outlet process interstage piping runs east and west near the middle of the area, above the 124-ft elevation. The 16-stages of Extraction Contactors (EXT-201A-P) and 2-stages of Scrub Contactors (EXT-202-A-B) are in a line north of the vent header. The 2-stages of Caustic Wash Contactors (EXT-204A-B) and 16-stages of Stripping Contactors (EXT-203A-P) are in a line south of the vent header. All contactors have 10-inch rotor diameters, 10-horsepower 480-VAC motors, and a maximum 30-gpm throughput rating. The scrub, strip, and wash contactors all have a sleeve in the annular space between the contactor housing and the rotor that reduces the volume of the mixing zone. Contactor instrumentation

includes a vibration sensor, high-vibration alarm, bearing temperature instruments, and speed indication.

An annular centrifugal contactor operates as both contactor and separator. Figure 2-19 shows a cutaway view of the contactor housing, rotor, and significant design features, including the liquid flow paths. Two immiscible liquids of different densities are fed to the separate inlets and rapidly mixed in the annular space between the spinning rotor and stationary housing. The areas above the liquid levels are vapor space. The mixed phases are directed toward the center of the rotor bottom by radial vanes in the housing base. As the liquids enter the central opening of the rotor, they are accelerated toward the wall.

The mixed phases are rapidly accelerated to rotor speed and separation begins as the liquids are displaced upward. Weirs at the top of the rotor divert the separated liquids into annular collector rings that lead to the discharge piping.

Process piping and contactor bodies are supported by structural steel attached to the concrete Contactor Support Floor at elevation 116 ft. The Contactor Support Floor has a stainless steel liner that drains to the Solvent Drain Tank (TK-208) via the sump in the East CSSX Tank Cell. Non-routine access to this area is from the Contactor Operating Deck.

The Contactor Operating Deck is constructed of steel grating and supported by structural steel. To permit access to the contactor motors for maintenance, the contactor drive shafts pass through openings in the Contactor Operating Deck grating to motors directly accessible on the Contactor Operating Deck. The Contactor Operating Deck is equipped with CCTV cameras to allow remote monitoring of conditions. Monorail hoists on a common track attached to the ceiling support installation and removal of contactor components.

The CSSX P&VG (100-ft elevation) is directly below the Contactor Support Floor and north of the East/West CSSX Tank Cells. It houses the interconnecting piping, isolation valves, and process pumps for the CSSX process. Pumps located in the CSSX P&VG are:

- Salt Solution Feed Pumps P-109A/B,
- Solvent Feed Pumps P-202A/B,
- Caustic Wash Tank Pumps P-204A/B,
- Strip Effluent Transfer Pumps P-205A/B,
- BDT Transfer Pumps P-206A/B,
- CSSX Tank Cell Sump Transfer Pump P-218,
- Strip Effluent Pump Tank Pumps P-215A/B, and
- Solvent Strip Feed Pumps P-217A/B.

Pumps and their associated inlet and outlet isolation valve and suction and discharge piping are contained within reinforced concrete labyrinths with entrances from the central corridor through

the CSSX P&VG. The pump labyrinths allow routine, controlled passage through the P&VG corridor.

Primary access and egress for the CSSX P&VG are provided on the east end through the adjacent south ASP P&VG corridor, with egress provided through a door at the west end of the gallery, that leads into the southwest stairwell, which has an EEO to the outside.

The pump suction and discharge paths in the CSSX P&VG are limited in length and can be flushed to reduce gamma dose rates and reduce internal contamination, which allows hands-on removal and maintenance within each individually shielded labyrinth. The labyrinths have bridge cranes to lift and move components (e.g., pumps, motors, valves) in support of maintenance activities. Local I&Cs are designed and located to limit P&VG labyrinth entries for surveillance and maintenance. Sumps in the CSSX pump labyrinths gravity-drain into the Solvent Drain Tank (TK-208).

The East and West CSSX Tank Cells are located south of the CSSX P&VGs. Strip effluent streams are primarily located in the East CSSX Tank Cell, while lower-radiation field tanks such as the Solvent Hold Tank (SHT) (TK-202), BDT (TK-206), and Caustic Wash Tank (TK-204) are located in the West CSSX Tank Cell. A notable exception where piping for a high activity stream is in the West CSSX Tank Cell is the strip effluent supply to the Strip Effluent Coalescer (TK-203), including the Strip Effluent Coalescer Feed Pumps. Each CSSX Tank Cell has a concrete cell floor with a stainless steel liner and a sump. Each wet sump is provided with a standpipe located approximately one inch below the floor level that drains into the Solvent Drain Tank (TK-208). A sump pump (P-218) is available to send sump samples up to the Laboratory Hot Cell for analysis and has the ability to transfer sump contents to Solvent Drain Tank (TK-208). Each sump is instrumented with level indication.

The West CSSX Tank Cell contains equipment (e.g., valves, valve actuators, pumps) that requires periodic maintenance. Although the Strip Effluent Coalescer (TK-203) is located in the East CSSX Tank Cell, its head is removed and the coalescer media is replaced from the West CSSX Tank Cell, via a penetration in the wall. The West CSSX Tank Cell is equipped with a CCTV camera to allow remote monitoring of cell conditions. Access and egress for the West CSSX Tank Cell is from the CSSX P&VG corridor through a locked steel door into an airlock and through a second steel door.

No equipment in the East CSSX Tank Cell requires periodic maintenance and no corrective maintenance of equipment in this cell is anticipated and, therefore, personnel entry to the East CSSX Tank Cell is not expected during the lifetime of the facility. However, an access hatch in the floor of the CSSX Tank Cell Operating Deck provides access to the East CSSX Tank Cell for commissioning and D&D activities. The access hatch is closed by a shielded plug that requires mechanical assistance for removal.

**Salt Solution Feed Cooler (HX-201)**

The Salt Solution Feed Cooler located in P-109 labyrinth uses the PCWS to maintain the CSS entering the Extraction Contactors (EXT-201A-P) at the optimal temperature for $^{137}$Cs extraction. A temperature controller modulates a valve to control the flow of process chilled water to the heat exchanger.

**DSS Stilling Tank (TK-211)**

The DSS Stilling Tank (TK-211) is constructed of welded stainless steel and has a capacity of approximately 220 gallons. The tank receives the aqueous DSS stream from the Extraction Contactors (EXT-201A-P) and utilizes weir overflow elevations, and reduced linear flow velocity to effect the initial separation of solvent carried over in the DSS. The less-dense solvent collects on the liquid surface near the tank top and drains to the SHT (TK-202). The aqueous DSS stream continues to the BDT (TK-206) and then on to the DSS Coalescer (TK-201).

The flammable vapor generation rate in this tank is very low under normal conditions. However, under certain process upset conditions, this tank could exhibit higher generation rates if $^{137}$Cs is in the vessel. A riser connects the tank vapor space to the PVVS header, thereby maintaining the tank at a negative pressure with respect to the cell. An orifice in a capped tank nozzle ensures air in-leakage from the cell to the tank (purge air flow) during PVVS operation. Dilution air piping forces air into the tank vapor space. Dilution air is provided from either the plant air compressors, the Back-up air Receivers, or portable supplies. PVVS orifice sizing and air dilution flows to this tank consider the presence of organics and $^{137}$Cs in this vessel.

**BDT (TK-206)**

The BDT (TK-206) is a cylindrical, flat-bottomed tank constructed of welded stainless steel that is separated into quadrants by vertical plates. The BDT (TK-206) has a working volume of approximately 1,200 gallons (three of four quadrants full). The capacity of the BDT (TK-206) to overflow is approximately 2,100 gallons. The top of the quadrant separator plates is below the tank overflow, so the tank has a single common vapor space and a single overflow line. The extraction process removes only $^{137}$Cs, leaving an equilibrium concentration of the intermediate Cs decay product, metastable $^{137m}$Barium (Ba), in the DSS. The aqueous DSS stream from the DSS Stilling Tank (TK-211) is directed by a set of valves to one of the four tank quadrants. The sequential filling, storing, and emptying of the tank quadrants creates sufficient holdup time to support radioactive decay of $^{137m}$Ba ($T_{1/2}$ = 2.55 minutes) to stable $^{137}$Ba. The reduction in gamma radiation from the decay of $^{137m}$Ba allows the DSS to be sent to the AFF via the DSS Coalescer (TK-201), where it is further processed in unshielded tanks.

The variable speed BDT Transfer Pumps (P-206A/B) are aligned to sequentially take suction on each tank quadrant via nozzles exiting the bottom of the tank. The pumps discharge to the DSS Coalescer (TK-201) or SSFT (TK-109), depending on waste processing requirements and DSS quality. A riser connects the BDT vapor space to the PVVS header, thereby maintaining the tank at a negative pressure with respect to the cell. An orifice in a capped tank nozzle ensures air in-

leakage from the cell to the tank (purge air flow) during PVVS operation. Dilution air piping forces air into the tank vapor space. Dilution air is provided from either the plant air compressors, the Back-up air Receivers, or portable supplies. PVVS orifice sizing and air dilution flows to this tank consider the presence of organics and $^{137}$Cs in this vessel.

Other penetrations in the BDT (TK-206) include the tank sample return flow (returned to same tank quadrant that it is withdrawn from) and flush water. Tank level indication is provided for each quadrant of the tank. The flammable vapor generation rate in BDT (TK-206) is very low under normal conditions. However, under certain process upset conditions, this tank could exhibit higher generation rates if solvent and/or $^{137}$Cs is in the vessel, such as would occur if a contactor malfunctioned.

**DSS Coalescer (TK-201)**

While the DSS Coalescer (TK-201) is not located in the CSSX Tank Cell, it is discussed here for convenience because it is an important component of the CSSX solvent removal capability and an integral part of the CSSX process. This vessel is actually located in an unshielded area on an elevated maintenance platform in the CSSX Contactor Drop Area (approximately 124-ft elevation).

The DSS Coalescer (TK-201) is constructed of stainless steel approximately 3-ft in diameter and 15-ft long, including dished ends. It is a horizontal cylinder with an inlet at one end and an outlet on the bottom of the vessel on the opposite end. The DSS Coalescer (TK-201) receives DSS from the BDT (TK-206). The incoming feed is expected to contain primarily aqueous solution, with some carryover of solvent. To recover the solvent, mesh elements at the inlet of the DSS Coalescer (TK-201) agglomerate incoming solvent. As solvent and aqueous are immiscible, the solvent floats on the surface. A baffle arrangement prevents solvent from getting to the aqueous outlet because only the more dense aqueous flows underneath the first baffle. As incoming feed continues, the aqueous overflows the second baffle and drains to a receipt tank in the AFF (IST [TK-220] and AST–B [TK-221], if in single-strike mode, and IST [TK-220] only, if in multi-strike mode). As the solvent layer builds up on the surface within the DSS Coalescer (TK-201) and thickens to the level of the overflow, the solvent drains back to the SHT (TK-202) and is recovered.

The flammable vapor generation rate in this tank is very low under normal conditions, as high $^{137}$Cs conditions would be identified upstream by the in-line gamma monitor and diverted to SSFT (TK-109). However, under certain process upset conditions, this tank could contain higher than normal soluble actinides that would go undetected (e.g., missed MST strike, low resident time in AST-A [TK-101], etc.). A riser connects the tank vapor space to the PVVS header, thereby maintaining the tank at a negative pressure with respect to the surrounding room. Unlike the majority of process vessels, there is no orifice on the DSS Coalescer (TK-201) allowing direct communication between the room atmosphere and the tank vapor space. Dilution air piping forces air into the tank vapor space. This purge air flow maintains the tank vapor space less than 25% of CLFL. The air dilution flow to this tank considers the presence of organics and minor contributions from actinide and $^{137}$Cs in this vessel.

DSS Coalescer (TK-201) operates at an overflow condition, and level instrumentation is provided to identify upset conditions. To monitor media operation and identify clogging or obstruction, dP indication across the coalescer media is provided.

**Solvent Strip Feed Tank (TK-217)**

The Solvent Strip Feed Tank (TK-217) is constructed of welded stainless steel and has a capacity of approximately 53 gallons. The tank receives the scrubbed solvent stream from the Scrub Contactors (EXT-202A-B) and provides adequate volume to dampen flow variations in the CSSX process and maintain net positive suction head (NPSH) for the Solvent Strip Feed Pumps (P-217A/B). The variable speed/displacement Solvent Strip Feed Pumps (P-217A/B) take suction from the tank side and discharge through the Solvent Strip Heat Exchanger (HX-217A/B) to the Stripping Contactors (EXT-203A-P).

The flammable vapor generation rate in Solvent Strip Feed Tank (TK-217) is nominally high, due to the presence of solvent and the radiolytic heat load of high $^{137}$Cs conditions. A riser connects the tank vapor space to the PVVS header, thereby maintaining the tank at a negative pressure with respect to the cell. Unlike the majority of process vessels, there is no orifice on the Solvent Strip Feed Tank (TK-217) allowing direct communication between the cell atmosphere and the tank vapor space. Dilution air piping forces air into the tank vapor space. This purge air flow maintains the tank vapor space less than 25% of CLFL. Air dilution flows to this tank consider the presence of organics and $^{137}$Cs in this vessel.

**Solvent Strip Heat Exchangers (HX-217A/B)**

The Solvent Strip Heat Exchangers are shell and tube heat exchangers that heat the scrubbed solvent entering the Stripping Contactors (EXT-203A-P) to the optimal temperature for $^{137}$Cs stripping. A temperature controller modulates a valve to control the flow of tempered water to the heat exchangers.

**SHT (TK-202)**

The SHT (TK-202) is constructed of welded stainless steel and has a capacity of approximately 710 gallons.

The tank receives the stripped and washed solvent stream from the Caustic Wash Contactors (EXT-204A-B). The variable speed/displacement Solvent Feed Pumps (P-202A/B) take suction from the tank bottom and discharge to the inlet of the Extraction Unit (EXT-201A-P). Other penetrations in the SHT (TK-202) include the tank sample return flow and flush water.

Other liquid addition paths into the SHT (TK-202) include:

- Solvent or solvent components from the Solvent Makeup Tank (TK-313),
- Solvent recovered from the DSS Stilling Tank (TK-211) and the DSS Coalescer (TK-201), and

- Solvent composition adjustment funnel located on the CSSX Tank Cell Operating Deck.

A circumferential half-pipe coil cooling jacket is welded to the external wall of SHT (TK-202). Process chilled water is circulated through this jacket to control the temperature of the SHT (TK-202) contents. Mixing eductor EDT-202 is driven by the discharge of the operating Solvent Feed Pump (P-202A/B).

Instrumentation for the SHT (TK-202) includes a thermowell-mounted temperature element and indicating controller and tank level instrumentation. The temperature element provides remote solvent temperature indication and controls a TCV in the PCWS return line from the SHT cooling jacket.

The flammable vapor generation rate in this tank is very low under normal conditions, as the solvent would have been stripped of $^{137}$Cs. However, under certain process upset conditions, such as low strip flow, this tank could contain higher than normal $^{137}$Cs concentrations, due to failure of the strip makeup pumps, contactor failure, etc. A riser connects the tank vapor space to the PVVS header, thereby maintaining the tank at a negative pressure with respect to the cell. Unlike the majority of process vessels, there is no orifice on the SHT (TK-202) allowing direct communication between the cell atmosphere and the tank vapor space. Dilution air piping forces air into the tank vapor space. This purge air flow maintains the tank vapor space less than 25% of CLFL. Air dilution flows to this tank consider the presence of organics and $^{137}$Cs.

**Solvent Feed Coolers**

The Solvent Feed Coolers (HX-202A/B) are shell and tube heat exchangers that aid in controlling the temperature of the solvent entering the Extraction Contactors (EXT-201A-P) at the optimum temperature for extraction. A temperature controller modulates a valve to control the flow of process chilled water to the heat exchangers.

**Strip Effluent Stilling Tank (TK-212)**

The Strip Effluent Stilling Tank (TK-212) is constructed of welded stainless steel and has an approximate overflow volume of 29 gallons. Strip Effluent Stilling Tank (TK-212) receives the aqueous strip effluent stream from the Stripping Contactors (EXT-203A-P). It utilizes weirs and reduced linear flow velocity to effect the initial separation of solvent carried over in the strip effluent. Due to the low flow rates to this vessel (1.5 gpm), residence time in the vessel is long enough to allow large bubbles of the less dense solvent to collect on the liquid surface near the tank top. Once a layer thickens to the overflow, it drains to the Solvent Drain Tank (TK-208). The aqueous strip effluent stream continues to the Strip Effluent Coalescer (TK-212).

The flammable vapor generation rate in this tank is very high under normal conditions because it contains concentrated strip effluent ($^{137}$Cs). Under certain process upset conditions, this tank could contain higher than normal $^{137}$Cs concentrations due to low strip flow, etc. A riser connects the tank vapor space to the PVVS header, thereby maintaining the tank vapor space at a negative pressure with respect to the cell. An orifice in a capped tank nozzle ensures air in-leakage from

the cell to the tank (purge air flow) during PVVS operation. Dilution air piping forces air into the tank vapor space. Dilution air is provided from either the plant air compressors, the Back-up Air Receivers, or portable supplies. PVVS orifice sizing and air dilution flows to this tank consider the presence of organics and highly concentrated strip effluent.

Other penetrations in the Strip Effluent Stilling Tank (TK-212) include a tank-bottom drain path to the Strip Effluent Coalescer (TK-203). Tank level indication is provided.

**Strip Effluent Coalescer (TK-203)**

The Strip Effluent Coalescer (TK-203) is constructed of stainless steel and has a design capacity of 26 gallons. Strip Effluent Coalescer (TK-203) receives strip effluent from the Strip Effluent Stilling Tank (TK-212) and utilizes large-area tortuous paths, differential inlet and outlet elevations, and reduced linear flow velocity to separate most of the immiscible solvent carried over in the strip effluent. Mesh elements cause the immiscible solvent to agglomerate on the large-surface areas and rise to the surface of the strip effluent. The less-dense solvent collects on the liquid surface near the tank top and drains to the Solvent Drain Tank (TK-208). The strip effluent drains from the Strip Effluent Coalescer (TK-203) bottom to the Strip Effluent Pump Tank (TK-215).

The flammable vapor generation rate in this tank is very high under normal conditions because it contains concentrated strip effluent ($^{137}Cs$). However, under certain process upset conditions, this tank could contain higher than normal $^{137}Cs$ concentrations due to low strip flow, etc. A riser connects the tank vapor space to the PVVS header, thereby maintaining the tank vapor space at a negative pressure with respect to the cell. An orifice in a capped tank nozzle ensures air in-leakage from the cell to the tank (purge air flow) during PVVS operation. Dilution air piping forces air into the tank vapor space. Dilution air is provided from either the plant air compressors, the Back-up Air Receivers, or portable supplies. PVVS orifice sizing and air dilution flows to this tank consider the presence of organics and highly concentrated strip effluent.

The Strip Effluent Coalescer (TK-203) operates at an overflow condition, and level instrumentation is not required; however, level indication is provided for upset monitoring. To monitor media operation and identify clogging or obstruction, dP indication across the coalescer media to monitor media is provided.

**Strip Effluent Pump Tank (TK-215)**

The Strip Effluent Pump Tank (TK-215) is constructed of welded stainless steel and has a capacity of approximately 54 gallons. The Strip Effluent Pump Tank (TK-215) receives the strip effluent stream from the Strip Effluent Coalescer (TK-203) and provides adequate volume to dampen flow variations in the CSSX process and maintain NPSH for the Strip Effluent Pump Tank Pumps (P-215A/B). The aqueous stream enters the top of the Strip Effluent Pump Tank (TK-215). At the output of this tank are the Strip Effluent Pump Tank pumps and the downstream gamma monitors. The gamma levels detected are compared against the normal

gamma radiation levels expected for the target concentration of $^{137}Cs$. If the gamma detection senses higher than normal radiation levels, an alarm is provided so that Operators can take actions to correct the out-of-specification condition.

The variable speed Strip Effluent Pump Tank pumps take suction from the tank bottom and discharge to the SEHT (TK-205).

The flammable vapor generation rate in this tank is very high under normal conditions because it contains concentrated strip effluent ($^{137}Cs$). However, under certain process upset conditions, this tank could contain higher than normal $^{137}Cs$ concentrations due to low strip flow, etc. A riser connects the tank vapor space to the PVVS header, thereby maintaining the tank vapor space at a negative pressure with respect to the cell. An orifice in a capped tank nozzle ensures air in-leakage from the cell to the tank (purge air flow) during PVVS operation. Dilution air piping forces air into the tank vapor space. Dilution air is provided from either the plant air compressors, the Back-up Air Receivers, or portable supplies. PVVS orifice sizing and air dilution flows to this tank consider the presence of organics and highly concentrated strip effluent.

**Caustic Wash Tank (TK-204)**

The Caustic Wash Tank (TK-204) is constructed of welded stainless steel and has a capacity of approximately 490 gallons. The variable speed Caustic Wash Tank Pumps (P-204A/B) take suction from the tank bottom and discharge to the inlet of the Caustic Wash Contactors (EXT-204A-B). The caustic wash water returns to the Caustic Wash Tank (TK-204). The tank is purged and refilled from the Caustic Makeup Tank (TK-303) on an as-needed basis; the pH provides indication as to when the tank needs to be purged.

Other penetrations in the Caustic Wash Tank (TK-204) include the tank sample return flow, flush water, a solvent recovery pathway to the Solvent Drain Tank (TK-208) from a weir near the top of the tank, and an overflow line to the West CSSX Tank Cell sump. Instrumentation for tank level is provided.

The flammable vapor generation rate in the Caustic Wash Tank (TK-204) is very low under normal conditions. However, under certain process upset conditions, this tank could contain higher than normal $^{137}Cs$ concentrations due to failure of the strip makeup pumps, contactor failure, etc. A riser connects the tank vapor space to the PVVS header, thereby maintaining the tank vapor space at a negative pressure with respect to the cell. An orifice in a capped tank nozzle ensures air in-leakage from the cell to the tank (purge air flow) during PVVS operation. Dilution air piping forces air into the tank vapor space. Dilution air is provided from either the plant air compressors, the Back-up Air Receivers, or portable supplies. PVVS orifice sizing and air dilution flows to this tank consider the presence of organics and $^{137}Cs$.

### 2.4.1.7 CFF Remote Removal

A shielded cask provides component shielding and confinement during the removal and transfer of CFF cartridges from the Process Vessel Cells, across the Operating Deck, and down into the

Material Staging and Storage Area. The cask is adequately shielded to minimize radiological exposure to the Operators on the Operating Deck, and its bottom opening can be closed and sealed to prevent the spread of contamination. Figure 2-6 presents a simplified sketch of removal of the CFF into the cask.

To remove a CFF, the Operating Deck bridge crane is used to remove the shielded plug over the filter from the Operating Deck floor, install a spool piece, and then position the cask over the opening. The filter cartridge is remotely grappled and lifted up into the cask. The bottom of the cask is then installed and sealed, and the cask is moved over the Operating Deck floor and through a floor opening to the Material Staging and Storage Area below.

#### 2.4.1.8 Operating Deck

At the 139-ft level, the Operating Deck covers the Process Vessel Cells. The Operating Deck floor is constructed with access ports to facilitate the commissioning process. The access ports also facilitate D&D activities.

In addition to the access ports, other penetrations are provided through the Operating Deck. These penetrations allow access to the following:

1. Alpha Sorption Filter and Washing Filter housings in the ASDT and SSRT/WWHT Cells to support filter cartridge insertion and removal,
2. Alpha Sorption Filter Drop Area in the Maintenance Staging and Storage Area to support Alpha Sorption Filter cartridge insertion and removal,
3. Installation of portable CCTV cameras for inspections of the Process Vessel Cells,
4. Instrument penetrations,
5. Valve penetrations, and
6. Pipe penetrations.

Removal of the shielded plugs for the personnel access ports is not anticipated during the facility's operating lifetime.

The Operating Deck bridge crane can be either locally controlled or remotely operated from the CR and other locations. The crane is remotely controlled by a radio frequency control system. The crane also has a color television camera with pan, tilt, and zoom capabilities. The Operating Deck bridge crane meets Type I crane requirements from American Society of Mechanical Engineers (ASME) NOG-1-2002, *Rules for Construction of Overhead and Gantry Cranes*[14].

Pulse Mixer Enclosures and the FVRBE are also located on the Operating Deck. Pulse Mixer Enclosures contain the valves and piping that control the air pulsing and venting of the APA pulse pots in the process tanks. The FVRBE contains the valves and piping that control backpulsing of the CFFs as well as pressure control valves for the PVVS and PMVS headers.

#### 2.4.1.9 Maintenance and Storage Areas

The Maintenance and Storage Area is used for hands-on decontamination or repair/maintenance of equipment. This area, combined with the Material Staging Area, is also located to provide convenient access to the Truck Bay to permit removal of failed equipment or to receive/stage new equipment for installation in the process areas.

A dedicated vertical area of the Process Building, the Filter Drop Area, allows the transfer of items from the Operating Deck to the Maintenance and Storage Area. The Maintenance and Storage Area also contains a Decontamination Area for decontamination of items, a Contactor Rebuild Area for maintenance on the CSSX centrifugal contactors, and a Radioactive Waste Storage Room where radioactive waste is stored to await transport out of the SWPF Process Building.

#### 2.4.1.10 Control Room

Most operations involving waste treatment systems, equipment and support systems, and equipment and monitoring are remotely performed from the CR, using the solid state Distributed Control System (DCS). The DCS includes a server with redundant hard drives and controllers, redundant Ethernet interconnections, and redundant workstations.

The DCS is a generic term that relates to computer-based control systems utilizing multiple processors to execute control functions. The SWPF DCS is comprised of two separate systems, the Basic Process Control System (BPCS) and the Safety Instrumented System (SIS). The SWPF Project uses the SIS for safety-related functions and the BPCS for non-safety functions. The SWPF SIS is implemented in accordance with American National Standards Institute (ANSI)/ Instrumentation, Systems, and Automation Society (ISA) S84.00.01-2004, *Application of Safety Instrumented Systems for the Process Industries*[15].

The BPCS is responsible for normal operation of the plant and, in many instances, is used in the first layer of protection against unsafe conditions. Normally, if the BPCS fails to maintain control, alarms will notify the Operator that intervention is needed to re-establish control within specified limits. If the Operator is unsuccessful, other layers of protection (e.g., passive confinement or SIS interlocks) are in place to bring the process to a “safe state” and mitigate any events.

The SIS is an independent system composed of sensors, signal processing and logic devices, and support systems. The specified functions or safety instrumented functions (SIF) are implemented as part of an overall risk reduction strategy that reduces the risk of potential accident scenarios.

Correct operation of the SIS requires a series of components to function properly. First, the sensors must be capable of detecting abnormal operating conditions, such as high temperature, low vacuum, etc. Second, the logic solver must receive the sensor input signal(s), make appropriate decisions based on the nature of the signal(s), and change its outputs according to defined logic. The logic solver uses electrical, electronic, or programmable electronic equipment such as relays, trip amplifiers, or logic controllers. The change of the logic solver output(s) then

results in the final element(s) (e.g., electrical contactors or shunt trip breakers) taking action to reach its safe state.

The SWPF SIS is designed to be “fail-safe”. A loss of signal or power to any part of the instrumentation, signal processing, or final element interlock devices will result in the final element being placed in its safe position. As an example, any failure in the SIS due to loss of power or signal continuity will cause the associated interlock action to take place (e.g., pump motor trip). The safe state for all final elements (pump motors) is achieved without reliance on support systems (spring-loaded devices are used instead of electric power or compressed air). Because of this fail-safe design, support systems for the SIS (e.g., electric power) are not required to be Safety Significant (SS)/PC-3.

The SIS automatically provides all the SS functionality from detection to execution of the safe state. The SIS monitors the required parameters directly and executes required safety logic sequences completely independent of any operator action or BPCS functions. SIS alarms are displayed on a dedicated annunciator panel independent of the BPCS. The SIS is designed to perform its intended function even if the BPCS is completely disabled.

For the SWPF SIS, only traditional analog (4-20 Milliampere Direct Current) along with Highway Addressable Remote Transducer protocol and discrete input/output are supported. The field transmitters and devices have a Safety Integrity Level equal to or greater than that required for the functionality of the particular SIF.

A maintenance interface for the SIS is provided near an instrument control panel in the IT Server Room. The maintenance interface is used to support testing of the SIS.

The BPCS provides multiple Operator workstations. During normal operation, one or more Operators use the workstations to establish and maintain automatic or manual control of waste treatment processes, ventilation, some mechanical handling operations, and to monitor overall facility status (i.e., environmental, radiation, chemical laboratory, continuous air monitors [CAMs], etc.).

The SWPF CR BPCS permits remote monitoring and control of ASP, CSSX, and AFF operations (startup, routine operations, cleaning operations, and shutdown) and operation of selected support equipment. External and internal SWPF waste transfers can be monitored with the BPCS.

The BPCS displays provide simplified process diagrams depicting real-time indications of major mechanical equipment (pumps, valves, contactors, fans, etc.). Process variables are also displayed on the simplified diagrams.

The BPCS gathers and records data and information necessary to determine process parameters and control facility processes through both manual and automatic control loops. The system includes an archival system. There are also limited interfaces between the SWPF BPCS and the BPCS systems of other SRS facilities.

The BPCS can actuate control and protection interlocks that operate systems or components to maintain process stability and safety during and after a process upset or accident. If it is required to return the interlocked system or component to operation before the initiating condition is corrected, an interlock bypass is provided, utilizing appropriate safeguards (e.g., supervisory passwords).

Workstations with audible and visual alarm indications are provided in the CR and at remote locations in the plant. The CR also has wall-mounted monitors normally used to display alarm status.

#### 2.4.1.11 SSP Room

On the west side of the CPA at the 100-ft elevation is the SSP Room, which houses controls and indications to shut down and monitor the processes, should the main CR become uninhabitable. None of the functions performed in the SSP Room or the controls and indications are safety-related because the processes are designed to passively fail to a safe state during abnormal or upset conditions. This room is accessible only through an exterior door.

The SSP Room includes a BPCS workstation, which can be used to monitor the plant and perform the same functions as BPCS workstations in the CR to place and maintain the facility in a safe shutdown condition. The SIS cannot be directly accessed from the SSP Room, but process instruments that provide input to SIS have the parameter readings passed through to the BPCS, which can be read in the SSP Room.

Typical functions that can be performed from the SSP include:

- Emergency shutdown initiation and monitoring,
- Monitoring of process facilities within the building,
- Monitoring of ventilation for the building,
- Environmental surveillance for the building,
- Public Address communications,
- Limited CCTV surveillance of the facility,
- Telephone communications, including SRS ring-down telephone to the Savannah River Site Operations Center (SRSOC) and means for direct communication with CRs for other Liquid Waste facilities,
- Computerized access to operations and maintenance documentation, and
- Minimum essential monitoring of building radiological and temperature indications.

#### 2.4.1.12 Analytical Laboratory

The Analytical Laboratory is located on the 139-ft elevation against the south wall of the CPA. Access to the Laboratory is provided via stairways located on the eastern and western sides of the facility. From west to east, the Analytical Laboratory is comprised of the Hot Laboratory, Radiochemistry Laboratory, Inorganic Laboratory, and Organic Laboratory, as well as a laboratory count room, storage area, and Laboratory Office area. Within the Hot Laboratory are four Hot Cells within one common shielded enclosure containing a bridge crane and manipulators. The Hot Cells have four drain lines that prevent a spill from sample piping causing an overflow of the stainless steel liner. The Hot Cells also have two storage boxes inset into the liner's floor. Each storage box contains a drain line that connects with one of the floor liner drain lines. On the south side of the Hot Laboratory is a Manipulator Decon and Repair room provided to perform maintenance on manipulators used in the Hot Cells. Within the Radiochemistry Laboratory are nine gloveboxes, one of which can transfer items to/from the Hot Cells, and six radio hoods. Within the Inorganic Laboratory are two gloveboxes and five radio hoods. Within the Organic Laboratory are six radio hoods. A sample transfer system is provided within another glovebox, which connects to other gloveboxes and radiohoods in all the laboratories, to transfer samples between laboratories. A large pass-through in the southeast corner of the Hot Cell provides a means of access for personnel entry to the Hot Cells to perform maintenance when necessary. On the west end of the CPA above the west utility chase is the Laboratory Hot Cell Exhaust Room, which contains the scrubbers and HEPA filters for the Hot Cell and glovebox exhaust system.

Preparation and analyses of radioactive process samples are performed in gloveboxes or Hot Cells located in the Analytical Laboratory. Routine chemical analyses required to support the waste treatment processes are also performed in the Analytical Laboratory.

Sample pigs containing samples from HTF may be received in the Truck Bay. Sample pigs are moved to the Analytical Laboratory, using an appropriate wheeled cart and the Equipment Lift located in the Maintenance and Storage Area.

The Analytical Laboratory has systems and equipment to collect, store, and dispose of regulated hazardous laboratory waste generated by sampling and analysis activities. Laboratory waste is collected and disposed by using certified waste transport and disposal packages or is drained to the Lab Drain Tank (TK-235) or Lab Collection Tanks A/B (TK-236/TK-237) and returned to the appropriate SWPF waste treatment stream.

The Analytical Laboratory is supported by several dedicated utility systems. Argon is provided to the Analytical Laboratory from the Liquid Argon Supply Tank (TK-330) located west of the CCA. A vaporizer located at the tank provides argon gas to a distribution header. Uses of argon in the Analytical Laboratory include a purge to the Hot Cell shielded windows and connections to certain instruments contained in radiohoods or gloveboxes. Helium is provided to the Analytical Laboratory from manifolded cylinders in the Laboratory Bottle Storage Area. A distribution header directs helium from the cylinders to the instruments that require it, located in radiohoods or gloveboxes. Bench top, laboratory-scale gas generators provide hydrogen,

nitrogen, and zero air as needed to the Analytical Laboratory to the instruments that require it, located in radiohoods or gloveboxes. A liquid nitrogen dewar is staged in the Analytical Laboratory to fill smaller dewars. The Analytical Laboratory also uses equipment that requires propane for operation. Propane cylinders are located in cabinets underneath the equipment supplied with propane.

#### 2.4.1.13 Truck Bay

The Truck Bay is located at the northeast corner of the Process Building and provides direct access to the Equipment Corridor and General Maintenance Shops Area for loading materials and equipment. Solid wastes, including low-level waste (LLW), can also be loaded onto trucks for transport to an SRS Treatment, Storage, and Disposal Facility or LLW disposal facility. Sample pigs with waste feed samples from HTF are received in the Truck Bay for analysis performed in the SWPF Analytical Laboratory. The area is sloped toward a trench covered with metal grating to collect rainwater or liquid spills.

#### 2.4.1.14 Exhaust Stack

The PBVS exhaust fan discharge header connects to a steel exhaust stack (291-J) for discharge to the atmosphere. The discharge headers for the PVVS and PMVS connect to the PBVS exhaust fan discharge header upstream of the exhaust stack. The AFF exhaust fan discharge header connects to the stack through a separate penetration.

The exhaust stack is equipped with air velocity and sampling probes. Sample points are provided for monitoring alpha and beta particulate radioactive material, volatile organic compounds (VOCs), and other regulated air pollutants in the stack effluent. Indications of stack effluent flow, temperature, and radioactive particulate levels are displayed in the CR. High airborne radioactive particulate in the effluent indicates potential saturation or breakthrough of an in-service final HEPA filter.

#### 2.4.1.15 Process Building Access and Egress

The normal access and egress point for the Process Building is a recessed covered doorway on the north wall of the FSA at the 100-ft elevation, adjacent to the Truck Bay. The overhead door for the Truck Bay provides an alternate access and egress point on the north side of the building. Alternate egress is provided on the west side of the Truck Bay loading dock. All emergency exits from the Process Building are at the 100-ft elevation.

Four main stairwells provide access to the CPA. They are located at the four corners of the CPA. The stairwells also provide normal and emergency egress from the CPA. The east-west corridor in the north FSA has an exit at the west end. Other internal emergency exit paths are provided within the Process Building to comply with the requirements of the International Building Code-2003 (IBC-2003[16]) and ANSI/National Fire Protection Association (NFPA) 101: *Life Safety Code*[17].

### 2.4.2 AFF Building

#### 2.4.2.1 AFF Process Area Dikes

The AFP process tanks are located within one of three individual diked tank areas. The western dike contains the IST (TK-220), AST-B (TK-221), and associated pumps. The eastern dike contains FFT-B (TK-222), Cleaning Solution Dump Tank-B (CSDT-B) (TK-223), MSTT (TK-224), DSSHT (TK-207), Lab Collection Tanks A/B (TK-236/TK-237), and associated pumps and filters. The dike floor and walls are coated to facilitate decontamination. Each dike is sized to hold at least 110% of the contents of the largest tank in the dike. The Alpha Finishing Drain Tank (AFDT) (TK-228) and Low Level Drain Tank (TK-604) are located in a separate depressed diked area in the southeast corner of the FFT-B/DSSHT diked area.

An elevated platform along the north and south walls of the diked areas and over portions of the diked areas provides access to the process equipment. An overhead crane that spans all of the tank areas provides the capability for removing/replacing process equipment. Because of the very low $^{137}Cs$ concentrations and resulting low gamma radiation levels, the AFP equipment is not shielded and can be repaired or replaced by contact-handled maintenance methods.

**IST and AST-B Dike**

The major components located in the IST/AST-B dike are the IST (TK-220), AST-B (TK-221), and their associated pumps.

**IST (TK-220)**

The IST (TK-220) is constructed of welded stainless steel and has a capacity of approximately 37,500 gallons. Tank wall penetrations include the overflow line to the cell sump and a thermowell. A common suction line for the IST Transfer Pumps (P-220A/B) and the sample pump exits the bottom of the tank.

The DSS effluent from the DSS Coalescer (TK-201) can be aligned to the IST (TK-220). Other liquid addition paths into IST (TK-220) include flush water, the recirculation line for the IST Transfer Pumps (P-220A/B), and a recycle line for the DSSHT Transfer Pumps (P-207A/B). Other penetrations in the IST (TK-220) include the tank sample return flow.

Air is normally supplied to the tank vapor space from the Plant Air System at a rate sufficient to keep the tank at a small fraction of its lower flammability limit. A riser connects the tank vapor space to the AFF Vent Header that permits displacement of radiolytic $H_2$ and other gases into the AFF Ventilation Exhaust System. The AFF Vent Header is described in Subsection 2.9.1.3.

Major components mounted inside the IST (TK-220) are a flush nozzle ring header for internal decontamination and mixing eductors (EDT-220), driven by recirculation flow from the IST Transfer Pumps (P-220A/B). Instrumentation for the IST (TK-220) includes temperature, density, and density-compensated tank level. The external and internal components of the IST (TK-220) are shown in Figure 2-20 and Figure 2-21.

**AST-B (TK-221)**

The AST-B (TK-221) is constructed of welded stainless steel and has a capacity of approximately 37,500 gallons. Tank wall penetrations include the overflow line to the area sump, a thermowell, and the suction lines for AST-B Transfer Pumps (P-221A/B). Discharge from the AST-B Transfer Pumps (P-221A/B) can be aligned to the FFT-B (TK-222) and the DSSHT (TK-207). Two sample lines also penetrate the tank wall. The normal sample line takes samples from slightly above the lower tangent line. The lower sample line removes liquid from the as low as practical in the tank and is used for recovering solvent from the tank heel.

The DSS effluent from the DSS Coalescer (TK-201) can be aligned to the AST-B (TK-221). Air is normally supplied to the tank vapor space from the Plant Air System at a rate sufficient to keep the tank at a small fraction of its lower flammability limit. A riser connects the tank vapor space to the AFF Vent Header that permits displacement of radiolytic $H_2$ and other gases into the AFF Ventilation Exhaust System.

Other liquid addition paths into AST-B (TK-221) include flush water, MST from the MST Storage Tank (TK-311), the discharge of the IST Transfer Pumps (P-220A/B), the discharges from the AFF sump pumps, the AFDT (TK-228), backwash from the Recovered Solvent Bag Filter (FLT-240), tank sample return flow, recycle lines for the Filter Feed/Solids Transfer Pumps (P-222-1A/B/C), and a recycle line for the DSSHT Transfer Pumps (P-207A/B).

Major components mounted inside AST-B (TK-221) are a flush nozzle ring header for internal decontamination and a motor-driven agitator (AGT-221). Instrumentation for the AST-B (TK-221) includes temperature, density, and density-compensated tank level.

A cooling jacket is attached to the sidewall of the AST-B (TK-221). Process chilled water is circulated through this jacket to remove heat from the AST-B (TK-221) contents. The external and internal components of the AST-B (TK-221) are shown in Figure 2-22 and Figure 2-23.

**FFT-B/DSSHT Dike**

The major components located in the FFT-B/DSSHT dike are the FFT-B (TK-222), MSTT (TK-224), CSDT-B (TK-223), Back Pulse Charge Tank-B (TK-233), Lab Collection Tanks A/B (TK-236/TK-237), and DSSHT (TK-207). Pumps located in this diked area are:

- Filter Feed/Solids Transfer Pumps (P-222-1A/B/C),
- Filter Recirculation Pumps (P-222-2A/B/C),
- MST/Sludge Transfer Pumps (P-224), and
- Alpha Finishing Process Loop Drain Pump (P-229).

The AFDT (TK-228) and Low Level Drain Tank (TK-604) are also located in a recessed area in the southeast corner of this room.

**FFT-B (TK-222)**

The FFT-B (TK-222) is constructed of welded stainless steel and has a capacity of approximately 37,500 gallons. Tank penetrations include the overflow line to the area sump, a thermowell, and one suction line for each FFT-B Filter Feed/Solids Transfer Pump (P-222-1A, 222-1B, and 222-1C). Two sample lines also penetrate the tank wall. The normal sample line takes samples from slightly above the lower tangent line. The lower sample line removes liquid from as low as practical in the tank and is used for recovering solvent from the tank heel.

The discharge of the AST-B Transfer Pumps (P-221A/B) is aligned to FFT-B (TK-222) during multi-strike operations. Air is normally supplied to the tank vapor space from the Plant Air System at a rate sufficient to keep the tank at a small fraction of its lower flammability limit. A riser connects the tank vapor space to the AFF Vent Header that permits displacement of radiolytic $H_2$ and other gases into the AFF Ventilation Exhaust System.

Other liquid addition paths into FFT-B (TK-222) include process and flush water, DSS from the DSSHT (TK-207) for flushing, tank sample return flow, the AFP Filter Loop Drain Pump (P-229), and recirculated CSS and MST/sludge from the AFP Alpha Sorption Filters.

Major components mounted inside FFT-B (TK-222) are a flush nozzle ring header for internal decontamination and a motor-driven agitator (AGT-222). Instrumentation for the FFT-B (TK-222) includes temperature, density, and density-compensated tank level.

A cooling jacket is attached to the sidewall of the FFT-B (TK-222). Process chilled water is circulated through this jacket to remove heat from the FFT-B (TK-222) contents. The external and internal components of the FFT-B (TK-222) are shown in Figure 2-24 and Figure 2-25.

**Alpha Sorption Filters**

Three Alpha Sorption Filters (FLT-222 A, B, and C) are located in the DSSHT/FFT-B diked area. The Alpha Sorption Filters are of a shell and tube design that utilizes sintered metal tubes as the filter medium. As the MST/sludge containing the sorbed actinides and $^{90}Sr$ circulates through the tubes and concentrates to approximately 5 weight percent (wt%), filtrate (DSS) collects in filter shell and is sent to the DSSHT (TK-207).

Each filter train incorporates a backpulse tank and flow paths used to backpulse the filter. Backpulsing removes fine solids from the sintered metal pores to restore filtrate flux through the tube walls.

A two-pump configuration, consisting of a feed pump and a filter loop recirculation pump, is employed for each Alpha Sorption Filter sub-system, with the pumps located in the DSSHT/FFT-B diked area. One of the three Filter Feed/Solids Transfer Pumps (P-222-1A/B/C) feeds approximately 60 gpm to its associated filter loop. Flow through the Alpha Sorption Filter loop is provided by a Filter Recirculation Pump (P-222-2 A/B/C). The HX-222A/B/C heat exchangers remove heat added to the system by the transfer and recirculation pumps. A bleed-back flow, equal to the feed flow rate minus the filtrate (DSS) flow rate, is returned to FFT-B

(TK-222). The bleed-back flow rate provides a degree of cooling to the filter loop and prevents excessive thickening of the MST/sludge inside the filter loop.

Following shutdown of a filter loop, the loop piping is gravity drained back into FFT-B (TK-222). A small volume of the loop piping cannot be gravity drained and will be pumped to FFT-B (TK-222) using P-229. After the target solids concentration is reached in FFT-B (TK-222) and all the filter loops are drained, one of the three Feed/Solids Transfer Pumps (P-222-1A, B, or C) is then used to transfer concentrated MST/sludge from the FFT-B (TK-222) to the MSTT (TK-224).

The filtrate production rate will vary as filtration progresses. It is anticipated that, as filtration proceeds, the filtrate flux rate will be high initially, but will decrease as the MST/sludge slurry approaches its target solids concentration. Flow control valves are provided to regulate the filtrate production rate. Additionally, the filtrate flow line is equipped with a turbidity instrument to detect any solids in the filtrate line due to filter breakthrough. During steady-state operations, filtrate is routed to the DSSHT (TK-207). During filter startup operations, particularly with new filter units, high turbidity may be indicated in the filtrate line. Therefore, the capability to recycle filtrate back to FFT-B (TK-222) is provided.

**CSDT-B (TK-223)**

CSDT-B (TK-223) is constructed of welded stainless steel and has a capacity of approximately 1,000 gallons. Filter cleaning chemicals (caustic and acid) are transferred to CSDT-B (TK-223). The filter feed/solids transfer pumps and recirculation pumps are used to circulate the cleaning solution. During recirculation, a small flow is returned to CSDT-B (TK-223) through the bleed-back and filtrate lines. When the filter loops are drained as part of filter cleaning, the Alpha Finishing Process Loop Drain Pump can also be aligned to CSDT-B (TK-223).

Tank wall penetrations include the overflow line to the cell sump, a sample pump suction line, a thermowell, and three lines that act as the suction piping of the Filter Feed/Solids Transfer Pumps (P-222-1A, B, or C). CSDT-B (TK-223) can receive liquids from the shell sides of the Alpha Sorption Filters and Backpulse Tanks, and sample return flow. It can also receive highly concentrated solids streams from FFT-B (TK-221) if a misdirected flow event occurred. DI water can also be transferred to CSDT-A (TK-103).

Air is normally supplied to the tank vapor space from the Plant Air System at a rate sufficient to keep the tank at a small fraction of its lower flammability limit. A riser connects the tank vapor space to the AFF Vent Header that permits displacement of radiolytic $H_2$ and other gases into the AFF Ventilation Exhaust System.

The major component mounted inside CSDT-B (TK-223) is a spray header for internal decontamination. Instrumentation for the CSDT-B (TK-223) includes density and density-compensated tank level and temperature.

**MSTT (TK-224)**

MSTT (TK-224) is constructed of welded stainless steel and has a capacity of approximately 2,010 gallons. Tank penetrations include the discharge of the FFT-B Filter Feed/Solids Transfer Pumps (P-222-1A/B/C), an overflow line to the cell sump, a thermowell, sample pump suction/return lines, and a suction line for the MST/Sludge Transfer Pump (P-224).

The discharge from the MST/Sludge Transfer Pump (P-224) can be aligned to AST-A (TK-101) or SSRT (TK-104). Air is normally supplied to the tank vapor space from the Plant Air System at a rate sufficient to keep the tank at a small fraction of its lower flammability limit. A riser connects the tank vapor space to the AFF Vent Header that permits displacement of radiolytic $H_2$ and other gases into the AFF Ventilation Exhaust System.

Other liquid addition paths into MSTT (TK-224) include flush water and DSS from the DSSHT (TK-207) for flushing that is supplied through the suction line for the MST/Sludge Transfer Pump (P-224).

Major components mounted inside the MSTT (TK-224) are a flush nozzle ring header for internal decontamination and a motor-driven agitator (AGT-224). Instrumentation for the MSTT (TK-224) includes density and density-compensated tank level indication and temperature.

A half-pipe cooling jacket is welded to the bottom head of the MSTT (TK-224). Process chilled water is circulated through this jacket to remove heat from the MSTT (TK-224) contents.

**DSSHT (TK-207)**

The DSSHT (TK-207) is constructed of welded stainless steel and has a capacity of approximately 43,100 gallons. Tank penetrations include the overflow line to the area sump, a thermowell, suction line for DSSHT Transfer Pumps (P-207A/B), and a tank drain valve. Discharge from the DSSHT Transfer Pumps (P-207A/B) can be aligned to the suctions of the Salt Solution Feed Pumps (P-109A/B), the SSFT (TK-109), the IST (TK-220), the AST-B (TK-221), the AFF transfer path flush header, or the DSS transfer path to the SPF or Tank 50 through an underground waste transfer line that ties into the inter-area waste transfer line.

Filtrate from the Alpha Sorption Filters (FLT-222A/B/C) is sent to the DSSHT (TK-207) following a second MST strike and filtration performed in the AFF. Although not a normal flow path alignment, the DSS effluent from the DSS Coalescer (TK-201) can be aligned directly to the DSSHT (TK-207). The contents of the IST (TK-220) and AST-B (TK-221) can also be sent directly to the DSSHT (TK-207). Air is normally supplied to the tank vapor space from the Plant Air System at a rate sufficient to keep the tank at a small fraction of its lower flammability limit. A riser connects the tank vapor space to the AFF Vent Header that permits displacement of radiolytic $H_2$ and other gases into the AFF Ventilation Exhaust System.

Other liquid addition paths into the DSSHT (TK-207) include flush water, the Low Level Drain Tank (TK-604), and the Lab Collection Tanks (TK-236/TK-237). Other non-routine liquid addition paths into the DSSHT (TK-207) include the Drum-off/Decon Area Sump Pump (P-605)

discharge. The suction for the DSSHT Sample Pump (SP-208) shares a tank penetration with the suction line for the transfer pumps and the sample return line penetrates the upper head of the tank. A flush nozzle ring header for decontamination is mounted inside the DSSHT (TK-207), whose instrumentation includes a tank level. Mixing eductors EDT-207 are driven off the discharge of the DSSHT Transfer Pumps (P-207A/B). The external and internal components of the DSSHT (TK-207) are shown in Figure 2-26 and Figure 2-27.

**Lab Collection Tanks-A/B (TK-236 and TK-237)**

The Lab Collection Tanks-A/B (TK-236 and TK-237) are constructed of welded stainless steel and have an approximate capacity of 1,800 gallons each. Tank penetrations include the overflow line to the sump, suction line for the Lab Collection Tank Pump (P-236), and a tank drain valve. Discharge from the Lab Collection Tank Pump (P-236) can be aligned to the DSSHT (TK-207), and the Low Level Drain Tank Transfer Pump (P-604) discharge header.

The Lab Collection Tanks-A/B (TK-236/TK-237) receive flow from the Analytical Laboratory bench sink drain header and blowdown flow from the analytical laboratory scrubbers. The discharge of the Low Level Drain Tank Transfer Pump (P-604) can also be aligned to Lab Collection Tanks-A/B (TK-236/TK-237). Other non-routine liquid addition paths into the tanks include the Drum-off/Decon Area Sump Pump (P-605) discharge. A riser connects the tank vapor space to the AFF Vent Header that permits displacement of gases into the AFF Ventilation Exhaust System.

Other liquid addition paths into Lab Collection Tanks-A/B (TK-236/TK-237) include flush water and a recirculation and sampling line off the discharge of the Lab Collection Tank Pump (P-236). A flush nozzle ring header for decontamination is mounted inside Lab Collection Tanks-A/B (TK-236/TK-237). Instrumentation includes a bubbler and a radar instrument for tank level. Mixing eductors EDT-236 and EDT-237 are driven off the discharge of the Lab Collection Tank Pump (P-236).

**Low Level Drain Tank (TK-604)**

The Low Level Drain Tank (TK-604) is a horizontal cylindrical tank constructed of welded stainless steel and has an approximate capacity of 250 gallons. Tank penetrations include the overflow line to the sump and a suction line for the Low Level Drain Tank Transfer Pump (P-604). Discharge from the Low Level Drain Tank Transfer Pump (P-604) can be aligned to the DSSHT (TK-207), Lab Collection Tanks-A/B (TK-236/TK-237), ASDT (TK-601), the Drum-off Station, and a hose connection in the Process Building Truck Bay.

The Low Level Drain Tank (TK-604) receives flow from drains outside of the main processing areas that could potentially contain low levels of contamination or materials incompatible with SWPF processes. These areas include safety shower drains, drains from the Personnel Decontamination Room, CSSX and ASP P&VG corridor drains, and other miscellaneous drains. A riser connects the tank vapor space to the AFF Vent Header that permits displacement of gases into the AFF Ventilation Exhaust System. Tank instrumentation consists of a level instrument.

**AFDT (TK-228)**

The AFDT (TK-228) is a horizontal cylindrical tank constructed of welded stainless steel and has an approximate capacity of 1,800 gallons. Tank penetrations include the overflow line to the sump and a suction line for the AFDT Transfer Pump (P-228). Discharge from the AFDT Transfer Pump (P-228) can be aligned to the AST-B (TK-221) and Lab Glovebox #9 for sampling.

The AFDT (TK-228) receives drainage from AFF process equipment (e.g., pumps, filter loops, back-pulse tanks). It also receives drainage from the demister for the AFF PVV System. Air is normally supplied to the tank vapor space from the Plant Air System at a rate sufficient to keep the tank at a small fraction of its lower flammability limit. A riser connects the tank vapor space to the AFF Vent Header that permits displacement of gases into the AFF Ventilation Exhaust System.

Other liquid addition paths into the AFDT (TK-228) include flush water. A flush nozzle header for decontamination is mounted inside the AFDT (TK-228). Instrumentation includes tank level instruments. Mixing eductor EDT-228 is driven off the discharge of the AFDT Transfer Pump (P-228).

#### 2.4.2.2 AFF Access and Egress

Normal access and egress for the AFF is provided through a door that opens into the airlock between the CPA South Corridor and the South ASP P&VG. An exterior door on the south wall on the western side of the AFF opens into the AFF personnel access/airlock area. Doors from this area lead into the AFF Electrical Room, AFF Operator Room, the diked process tank areas, and the CCA. An emergency exit is provided on the east wall of the AFF. A rollup door between the AFF and the Mechanical Maintenance Shop allows movement of large objects between the AFF and the Eastern Facility Support Area.

### 2.4.3 Inter-Facility Process Transfer Lines

The LW feed transfer path from HTF goes to the LPPP (Building 511-S) and the WTE, terminating in AST-A (TK-101). A 3-inch stainless steel underground transfer line in a jacket pipe runs between the LPPP and WTE, where the jacket terminates at the WTE exterior wall penetration. A 3-inch transfer line from the SSRT (TK-104) routes MST/sludge through the WTE to the PPT in the LPPP. This line runs from the WTE to the LPPP inside the same jacket as the incoming waste feed to the AST-A (TK-101).

A 3-inch stainless steel transfer line carries the highly concentrated $^{137}$Cs product (i.e., strip effluent) from the SEHT (TK-205) through the WTE. Outside the WTE, this line enters a different jacket to direct the waste through the LPPP to the DWPF. This carbon steel jacket also contains a second 3-inch stainless steel transfer line that is a spare.

DSS from the SWPF is routed directly out of the facility through a 3-inch stainless steel underground transfer line in a carbon steel jacket that exits the AFF and ties into the H-to-Z Interarea Transfer Line. V-ESR-J-00010[11] shows the routing of these waste transfer lines.

### 2.4.4 CCA

The CCA is a steel structure adjacent to the southwest portion of the Central Processing Area. It primarily consists of one large room to house process support equipment including tanks, pumps, and supporting equipment that store and transfer acids, caustics, PW, DI water, MST, CSSX solvent, and solvent components. Empty and full drums are stored in segregated areas in the CCA, with appropriate spill containment pallets or over-packs provided for filled drums, as necessary.

With the exception of the DI Water Storage Tank (TK-312) and Process Water Tank (TK-301), the CCA tanks for caustic, acid, and solvent are segregated within diked areas to contain spills and prevent mixing of dissimilar chemicals. Truck fill connections, hoses, valves, and other chemical handling components are appropriately labeled or color-coded to minimize the potential for mixing incompatible chemicals in the CCA.

The caustic and acid dikes and drum storage area have sumps and sump pumps to collect and transfer leaked or spilled chemicals into the Neutralization Tank (TK-317). The Neutralization Discharge Pump (P-317) recirculates tank contents through an eductor (EDT-317) inside the Neutralization Tank (TK-317) to mix the contents. The Neutralization Tank (TK-317) contents may be transferred back into the process via the ASDT (TK-601), or transferred to alternate locations via a hose connection (e. g., drums, tanker), as permitted.

The Nitric Acid Receipt Tank (TK-304) and Filter Cleaning Acid Feed Tank (TK-106) vent through the roof, while the other tanks vent into the CCA and are passively vented to the atmosphere. AHUs supply conditioned air to the CCA (AHU-008/-009), while a roof-mounted exhaust fan (FAN-003, -004) operates at a flow that is slightly higher than the supply flow to limit exfiltration leakage.

Adjacent to and immediately south of the main chemical storage and handling areas are the Cold Chemicals Receiving Dock, Cold Chemicals Laboratory, CCA Operator Station, CCA AHU Room, and CCA Electrical Room. Emergency eyewash stations are located throughout the CCA. CCA access and egress are provided by an exterior door on the west wall, a door and overhead roll-up door to the Receiving Dock, and an exterior door to the CCA Electrical Room. Personnel can also ingress/egress the CCA through the AFF personnel access/air lock.

### 2.4.5 Diesel Generator Building

The Diesel Generator Building (254-J), located northwest of the Process Building, includes the 480-VAC Standby Diesel Generator (SDG), its fuel oil day tank, and support equipment. The SDG is a package unit contained within a prefabricated container that facilitates installation on a concrete pad at grade elevation. The container houses the diesel engine, generator, control panel, and support systems (e.g., starting, cooling, lubricating oil systems, and a fuel oil day tank). The

SDG has an external double-walled fuel oil tank that, in combination with the day tank, provides sufficient fuel for approximately 4 days of operation at full SDG load. Near the SDG are the SDG switchgear in an outdoor-rated enclosure, a load bank for SDG testing, and a connection point for a portable diesel generator for use when the SDG is not in service.

An above-ground cable tray connects the SDG to the 480-VAC ATSs in the Process Building Electrical Room. Subchapter 2.8.1 provides additional details about the SWPF Electrical Distribution System.

Appropriate components of the SDG and support systems are provided with structures that will contain fuel oil leaks. These structures include the outer wall of the double-walled fuel oil tank, the SDG enclosure, and the cabinet containing the fuel oil transfer pumps and filters.

### 2.4.6 Compressor Building

The Compressor Building (221-4J) is a metal structure that contains three packaged centrifugal air compressors (CMP-501A/B/C) and two packaged Plant Air dryers (DRY-501A/B). Wall openings with louvers and dampers and roof-mounted exhaust fans with dampers are provided. The building has an equipment door and a personnel door near the southwest corner.

Each air compressor has an integral liquid-cooled intercooler and oil cooler, which is provided with cooling water from two packaged units (CCL-501A/B), each with a cooling water pump, liquid-to-air forced-draft heat exchanger, and coolant recirculation piping that supports the intercooler/moisture separator. These units are mounted on an exterior concrete pad east of the Compressor Building. The Plant Air Receiver Tank (TK-501) is mounted on an exterior concrete pad at the northeast corner of the Compressor Building. The building and all components are located at the 100-ft elevation.

### 2.4.7 Transformer Pad

Four main 13.8-kilovolt (kV) to 480-VAC stepdown transformers (252-J) are mounted on a pad north of the Process Building. Two additional main 13.8-kV to 480-VAC stepdown transformers (252-1J) are mounted on a pad south of the AFF.

### 2.4.8 13.8-kV Disconnect Switch Pad

Two safety-significant, PC-3 manual disconnect switches for the two 13.8-kV feeders to SWPF are mounted on a pad north of the Process Building.

### 2.4.9 Chiller Pad

Three pairs of packaged chiller units (CHUs), located on one large concrete slab (285-J) immediately north of the Mechanical Room in the Process Building, serve the PCWS, Process Building AHUs, CCA AHUs, AFF Building AHUs, and CR AHUs. The circulation pumps and expansion tanks for each chilled water system are located in the Mechanical Room.

### 2.4.10 Administration Building

The Administration Building (704-J), located east of the Process Building, houses mostly support personnel such as Document Control and Engineering.

### 2.4.11 Other Structures

#### 2.4.11.1 Detention Basins, Storm Sewers, and Outfalls

The SWPF Detention Basin, south of the Process Building, receives runoff primarily from the area within the SWPF boundary. Contributions to the Detention Basin include runoff from building roof drains, roads, parking lots, and yard areas.

The SWPF Stormwater System operates in compliance with National Pollutant Discharge Elimination System General Stormwater Permit requirements. Figure 2-3 shows the SWPF Detention Basin.

#### 2.4.11.2 Personnel and Vehicle Control

Sidewalks, crosswalks, parking areas, and traffic lanes are established to maintain personnel and vehicular safety. Equipment parking and operating areas are controlled to prevent induction of irritating or toxic fumes into the HVAC system outside air intakes. Crane operating areas are controlled to minimize the potential for personal injury and damage to SSCs in the event of a crane load or boom drop accident.

This page intentionally left blank.

## 2.5 Process Description

### 2.5.1 Overview

The SWPF performs three basic radiochemical process operations. Figure 2-2 is a simplified Process Flow Diagram depicting the major process operations and flow streams. The first process operation is the ASP. The ASP is a batch process that utilizes MST addition, followed by mixing and filtration, to remove selected actinides and $^{90}$Sr. This process also provides an option to perform additional MST strikes on a filtered waste batch to increase actinide and $^{90}$Sr removal. The ASP produces concentrated MST/sludge containing actinides, $^{90}$Sr, and limited amounts of Tank Farm solids, which is sent to the DWPF. It also produces $^{137}$Cs-bearing CSS that is sent to the second process operation, CSSX, or is recycled to AST-A (TK-101) for an additional MST strike.

The second process operation, CSSX, removes $^{137}$Cs from the CSS in a continuous flow process. The CSSX process produces a concentrated $^{137}$Cs stream (strip effluent) that is sent to DWPF and DSS that is ultimately sent to the SPF.

The third process is the AFP, which provides the option of performing an additional MST strike, mixing, and filtration of Cs-depleted CSS exiting the CSSX process. The AFP provides operational flexibility that maximizes SWPF throughput. The AFP produces filtrate (DSS with further reduced actinide and $^{90}$Sr concentrations) that is ultimately transferred to the SPF. This process also produces a concentrated MST/sludge containing actinides and $^{90}$Sr, which is usually sent to the SSRT (TK-104) for washing and subsequent transfer to the DWPF. If the AFP MST sorption capacity is not totally depleted, this MST can be recycled to AST-A (TK-101) for reuse within the ASP.

In the ASP, the soluble actinides and $^{90}$Sr in the waste feed are sorbed onto MST particles in AST-A (TK-101). The resulting slurry containing the MST with sorbed actinides and $^{90}$Sr, including entrained suspended solids (i.e., sludge from the Tank Farm waste tanks), is transferred to FFT-A (TK-102), where it is concentrated by circulating the slurry through CFFs. The concentrated MST/sludge is transferred to the SSRT (TK-104) for washing to reduce the Na concentration and subsequently transferred to the DWPF. The filtrate from the CFFs is the Cs-bearing CSS, which is sent to the CSSX process or returned to the AST-A (TK-101) for an additional MST strike.

In the CSSX process, the solvent used to extract $^{137}$Cs is a four-component mixture nominally composed of a specially engineered extractant (BOBCalixC6) at 0.007M, a modifier (Cs-7SB) at 0.75M, a suppressant (tri-n-octylamine [TOA]) at 0.003M, dissolved in Isopar®L, an isoparaffinic solvent. The CSS (filtrate from the CFFs) is mixed counter-current with the solvent in the Extraction Contactors (EXT-201A-P). The Cs-depleted DSS is transferred through the BDT (TK-206) to the IST (TK-220) or AST-B (TK-221), where it is sampled and sent to the DSSHT (TK-207) for transfer out of the facility or sent through the AFP for further reduction of actinides and $^{90}$Sr.

The Cs-loaded solvent is scrubbed in centrifugal contactors with dilute (0.05M) $HNO_3$ solution to remove soluble salts (e.g., Na and potassium [K]). The Cs-loaded solvent is then stripped of the $^{137}Cs$ by a dilute (0.001M) $HNO_3$ solution in the Stripping Contactors (EXT-203A-P) to generate a dilute acidic solution that contains the concentrated $^{137}Cs$ (i.e., strip effluent). The strip effluent is stored in the SEHT (TK-205) before transfer to the DWPF. The solvent is sent through the Caustic Wash Contactors (EXT-204A/B) to remove impurities and returned to the SHT (TK-202) for reuse in the Extraction Contactors (EXT-201A-P).

If further actinide or $^{90}Sr$ reduction is indicated by waste feed or process batch analysis, the $^{137}Cs$-depleted CSS is sent to the AFF and treated, using the AFP. In AST-B (TK-221), another MST strike and mixing are performed. The MST/slurry in the AST-B (TK-221) is then transferred into FFT-B (TK-222), where it is recirculated through CFFs to produce a concentrated MST/sludge and filtrate that is sent to the DSSHT (TK-207). The concentrated MST/sludge is sent to the MSTT (TK-224), from where it is transferred to the SSRT (TK-104).

### 2.5.2 Alpha Sorption

#### 2.5.2.1 Salt Waste Feed Receipt

In HTF, waste removed from individual LW tanks is blended in macro-batches in LW Tank Farm blend tanks. After each macro-batch has been blended, sampled, and qualified in the LW blend tank, it is transferred to the SWPF Feed Tank for staging.

The feed in the SWPF Feed Tank is required to conform to the SWPF WAC. The Waste Qualification Program provides assurance that the feed to SWPF complies with applicable limits. Feed transfers to the SWPF are performed and monitored in accordance with V-ESR-J-00010[11] and approved waste transfer operating procedures for the HTF, DWPF, and SWPF.

Mini-batches of approximately 23,200 gallons of salt waste are transferred from the SWPF Feed Tank to the SWPF at a nominal rate of 130 gpm. This is the batch size necessary to meet the design throughput requirements, given an overall AST-A (TK-101) cycle time of 21.6 hours. The AST-A (TK-101), FFT-A (TK-102), and Alpha Sorption Filters (FLT-102A/B/C) have been sized to accommodate this batch size and to filter and concentrate the MST/slurry from each Alpha Sorption Tank batch.

AST-A (TK-101) is sized to receive one mini-batch (referred to as a “batch” throughout the remainder of this chapter) from the SWPF Feed Tank. In AST-A (TK-101), chemical adjustment of the waste feed and sorption of the actinides and $^{90}Sr$ onto the MST particles occur. The size of the AST-A (TK-101) is based on:

- Receipt of one feed batch;
- Addition of liquid to adjust the Na concentration from 6.44M $Na^+$ to 5.6M $Na^+$ (liquid sources include wash water, ASDT (TK-601) contents, SAST (TK-127) contents (when $HNO_3$ is used for cross flow filter cleaning), dilute caustic, and PW); and

- Addition of MST.

After accounting for these volume requirements, the working volume of AST-A (TK-101) is set at 28,700 gallons.

#### 2.5.2.2 Salt Waste Feed Adjustment

After the waste transfer into AST-A (TK-101) is stopped and isolated, the waste feed is chemically adjusted from 6.44M $Na^+$ to 5.6M $Na^+$ by adding drains collected in the ASDT (TK-601) and the SAST (TK-127) (if $HNO_3$ is used for filter cleaning), recovered wash water from the sludge washing step and fresh 1.66M sodium hydroxide (NaOH). This dilution is necessary to increase the rate of actinide and $^{90}Sr$ sorption (HLW-PRE-2002-0019: *Alpha Removal/Caustic Side Solvent Extraction Material Balance Calculations with Monosodium Titanate and Sodium Permanganate Alternatives*[18]).

MST is received as a suspension (15 wt%) from the vendor and transferred to the MST Storage Tank (TK-311). The MST Storage Tank (TK-311) is mechanically agitated to keep the MST in suspension. Assuming an MST concentration of 15 wt% in the MST Storage Tank (TK-311), approximately 70 gallons of MST solution are added to AST-A (TK-101) or AST-B (TK-221) to achieve a final MST concentration of 0.4 grams per liter (g/L).

#### 2.5.2.3 Actinide and $^{90}Sr$ Sorption

The waste feed macro-batches prepared for the SWPF are sampled and characterized prior to transfer. The sample results are used to determine the number of MST strikes required, given the operationally established Decontamination Factor values for actinides and $^{90}Sr$. Because transfer of a new batch of waste from the blend tanks to the SWPF Feed Tank may take several days (during which time two or more SWPF feed batches may be processed), there will be a point in time during or after a macro-batch transfer at which the feed tank Sr/actinide concentration near the feed pump suction will change enough to require a transition in SWPF operations from single-strike to multi-strike or from multi-strike to single-strike operation. In order to identify when this transition should be made, AST-A (TK-101) or the SSFT (TK-109) will be sampled periodically.

The MST particles added to AST-A (TK-101) or AST-B (TK-221) selectively sorb soluble actinides and $^{90}Sr$ present in the waste solution. Most of the Sr/actinide sorption occurs shortly after the MST addition. In order to maximize the MST sorption for one MST strike, the mixing/contact duration within the AST-A (TK-101) is 12 hours. When two or more strikes are required, the mixing/contact duration is reduced to six hours for both the AST-A (TK-101) and AST-B (TK-221).

The AST-A (TK-101) slurry is typically no more than 0.1 wt% solids and includes both MST and suspended Tank Farm solids. The AST-A (TK-101) slurry is transferred on a batch basis to FFT-A (TK-102), using one of the two Alpha Sorption Transfer Pumps (P-101A/B).

Sampling and analysis, to verify that actinide/$^{90}$Sr concentrations in the salt solution are within limits, can be performed in either the IST (TK-220) or AST-B (TK-221) for single-strike operation. For multi-strike operation, the AST-B (TK-221) is sampled and analyzed after MST sorption.

The time taken to process a single AST-A (TK-101) batch is estimated to be 21.6 hours, including waste feed and chemical adjustment transfer times, MST sorption time, and the AST-A (TK-101) to FFT-A (TK-102) transfer time. The design filtration cycle time (i.e., time required to concentrate a batch in the FFT-A (TK-102) sufficiently to create the space needed to receive the next batch from AST-A [TK-101]) has been set at 21.6 hours to be consistent with the AST-A (TK-101) cycle time. For multi-strike operations, AST-B (TK-221) becomes the controlling process, with a cycle time approximately the same as the AST-A (TK-101) for single-strike operations.

#### 2.5.2.4 Filtration

The SWPF uses cross-flow filtration to concentrate the MST/slurry to a target concentration of 5 wt% in two separate processes, the ASP and AFP. FFT-A (TK-102) and its associated Alpha Sorption Filters are designed to concentrate the MST slurry received from AST-A (TK-101). The FFT-B (TK-222) and its associated Alpha Sorption Filters are designed to concentrate the MST slurry received from AST-B (TK-221). Both the ASP and AFP are equipped with three 50%-capacity CFFs. One filter in each process remains on standby.

**ASP Filtration**

The FFT-A (TK-102) is sized to hold one batch from AST-A (TK-101), an AST-A (TK-101) to FFT-A line flush, and the MST/slurry from six previously concentrated batches. The volume of one batch transfer from AST-A (TK-101) is approximately 28,700 gallons. The MST/slurry in FFT-A (TK-102) is concentrated by circulating the MST/slurry through two circuits, each containing one Alpha Sorption Filter (FLT-102 A, B, or C). The third filter is normally isolated and maintained in standby.

After receiving each batch from AST-A (TK-101), recirculation of the MST/slurry continues until the FFT-A (TK-102) reaches a target level. The target level for the seventh batch is normally set such that resulting solids concentration is 5 wt%. Once seven batches of concentrated MST/sludge are accumulated in the FFT-A (TK-102), the MST/sludge is transferred from FFT-A (TK-102) to the SSRT (TK-104). If spent $H_2C_2O_4$ from filter cleaning (normally, $HNO_3$ is used to clean filters) is to be added to the MST/sludge in the SSRT (TK-104), the MST/sludge is concentrated an additional amount to provide the volume necessary to accept the spent $H_2C_2O_4$. This results in a concentration of approximately 7 wt% in the MST/sludge that is transferred to the SSRT (TK-104). When processing the waste feed with an entrained solids concentration of 600 milligrams per liter, the volume of the concentrated MST/sludge from each AST-A (TK-101) batch is 400 gallons.

Under steady-state operating conditions, filtrate (CSS) is transferred to the SSFT (TK-109) to await treatment in the CSSX process. During filter startup operations, particularly with new filter units, some solids breakthrough may occur. Therefore, the capability is provided to recycle filtrate back to FFT-A (TK-102).

**AFP Filtration**

FFT-B (TK-222) is sized to hold one batch from AST-B (TK-221), a line flush, and the concentrated MST/slurry from six previous batches. MST/slurry transferred to FFT-B (TK-222) is concentrated to 5 wt% by recirculation through two filter circuits, each containing one Alpha Sorption Filter (FLT-222-A, -B, or -C). The third filter is isolated and maintained on standby. The filtrate is transferred to the DSSHT (TK-207) to be held ready for transfer out of SWPF. As in the ASP, the filtrate flow can be returned to FFT-B (TK-222) during filter startup operations.

Recirculation of the MST/slurry continues until the solids content inside FFT-B (TK-222) reaches a target of 5 wt%. Tank level, combined with the total quantity of filtrate removed, is used to determine when the 5 wt% target is reached. The MST/sludge is collected in the MSTT (TK-224) and subsequently transferred to the SSRT (TK-104) for washing, prior to discharge to the DWPF.

#### 2.5.2.5 CSS Storage

The primary function of the SSFT (TK-109) is to provide a degree of decoupling between the ASP and the CSSX Systems. The SSFT (TK-109) is sized to allow maintaining a minimum working level to permit the CSSX System to continue operation for some period of time, if the ASP System is not operating. A margin between the normal working level and maximum working level is also provided to allow the ASP System to continue to operate for some period of time with the CSSX System out of service. The normal working volume for the SSFT (TK-109) is approximately one-half full. This value has been established to allow the CSSX to operate for 16 hours with the ASP shut down. The maximum working volume of SSFT (TK-109) is 41,400 gallons. This value has been established to allow the ASP to operate for 16 hours with the CSSX process shut down.

One of two Salt Solution Feed Pumps (P-109A/B) is used to transfer CSS from the SSFT (TK-109) to the aqueous inlet of the CSSX Extraction Contactors (EXT-201A-P). These pumps are variable-speed positive-displacement pumps, controlled by the DCS to maintain the desired CSS flow rate. An in-line turbidity monitor is installed downstream of P-109A/B. High turbidity at this process location generates a control room alarm. A further increase in turbidity levels will actuate a safety-related interlock that will trip P-109A/B.

The Salt Solution Feed Pumps can also transfer the SSFT (TK-109) contents back to either AST-A (TK-101) or FFT-A (TK-102) for reprocessing, if necessary.

#### 2.5.2.6 Sludge Washing

During normal operation, the MST/sludge resulting from the concentration of seven batches in FFT-A (TK-102) is transferred to the SSRT (TK-104) for washing. After receiving the MST/sludge in the SSRT (TK-104), washing is initiated.

The MST/sludge is washed with PW to reduce the Na concentration to meet the DWPF feed quality requirements. During the wash cycle, PW is added continuously and the SSRT (TK-104) contents are recirculated through the Washing Filter (FLT-104). The filtrate is collected in the WWHT (TK-105).

The MST/sludge produced by the downstream AFP is also transferred to the SSRT (TK-104) for washing, prior to transfer to the DWPF. The MST/sludge from the AFP can be washed separately in the SSRT (TK-104) or can be combined with ASP MST/sludge in SSRT (TK-104) and washed.

The washed MST/sludge in the SSRT (TK-104) is then pumped to the DWPF PPT, located in the LPPP, by the variable-speed, centrifugal Washing Filter Feed/Sludge Solids Transfer Pump (P-104-1).

#### 2.5.2.7 Sludge Storage

The concentrated MST/sludge from FFT-A (TK-102) is transferred to the SSRT (TK-104) once seven batches have been filtered to the target concentration of 5 wt%. If spent $H_2C_2O_4$ is to be added to the MST/sludge in the SSRT (TK-104), the MST/sludge is concentrated an additional amount to provide the volume necessary to accept the spent $H_2C_2O_4$. This results in a concentration of approximately 7 wt% in the MST/sludge that is transferred to the SSRT (TK-104). The concentrated MST/sludge from FFT-B (TK-222) is transferred to the MSTT (TK-224), and subsequently transferred to SSRT (TK-104) for sludge washing. Once seven waste feed batches (with either one or two MST strikes) have been fully processed, the accumulated MST/sludge in SSRT (TK-104) is washed.

After washing the MST/sludge and verifying the WAC requirements are met, the SSRT is transferred to DWPF at a time selected by DWPF to meet its processing requirements. After transfer, the lines can be flushed and/or vented to facilitate draining.

#### 2.5.2.8 CFF Cleaning

During normal operation, filter flux (filtration rate) will decrease with time. This is due to fouling of the filter pores with suspended and colloidal solids that are present in the feed stream. The fouled filter is taken off-line, isolated, and cleaned to restore normal operation, when backpulsing and/or increasing the transmembrane pressure does not improve the filter flux.

In-place cleaning is performed by sequentially recirculating caustic flush water (0.02M NaOH if cleaning with $H_2C_2O_4$ or 1.0M NaOH if cleaning with $HNO_3$), filter cleaning acid (0.5M $H_2C_2O_4$ or 20 wt% $HNO_3$), and then caustic flush water through the filter loop.

CSDT-A (TK-103) receives cleaning solutions from the cleaning solution supply tanks. Because filter cleaning is considered to be more effective at elevated temperatures, provisions are made for heating the cleaning solution before it is transferred to CSDT-A (TK-103).

The combination of the respective Filter Feed/Solids Transfer Pump (P-102-1 A/B/C) and the corresponding Filter Recirculation Pump (P-102-2 A/B/C) is used to circulate the cleaning solution through the tube side of the filter loop. During recirculation, a small flow is returned to CSDT-A (TK-103) through a bleed-back line. While recirculation of the cleaning solution is in progress, the contents of the backpulse tank are periodically backpulsed into the main circuit. At the conclusion of each cleaning cycle, the spent cleaning solution is transferred to the ASDT (TK-601) or SAST (TK-127), using one of the P-102-1 A/B/C pumps.

If the observed flux during acid cleaning does not meet minimum requirements, the acid cleaning step may be repeated. This additional step requires a fresh batch of filter cleaning acid. If filter flux is not within limits after repeated cleaning, the filter cartridge may be replaced. When the clean filter loop is initially returned to normal service, the filtrate path is aligned back to the FFT-A (TK-102) to prevent actinides and $^{90}$Sr released from the MST by acid cleaning from entering the CSSX process.

The filter cleaning procedure for the Alpha Sorption Filters (FLT-222 A/B/C) in the AFP is similar to the ASP filter cleaning protocol with CSDT-B (TK-223) provided in the AFP. The capacities of these tanks are identical to the corresponding ASP tanks. The filter cleaning chemicals to clean the filters in ASP and AFP are supplied from the same source. The AFP filter cleaning chemicals will also be transferred to the ASDT (TK-601) and the SAST (TK-127) after each step.

### 2.5.3 CSSX

Extraction of the $^{137}$Cs from the waste feed is performed in a series of 16 centrifugal contactors (stages) to achieve the required reduction in $^{137}$Cs concentration in the DSS (P-ESR-J-00001, *Mass Balance Model Summary Description*[19]).

#### 2.5.3.1 $^{137}$Cs Extraction

Solvent flows through the 16 extraction stages of EXT-201A-P, counter-current to the aqueous feed. Each individual stage provides mixing and separation. $^{137}$Cs is transferred from the aqueous phase to the solvent phase. The $^{137}$Cs is stabilized in the solvent by the calixarene molecule in the extractant (BOBCalixC6), specifically engineered to remove $^{137}$Cs in preference to the Na and K cations. The high selectivity (two orders of magnitude for K and four orders of magnitude for Na) is required to achieve the desired Cs removal.

The desired flow rate for CSS feed to EXT-201A-P is set by the Operator. The speed of the operating positive-displacement Salt Solution Feed Pump (P-109A/B) is automatically adjusted (based on actual flow) to achieve this setpoint.

Solvent is fed from the SHT (TK-202) to the organic inlet of the Extraction Contactors (EXT-201A-P) by one of two variable-speed, positive-displacement Solvent Feed Pumps (P-202A/B).

Test data have shown that the Cs extraction process efficiency is optimized by maintaining the aqueous and organic feed at approximately 73°F (ANL-00/30, *Proof-of-Concept Flowsheet Tests for Caustic-Side Solvent Extraction of Cesium from Tank Waste*[20]). The aqueous inlet line to the Extraction Contactors (EXT-201A-P) is routed through one of two heat exchangers (HX-201A/B) supplied by process chilled water to cool the incoming aqueous feed to 73 degrees Fahrenheit (°F) ±5°F. The SHT (TK-202) is cooled to ~ 73°F by chilled water flowing through a cooling jacket around the SHT (TK-202) vessel wall. Cooling jackets are also provided on the exteriors of the Extraction Contactors (EXT-201A-P) to maintain the aqueous and solvent fluids at ~ 73°F.

DSS leaves the Extraction Contactors (EXT-201A-P) and is gravity-fed to the DSS Stilling Tank (TK-211). The top of the DSS Stilling Tank (TK-211) containing the lighter organic phase overflows to the SHT (TK-202). The bottom of the DSS Stilling Tank (TK-211) containing the heavier aqueous phase drains to the BDT (TK-206) and is then pumped to the DSS Coalescer (TK-201). The combination of DSS Stilling Tank (TK-211) and DSS Coalescer (TK-201) removes trace amounts of entrained solvent in the aqueous phase. The recovered solvent from the DSS Coalescer (TK-201) overflows to the SHT (TK-202).

The BDT (TK-206) is sized to ensure a $^{137m}$Ba decay factor of 40,000, prior to transfer to the AFP (see Subchapter 2.4.1.6 for a description of how the quadrant design of the tank achieves the required decay time). One of the two positive-displacement, variable-speed BDT Transfer Pumps (P-206A/B) is used to transfer the DSS to the DSS Coalescer (TK-201). An in-line gamma monitor is installed downstream of the P-206A/B pumps. High radiation at this process location causes an automatic realignment of the P-206A/B pump discharge to the SSFT (TK-109). A further increase in radiation levels will actuate a safety-related interlock that will trip the associated P-206A/B pump, as well as the P-109A/B pumps.

During single-strike operations, $^{137}$Cs-depleted DSS (which is continuously produced by CSSX) is routed to the IST (TK-220) first. When the IST (TK-220) is full, the tank is isolated and CSSX output is diverted to AST-B (TK-221). While AST-B (TK-221) is filling, the contents of IST (TK-220) are sampled and analyzed. If the contents meet downstream facility WAC requirements for DSS, the $^{137}$Cs-depleted DSS in the IST (TK-220) is routed to the DSSHT. When the AST-B (TK-221) is full, the tank is isolated and the CSSX output is diverted to the now-empty IST (TK-220). The contents of the AST-B (TK-221) are sampled and analyzed and, if acceptable, are transferred to the DSSHT (TK-207).

During two-strike operations, $^{137}$Cs-depleted CSS from the BDT (TK-206) is continuously fed to the IST (TK-220). When the IST (TK-220) is full, the contents are transferred to AST-B (TK-221) for the last MST strike. The AST-B (TK-221) is sampled after the MST adsorption process to verify that the actinides, $^{90}$Sr, and $^{137}$Cs remaining in the salt solution are within the

downstream facility WAC limits for DSS. In the three-strike option, two MST strikes occur in the AST-A (TK-101), and the last strike is performed in the AST-B (TK-221).

#### 2.5.3.2 Solvent Scrubbing

Following $^{137}Cs$ extraction, the solvent is scrubbed with 0.05M $HNO_3$ to remove soluble salts (e.g., Na, K, aluminum, iron, and mercury) from the solvent stream. Scrubbing the metal ions from the organic prevents the transfer of these ions to the strip solution, thereby reducing the total glass volume produced by DWPF. Contacting the organic stream with the dilute acid also has the effect of neutralizing any caustic carryover from the Extraction Contactors (EXT-201A-P). Neutralization of the caustic carryover is necessary to ensure stable operation of the Stripping Contactors (EXT-203A-P).

Two Scrub Contactors (EXT-202A/B) (scrub stages) are provided. The scrub solution enters the second scrub stage and proceeds counter-current to the solvent that entered the first scrub stage. Scrub solution is provided from the Nitric Acid Scrub Makeup Tank (TK-307) by one of the two Scrub Feed Pumps (P-309A/B).

#### 2.5.3.3 $^{137}Cs$ Stripping

The scrubbed solvent flows to the 16-stage Stripping Contactors (EXT-203A-P), which effectively reverse the action of the Extraction Contactors (EXT-201A-P). In EXT-203A-P, solvent is contacted with a 0.001M $HNO_3$ strip solution in a series of counter-current centrifugal contactors, resulting in the transfer of $^{137}Cs$ to the strip solution. The nitrate ion concentration in the aqueous phase shifts the equilibrium to favor transport of the $^{137}Cs$ cation from the solvent to the aqueous phase.

The strip solution is supplied to the aqueous inlet of the Stripping Contactors (EXT-203A-P) by the variable-speed, positive-displacement Strip Feed Pumps (P-310A/B). The design $^{137}Cs$ Concentration Factor is 15 between the incoming feed solution and the Cs-rich strip effluent.

Strip effluent exiting the Stripping Contactors (EXT-203A-P) is sent to the Strip Effluent Stilling Tank (TK-212) and the Strip Effluent Coalescer (TK-203) to remove trace amounts of entrained solvent in the aqueous phase. The recovered solvent from the stilling tank and the coalescer flows by gravity to the Solvent Drain Tank (TK-208). The Solvent Drain Tank (TK-208) is pumped by the Solvent Drain Tank Pumps (P-208A/B) to the aqueous inlet line to the Extraction Contactors (EXT-201A-P). From there, the recovered solvent is separated from the aqueous phase by the action of EXT-201A-P.

Flow of strip effluent through the Strip Effluent Coalescer (TK-203) is driven by either gravity or by a Strip Effluent Coalescer Feed Pump (P-212A/B). The need for operation of the pumps is determined by monitoring process flows and coalescer differential pressures. After the Strip Effluent Coalescer (TK-203), strip effluent is collected in the Strip Effluent Pump Tank (TK-215), and pumped to the SEHT (TK-205). Downstream of the Strip Effluent Pump Tank (TK-215), on the discharge side of P-215A/B, gamma detection instruments enable the operator to trend the concentration of gamma emitters in the strip effluent.

Test data indicate that the stripping operation works most efficiently at approximately 91°F to 97°F (ANL-00/30[20] and P-RPT-J-00020, *Test Report: Cross-Flow Filter and Caustic-Side Solvent Extraction Integrated Test*[21]). A heat exchanger, HX-217A/B, heats the solvent inlet to the Stripping Contactors (EXT-203A) to between 86°F and 96°F. A heater, HTR-310A/B, heats the aqueous inlet (strip feed) to EXT-203P to the same temperature. The strip contactors have jackets that allow controlling the process fluid temperatures, as required by process operations.

#### 2.5.3.4 Caustic Washing

After leaving the Stripping Contactors (EXT-203A-P), the solvent stream is sent to the Wash Contactors (EXT-204A/B). There, the two-stage caustic wash process removes impurities in the solvent that could interfere with solvent performance. The suppressant and modifier contained in the solvent degrade over time. The suppressant (TOA) forms dioctylamine and the modifier (Cs-7SB) forms a phenolic compound. The caustic wash removes these impurities and restores performance of the solvent. The solvent outlet from the wash stages flows by gravity to the SHT (TK-202).

The Caustic Wash Tank (TK-204) and one of two variable-speed, positive-displacement Caustic Wash Pumps (P-204A/B) supply the caustic wash solution to the wash contactor aqueous inlet.

The caustic wash solution is returned to the Caustic Wash Tank (TK-204). A process instrument provides an indication of the pH of the caustic wash solution via the BPCS. Once the pH reaches a predetermined level, the contents of the Caustic Wash Tank (TK-204) are dumped and replaced with makeup from the Caustic Makeup Tank (TK-303). The spent caustic wash liquid is normally discharged to the DSS Stilling Tank (TK-211), but if it has high Cs activity, it is discharged to the Solvent Drain Tank (TK-208).

#### 2.5.3.5 Contactor Operation

The total holdup volume of each centrifugal contactor is approximately five gallons. Each stage has two process inlets, one for the aqueous phase and one for the solvent phase. There are three outlets, one for each phase and a bottom drain for draining the contactor bowls. A motor with a Variable-Frequency Drive (VFD) drives each contactor. The VFD is automatically controlled by the DCS or manually controlled by the Operator. Instrumentation requirements for the contactors include speed, motor amperage, vibration, and bearing temperature.

In addition to the two process inlets, each contactor is provided with a flush connection for washdown of the contactor internals. Flush connections are supplied with chemical flushing solutions (e.g., caustic or $HNO_3$) by the Flush Water System. Both the organic and aqueous outlet ports are vented to the PVVS.

#### 2.5.3.6 CSSX Shutdown/Startup

To perform a routine shut down the CSSX System, the contents of the Solvent Drain Tank (TK-208) are first processed by pumping its contents to the aqueous inlet of the extraction contactors to ensure the Solvent Drain Tank (TK-208) has adequate space available to receive the full

volume of aqueous and organic contained in the contactors and piping if subsequent draining is performed. The CSS flow is reduced. The extraction stage aqueous flow inlet is then switched from CSS to DSS and flow is increased. After operating with DSS feed for a duration sufficient to reduce Cs in the aqueous and organic phases, the aqueous feeds are stopped in the following order: the salt solution feed, the scrub solution feed, and the caustic wash feed. The solvent flow and then the aqueous strip feed flow are then stopped.

After CSSX shutdown for contactor maintenance or any other reason, the CSSX System is started up with DSS supplying the aqueous inlet to the Extraction Contactors (EXT-201A-P). Startup is initiated by first starting all contactor motors and placing the cooling system in automatic temperature control mode. Strip solution, scrub solution, wash solution and DSS supply are intitiated to the appropriate sets of contactors in a pre-determined sequence. When the strip effluent and extraction stage aqueous raffinate begin to flow to the respective solvent recovery equipment, the organic (solvent) flow is started at a low flow rate. When the contactor bank is full of solvent, both the organic and DSS flow rates are increased to the required values. After stable operation in the extraction circuit is achieved with DSS feed, the extraction stage feed is switched from DSS to CSS from the SSFT (TK-109).The system startup and shutdown operations are described in more detail in P-SYD-J-00001, *SWPF Sequence of Operations*[22].

#### 2.5.3.7 Solvent Recovery and Recycle

For initial system startup, fresh solvent is transferred to the SHT (TK-202) to fill the organic portion of the CSSX System. The SHT (TK-202) also provides a working reservoir for solvent recycling and reuse. The Solvent Feed Pumps (P-202A/B) supply solvent to the organic inlet to the Extraction Contactors (EXT-201A-P). Once the contactors have aqueous flow in them, the solvent is circulated through the extraction, scrub, strip, and wash stages. The solvent exiting the wash stages is returned to the SHT (TK-202).

The SHT (TK-202) has been sized to provide a working volume of 500 gallons, which is sufficient to refill the system (assuming all solvent has been drained to the Solvent Drain Tank [TK-208]) and maintain adequate head to the Solvent Feed Pumps (P-202A/B). The SHT (TK-202) has a mixing eductor driven by the discharge flow of P-202A or B. A cooling jacket, cooled by process chilled water flow and controlled by a Temperature Indication Controller (TIC), maintains solvent in the tank at approximately 73°F.

The SHT (TK-202) is sampled on a regular basis. Solvent composition is adjusted (as required) and fresh solvent or solvent components (e.g., Isopar) added to make up for losses. Because of the high cost for solvent replenishment and waste compatibility issues in downstream facilities, the design includes stilling tanks and coalescers to recover solvent from the DSS and strip effluent waste streams. The stilling tanks and coalescers recover most of the entrained solvent in these aqueous streams. Solvent collected from the DSS Stilling Tank (TK-211) and DSS Coalescer (TK-201) drains by gravity to the SHT (TK-202), whereas the solvent collected from the Strip Effluent Stilling Tank (TK-212) and Strip Effluent Coalescer (TK-203) drains to the Solvent Drain Tank (TK-208).

#### 2.5.3.8 DSS Storage

The DSSHT (TK-207) is sized to store DSS generated by 24 hours of operation at design capacity. The DSSHT (TK-207) has been slightly oversized to provide a maximum working volume of 36,000 gallons (approximately 26 hours of DSS production).

One of the two DSSHT Transfer Pumps (P-207A/B) is used to transfer DSS to the downstream facility. The transfer pumps are also used to recirculate DSS to provide adequate mixing. An alternate discharge path is also provided for returning out-of-specification DSS back to the SSFT (TK-109), IST (TK-220), or AST-B (TK-221).

#### 2.5.3.9 Strip Effluent Storage

The SEHT (TK-205) collects the strip effluent for delivery to the DWPF. The SEHT (TK-205) has a working volume sufficient to store seven days of strip effluent production when operating at design capacity. During normal operation, the contents of the SEHT (TK-205) are transferred to DWPF periodically on a schedule to fit within the DWPF operating cycle.

The $^{137}$Cs concentration in the SEHT (TK-205) is approximately 15 times higher than CSS feed. The concentration of $^{137}$Cs in the SEHT (TK-205) generates sufficient heat to require tank cooling; therefore, the SEHT (TK-205) is cooled by process chilled water circulated through cooling jackets around the tank wall(s).

The concentration of Cs-137 in the SEHT (TK-205) can be determined by direct sampling of the tank, or by measuring the area radiation levels in the P&VG labyrinth containing P-205A/B during recirculation of the tank contents. A pair of redundant area radiation detectors are located in the P-205A/B labyrinth for this purpose.

The SEHT (TK-205) is recirculated (as required) to equalize temperature and allow for representative samples prior to transfer. One of two Strip Effluent Transfer Pumps (P-205A/B) is used for recirculation or transfer to DWPF.

Excessive solvent carryover into the strip effluent stream poses concerns in the operation of DWPF. In addition to the solvent recovery components (i.e., stilling tank and coalescer) designed to minimize the solvent in the strip effluent stream, the facility design allows for remediation of the contents of the SEHT (TK-205) by recirculating them through the strip contactors and solvent recovery components via the SEHT sample pump (SP-205). This is a non-routine operation and cannot occur concurrent with normal CSSX processing.

### 2.5.4 AFP

Similar to the ASP, the MST sorption process is used in the AFP to remove selected actinides and $^{90}$Sr, the results are filtered and concentrated, and the concentrated MST/sludge is transferred to the SSRT (TK-104) for sludge washing. The DSS is directed to DSSHT (TK-207) for subsequent transfer out of SWPF.

The configuration and sequence of AFP operation is similar to ASP. However, as the Cs concentration is significantly lower than that in ASP, the AFP equipment is located in the AFF, which is designed as a contact-handled area.

#### 2.5.4.1 Receipt and Storage of DSS

During single-strike operations, the DSS in the BDT (TK-206) is pumped via the DSS Coalescer (TK-201) to the IST (TK-220) or AST-B (TK-221) for sampling and analyzing. After confirming that the tank contents meet the downstream facility WAC requirements, the DSS is sent to the DSSHT (TK-207), which then stores the DSS product until the tank contents are transferred out of the facility.

During two-strike operations, the BDT (TK-206) is pumped to the IST (TK-220) and then transferred to AST-B (TK-221), where the next MST strike is performed. After the MST sorption period has been completed, AST-B (TK-221) is sampled and analyzed to verify that the Sr/actinides in solution meet the downstream facility WAC limits. If the WAC limits are satisfied, the filtrate from the FFT-B filtration circuit is routed to the DSSHT (TK-207).

#### 2.5.4.2 Actinide and $^{90}$Sr Sorption in AST-B (TK-221)

Following completion of a batch transfer from the IST (TK-220) to AST-B (TK-221), MST at nominally 15 wt% is added to achieve a concentration of 0.4 g/L. The contents are mixed with a mechanical agitator (AGT-221).

#### 2.5.4.3 Transfer MST/Slurry to FFT-B (TK-222)

The AST-B (TK-221) contents are transferred to FFT-B (TK-222), using one of the two AST-B Transfer Pumps (P-221A/B).

AFP filtration was previously discussed in Subchapter 2.5.2.4. Similar to the ASP, the FFT-B (TK-222) contents are circulated through two of the three CFFs to concentrate the MST solids to 5 wt%. A mechanical agitator (AGT-222) is used to mix the MST with the $^{137}$Cs-depleted CSS in FFT-B (TK-222). The design includes three CFFs, with two filters normally in service and one that is isolated and maintained on standby. The size and configuration of the CFFs and pumping system are identical to the ASP arrangement. The filtrate from these AFP Alpha Sorption Filters is routed to the DSSHT (TK-207) and the concentrated MST/sludge is transferred to the MSTT (TK-224) for interim storage and subsequent transfer to the SSRT (TK-104) for sludge washing.

#### 2.5.4.4 Filter Cleaning

During routine operation, the filter flux will decrease as each FFT-B (TK-222) batch is processed. When the filter flux decreases significantly below the design value, the fouled filter is isolated and cleaned to restore normal operation. The cleaning procedure is essentially the same as the procedure used for cleaning the ASP filters. CSDT-B (TK-223) is provided as a part of the filter cleaning system.

### 2.5.5 Product Transfers from SWPF

All product transfers out of the SWPF are performed in accordance with the EPC Contractor's V-ESR-J-00010[11] and appropriate operating procedures and Technical Safety Requirement controls for the SWPF and the receiving facility.

## 2.6 Confinement Systems

The SWPF design incorporates various SSCs that provide multiple layers of confinement to prevent exposure of workers to radioactive material (i.e., inhalation, ingestion, or direct shine) and to limit the release of radioactive material to the environment. Because none of the unmitigated offsite consequences that were estimated for postulated accident events challenge the offsite Exposure Guideline of 25 Roentgen Equivalent Man, no confinement function is required or credited for the offsite receptor group.

Primary confinement is provided by process piping, tanks, components, and process system boundaries (e.g., process pump seals, valve packing, isolation valves, and instrument leg isolators), and the core piping within jacketed waste transfer lines. Equipment failure or Operator error could result in loss of primary confinement, because the process tanks and some components are vented to the process cells or have overflow lines directed to process cell sumps.

The process cells, diked process areas, and the secondary jacket pipe around the waste transfer line core pipe provide secondary confinement. If process monitoring (e.g., process tank level monitoring or waste transfer mass balances) has not identified leakage from primary confinement, the secondary confinement SSCs are equipped with liquid leak collection/detection or radiation detection systems that alert Operators to the presence of process liquid in the secondary confinement. Design features and procedures are provided to transfer leaked process liquids from a secondary confinement back into a primary confinement SSC.

The CPA process cell areas are lined with stainless steel to a height that will contain 110% of the largest vessel's working volume. The cells are served by sumps that collect fluids for return to a primary confinement system. The sumps in all these areas only have sufficient depth and volume for effective leak detection and sealing of the vessel overflow lines. The P&VGs have sumps for leak collection and detection. The P&VG sumps gravity drain to the ASDT (TK-601) or Solvent Drain Tank (TK-208) in the ASDT Cell. The ASDT Cell provides sufficient volume to confine postulated leakage that may occur in the P&VGs. Because the lined portion of the cell will contain the leaked waste, the capacities of the sump and associated eductors or pumps are not tied to postulated leak rates or vessel volumes and are not credited to mitigate any accident consequences.

The PBVS and PVVS will significantly reduce the radiological consequences of postulated events in the CPA that involve the release of radioactive material by internal deposition in the process cells and PBVS/PVVS exhaust flow paths, and HEPA filtration of the contaminated effluent. The slight negative pressures maintained in the process cells and vessels by these systems will also minimize unfiltered airborne releases from secondary confinement structures. The PVVS directs air through an air treatment train including a cooler, demister, and heater to remove moisture from the air then through HEPA filtration banks. The PVVS discharges into the PBVS exhaust header downstream of the Process Building Exhaust Fans. The AFF ventilation system provides a confinement ventilation function for the AFF similar to the confinement ventilation function that the PBVS provides to the CPA.

The ventilation from the Analytical Laboratory areas in the CPA is exhausted either through the Gloveboxes/Hot Cell or through the radiohoods. These two laboratory exhaust pathways have separate exhaust scrubbers and HEPA filters. Both of the laboratory exhaust pathways enter the PBVS duct between the PBVS exhaust HEPA filters and the Process Building Exhaust Fans. The Process Building Exhaust Fans provide the motive force for flow through the laboratory ventilation system.

The PMVS exhausts the air from the APAs that provide mixing for select vessels in the Process Vessel Cells. The PMVS directs the air through an air treatment train including a cooler, demister, and heater to remove moisture from the air then through HEPA filtration banks. The PMVS discharges into the PBVS exhaust header downstream of the Process Building Exhaust Fans.

The AFF process vessel area consists of diked areas with floors several feet below grade. The floors and dike walls around these areas are coated with a sealing material to a height that will contain 110% of the largest vessel's working volume. These diked areas are served by sumps with stainless steel liners that collect fluids for return to a primary confinement system. The sumps in these areas only have sufficient depth and volume for effective leak detection and sealing of the vessel overflow lines.

## 2.7 Safety Support Systems

### 2.7.1 Fire Detection and Suppression Systems

The SWPF Fire Detection and Suppression Systems include heat and smoke detection devices, local and central fire alarms, automatic sprinklers and deluge systems, and standpipes with hose connections, all fed from a closed-loop, underground fire main. The underground closed-loop fire main is fed by two lines from the S-Area fire water system which includes post-indicator isolation valves and fire hydrants.

Portable fire extinguishers are provided as required by NFPA 10, *Standard for Portable Fire Extinguishers*[23] for facility personnel to fight incipient fires. Manual pull stations are provided at each exit and appropriate horns and strobes are provided throughout the facility, in accordance with NFPA 72, *National Fire Alarm Code*[24]. Heat and smoke detectors, manual pull stations, supervisory switches, and trouble sensing circuits provide input to a dedicated central fire alarm panel with a battery-backed power source. The fire alarm panel reports to the SRSOC as required by F-SPP-G-00003, *Savannah River Site Fire Alarm Specification*[25].

Fire seals are installed for wall penetrations in all designated fire walls. Fire dampers are installed in ventilation systems, where required, to stop air flow to or from the area of a fire.

A fire protection valve room on the east and west sides of the Process Building each feed an associated standpipe riser in the building. The east and west standpipe risers supply a distribution loop within the Process Building from which the individual area sprinkler systems located throughout the building are fed.

The majority of SWPF sprinkler systems are of a wet-pipe design, however there are some exceptions. Sprinklers located in areas where water leakage is likely to have an unacceptable impact on equipment are of a pre-action design (e.g., CR, Northern Facility Support Area Electrical Room, IT Server Room). Sprinklers located in areas where freezing is a concern are of a dry-pipe design (e.g.; CCA Truck Ramp and Receiving Dock). Sprinklers located in areas where the highest radiation fields are normally present, resulting in a short expected lifetime for standard sprinkler heads, are of a deluge design (e.g.; North ASP Labyrinths 3, 4 & 5, CSSX Labyrinth 2).

The SWPF Fire Detection and Suppression Systems are designed, constructed, tested, and maintained in accordance with the requirements of national codes and standards (e.g., NFPA) and DOE Orders.

### 2.7.2 Monitoring Systems

#### 2.7.2.1 General Instrument Design

SWPF instruments and associated circuits or loops are designed to meet the following standard practices for nuclear facilities:

- Direct contact of the sensor with waste is avoided if possible (e.g., instrument wells, isolation diaphragms, or use of radiation or sonic technologies).
- The instrument and associated circuit/loop are environmentally qualified or appropriately shielded or isolated from the hostile environment (e.g., radiation hardened or hermetically sealed).
- Instrumentation used for process control or monitoring is either physically separated from safety-related instrumentation or, if not separated, the control/monitoring and safety-related functions are electrically isolated to prevent interaction between the control/monitoring function and safety-related function.
- Sensors and attached wiring are designed to be remotely serviceable or removable from the hostile environment for repair or replacement.

#### 2.7.2.2 Process Leak Detection and Isolation

Leak detection instruments are installed in the floor sumps of the WTE, Process Vessel Cells, CSSX Tank Cells, ASP and CSSX P&VGs, and AFF Building diked areas. The inter-facility transfer lines and secondary jackets slope away from SWPF, therefore leak detection for the transfer lines is provided at system low points by the interfacing facilities. In SWPF process areas served by leak detection instrumentation, the detector has the minimum function of actuating a CR alarm.

#### 2.7.2.3 CSS Turbidity/Opacity

Degradation or breach of the Alpha Sorption Filter media would allow actinides and $^{90}$Sr to enter the DSS streams produced in the CSSX process or in the AFP. The increased actinide and $^{90}$Sr concentrations in the DSS would not meet the downstream facilities WAC. Additionally, the presence of the actinides and $^{90}$Sr would increase the source terms for postulated accidents involving releases of CSS or DSS. Degradation or breach of the filters would also allow MST/sludge solids to pass into the contactors, resulting in potential degradation or damage to the contactors.

MST or Tank Farm sludge particles in the filtrate indicate filter breakthrough or failure. The filtrate outlet lines of all CFFs in the ASP and AFP are equipped with turbidity instruments to detect particulate material containing actinides and $^{90}$Sr in the filtrate. On detection of particulate material, an alarm is received in the CR and the filtrate flow is automatically diverted back to the respective Filter Feed Tank. An additional set of turbidity instruments is provided in the CSS supply line from the salt solution feed pumps to the CSSX contactors. If a high turbidity setpoint is reached, the salt solution feed pumps are automatically tripped.

#### 2.7.2.4 DSS Gamma Activity

Degraded performance or component failures in the CSSX extraction process could allow high concentrations of $^{137}$Cs and its daughter, $^{137m}$Ba, in the DSS (e.g., process upsets where CSS passes through the Extraction Contactors (EXT-201A-P) with little or no extraction into the

solvent). The increased concentrations of $^{137}Cs$ and $^{137m}Ba$ in the DSS would not meet downstream facilities WAC. Additionally, their presence in the DSS would increase the source terms for postulated accidents involving releases of DSS and local $^{137}Cs$ gamma radiation dose rates in the AFF.

An in-line gamma radiation detector is installed downstream of the BDT Pumps (P-206A/B). On detection of increased gamma radiation, an alarm is received in the CR and the DSS flow is automatically diverted back to the SSFT (TK-109). If gamma radiation levels continue to increase, a separate interlock at a higher setpoint will stop the associated BDT Pump (P-206A/B) as well as the Salt Solution Feed Pumps (P-109A/B).

#### 2.7.2.5 Airborne Particulate Monitoring (in Ventilation Systems)

The SWPF is provided with a ventilation system that is equipped with monitoring components for detection and quantification of radioactive particulate concentrations within the effluent stream. CAMs are installed at selected common header ducts prior to HEPA filtration units, with sampling points provided upstream at individual locations to isolate source originations in the case of elevated CAM readings.

The stack, which is downstream from HEPA filtration, is also monitored with a CAM, although it is not credited with, nor required for, compliance with environmental regulations. The purpose of the stack CAM is to detect HEPA filter breakthrough or bypass failures.

#### 2.7.2.6 Area Radiation Monitoring

Area radiation monitors (ARMs) stationed throughout the facility monitor area gamma radiation levels and provide indication (local and remote CR audible and visual alarms) to notify personnel/Operators of a high radiation level or ARM failure. The detectors are mounted at locations selected through HP, Engineering, and As Low As Reasonably Achievable evaluations. If required, portable ARMs are used in accordance with the Radiation Protection Program and its implementing procedures.

#### 2.7.2.7 Hazardous Chemical Emissions

The SWPF stack is provided with the capability to install a portable monitor to detect non-radioactive HAZMAT (e.g., VOCs). SWPF is exempted from sampling requirements for toxic air emissions by ESH-EPG-2005-00050, *Exemption Approval: Salt Waste Processing Facility Project, Savannah River Site*[26].

### 2.7.3 Industrial Safety

#### 2.7.3.1 Safety Showers and Eyewash Stations

The Domestic Water System (DWS) supplies ESEWSs in areas where workers may be exposed to HAZMAT (e.g., CCA, CCA Laboratory, P&VG, Truck Bay Dock, Analytical Laboratory, Maintenance and Storage Area, and AFF). To summon assistance, each ESEWS is equipped with

a flow-sensing switch that drives a CR alarm on actuation of the ESEWS. The ESEWSs meet applicable health and safety requirements.

### 2.7.4 Process Safety

#### 2.7.4.1 PVVS

To limit the spread of contamination from the process vessels and prevent buildup of flammable vapors (e.g., radiolytic $H_2$ or solvent vapors) in selected process tanks, the PVVS draws air into the tank through a vent or from the tank level instrument bubblers or purge air supply, through the tank vapor space, and out through the exhaust stack.

The PVVS header exits the process cells and splits to feed two identical air treatment trains. Each train includes a Process Vessel Vent (PVV) Cooler (CCL-401A/B) cooled by process chilled water, a PVV Demister (DMST-401A/B), an electric-powered PVV Heater (HTR-401A/B), a PVV HEPA filter bank consisting of a pre-filter and two series PVV HEPA filters (FLT-401A/B), and a PVV Exhaust Fan (FAN-401A/B). The exhaust fans are provided with backup power from the SDG to maintain air purge of the process vessels after a loss of normal power. The discharge ducts of the fans combine downstream of the fan discharge isolation dampers and merge with the PBVS duct leading to the exhaust stack. A backdraft damper prevents the PBVS exhaust fans from causing reverse flow in the PVVS while PVVS fans are not running.

Each air treatment train has air-operated inlet and outlet isolation dampers that can be automatically positioned by programmed routines in the BPCS. The cooler and demister drains are directed to the Solvent Drain Tank (TK-208). The demister is essential to maintaining radioactive emissions from the processes below levels of regulatory concern. The series HEPA filters in each train provide protection against filter breakthrough failures. The redundant air treatment trains are connected to the redundant exhaust fans by a common line, allowing cross-train filter and fan operation.

Instrumentation on the PVVS header includes dP between the header and the outside air and temperature elements. The output of the dP indicating controller controls the VFDs for the PVVS fans to maintain the tank vapor space at a lower pressure than the process cell. An actuated valve located in the FVRBE is designed to allow air from the FFT-A cell into the PVVS header, bypassing the process vessels. This valve is normally set to a fixed position. A vacuum relief installed in parallel with the actuated valve prevents PVVS from drawing excessive vacuum on the process vessels. Temperature sensors in the PVVS header provide remote indication.

A TIC modulates a TCV to control the flow of process chilled water to the PVV Coolers (CCL-401A/B). Each pre-filter and HEPA filter in a train has a pressure differential transmitter that provides indications of filter loading, breakthrough, or bypass. A CAM downstream of the HEPA filter housings provides indication of breakthrough of the HEPA filters. Exhaust fan differential pressure instrumentation is also provided.

#### 2.7.4.2 Air Dilution System

The Air Dilution System (ADS) is comprised of the Plant Air compressor feed and a backup air supply and associated piping to the vapor space of the process vessels. A check valve in the Plant Air header supply to the ADS is provided to ensure that an upstream failure in the Plant Air System does not cause the ADS backup air supply reservoir(s) to depressurize. The Back-up Air Receivers can be replenished by an installed high-pressure compressor (CMP-504) or through the use of portable equipment.

The ADS provides purge air to each vessel to maintain it below CLFL. The flow rates are based on bulk concentrations in the vapor space. The flow rates have margins provided through conservative inventory assumptions (e.g., radionuclide concentrations), flammable vapor generation assumptions, solvent volume, vapor pressure assumptions, waste temperatures, and vessel level assumptions. Additionally, continuous operation of the bubblers (i.e., level indicators) provides sufficient dilution air for most vessels in the facility. The ADS augments the flammable vapor control provided by the PVVS and other diverse methods of dilution air (e.g., air sparging pulse mixers, connection of portable compressors and blowers, etc.).

For vessels that do not have orifices connecting their vapor space to the cell atmosphere, the ADS supplies sufficient air to maintain flammable vapor concentration below 25% of the CLFL. This is done by either a parallel set of rotameters (e.g., the Solvent Drain Tank [TK-208]) or by increasing the flow requirements through the normal set of rotameters.

Based on the amount of purge air required for each tank, flow-indicating control valves meter purge air into the tanks. The system is designed to maintain design basis purge air flow from the backup air receivers for at least four days prior to needing replenishment.

#### 2.7.4.3 APAs

The AST-A (TK-101), FFT-A (TK-102), SSRT (TK-104), WWHT (TK-105), and SSFT (TK-109) are equipped with an APA System. An APA consists of the pulse pots in the tank and associated air supply and vent piping, valves, air supply pressure control valve, flow-restricting orifice, and a solid-state controller. A typical APA is shown in Figure 2-28. This APA configuration has no moving parts inside the Process Vessel or Cell, which increases APA reliability and minimizes maintenance. An APA mixes the waste and chemicals to enhance process reactions, suspends solids, ensures process sample consistency, and mitigates the accumulation of concentrated heels in the process vessels.

Settled MST and sludge solids may be capable of trapping hydrogen within bubbles that develop within the settled solids. If allowed to accumulate over a long period of time, the sudden release of gas could create conditions favorable to an explosion in a process tank. The APA System continuously operates during process operations. Exceptions include vessel pump-down to low levels or loss of Plant Air. In vessels containing significant quantities of MST and sludge solids, if a loss of power or process upset results in the settling of solids, the APA may be operated periodically as designed or as a sparging device to release trapped gas in the settled solids.

An APA uses compressed air as a motive force, but does not directly introduce air into the vessel. Operation of the APA is based on introducing compressed air into pulse pots and venting the exhaust sequentially at a predetermined frequency. Each cycle of introducing compressed air and venting the pulse pot causes the fluid to be forced out of the pulse pot into the vessel and then drawn back into the pulse pot from the vessel. The PMVS maintains a negative pressure at the pulse pot exhaust to draw the fluid into the pulse pots and maintain proper mixing.

Minimizing the potential for an APA to aerosolize waste by sparging air through the waste requires that the APAs be designed to limit the potential for uncontrolled sparging to occur. In addition to the normal control setpoints of the APA controller, a flow-restricting orifice in the air supply line to each APA limits the maximum air flow during off-normal APA operation (e.g., two pulse pots receiving air simultaneously).

At lower process vessel levels, the APAs are operated in one of two lift and drop modes. In these modes, instead of compressed air being used to force the liquid out of the pulse pot, the pulse pots are sequentially vented to the vessel head space and gravity is the sole motive force pushing the liquid column from the pulse pot into the vessel. PMVS is still relied upon to refill the pulse pots. When tank level is extremely low, the APA operates in a lift and drop mode where only the center pulse pot is used. After tank level increases enough to provide adequate coverage of the perimeter pulse pots, the APA shifts to the other lift and drop mode where all the pulse pots are sequentially used.

#### 2.7.4.4 Alarms and Interlocks

To maintain process efficiency and prevent or mitigate process upsets, component failures, or Operator error, selected systems and components are controlled automatically in response to changing process parameters and conditions. In an automated alarm and control system, the output of one or more sensors in an instrument loop is compared to setpoints that are established to exert normal control over the process, actuate alarms when normal operating parameters limits are exceeded, and actuate or stop components to limit the upset and return the parameter to within the normal operating band.

In general, the setpoints for SWPF alarms and interlocks are established in a hierarchy that allows sufficient time for Operator recognition and response before automatic interlock actuations occur. This prevents relying solely on interlocks to maintain safe operation and minimizes interlock actuations.

Operators respond to alarms by implementing alarm response procedures that specify confirmatory indications or alarms, automatic actions for verification, corrective actions, and probable causes of the alarm condition. Safety-related alarms and interlocks are described and discussed in Chapters 3.0 and 4.0.

#### 2.7.4.5 Facility Communication Systems

Installation and operation of communication systems are governed by V-ESR-J-00013, *SWPF Telecommunications and Controls Datalink System Interface Control Document [ICD-13]*[27].

**Telephone**

Phone service, telephones, and support equipment are provided and maintained by the Site Management and Operating Contractor.

A Selective Signal Telephone directly connects the Emergency Duty Officer (EDO) to the SWPF CR and the SWPF SSP Room. These phones operate over the copper backbone provided as part of the telephone communication system.

Ring-down phones are provided between the SWPF CR and HTF, DWPF, and SPF.

**Cellular Phone System**

Cellular phone hardware is provided to allow coverage for cellular phones within the designated areas of the Process Building (221-J).

**Computer Networks**

The SWPF operates a Local Area Network (LAN) connected to the EPC Contractor's website, which requires fiber optic connections to an outside internet service provider. Provisions to access the SRS intranet from the SWPF are provided using dedicated computers that are not connected to or interfaced with the SWPF LAN.

**Public Address System**

The Public Address System permits group transmission of emergency, advisory, and operational information to SWPF personnel. The SWPF Public Address System includes a Public Address amplifier(s) and speaker(s) to ensure adequate coverage of J-Area. The Public Address System provides visual indication that announcements are in progress in locations where ambient noise levels may prevent personnel from noticing the announcement. The Public Address System also broadcasts the alert tone that precedes selected emergency announcements.

**Radio Communications**

A Very High Frequency (VHF) trunked radio is provided in the SWPF CR as a backup to the phone system. The VHF radio is compatible with the SRS site-wide System.

The potential for radio frequency interference with the operation of process equipment is considered in the selection of radio equipment.

**Fire Alarm**

An NFPA-compliant fire alarm system provides autodial notification to the EDO in the SRSOC. Dial-up fire alarm notification is via two telephone lines installed as part of the telephone system.

This page intentionally left blank.

## 2.8 Utility Distribution Systems

### 2.8.1 Electrical

**Electrical Power System**

No SSC that is credited with preventing or mitigating postulated accidents for either the co-located worker or the public requires electrical power to perform its safety function(s). Therefore, none of the electrical distribution system is designated SS for the purpose of maintaining equipment energized. Several safety interlocks are credited with stopping key pumps and manual disconnects are credited with the ability to interrupt the external power supply to the entire facility. The electrical distribution components necessary to perform this safety function are designated SS (e.g., safety shutdown contactors, shunt trip breakers, 13.8-kV manual disconnects).

For general safety and reliability, the SWPF Electrical Distribution System is designed and constructed in accordance with the applicable requirements of NFPA 70, *2005 National Electrical Code*[28]; ANSI/Institute of Electrical and Electronics Engineers (IEEE) Standard C2-2002, *National Electric Safety Code*®[29]; IEEE; and SRS Engineering Standards.

**Electrical Power Source**

The SRS grid is a system of substations and 115-kV transmission lines, coordinated to form a reliable electrical power system for various SRS facilities. Normal electrical power for the SWPF is supplied from Substation 251-H via two separate 13.8-kV feeder lines.

The possibility of power failures or prolonged power outages due to faults in the grid is minimized by the following:

- Medium (13.8-kV) voltage power is provided from the SRS grid by two separate transmission networks;
- The 115-kV substations and transmission lines are connected to form an SRS-wide loop system;
- Switching facilities at 115-kV and 13.8-kV substations permit sectionalizing of transmission lines;
- With equipment and circuits in service, the grid can sustain the loss of a substation transformer, a 115-kV line, or a 115-kV line section without causing a serious overload or interruption of essential service; and
- The 115-kV grid is protected from lightning by static and ground wires and lightning arresters.

**Normal SWPF Power**

The SWPF electrical power system is designed to provide power from separate 13.8-kV feeders to two 13.8-kV switchgear within SWPF. The two 13.8-kV feeders each have an individual manual disconnect switch located on a concrete pad north of the Process Building. 13.8-kV Switchgear SW-101 feeds 13.8-kV/480-VAC transformers XFMR-101, -103 and -107 (part of Unitized Substation STA-201). The 13.8-kV Switchgear SW-102 feeds 13.8-kV/480-VAC transformers XFMR-102, -104, -108, and -106 (part of STA-201). Transformers XFMR-101, -102, -103, and -104 each feed a 480-VAC switchgear located in the FSA Electrical Room and each of these 480-VAC switchgear provides power to the MCCs located in the same room. Transformer XFMR-108 provides power to the SWPF Administration Building. Transformers XFMR-106 and -107 feed Unitized Substation STA-201, which provides power to the MCCs located in the AFF Electrical Room.

The electrical power supplies for the redundant components are split between parallel switchgear assemblies and MCCs. All plant systems and subsystems can continue to operate if either of the 13.8-kV feeders or 13.8-kV switchgear loses power.

The two 13.8-kV switchgear assemblies can be cross-connected by Kirk-Key™ interlocked fusible switches to provide full power to all 13.8-kV/480-VAC transformers and all downstream 480-VAC switchgear. If either of the 13.8-kV switchgear assemblies loses power, the downstream 480-VAC switchgear assemblies can also be cross-connected by cross-tie breakers (also coordinated and interlocked) between 480-VAC Switchgear SWGR-201 and SWGR-202, between 480-VAC Switchgear SWGR-203 and SWGR-204, and between the two 480-VAC busses within the unitized double-ended substation STA-201.

**Standby Power Supply**

When normal power is lost, an under-voltage sensing relay at the affected ATS sends a start signal to the SDG. The affected ATS then aligns the downstream MCC(s) to the SDG after it starts and achieves rated speed and voltage. Power is then provided by the SDG to MCC-203 or -204 through the SDG Switchgear SWGR-205 and its feed to the affected ATS. Certain electrical loads are placed on the SDG when MCC-203 and -204 are energized (e.g., UPS, lighting panels). The DCS will automatically restart selected loads after the SDG is available (e.g., ventilation, PVVS). The other items that can be powered by the SDG will run only if operator action is taken to start them.

The combined volumes of the fuel oil day tank and fuel storage tank are sufficient for at least four days of continuous operation at full design load. A connection point is provided on SWGR-205 to connect a portable diesel generator, if required.

The loads fed from MCCs served by the SDG include all plant equipment that performs and monitors essential process functions. Loads that are provided with standby electrical power include, but are not limited to, the following:

- CR AHU fans, chillers, AHU heater coils, and chilled water circulation pumps,
- Process Building exhaust fans,
- Scrubbers
- PVVS and PMVS fans and heaters,
- Strip Effluent Transfer Pumps,
- Salt Solution Feed Pumps,
- Washing Filter Feed/Sludge Solids Transfer Pump,
- PW Utility Pump,
- Flush Pump,
- ASDT Transfer Pump,
- Emergency lighting, and
- UPS that feeds essential instrument panels.

**UPS**

The UPS uses dual-conversion technology. In this configuration, the 480-VAC input is converted to direct current (DC) by a three-phase rectifier/charger section, whose output is bussed to an inverter section that converts the DC back into a three-phase 208/120-VAC output. During normal operation, a 480-volt direct current battery floats (i.e., is maintained fully charged) on the DC bus between the rectifier/charger and inverter sections. The UPS utilizes solid-state programmable controls that monitor UPS performance and respond to variations of input voltages and frequency to maintain the constant output voltage and frequency required by sensitive instruments, control circuits, and other essential UPS loads.

Upon loss of normal alternating current input power, a bumpless transfer to the UPS battery occurs to maintain power to the UPS inverter/transformer section and the downstream 208/120-VAC loads connected to the instrument panel. The UPS battery is sized to carry the required connected loads for at least 30 minutes.

For UPS failures or degraded performance (e.g., inverter section failure), an internal, normal power-seeking, static bypass switch automatically aligns the 480-VAC bypass source to the output bus of the inverter section. This bypass mode can also be manually initiated to perform maintenance on the UPS internals. Automatic and manual transfers between the normal and bypass power sources occur within one-quarter cycle to maintain uninterrupted power to the UPS loads.

**Electrical System Control and Protection**

Circuits are arranged so that faults, failures, or maintenance on less critical circuits do not jeopardize essential process loads. Protective devices are installed and coordinated to initiate

sequential isolation from the load to the source. Surge protection is included to limit the potential difference across the terminals of the protected device to below the basic insulation level of the device.

#### 2.8.1.1 Grounding and Lightning Protection System

The passive Grounding and Lightning Protection System limits personnel injuries and equipment damage caused by ground faults, static electricity discharges, and lightning strikes. The system provides adequate grounding for plant equipment and a separate, single-point connection to earth for the computer/DCS system. In compliance with the applicable code or standard, the Grounding and Lightning Protection System also protects outdoor electrical transmission lines, transformers, above-ground bus ducts, cable trays, and other SSCs (e.g., fences and exterior stairways/handrails).

The SWPF is provided with a conventional "Franklin-type" air terminal and down-conductor lightning protection system, in accordance with NFPA 780, *Standard for the Installation of Lightning Protection Systems*[30]. This supplemental lightning protection system is installed on, or provides coverage for, the following structures:

- Process Building,
- Administration Building,
- Compressor Building,
- SDG Enclosure and Fuel Oil Tank,
- Chiller Area,
- Outdoor Transformers,
- Ventilation Stack, and
- AFF.

### 2.8.2 Plant Air and Instrument Air

Three Plant Air rotary centrifugal-type compressors (CMP-501A/B/C) with direct-drive electric motors supply facility components that require compressed air. Two of the three compressors can supply the full system load. An integral liquid-cooled intercooler and oil cooler supports each compressor.

Two 100%-capacity Plant Air dryers (DRY-501A/B) feed a common 3,500-gallon Plant Air receiver (TK-501) that supplies air to the Plant Air header. The Plant Air dryers consist of desiccant air dryers, liquid-cooled heat exchanger, moisture separator, and after filters. One air dryer is normally in operation with the other on standby.

Branches from the Plant Air header on the Operating Deck supply compressed air to the level instrument dip tubes for the process tanks and process cell sumps. The Plant Air System also

provides dilution air to each of the process vessels as part of the ADS. For a potential long-term Plant Air interruption, appropriate connection points, regulators, flow indicating controllers, and valves in the Plant Air piping to the dip tubes allow Operators to manually connect an engine-powered, portable air compressor to supply the dip tubes and re-establish level monitoring.

Other uses of Plant Air include operation of ROVs and HVAC dampers, and APAs.

### 2.8.3 Water Systems

#### 2.8.3.1 DWS

Domestic water is supplied to the SWPF Process Building, AFF, CCA, and Administration Building from the SRS Site-wide DWS. Normal loads on the DWS are drinking fountains, sinks, showers, toilets, hose bibbs, and water heaters. The domestic water header also provides makeup to the Process Water Tank (TK-301) and the DI Water System. In areas of the facility where exposure to HAZMAT may occur, safety shower/eyewash stations supplied by the DWS are installed.

#### 2.8.3.2 Process Building Flush Water System

This system includes a distribution header for flushing SSCs with PW, dilute NaOH, or $HNO_3$:

Uses for the flush fluids include, but are not limited to:

- CFF loop neutralization after acid cleaning,
- Equipment wet lay-up,
- Pre-maintenance flush to dilute waste and de-inventory equipment,
- PW and NaOH decontamination, removal of residues, and
- Post-use flush of internal transfer lines.

#### 2.8.3.3 DI Water System

A packaged DI water system produces purified water for cold chemicals makeup tanks serving the CSSX and the filter cleaning systems. DI water is also supplied to the Analytical Laboratory. The DI unit is supplied by the DWS to produce sufficient DI water to exceed demands. The DI unit effluent feeds the DI Water Storage Tank (TK-312). This tank is sized with a working volume of 6,000 gallons to supply CSSX System demands for approximately one day under worst-case conditions with the DI supply skid out of service. DI water supplies the Nitric Acid Scrub Makeup Tank (TK-307), Caustic Makeup Tank (TK-303), CSDT-A (TK-103) and CSDT-B (TK-223), Filter Cleaning Acid Feed Tank (TK-106), and Filter Cleaning Caustic Tank (TK-107).

#### 2.8.3.4 PW System

The PW System is supplied from the Process Water Tank (TK-301), with a maximum working volume of 8,000 gallons. One of two PW Pumps (P-301-1/2) can supply the loads on the PW Distribution Header or the Flush Water Distribution System. The PW header provides makeup to the Compressor Building evaporative coolers (CCL-501A/B), the closed-loop PBVS Heat Recovery System, Process Building and CR Chilled Water Systems, and PCWS.

#### 2.8.3.5 PCWS

The PCWS consists of a single primary loop and two secondary cooling loops. The primary cooling loop circulates an aqueous propylene glycol mixture between the CHUs and the secondary loop coolers. The secondary cooling loops circulate inhibited water between the individual process components requiring cooling and the secondary loop coolers. This configuration reduces the likelihood that leakage from any single point in the system results in either radioactively contaminated liquid entering the FSAs or propylene glycol inadvertently entering process streams.

The primary cooling loop includes two 100% capacity Chillers (CHU-005A/B), two circulating pumps, the ASP Secondary Loop Cooler (HX-015), and the AFP Secondary Loop Cooler (HX-025). A bladder expansion tank supplies NPSH to the supply pumps and maintains the static system pressure within the desired range.

The ASP Secondary Loop includes the ASP Secondary Loop Cooler and two circulating pumps. This equipment is located in North ASP Labyrinth #1. A bladder expansion tank supplies NPSH to the supply pumps and maintains the static system pressure within the desired range. The ASP Secondary Loop services process chilled water heat loads within the Process Building (e.g., process vessel cooling jackets, Salt Solution Feed Cooler, ASP filter recirculation coolers, PMVS vent cooler, and PVVS vent cooler).

The AFP Secondary Loop includes the AFP Secondary Loop Cooler and two circulating pumps. This equipment is located in the southeast corner of the AFF Process Vessel Area. A bladder expansion tank supplies NPSH to the supply pumps and maintains the static system pressure

within the desired range. The AFP Secondary Loop services process chilled water heat loads within the AFF (e.g., process vessel cooling jackets, AFP filter recirculation coolers).

#### 2.8.3.6 Chilled Water Systems

There are two additional closed-loop chilled water systems in the SWPF. The PBVS, CCA Ventilation System, and AFF Ventilation System have a single shared chilled water system to support their AHUs. The chilled water system is configured with two 50%-capacity chillers, two supply pumps circulating an aqueous propylene glycol mixture, an expansion tank, and automatic PW makeup.

The CR AHUs have a dedicated chilled water system. The chilled water system is configured with two 100%-capacity chillers, two supply pumps circulating an aqueous propylene glycol mixture, an expansion tank, and automatic PW makeup.

#### 2.8.3.7 Tempered Water Units

There are two closed-loop tempered water systems in the SWPF that support operation of the CSSX System. The first is the Strip Contactors Tempered Water Heaters (HTR-203A/B) that circulate water through the cooling jackets of the strip contactors at a temperature sufficient to maintain the strip solution in the contactors in the desired temperature range. The Strip Contactors Tempered Water Heat Exchanger (HX-203) is in the circulating water flowpath to provide cooling of the tempered water as needed. Figure 2-29 shows a simplified diagram of the Strip Contactors Tempered Water System.

The second is the Solvent Strip Feed Tempered Water Heaters (HTR-017A/B) that circulate water through Solvent Strip Feed Heat Exchangers (HX-217A/B) at a temperature sufficient to maintain the strip solvent entering the strip contactors in the desired temperature range. Figure 2-30 shows a simplified diagram of the Solvent Strip Feed Tempered Water System.

#### 2.8.3.8 Pump Seal Flush Water Supply

Process pumps with double mechanical seals are typically provided with a Barrier Fluid Tank that provides a reservoir of clean water for the mechanical seal at a pressure above the process pressure of the pump. Because the Barrier Fluid Tank pressure is above the process pressure any leakage past the mechanical seal will be into the process system. This ensures that confinement of radioactive material is maintained at the pump seal, and it also ensures that particulates in solids-bearing process streams are not drawn into the pump seal which would lead to seal degradation.

Seal Flush Water is supplied from the Process Water System via the Pump Seal Makeup Water Supply Pump (P-326). Compressed air is provided to the Barrier Fluid Tanks from a separate distribution system that pressurizes each Barrier Fluid Tank to above process pressure. Each Barrier Fluid Tank has control valves to maintain pressure and level within programmed limits.

This page intentionally left blank.

## 2.9 Auxiliary Systems and Support Facilities

### 2.9.1 HVAC Systems

#### 2.9.1.1 Ventilation Systems in the Process Building

**PVVS Design**

The PVVS ensures that non-negligible airborne releases from non-NPH events are not allowed to exit the CPA without being filtered. The PVVS also maintains the bulk concentration of flammable vapors in the tank vapor spaces below 25% of CLFL. The PVVS also maintains a negative pressure in the vapor spaces of selected process tanks to limit the potential spread of radioactive contamination through the tank overflow lines and orifices.

The PVVS fan is a centrifugal fan with heavy-gauge steel casing located in the PVVS/PMVS Fan Room of the Process Building at elevation 139’-0”. The PVVS fan is used to draw air through the vapor space of the process tanks. The PVVS exhaust fans FAN-401A and FAN-401B create a negative pressure in the PVVS header/duct. Each exhaust fan is rated at approximately 350 standard cubic feet per minute (scfm). Operators are alerted to a loss of flow condition by a loss of vacuum alarm. The dP indicators and Hi dP alarms on the exhaust HEPA filters are SS and are designed to PC-1 criteria. The PVVS components receive electrical power from the Standby Bus MCC.

The ADS also provides small flows of air to each of the process vent vapor spaces. The Plant Air System also supplies additional air into the vapor space of the process tanks via air bubbler level instruments. Each of these air sources exhausts through the PVVS during normal operations.

Contaminated vapors and flammable vapors are ducted to the process vessel vent air treatment system. The incoming air is first cooled by the cooling coils (CCL-401A/B) to lower the dew point of the air (i.e., dehumidify). The cooling coils are provided with chilled water from the PCWS. The cooled air is ducted to a demister (DMST-401A/B) to remove any entrained water droplets. This condensate is drained to the Solvent Drain Tank (TK-208) because it may contain some organics. The remaining contaminated air is then ducted to an electrical heater unit (HTR-401A/B) to raise the temperature of the flowing air mixture to reduce the relative humidity of the air stream.

The treated dry air is fed through a pre-filter to trap any large particles in the air stream before the air stream is passed through two stages of HEPA filtration. The exhaust fans discharge into the Process Building exhaust header, which leads to the facility exhaust stack (STK-001).

Flammable vapors may be present due to radiolysis of water, the vapor pressure of solvent floating on the aqueous surface, or the radiolytic decomposition of solvent. Process cell air is supplied to most process vessels through a capped tank nozzle equipped with a flow orifice. The air flow in each tank is a function of the header vacuum and sizing of the orifice. The system is controlled automatically by the DCS controls, based on the process vessel vent header vacuum of 12-inches water column. To satisfy NFPA requirements to maintain the flammable vapor

concentration in the vessel vapor space to less than or equal to 25% CLFL, the orifice sizing is based on the flammable vapor generation rate within each vessel.

Process vessels expected to contain primarily CSSX solvent (Solvent Drain Tank [TK-208], SHT [TK-202], and Solvent Strip Feed Tank [TK-217]) are not provided with a tank top vent. The DSS Coalescer (TK-201) which is located in a normally occupied space is also not provided with a tank top vent. For these vessels and the Contactor Vent Header, inlet air is supplied to the vapor space only by the ADS purge air supply and level instrument bubblers.

The PVVS normally maintains a vacuum in the following vessels.

| Tank/Equipment Number | Tank/Equipment Function |
|---|---|
| 101 | Alpha Sorption Tank-A (AST-A) |
| 102 | Filter Feed Tank-A (FFT-A) |
| 103 | Cleaning Solution Dump Tank-A (CSDT-A) |
| 104 | Sludge Solids Receipt Tank (SSRT) |
| 105 | Wash Water Hold Tank (WWHT) |
| 109 | Salt Solution Feed Tank (SSFT) |
| 127 | Spent Acid Storage Tank (SAST) |
| 201 | Decontaminated Salt Solution (DSS) Coalescer |
| 202 | Solvent Hold Tank (SHT) |
| 203 | Strip Effluent Coalescer |
| 204 | Caustic Wash |
| 205 | Strip Effluent Hold Tank (SEHT) |
| 206 | Barium (Ba)-137 Decay Tank |
| 208 | Solvent Drain Tank |
| 211 | DSS Stilling Tank |
| 212 | Strip Effluent Stilling Tank |
| 215 | Strip Effluent Pump Tank |
| 217 | Solvent Strip Feed Tank |
| 235 | Lab Drain Tank |
| 601 | Alpha Sorption Drain Tank (ASDT) |
| N/A | Contactor Vent Header |

## PMVS Design

The PMVS is used to provide an exhaust vent for the APAs (i.e., pulse mixers, sometimes referred to individually as a pulse pot). The pulse mixers inside the process vessels are pressurized by air from the Plant Air System to force liquid from the pulse mixers into the process vessel for mixing purposes. The pulse mixers maintain the solids suspended so that they can be transferred to downstream receipt vessels and minimize the solids deposition in the vessel

heel. The pulse mixers are then vented to the PMVS, and liquid re-enters the bottom opening of the pulse mixers from the process vessel. The logic-controlled periodic pressurization and venting of the pulse mixers is accomplished by remotely actuated valves inside of Pulse Mixer Enclosures located on the Operating Deck.

The PMVS evacuation of the pulse mixer allows the tank solution to quickly refill the pulse mixer for the next cycle (i.e., pulse). The PMVS maintains confinement of the Plant Air pulse separate from the process tank headspace. The potentially contaminated air is drawn from the pulse mixers through an air treatment train to a bank of HEPA filters by FAN-402A or FAN-402B. The exhaust fans discharge into the Process Building exhaust header, which leads to the facility exhaust stack (STK-001). The Pulse Mixer Vent fans are equipped with motors designed to provide a constant negative 36-inch water column static pressure in the PMVS header. The flow capacity of each fan is nominally 2,000 scfm. The Process Building PVVS/PMVS Fan Room is used to house the PMVS exhaust fans. Standby electrical power is available to the PMVS fans and heaters.

The PMVS serves the following vessels: AST-A (TK-101), FFT-A (TK-102), SSRT (TK-104), WWHT (TK-105), and SSFT (TK-109). Each air treatment train includes a cooler (CCL-402A/B), demister (DMST-402A/B), and heater (HTR-402A/B). Each filtration train consists of two parallel filter banks (FLT-402A/B and FLT-402C/D), each bank having a pre-filter and two HEPA filters in series. The operation of this treatment system is similar to that described for the PVVS, except that condensed liquid from the vent cooler/demister is routed to the ASDT (TK-601). The dP across both sets of HEPA filters and their associated pre-filters is monitored.

**Control Room Air Handling System Design**

The CR HVAC System has redundant AHUs that operate independently of the Process Building ventilation supply and exhaust. During normal operations, the CR AHUs (AHU-004 and AHU-005) draw in outside air, filter the air, and condition outside air for temperature and humidity prior to supplying it to the CR area. The outside air is mixed with air returned from the CR, prior to the filtration and conditioning stages. AHU-004 and AHU-005 are physically located on the floor level within the Mechanical Room of the Process Building.

The CR area includes the CR, IT Equipment Room, UPS Room, and Shift Supervisor’s Office, with redundant AHUs and CHUs. Under normal conditions, one AHU recirculates air through the CR area, with exfiltration losses made up by outside air drawn into the AHU suction path. Because no Operator actions performed in the CR are required to prevent or mitigate the consequences of postulated accidents, CR habitability is not credited as a control by the hazard analysis. The CR AHU fans, chillers, AHU heater coils, and chilled water circulation pumps system are provided with standby power to increase the availability of the system for non-NPH initiated events.

The CR AHUs are intended to allow for safe occupancy of the CR, in order to permit Operations personnel to remotely control and monitor the SWPF in the event of an emergency. In the event

that smoke or contaminants are present near the intake of the AHUs, the CR HVAC System is placed in recirculation mode by closing the AHU outside dampers. Recirculation mode allows the CR HVAC system to provide cooling and limited heating, as well as air circulation to the CR area. Recirculation mode also provides some filtration capability for the recirculated air.

A dP instrument monitors across the AHU pre-filters and the final filters. Both of the AHUs outside dampers (HCD-4150 and HCD-4151) have actuators to support remote closure in the event that operation in the recirculation mode is required.

**Process Building Ventilation System**

The PBVS maintains a cascading airflow from normally occupied (non-contaminated) areas to potentially contaminated areas (process support areas and process cells). There are four parallel exhaust HEPA filter banks, each bank having a pre-filter and two HEPA filters in series (FLT-001, FLT-002, FLT-003, and FLT-004). The system has two 100%-capacity exhaust fans (FAN-001/002). This is a safety-related system that ensures that non-negligible airborne releases from non-NPH events within the CPA are confined and filtered.

The PBVS design establishes three zones to augment the waste confinement function performed by the process tanks and piping, process cells, and diked process areas by minimizing the spread of airborne radioactive contamination. In addition, the PBVS provides ventilation through the Northern and Eastern FSAs that are unzoned.

HVAC Zone 3 is the final barrier to prevent release of airborne radioactive materials to normally occupied work spaces and the environment. Zone 3 includes all areas within the CPA that are not unzoned or classified as part of Zones 1 or 2, including the Controlled Entry Area, PVVS/PMVS Exhaust Fan Room and PBVS Exhaust Fan Room.

HVAC Zone 2 includes those areas that are ordinarily free of contamination, but have the potential for being contaminated. Zone 2 includes the Operating Deck, Material Staging Area, airlocks, Waste Storage Room, North and South ASP P&VGs, Sample P&VG, CSSX P&VG, Contactor Operating Deck, Contactor Support Floor, Cell Inlet HEPA Filter Rooms, Analytical Laboratory, Drum-off/Decontamination Area, Contactor VFD and Drop Area/Deck, PVVS/PMVS HEPA Filter Room, and PBVS Exhaust HEPA Filter Room. This HVAC zone provides occupation radiation protection for workers in Zone 2 areas and minimizes the spread of airborne radioactive contamination into adjacent Zone 3 areas.

The primary (i.e., Zone 1) confinement zone comprises those areas where the greatest potential exists for high levels of airborne contamination during operations. The SWPF HVAC Zone 1 consists of the Process Vessel Cells, East and West CSSX Tank Cell, and WTE.

Because the PVVS also maintains the process tanks and CSSX contactors at a negative pressure, the PVVS is considered part of the HVAC system that services Zone 1. The PMVS is also part of the Zone 1 HVAC system, based on its function of collecting and treating contaminated air exhausted from the pulse mixers.

To establish and maintain the cascading air flow through the HVAC zones, the Process Building AHUs and Exhaust System are designed and operated to create the requisite dP between the HVAC zones that maintain air flow from clean areas to areas of increasing potential for radioactive contamination.

**Process Building Supply Air**

Supply air to the PBVS is 100% outside air (i.e., no air recirculates within the Process Building). The supply air is delivered to Zone 3 areas and to the Analytical Laboratory in Zone 2 by two of three AHUs (AHU-001, -002, and -003), each rated at 50% of total airflow.

Two AHUs operate during normal operation. The third AHU is isolated for maintenance or maintained in standby in case of failure of one of the operating AHUs.

Each AHU includes a pre-filter, inlet filter, heat recovery coil, chilled water cooling coil, and air supply fan. A flow control damper is located at the AHU discharge duct to keep supply air flow rates constant.

Outside air louvers provide air intake to the AHUs. Two air-cooled chillers provide chilled water to the AHU cooling coils. A temperature element at the AHU discharge duct modulates chilled water flow to the AHU cooling coil. The setpoint for the AHU discharge temperature is intended to be low enough to keep the Zone 1 cell exhaust temperature below 95°F. Heat recovery water pumps are provided to circulate water between heat recovery coils located in the AHUs and in the Process Building Exhaust to heat the cold outside air in winter by utilizing hot exhaust air. In summer, heat recovery water cools the hot outside air by utilizing the cooler exhaust air. The Heat Recovery System operates when outside air temperature is below a low temperature setpoint, or above a high temperature setpoint.

**Zone 3 Air Supply to Zone 2**

AHUs deliver supply air to Zone 3 areas and the Operating Deck (Zone 2) through sheet metal ducts. The Zone 3 air is then transferred to Zone 2 areas via transfer air ducts between Zone 2 and Zone 3.

**Zone 2 Air Supply to Zone 1**

Single-stage HEPA filters in Cell Inlet HEPA Filter Room #1 or #2 filter the air from Zone 2 before it is supplied to the Zone 1 Process Vessel Cells or East/West CSSX Tank Cells. These filters are installed principally to prevent the backflow of contaminants during a reverse air flow from Zone 1 into Zone 2.

Within Zone 2 areas, some air flow cascades from Zone 2 areas with low contamination potential (e.g., the Operating Deck) to Zone 2 areas with higher contamination potential (e.g., P&VGs). Air from the Zone 2 North ASP P&VG is ducted through Cell Inlet HEPA Filter Room #1 directly into the inlet filter plenums for the Zone 1 AST-A and SEHT process cells. Air from the Zone 2 CSSX, Sample, and South ASP P&VGs is ducted through Cell Inlet HEPA Filter Room

#2 directly into the inlet filter plenum for the Zone 1 East/West CSSX Tank Cells. Air from the Zone 2 Contactor Support Floor is ducted through Cell Inlet HEPA Room #2 directly into the inlet filter plenum for the Zone 1 FFT-A Cell. All other air from Zone 2 areas is ducted into the Cell Inlet HEPA Filter Rooms' air space and then drawn through an inlet HEPA filter into a process cell. Manual balancing dampers are provided to regulate this flow.

If high temperature is detected in a process cell outlet (exhaust) duct, the cell inlet damper automatically closes. The cell air inlet ducts are routed high in the cell, above the elevation for the maximum postulated flooding event in the cell. Automatic pressure control dampers at each cell inlet air duct compensate for cell inlet HEPA filter loading to maintain the cells at the appropriate negative pressure. Safety-related dP instruments and alarms for each cell monitor negative pressure inside the cells. A safety-related dP indication and alarm in the P&VG corridors ensures that the Zone 2 P&VG is at a negative pressure.

**Zone 1 Air Exhaust**

Zone 1 air is drawn out of the Process Vessel Cells from cell air outlet ducts. The entrance to the outlet duct is above the elevation for the maximum postulated flooding event in the cell. An automatic control damper is located in each cell outlet duct to control the air flow rate through the cell. Safety-related flow indicators and alarms on each Zone 1 cell exhaust are also provided.

The cell outlet air is then exhausted through a two-stage HEPA filter by a VFD-controlled exhaust fan to the exhaust stack. When failure of the operating exhaust fan is detected, the BPCS will automatically align and start the standby exhaust fan. If an access plug (i.e., camera port or CFF) on top of the cell is opened, the cell exhaust system is designed to provide sufficient velocity across the opening area to prevent significant migration of contamination out of the cell.

**Process Building Exhaust HEPA Filters**

Four parallel HEPA filter assemblies (FLT-001, -002, -003, and -004) are provided in the Process Building exhaust. The HEPA filters are testable, per DOE-STD-3020-2005, *Specification for HEPA Filters used by DOE Contractors*[31]. The filter media have an efficiency of 99.97% at 0.3-micron particle size, based on recommendations contained in DOE-HDBK-1169-2003, *Nuclear Air Cleaning Handbook*[32]. All filters are housed in stainless steel enclosures provided with spray nozzles supplied from the Fire Protection System. Inadvertent wetting of the HEPA filters is prevented by a normally open drain valve between the closed header isolation valve and the closed supply valves to the individual HEPA housing. The HEPAs can be manually sprayed down in the event that there is a fire within the housing. Filters and filter housings are of the bag-in/bag-out design.

Each HEPA filter assembly includes a pre-filter and two HEPA filter elements in series. Each filter assembly is sized for 33% of total exhaust air flow. Three filter assemblies and one exhaust fan are normally in operation and the other exhaust fan and fourth filter assembly are on standby.

To ensure that contaminated air is directed through the HEPAs and to maintain negative pressures in required areas, CPA ductwork from the P&VG inlet ductwork to the cell inlet HEPA

to the outlet penetration from the CPA are safety-related, including other ventilation tie-ins (e.g., PVVS, PMVS, laboratory ventilation) up to the first backdraft damper(s).

The HEPA filters and the HEPA filter housing are safety-related. Safety-related instrumentation includes dP indicators and alarms on the process building exhaust HEPA filters to alert Operators to HEPA pluggage.

**Process Building Exhaust Fans**

Two 100%-capacity safety-related exhaust fans (FAN-001 and -002) and VFD-controlled motors are provided for the Process Building exhaust, with one fan operating and the other in standby. The exhaust fans are centrifugal fans with heavy-gauge steel casing. Automatic dampers at the discharge side of each exhaust fan are provided. Manual dampers at the inlet of each fan are provided for isolation purposes. The exhaust fans are supplied by the Standby Bus MCCs. A common heat recovery coil is provided upstream of the exhaust fans. The recovered heat from the water circulated through the heat recovery coils is transferred from the heat recovery coils in the AHUs to the air supplied to the Process Building.

**Analytical Laboratory Ventilation**

All Analytical Laboratory areas receive conditioned air from the PBVS supply header. Air flow through the offices, Organic Laboratory, Inorganic Laboratory, Radiochemistry Laboratory, and Hot Laboratory are cascaded from less contaminated areas into areas of potentially increased contamination.

The sample lines for process vessels in the CPA are provided in the Hot Cell. Two gloveboxes contain sample lines from the AFF. The Hot Cells and gloveboxes are classified as Zone 1.

The Hot Cells are located in the southwest area of the Laboratory. The gloveboxes, located throughout the Laboratory areas (Radiochemistry, Organic, and Inorganic) exhaust into the Hot Cell. The Hot Cell is exhausted through a redundant set of treatment trains, each composed of an exhaust scrubber (SCB-003, -004), a prefilter, and two HEPA filters (FLT-021, -022) that are functionally classified as safety-related. The scrubbers and filters are located in the Laboratory Hot Cell Exhaust Room, located against the west wall of the CPA and the west side of the Hot Cell on the 139’-0” elevation. The Hot Cell and glovebox areas containing these sample lines could have the potential for pressurized sprays or leaks to occur from the sampling system. The consequences could involve non-negligible inhalation doses to the in-facility worker if the ventilation system is not operating. Exhaust air flow is provided by the Process Building Exhaust fans. Non-credited inlet HEPA filters are provided on the gloveboxes. Upon detection of loss of flow/dP in the Hot Cell/glovebox, sample flow is terminated by an interlock. This prevents the potential for exposure of in-facility personnel to leaks and aerosols that could exist or occur from the sampling devices and associated piping.

The Hot Laboratory Room and radio hoods join into an exhaust header that feeds one of two treatment trains. Each train is composed of a scrubber (SCB-001, -002) a prefilter, and two HEPA filters (FLT-009, -017). The scrubbers and filters are located in the PVVS/PMVS and

Laboratory Vent Room, located north of the Operating Deck on the 139'-0" elevation. Exhaust air flow is provided by the Process Building Exhaust fans.

#### 2.9.1.2 AFF HVAC System

The AFF is provided with an independent once-through HVAC system. A 100%-capacity outside AHU (AHU-006) supplies conditioned air to AHU Room, Personnel Access/Airlock, and Electrical Room, which are the non-zoned and Zone 3 areas of the AFF Building. The AHU also supplies conditioned air directly to the AFF HEPA Filter Room and the AFF Process Vessel Area, which are the Zone 2 areas of the AFF Building. Negative pressure is maintained in the potentially contaminated Zone 2 areas (the process vessel diked areas) to draw air from the Zone 3 areas. Air from the Zone 2 areas is drawn through a HEPA filter (FLT-007) and one of two exhaust fans (FAN-005 and -006) and discharged to the SWPF exhaust stack.

A single HEPA filter assembly (FLT-007) is provided in the AFF exhaust. The HEPA filter assembly includes a pre-filter and two sets of HEPA filter elements in series. The HEPA filters are testable, per DOE-STD-3020-2005[31]. The filter media have an efficiency of 99.97% at 0.3-micron particle size, based on recommendations contained in DOE-HDBK-1169-2003[32]. The filter is housed in a stainless steel enclosure provided with spray nozzles supplied from the Fire Protection System. Inadvertent wetting of the HEPA filters is prevented by a normally open drain valve between the closed header isolation valve and the closed supply valves to the individual HEPA housing. The HEPAs can be manually sprayed down in the event that there is a fire within the housing. Filters and filter housings are of the bag-in/bag-out design.

The AFF Ventilation Exhaust System provides a filtered pathway for airborne radioactive material present within the AFF. The AFF exhaust fans create a negative pressure to draw potentially contaminated air in the AFF process vessel areas that may be released from the AFF process vessels, into the AFF exhaust HEPA filter. The HEPA filter, fan housings, and interconnected ductwork serve to confine the airborne contamination within the filtration and exhaust trains to prevent an unfiltered release from the AFF.

#### 2.9.1.3 AFF Vent Header

The AFF Vent Header is connected to the vapor space of AFF Process Vessels and drain tanks. The AFF Vessel Vent Header passively vents the tank vapor spaces into the building ventilation exhaust duct through a demister, pre-filter, and HEPA filter (FLT-207). Any exhaust gases pass through the AFF exhaust filter (FLT-007) before being released via the stack. In addition to the air dilution provided to the AFF process vessels by the ADS and the vessel level bubblers, the AFF process vessels are also passively ventilated by air exchanges during fill and drain operations. The flow rates required to maintain the vessel below 25% CLFL are extremely low. Because of the redundant means of air dilution and the passive tank ventilation mechanism, none of the air dilution supply systems (i.e., air bubblers or ADS) are credited to preserve the initial conditions (≤25% CLFL) assumed in the time to CLFL calculations.

This arrangement minimizes the potential spread of contamination, prevents the accumulation of flammable vapors in process tank vapor spaces, and maintains emissions below levels of regulatory concern.

#### 2.9.1.4 CCA HVAC System

The CCA is a non-zoned HVAC area. Two 50%-capacity AHU (AHU-008 and -009) are provided. Two 100%-capacity roof-mounted exhaust fans (FAN-003 and -004) are provided; one is operating while the other is in standby. The exhaust fans discharge air directly from the CCA into the exterior atmosphere. A separate roof-mounted exhaust fan is provided for the fume hood in the Cold Chemicals Laboratory.

#### 2.9.1.5 HEPA Testing

HEPA filters are tested in accordance with ANSI/ASME N510-1989, *Testing of Nuclear Air-Treatment Systems*[33]. As part of the procurement process, HEPA filter inserts are production-tested at the manufacturer for efficiency and pressure drop and have individual serial numbers and test certificates/labels for traceability.

Filter efficiency testing by aerosol challenge is performed for each filter bank when the filter elements are installed. This testing verifies that the filter elements are seated properly and have not been damaged after leaving the manufacturer. In addition, safety-related HEPA filters are certified by a DOE-approved filter test facility to verify that each filter is functioning correctly.

### 2.9.2 Cold Chemicals

Chemicals used in the SWPF processes include NaOH, $HNO_3$, MST, and extraction solvent. This subchapter describes receipt, storage, and transfer SSCs for these chemicals.

#### 2.9.2.1 Caustic System

**Caustic Receipt (50% NaOH)**

Tanker trucks deliver 50% NaOH (19M) to the CCA and pump it into the Caustic Receipt Tank (TK-302). The Caustic Receipt Tank (TK-302) provides a working volume of approximately 8,000 gallons. Metered quantities of 50% caustic are provided to the Caustic Makeup Tank (TK-303), Filter Cleaning Caustic Tank (TK-107), Caustic Dilution Feed Tank (TK-108), flush header, and Neutralization Tank (TK-317) by the Caustic Transfer Pump (P-302).

**Caustic Dilution Feed (1.66 M NaOH)**

The Caustic Dilution Feed Tank (TK-108) is used to prepare 1.66M NaOH primarily for chemical adjustment of AST-A (TK-101). The Caustic Dilution Feed Tank (TK-108) has a working volume of approximately 8,000 gallons. Dilute caustic batches are prepared by adding appropriate volumes of 50 wt% caustic and PW to the tank. The final composition of the batch is

verified by in-line density instrumentation. The Caustic Dilution Transfer Pump (P-108) is used to transfer material from the Caustic Dilution Feed Tank (TK-108) to AST-A (TK-101).

**Filter Cleaning Caustic (0.02M - 1.0M NaOH)**

The Filter Cleaning Caustic Tank (TK-107) is used to prepare dilute caustic at approximately 0.02M - 1.0 M for cleaning of the ASP and AFF CFFs. The Filter Cleaning Caustic Tank (TK-107) has a working volume of 850 gallons. Caustic is made up in this tank similar to the method described above for the Caustic Dilution Feed Tank (TK-108), except that a conductivity probe is used to adjust and verify tank caustic concentration and DI water is used for dilution instead of PW. The Filter Cleaning Caustic Tank (TK-107) has an agitator and an in-tank heater to mix and heat the tank contents. The Filter Cleaning Caustic Transfer Pump (P-107) is used to transfer material from the Filter Cleaning Caustic Tank (TK-107) to CSDT-A (TK-103)/CSDT-B (TK-223).

**Caustic Makeup (0.01M – 0.3M NaOH)**

Caustic for the extraction solvent wash process is batched in the Caustic Makeup Tank (TK-303). DI water and concentrated caustic are mixed in the Caustic Makeup Tank (TK-303) to achieve the desired caustic concentration. The solution is transferred from the Caustic Makeup Tank (TK-303) to the Caustic Wash Tank (TK-204) by the Caustic Makeup Transfer Pump (P-303). The Caustic Makeup System can also align filter cleaning caustic or DI water to the Caustic Wash Tank (TK-204) to either provide a source of relatively low concentration caustic or dilute the tank contents.

**Neutralization (25% NaOH)**

The Neutralization Tank (TK-317) has two primary functions: neutralization of waste collected in the CCA sumps and dilution of 50 wt% NaOH for addition to the ASDT (TK-601), SAST (TK-127), SEHT (TK-205) or the Scrubber Caustic Feed System of the Analytical Laboratory HVAC System.

Acid or caustic waste collected in the CCA sumps can be transferred to the Neutralization Tank (TK-317), which has acid and caustic addition lines that allow neutralization of the collected liquid in preparation for disposal or transfer. The neutralized waste can be transferred back to the process through the ASDT (TK-601), or transferred to alternate locations by a hose connection (e. g., drums or tanker).

The Neutralization Tank (TK-317) is also used for the addition of caustic to the ASDT (TK-601), SEHT (TK-205), or SAST (TK-127) for chemical adjustment. Concentrated caustic is transferred to the Neutralization Tank (TK-317) and diluted for transfer to the ASDT (TK-601), SEHT (TK-205), or SAST (TK-127). The diluted caustic is transferred using the Neutralization Tank Discharge Pump (P-317).

The Neutralization Tank (TK-317) can also be used for the addition of chemicals to the Solvent Drain Tank (TK-208) or SSRT (TK-104) for chemical adjustment of their contents.

#### 2.9.2.2 Nitric Acid System

**(20% $HNO_3$)**

Tanker trucks deliver 20 wt% $HNO_3$ (3.5M) to the CCA and pump it into the Nitric Acid Receipt Tank (TK-304). The Nitric Acid Receipt Tank (TK-304) is sized at a working volume of 2,000 gallons. The variable-speed Nitric Acid Metering Pump (P-304-1) transfers concentrated $HNO_3$ to the Nitric Acid Scrub Makeup Tank (TK-307). The Neutralization Metering Pump (P-304-2) transfers concentrated $HNO_3$ to the Neutralization Tank (TK-317), Filter Cleaning Acid Feed Tank (TK-106), and flush header. Undiluted $HNO_3$ can also be transferred to the Solvent Drain Tank (TK-208) by P-304-2.

**Nitric Acid Scrub Makeup (0.05M)**

DI water and concentrated $HNO_3$ are added to Nitric Acid Scrub Makeup Tank (TK-307) to achieve an $HNO_3$ concentration of 3.1 g/L (0.05M). One of two variable-speed, positive-displacement Scrub Feed Pumps (P-309A/B) provide 0.05M $HNO_3$ feed to the aqueous inlet of the Scrub Contactors (EXT-202A/B).

Because the scrub solution is returned to the Extraction Contactors (EXT-201A-P) aqueous inlet (where it combines with the CSS feed), none of the scrub feed is recoverable. The scrub solution usage when the plant is operated at design capacity is approximately 2,060 gallons per day. The Nitric Acid Scrub Makeup Tank (TK-307) is sized to provide scrub solution for approximately one day.

**Nitric Acid Strip (0.001M)**

Dilute $HNO_3$ at 0.001M is provided to the aqueous inlet for the Stripping Contactors (EXT-203A-P) by the combined flow from one of the two Strip Feed Pumps (P-310A/B) and Strip Water Feed Pumps (P-312-3A/B). P-310A/B supply dilute $HNO_3$ from the Nitric Acid Scrub Makeup Tank (TK-307). This flow is diluted to the proper molarity (0.001M) in the strip in-line mixers (MIX-310A/B) by addition of DI water from P-312-3A/B. This strip solution flows counter-current to the extraction solvent and removes the $^{137}Cs$ from the extraction solvent. The aqueous outlet (strip effluent) from the Stripping Contactors (EXT-203A-P) is sent to the SEHT (TK-205) via solvent recovery components.

#### 2.9.2.3 Filter Cleaning Acid

Either $HNO_3$ or $H_2C_2O_4$ is added to the Filter Cleaning Acid Feed Tank (TK-106). This tank is used to prepare an acidic solution to be used in cleaning the CFFs, as described in Subchapter 2.5.2.4. The working volume of the Filter Cleaning Acid Feed Tank (TK-106) is approximately 850 gallons to allow refill of CSDT-A (TK-103) or CSDT-B (TK-223) via Filter Cleaning Acid Transfer Pump (P-106).

#### 2.9.2.4 Solvent Makeup System

The extraction solvent used in the CSSX process is a 4-component mixture primarily of Isopar®L combined with a specialty extractant (BOBCalixC6), a modifier (Cs-7SB), and a suppressant (TOA). Drums of pre-mixed solvent or of Isopar®L are received in the CCA and transferred as needed to the Solvent Makeup Tank (TK-313) that has a working volume of 50 gallons, consistent with the typical shipping drums.

Operating experience at a small-scale CSSX facility has shown that Isopar®L is lost from the system at a higher rate than other solvent components. Periodic addition of Isopar®L is required to maintain solvent density within the desired range. The loss of Isopar®L from the solvent can be trended by on-line process measurements of solvent density and the concentrations of diluents, extractant, modifier, and suppressant can be determined by periodic sampling and analysis of the SHT (TK-202).

Complete replacement of the CSSX solvent inventory requires multiple batches to be transferred from the Solvent Makeup Tank (TK-313) to the SHT (TK-202) via P-313.

#### 2.9.2.5 MST Receipt, Storage, and Transfer

MST is received and stored in the MST Storage Tank (TK-311) in the CCA. A mechanical agitator (AGT-311-1) is provided to mix and agitate MST in drums prior to transfer to the MST Storage Tank (TK-311) using the MST Drum Pump (P-311-1). A drum tumbler (DT-311) is available in the warehouse to mix the drums prior to transferring them to the CCA. The MST Storage Tank (TK-311) is sized to provide sufficient MST to process approximately 11 batches when the plant is operating in single strike mode. An agitator (AGT-311) is provided in the MST Storage Tank (TK-311) to mix and prevent settling of the MST in the tank.

MST is transferred from the MST Storage Tank (TK-311) to AST-A (TK-101) or AST-B (TK-221) by the MST Transfer Pump (P-311). The amount added will depend on the volume of the solution in the tank, the desired MST solution in the receiving vessel, and the concentration of MST in the MST Storage Tank (TK-311). The transfer lines are flushed with 1.66M dilute caustic after each transfer to either the AST-A (TK-101) or AST-B (TK-221).

## 2.10 Figures

**Figure 2-1. LW Disposition Baseline**

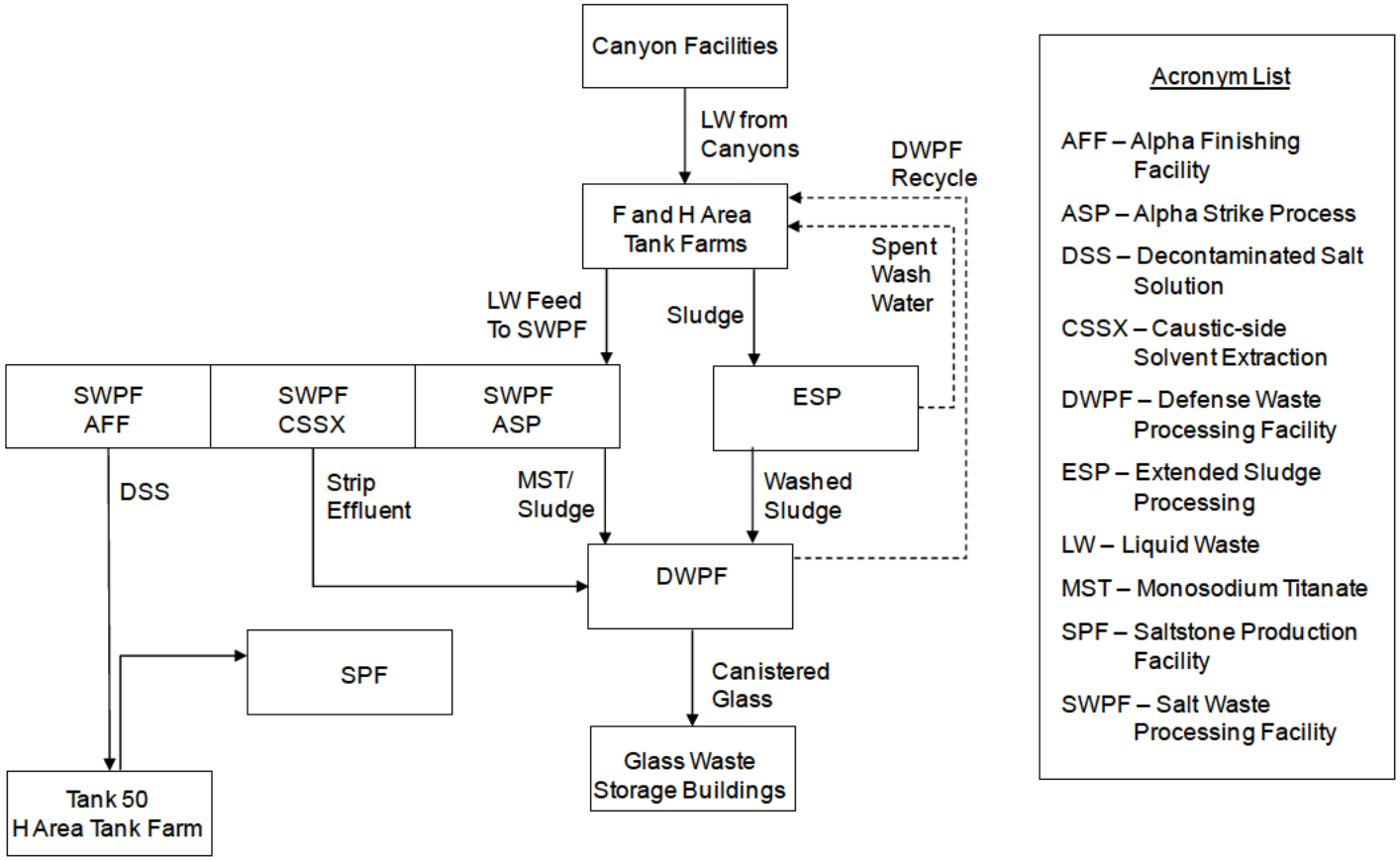

## Figure 2-2. Simplified Process Flow Diagram

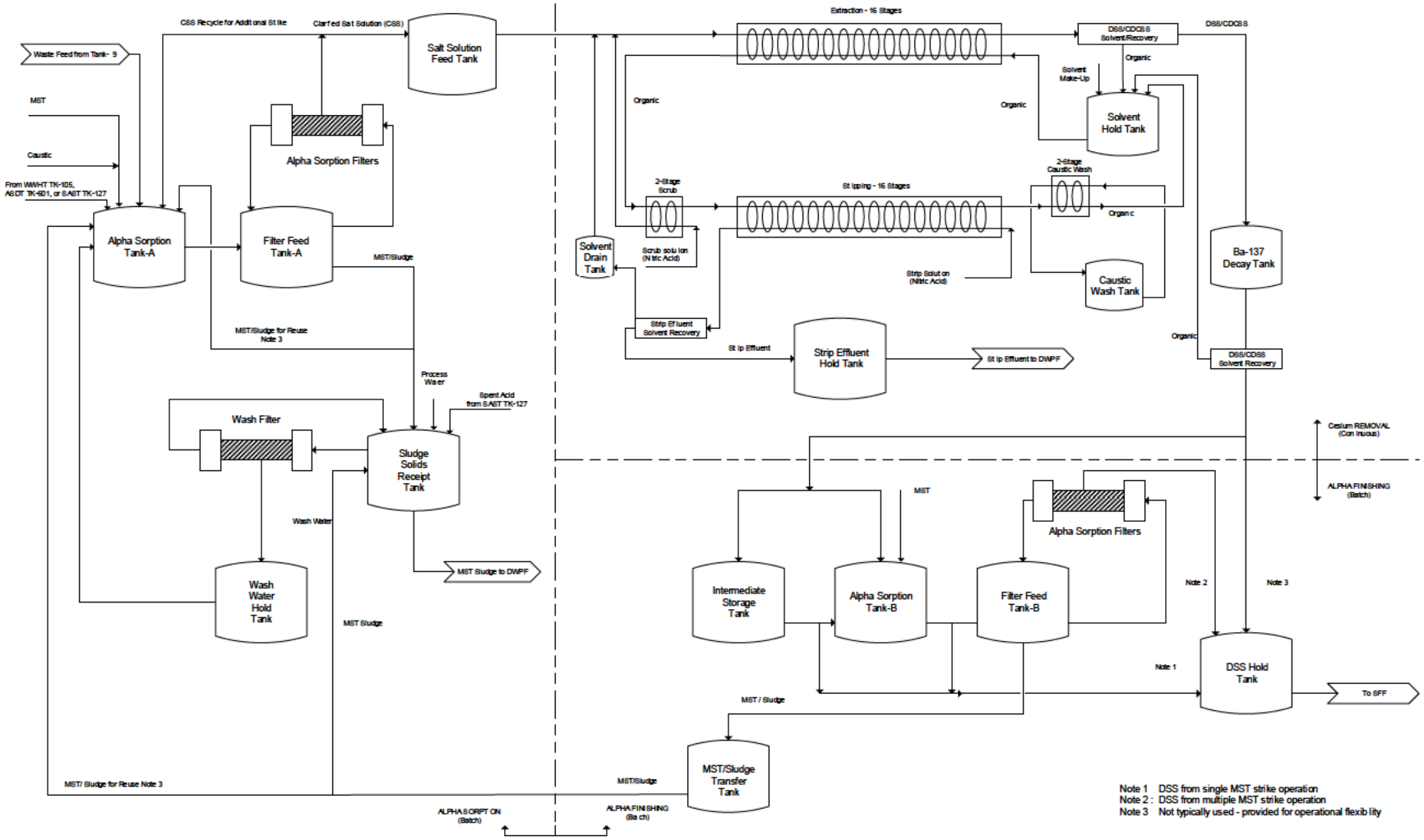

**Figure 2-3. SWPF Facility Structures**

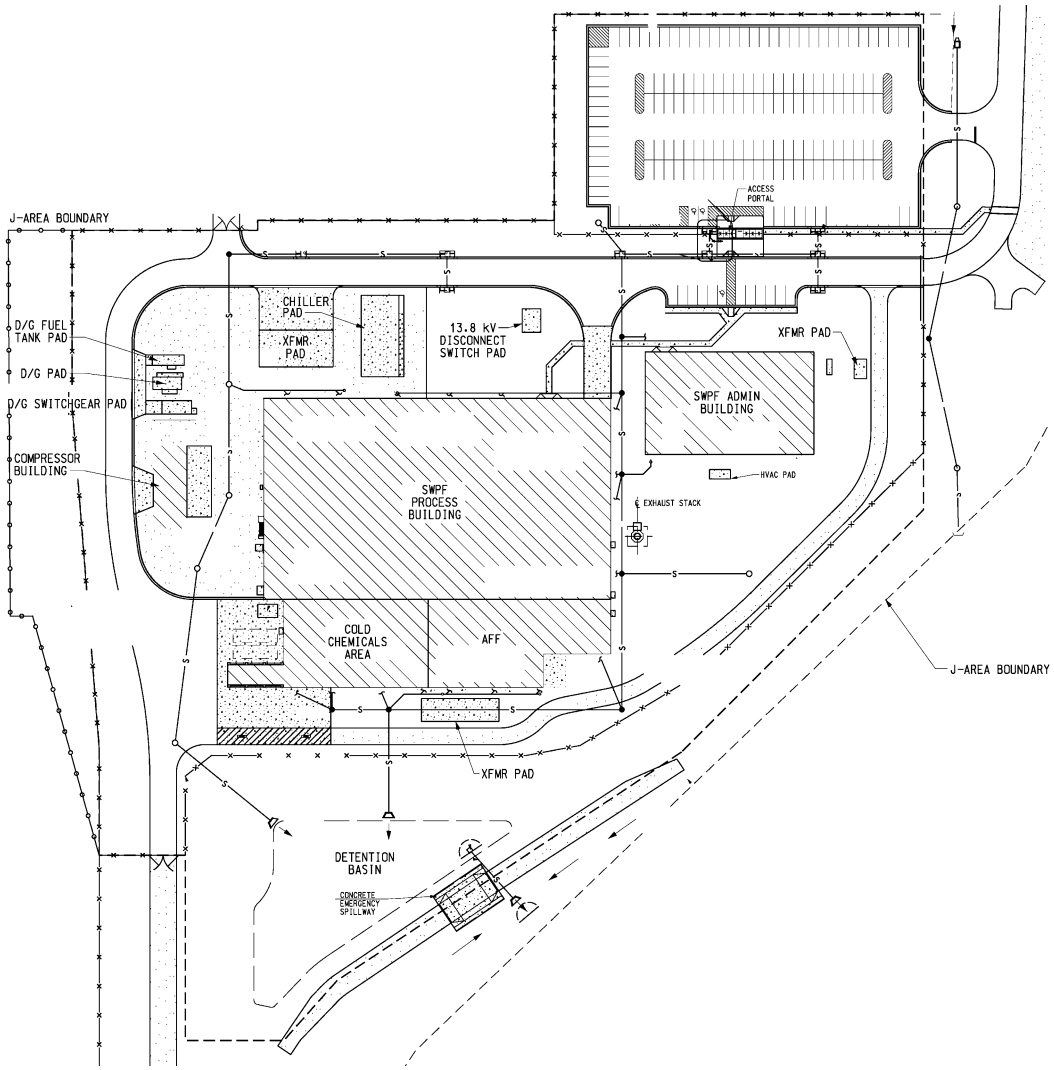

**Figure 2-4. Process Building, AFF, and Support Areas Layout**

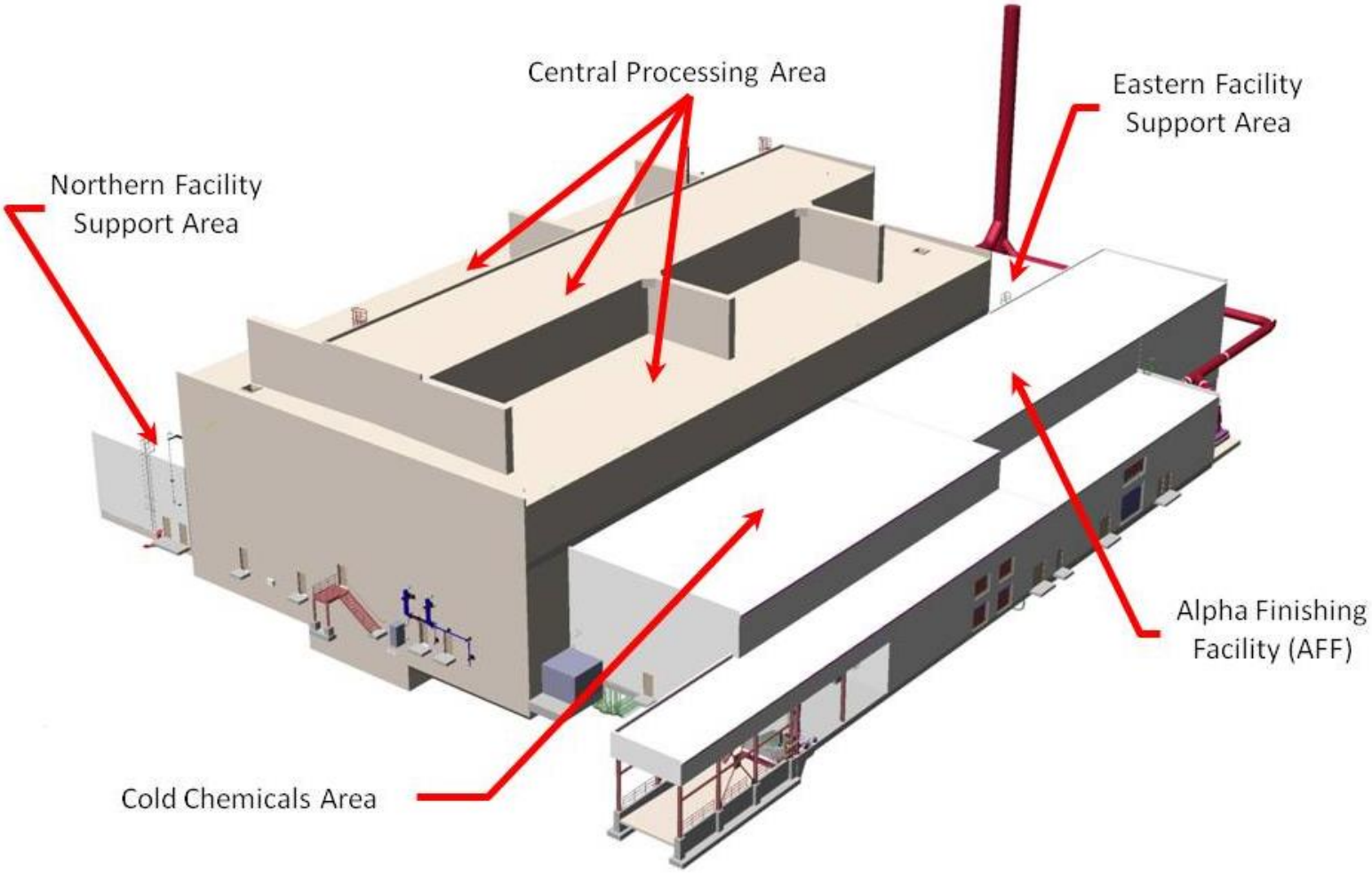

**Figure 2-5. Process Building and AFF Structural Overview**

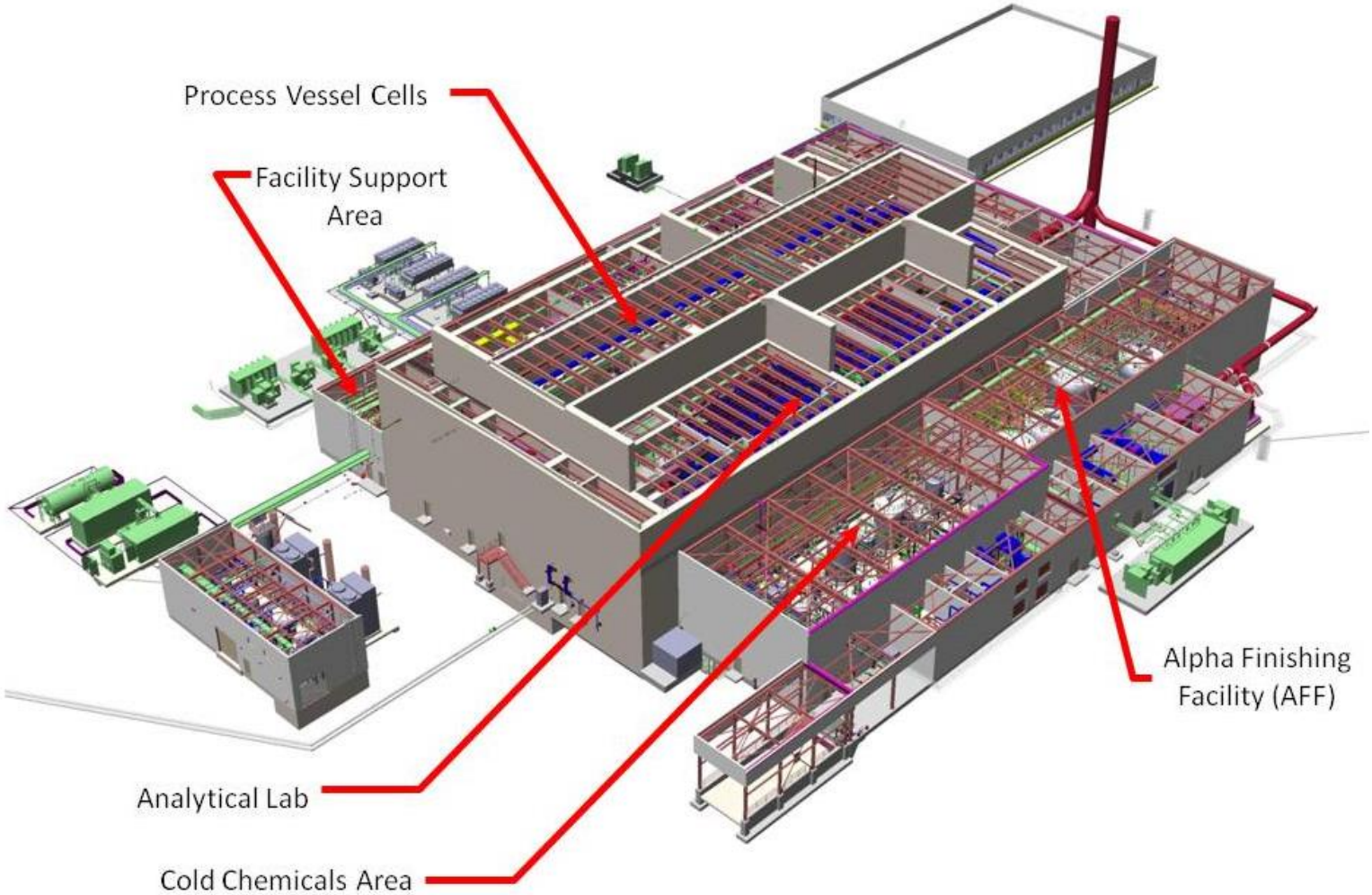

**Figure 2-6. Cross-flow Filter Tube Removal**

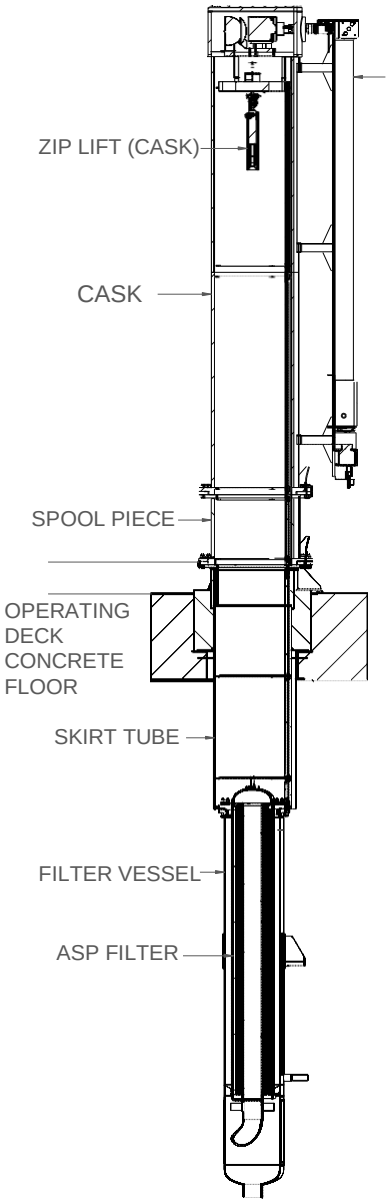

**Figure 2-7. Process Vessel AST-A (TK-101) External Components**

**Figure 2-8. Process Vessel AST-A (TK-101) Internal Components**

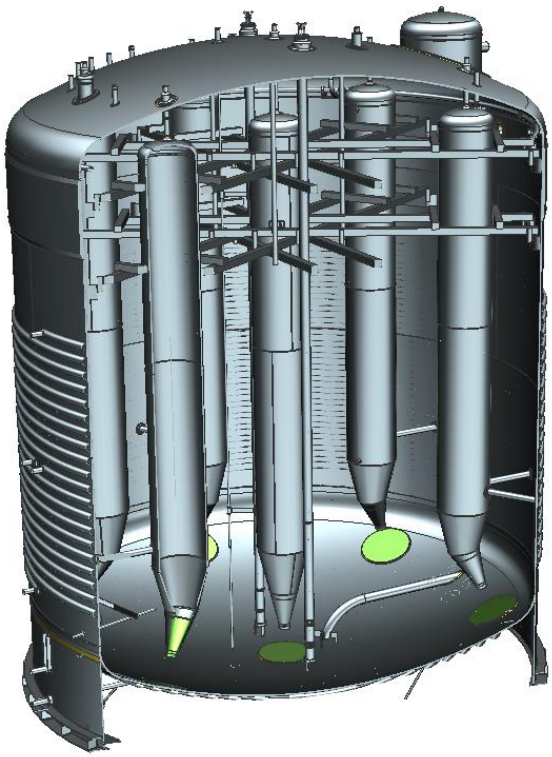

**Figure 2-9. Process Vessel FFT-A (TK-102) External Components**

**Figure 2-10. Process Vessel FFT-A (TK-102) Internal Components**

**Figure 2-11. Process Vessel SSRT (TK-104) External Components**

**Figure 2-12. Process Vessel SSRT (TK-104) Internal Components**

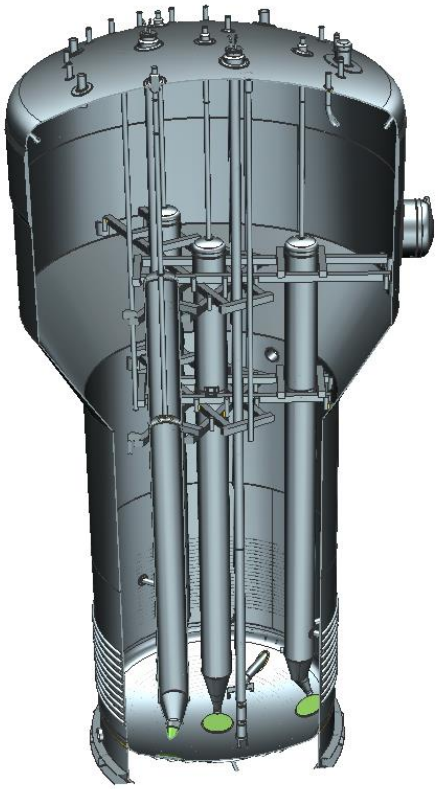

**Figure 2-13. Process Vessel WWHT (TK-105) External Components**

**Figure 2-14. Process Vessel WWHT (TK-105) Internal Components**

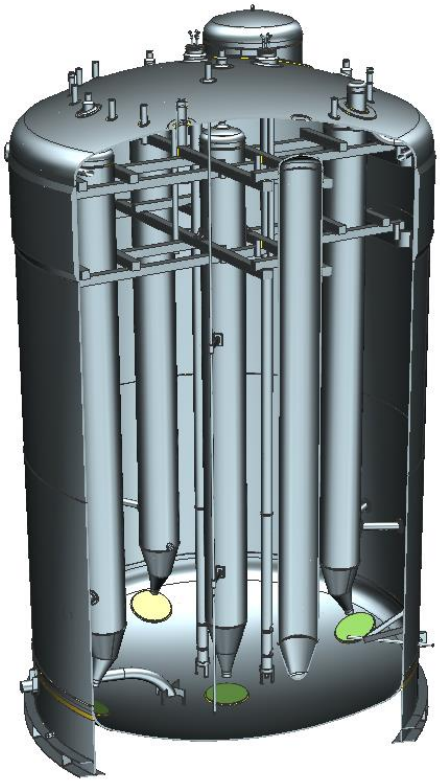

**Figure 2-15. Process Vessel SSFT (TK-109) External Components**

**Figure 2-16. Process Vessel SSFT (TK-109) Internal Components**

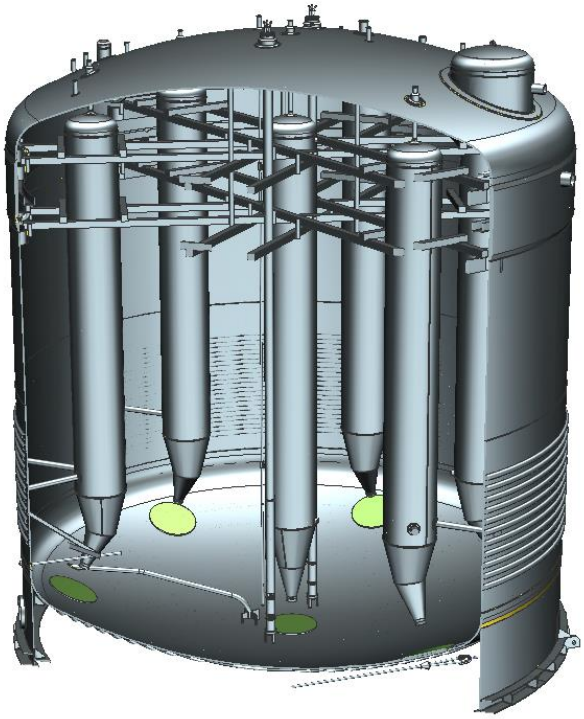

**Figure 2-17. Process Vessel SEHT (TK-205) External Components**

**Figure 2-18. Process Vessel SEHT (TK-205) Internal Components**

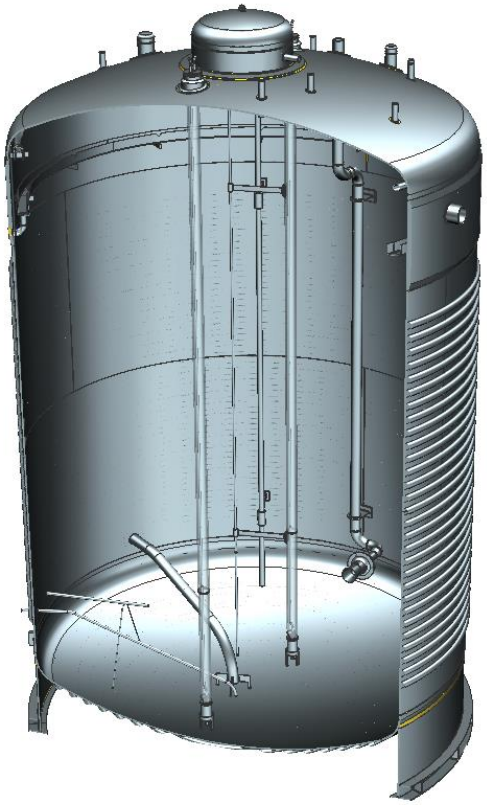

**Figure 2-19. Cutaway View of Annular Centrifugal Contactor**

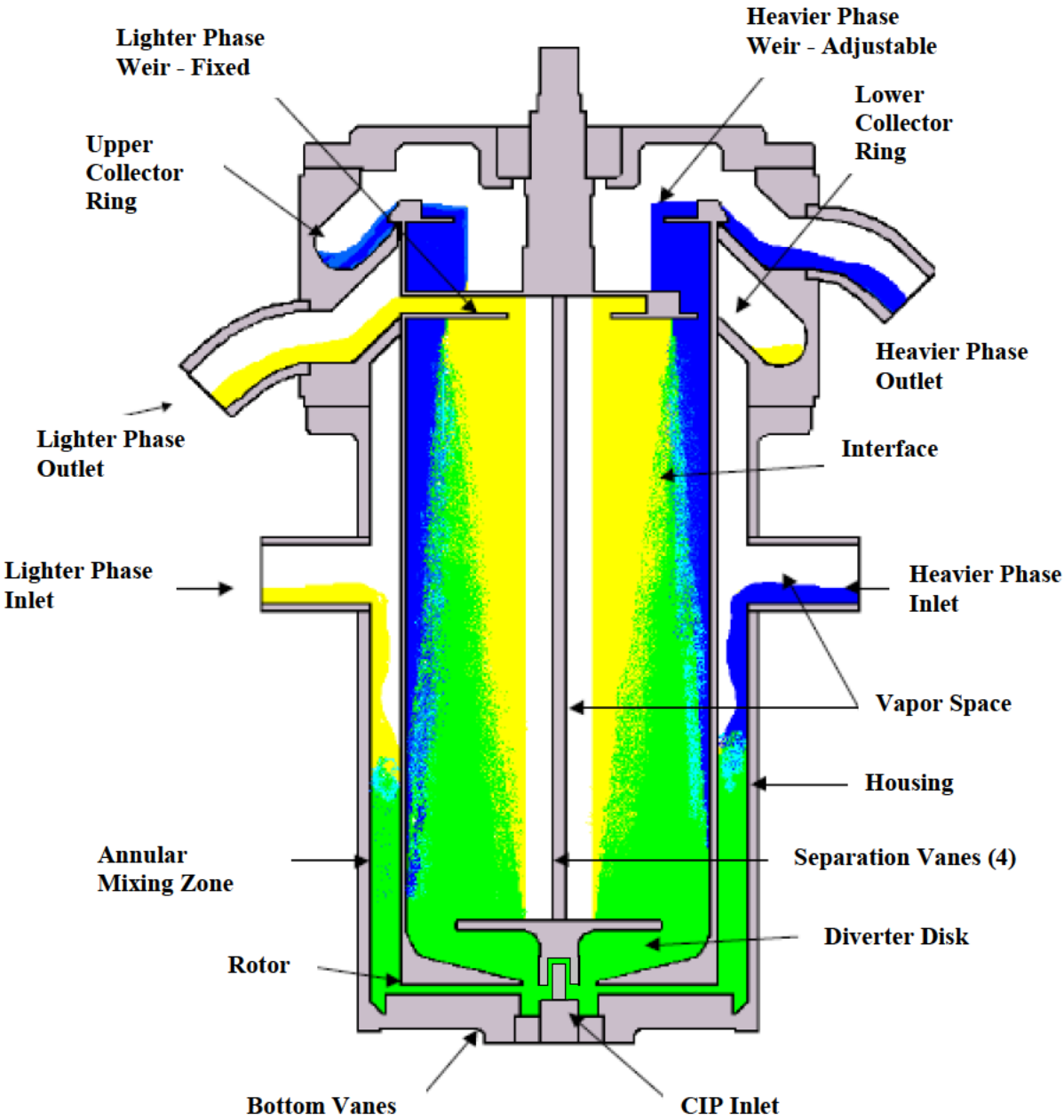

**Figure 2-20. Process Vessel IST (TK-220) External Components**

**Figure 2-21. Process Vessel IST (TK-220) Internal Components**

**Figure 2-22. Process Vessel AST-B (TK-221) External Components**

**Figure 2-23. Process Vessel AST-B (TK-221) Internal Components**

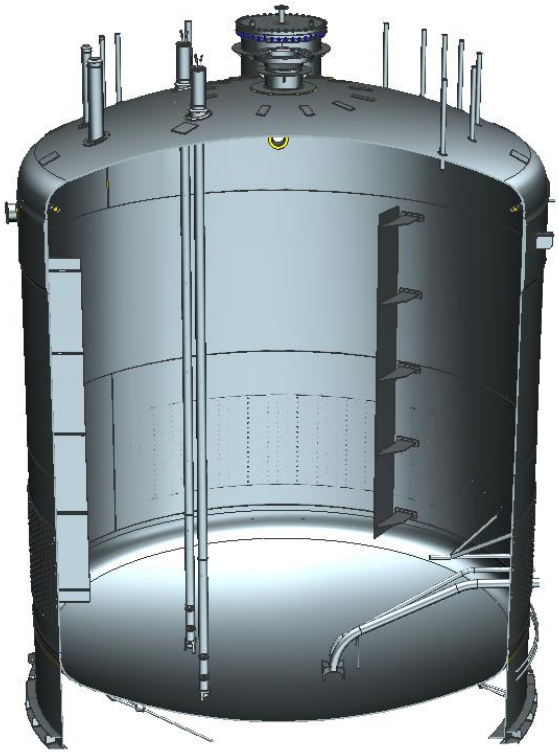

**Figure 2-24. Process Vessel FFT-B (TK-222) External Components**

**Figure 2-25. Process Vessel FFT-B (TK-222) Internal Components**

**Figure 2-26. Process Vessel DSSHT (TK-207) External Components**

**Figure 2-27. Process Vessel DSSHT (TK-207) Internal Components**

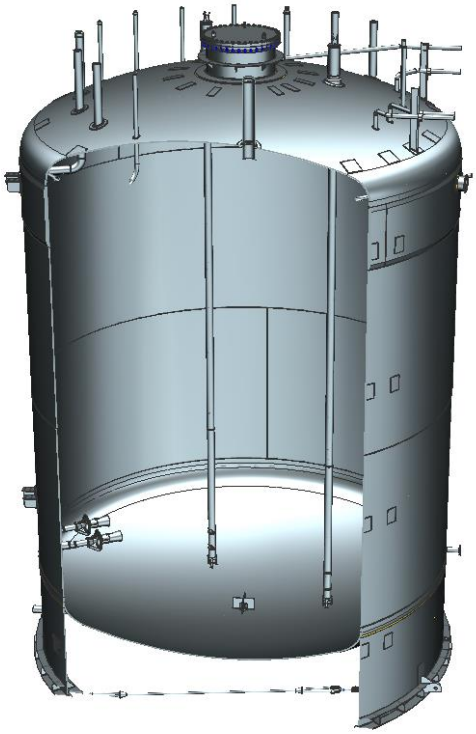

**Figure 2-28. Typical Air Pulse Agitator**

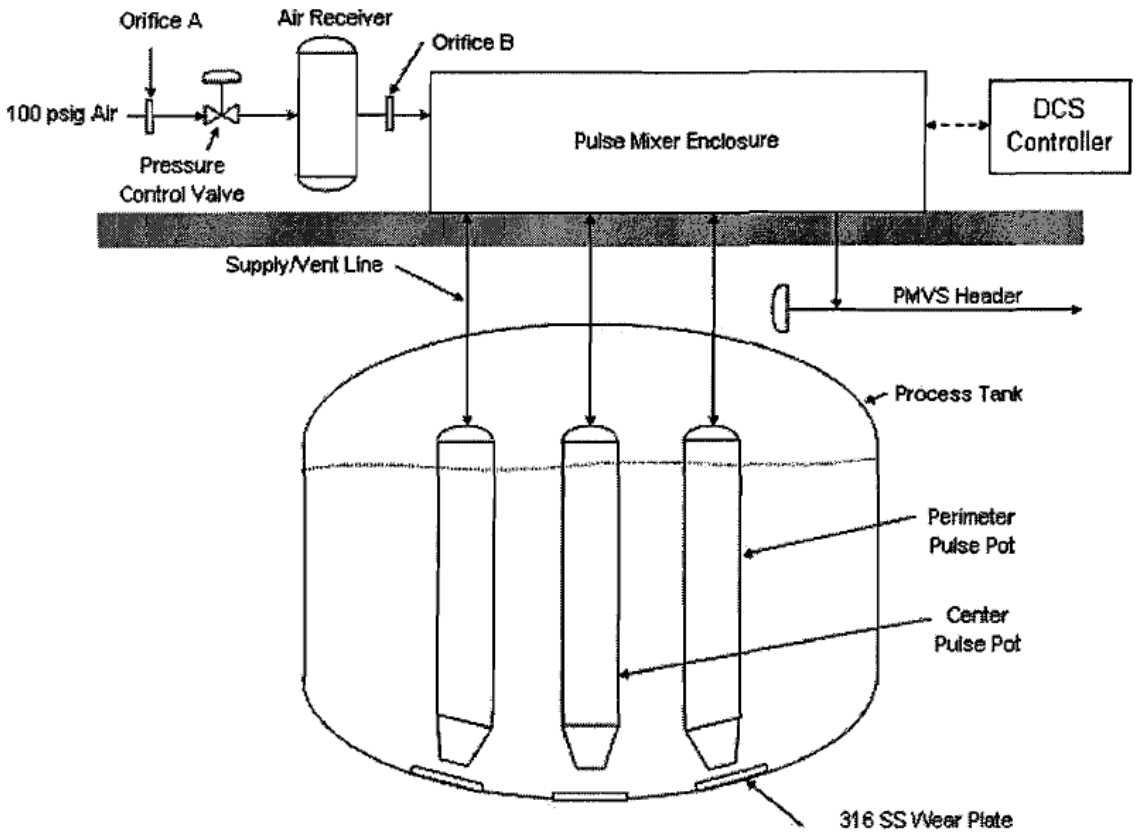

**Figure 2-29. Strip Contactors Tempered Water System**

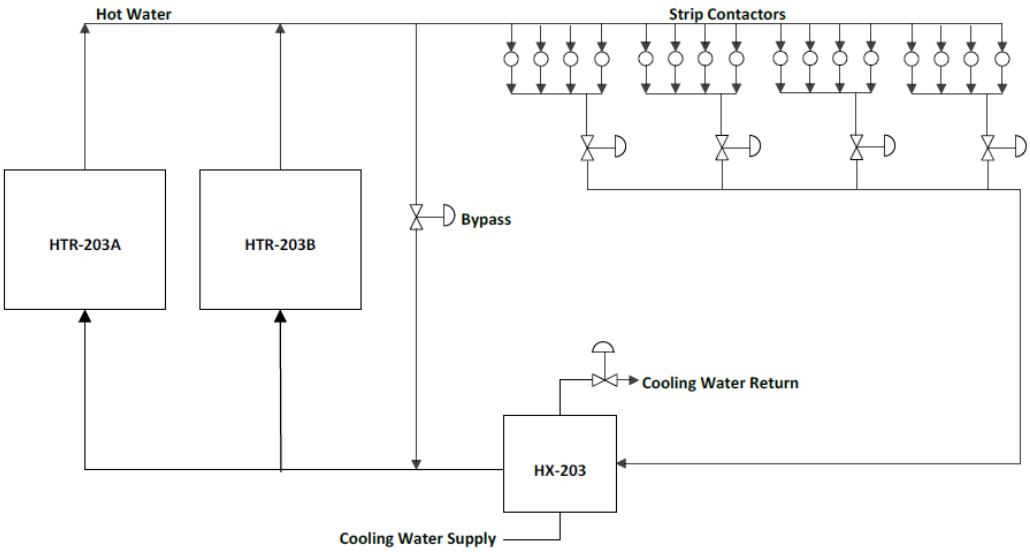


**Figure 2-30. Solvent Strip Feed Tempered Water System**

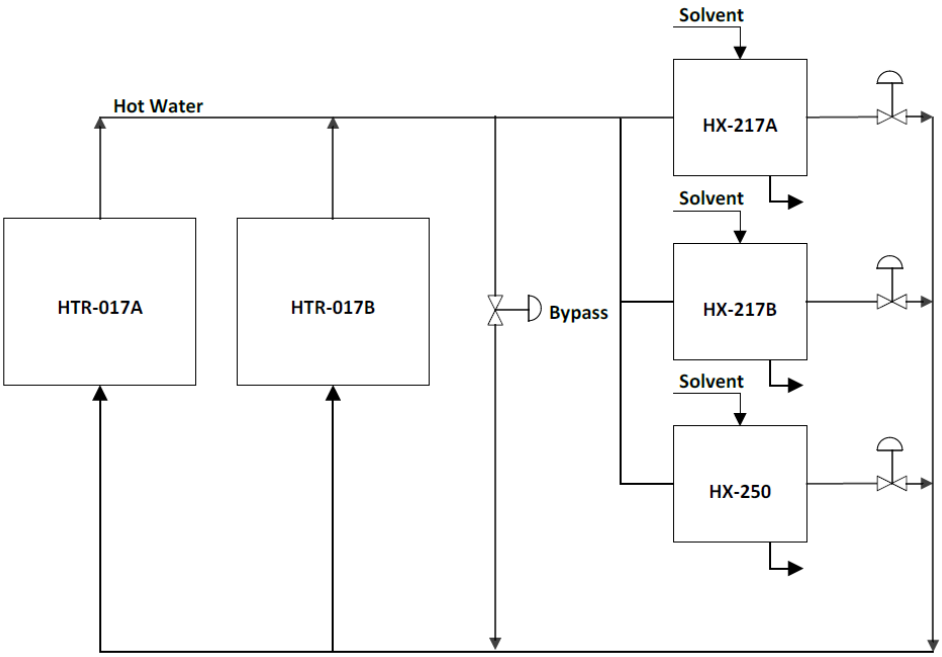

This page intentionally left blank.

## 2.11 References

[1] 10 CFR 830, *Nuclear Safety Management*.

[2] DOE O 420.1B, *Facility Safety*. U.S. Department of Energy, Washington, D.C.

[3] DOE O 420.1C, *Facility Safety*. U.S. Department of Energy, Washington, D.C.

[4] 00-700-24032, *DOE Order 420.1B/C Change. 1 Composite Requirements*. Interoffice Correspondence to B. Brasel (Deputy Director of Engineering) from B. Kerr (Nuclear Safety). Parsons, Aiken, South Carolina.

[5] DOE-STD-3009-94, Change Notice No. 3, *Preparation Guide for U.S. Department of Energy Nonreactor Nuclear Facility Documented Safety Analyses*. U.S. Department of Energy, Washington, D.C.

[6] S-RCP-J-00001, *SWPF Standards/Requirements Identification Document*. Parsons, Aiken, South Carolina.

[7] P-DB-J-00003, *SWPF Process Basis of Design*. Parsons, Aiken, South Carolina.

[8] P-DB-J-00004, *SWPF Balance of Plant Basis of Design*. Parsons, Aiken, South Carolina.

[9] P-SPC-J-00002, *SWPF Functional Specification*. Parsons, Aiken, South Carolina.

[10] P-SPC-J-00001, *SWPF Feed Strategy and Product and Secondary Waste Specification*. Parsons, Aiken, South Carolina.

[11] V-ESR-J-00010, *SWPF Waste Transfer Interface Control Document (ICD-10)*. Parsons, Aiken, South Carolina.

[12] 10 CFR 835, *Occupational Radiation Protection*.

[13] S-EIP-J-00004, *SWPF Final Design ALARA Review Report*. Parsons, Aiken, South Carolina.

[14] ASME NOG-1-2002, *Rules for Construction of Overhead and Gantry Cranes*. American Society of Mechanical Engineers.

[15] ANSI/ISA S84.00.01-2004, *Application of Safety Instrumented Systems for the Process Industries*. American National Standards Institute/Instrumentation, Systems, and Automation Society.

[16] IBC-2003, *International Building Code*. International Code Council, Falls Church, Virginia.

[17] ANSI/NFPA 101, *Life Safety Code*. American National Standards Institute/National Fire Protection Association. 2003.

[18] HLW-PRE-2002-0019, *Alpha Removal/Caustic Side Solvent Extraction Material Balance Calculations with Monosodium Titanate and Sodium Permanganate Alternatives*, Revision 0. Authors: Subosits, S.G. and S.G. Campbell. Westinghouse Savannah River Company, Aiken, South Carolina.

[19] P-ESR-J-00001, *Mass Balance Model Summary Description*. Parsons, Aiken, South Carolina.

[20] ANL-00/30, *Proof-of-Concept Flowsheet Tests for Caustic-Side Solvent Extraction of Cesium from Tank Waste*. Authors: Leonard, R.A., et al. Argonne National Laboratory, Argonne, Illinois. November 2002.

[21] P-RPT-J-00020, *SWPF Test Report: Cross-Flow Filter and Caustic-Side Solvent Extraction Integrated Test*. Parsons, Aiken, South Carolina.

[22] P-SYD-J-00001, *SWPF Sequence of Operations*. Parsons, Aiken, South Carolina.

[23] NFPA 10, *Standard for Portable Fire Extinguishers*. National Fire Protection Association. 2002.

[24] NFPA 72, *2002 National Fire Alarm Code.* National Fire Protection Association. 2002.

[25] F-SPP-G-00003, *Savannah River Site Fire Alarm Specification* (U), Revision 1. Westinghouse Savannah River Company, Aiken, South Carolina.

[26] ESH-EPG-2005-00050, *Exemption Approval: Salt Waste Processing Facility Project, Savannah River Site.* Westinghouse Savannah River Company, Savannah River Site, Aiken, SC.

[27] V-ESR-J-00013, *SWPF Telecommunications and Controls Datalink System Interface Control Document (ICD-13)*. Parsons, Aiken, South Carolina.

[28] NFPA 70, *2005 National Electrical Code*. National Fire Protection Association.

[29] ANSI/IEEE Standard C2-2002, *National Electrical Safety Code®* (NESC). American National Standards Institute/Institute of Electrical and Electronics Engineers.

[30] NFPA 780, *2004 Standard for the Installation of Lightning Protection Systems*. National Fire Protection Association.

[31] DOE-STD-3020-2005, *Specification for HEPA Filters Used by DOE Contractors*. U.S. Department of Energy, Washington, D.C.

[32] DOE-HDBK-1169-2003, *Nuclear Air Cleaning Handbook*. U.S. Department of Energy, Washington, D.C.

[33] ANSI/ASME N510-1989, *Testing of Nuclear Air-Treatment Systems*. American National Standards Institute/American Society of Mechanical Engineers.

# SWPF DOCUMENTED SAFETY ANALYSIS

# CHAPTER 3.0
# HAZARD AND ACCIDENT ANALYSES

This page intentionally left blank.

## TABLE OF CONTENTS

3.0 HAZARD AND ACCIDENT ANALYSES ..... 3.1-1

3.1 Introduction ..... 3.1-1
3.2 Requirements ..... 3.2-1
3.3 Hazard Analysis ..... 3.3-1
3.3.1 Hazard Analysis Methodology ..... 3.3-2
3.3.1.1 Hazard Identification ..... 3.3-3
3.3.1.2 Hazard Evaluation ..... 3.3-6
3.3.2 Hazard Analysis Results ..... 3.3-11
3.3.2.1 Hazard Identification Results ..... 3.3-11
3.3.2.2 Hazard Categorization ..... 3.3-12
3.3.2.3 Hazard Evaluation ..... 3.3-13
3.4 Accident Analysis ..... 3.4-1
3.4.1 Methodology ..... 3.4-1
3.4.1.1 Source Term Analysis ..... 3.4-1
3.4.1.2 Consequence Analysis ..... 3.4-11
3.4.1.3 Inputs and Assumptions ..... 3.4-12
3.4.2 Design Basis Accidents ..... 3.4-17
3.4.2.1 Process Vessel Cell Fire ..... 3.4-17
3.4.2.2 ASP Process Vessel Explosion ..... 3.4-22
3.4.2.3 AFF Process Vessel Explosion ..... 3.4-34
3.4.2.4 ASP APA Air Jet Aerosolization ..... 3.4-43
3.4.2.5 Seismic Event ..... 3.4-49
3.5 Beyond Design Basis Accidents ..... 3.5-1
3.5.1 500-Gallon Solvent Fire with SSRT-1 Waste BDBA ..... 3.5-1
3.5.2 Seismic Event with Mistransfers ..... 3.5-2
3.6 Figures ..... 3.6-1
3.7 Tables ..... 3.7-1
3.8 References ..... 3.8-1

**List of Tables**

Table 3.7-1. Hazard Analysis Source Information ..... 3.7-1
Table 3.7-2. SWPF Node Description ..... 3.7-8
Table 3.7-3. Standard Industrial Hazard Screening Criteria ..... 3.7-14
Table 3.7-4. Receptors by Location ..... 3.7-17
Table 3.7-5. Qualitative Consequence Matrix ..... 3.7-18

**Table 3.7-6. Qualitative Frequency Matrix ..... 3.7-19**
**Table 3.7-7. Qualitative Risk Matrix ..... 3.7-19**
**Table 3.7-8. Hazards by Node ..... 3.7-19**
**Table 3.7-9. Alpha Strike Process Tanks ..... 3.7-21**
**Table 3.7-10. Caustic-side Solvent Extraction Tanks ..... 3.7-22**
**Table 3.7-11. Alpha Finishing Facility Tanks ..... 3.7-23**
**Table 3.7-12. Cold Chemicals Area Tanks ..... 3.7-25**
**Table 3.7-13. Hazards Analysis Initial Conditions ..... 3.7-26**
**Table 3.7-14. Hazard Analysis Control List ..... 3.7-29**
**Table 3.7-15. Hazards Analysis Engineering Controls ..... 3.7-33**
**Table 3.7-16. Hazards Analysis Administrative Controls ..... 3.7-40**
**Table 3.7-17. Hazards Analysis Defense-In-Depth/Important-To-Safety Controls ..... 3.7-43**
**Table 3.7-18. Accident Analysis Control Crosswalk ..... 3.7-47**
**Table 3.7-19. Radiological Evaluation Basis Contents for Consequences Estimates ..... 3.7-54**
**Table 3.7-20. Hazard Analysis Events with High Consequences to the Onsite-2 Receptor 3.7-59**
**Table 3.7-21. Hazard Analysis Event Grouping into Design Basis Accidents ..... 3.7-78**
**Table 3.7-22. Design Basis Accident Control Summary ..... 3.7-79**

## LIST OF ACRONYMS AND ABBREVIATIONS

| | |
|---|---|
| % | Percent |
| °C | degrees Celsius |
| °F | degrees Fahrenheit |
| µm | Micrometer |
| A | Anticipated |
| AA | Accident Analysis |
| AC | Administrative Control |
| ADS | Air Dilution System |
| AFDT | Alpha Finishing Drain Tank (TK-228) |
| AFF | Alpha Finishing Facility |
| ALARA | As Low As Reasonably Achievable |
| Am | Americium |
| AMAD | Activity Median Aerodynamic Diameter |
| ANSI | American National Standards Institute |
| APA | Air Pulse Agitator |
| ARF | Airborne Release Fraction |
| ARR | Airborne Release Rate |
| ASDT | Alpha Sorption Drain Tank (TK-601) |
| ASME | American Society of Mechanical Engineers |
| ASP | Alpha Strike Process |
| ASSE | American Society of Safety Engineers |
| AST-A | Alpha Sorption Tank-A (TK-101) |
| AST-B | Alpha Sorption Tank-B (TK-221) |
| Ba | Barium |
| BDBA | Beyond Design Basis Accident |
| BDT | Ba-137 Decay Tank (TK-206) |
| BEU | Beyond Extremely Unlikely |
| BPCS | Basis Process Control System |
| BR | Breathing Rate |
| CAM | Continuous Air Monitor |
| CCA | Cold Chemicals Area |
| CDCSS | Cesium-depleted Clarified Salt Solution |
| CFF | Cross-flow Filter |
| CFR | Code of Federal Regulations |
| Ci | Curie |
| Ci/gal | Curies per gallon |
| CLFL | Composite Lower Flammability Limit |
| CPA | Central Processing Area |
| CR | Control Room |
| Cs | Cesium |
| Cs-7SB | 1-(2,2,3,3-tetrafluoropropoxy)-3-(4-sec-butylphenoxy)-2-propanol |
| CSDT-A | Cleaning Solution Dump Tank-A (TK-103) |
| CSDT-B | Cleaning Solution Dump Tank-B (TK-223) |

## LIST OF ACRONYMS AND ABBREVIATION (cont.)

| | |
|---|---|
| CSS | Clarified Salt Solution |
| CSSX | Caustic-side Solvent Extraction |
| DBA | Design Basis Accident |
| DCF | Dose Conversion Factor |
| DCS | Distributed Control System |
| DF | Decontamination Factor |
| DID | Defense-in-Depth |
| DOE | U.S. Department of Energy |
| DOT | U.S. Department of Transportation |
| dP | Differential pressure |
| DR | Damage Ratio |
| DSA | Documented Safety Analysis |
| DSS | Decontaminated Salt Solution |
| DSSHT | Decontaminated Salt Solution Hold Tank (TK-207) |
| DWPF | Defense Waste Processing Facility |
| EC | Engineering Control |
| EFD | Enhanced Final Design |
| EG | Evaluation Guideline |
| EPA | U.S. Environmental Protection Agency |
| ERPG | Emergency Response Planning Guideline |
| EU | Extremely Unlikely |
| FAA | Federal Aviation Authority |
| FFT-A | Filter Feed Tank-A (TK-102) |
| FFT-B | Filter Feed Tank-B (TK-222) |
| FHA | Fire Hazards Analysis |
| ft | Feet/Foot |
| g/L | Grams per liter |
| GA | General Arrangement |
| $H_2$ | Hydrogen |
| $H_2C_2O_4$ | Oxalic Acid |
| HA | Hazard Analysis |
| HAZOP | Hazard and Operability Review |
| HC | Hazard Category |
| HE | Hazard Evaluation |
| HEPA | High-efficiency Particulate Air |
| HI | Hazard Identification |
| $HNO_3$ | Nitric acid |
| HTF | H-Area Tank Farm |
| HVAC | Heating, Ventilating, and Air Conditioning |
| IBC | International Building Code |
| IC | Initial Condition |
| ICRP | International Commission on Radiological Protection |
| IST | Intermediate Storage Tank (TK-220) |
| ITS | Important-to-Safety |

## LIST OF ACRONYMS AND ABBREVIATION (cont.)

| | |
|---|---|
| kV | kilovolt |
| LFL | Lower Flammability Limit |
| LOP | Loss of Power |
| LPF | Leak Path Factor |
| M | Molar |
| MACCS2 | MELCOR Accident Consequence Code System 2 |
| MAR | Material-at-Risk |
| mg/L | Milligrams per liter |
| MOI | Maximally Exposed Offsite Individual |
| MST | Monosodium Titanate |
| MSTT | MST/Sludge Transfer Tank (TK-224) |
| NaOH | Sodium hydroxide |
| NAS | Sodium Aluminum Silicate |
| NFPA | National Fire Protection Association |
| NIOSH | National Institute for Occupational Safety and Health |
| NOTAM | Notice to Airmen |
| NPH | Natural Phenomena Hazard |
| ORNL | Oak Ridge National Laboratory |
| OSHA | Occupational Safety and Health Administration |
| P&ID | Piping and Instrumentation Diagram |
| P&VG | Pump and Valve Gallery |
| PAS | Plant Air System |
| PBVS | Process Building Ventilation System |
| PC | Performance Category |
| PEL | Permissible Exposure Limit |
| PFD | Process Flow Diagram |
| PIE | Potential Initiating Event |
| PISA | Potential Inadequacy in the Safety Analysis |
| PMB | Process Mass Balance |
| PMVS | Pulse Mixer Ventilation System |
| PP | Project Procedure |
| Pu | Plutonium |
| PVVS | Process Vessel Ventilation System |
| QRA | Qualitative Risk Analysis |
| rem | Roentgen Equivalent Man |
| RF | Respirable Fraction |
| SAC | Specific Administrative Control |
| SAST | Spent Acid Storage Tank (TK-127) |
| SB | Safety Basis |
| SC | Safety Class |
| scfm | Standard cubic feet per minute |
| SDG | Standby Diesel Generator |
| SEHT | Strip Effluent Hold Tank (TK-205) |
| SHT | Solvent Hold Tank (TK-202) |

## LIST OF ACRONYMS AND ABBREVIATION (cont.)

| | |
|---|---|
| SIH | Standard Industrial Hazard |
| SIS | Safety Instrumented System |
| SMD | Sauter Mean Diameter |
| SME | Subject Matter Expert |
| SMP | Safety Management Program |
| SOP | Standard Operating Procedure |
| SPF | Saltstone Production Facility |
| Sr | Strontium |
| SRS | Savannah River Site |
| SRSOC | Savannah River Site Operations Center |
| SS | Safety Significant |
| SSC | Structure, System, and Component |
| SSFT | Salt Solution Feed Tank (TK-109) |
| SSRT | Sludge Solids Receipt Tank (TK-104) |
| ST | Source Term |
| SWPF | Salt Waste Processing Facility |
| TBP | Tributylphosphate |
| TED | Total Effective Dose |
| TEEL | Temporary Emergency Exposure Limit |
| TNT | Trinitrotoluene |
| TOA | Tri-octylamine |
| TOC | Threshold of Concern |
| TPQ | Threshold Planning Quantity |
| TQ | Threshold Quantity |
| TSR | Technical Safety Requirement |
| TWA | Time-Weighted Average |
| TWD | Technical Work Document |
| U | Unlikely |
| UCS | Unmitigated Consequence Screen |
| UPS | Uninterruptible Power Supply |
| VOC | Volatile Organic Compound |
| WAC | Waste Acceptance Criteria |
| WSRC | Washington Savannah River Company |
| wt% | Weight percent |
| WTE | Waste Transfer Enclosure |
| WWHT | Wash Water Hold Tank (TK-105) |
| Y | Yttrium |
| yr | Year |
| $\chi/Q$ | Airborne Dispersion Factor |

# 3.0 HAZARD AND ACCIDENT ANALYSES

## 3.1 Introduction

This Subchapter provides an introduction to the contents of Chapter 3 based on the graded approach and includes objectives and scope specific to the subsection as developed. The purpose of this Salt Waste Processing Facility (SWPF) Documented Safety Analysis (DSA) Chapter is to provide information satisfying the requirement of 10 Code of Federal Regulations (CFR) 830, *Nuclear Safety Management*[1], to evaluate normal, abnormal, and accident conditions, including consideration of natural phenomena events, external events, and initiating events that might contribute to the release of hazardous materials. The purpose of this SWPF DSA Chapter also includes consideration of the need for analysis of accidents beyond the design basis of the facility.

This SWPF DSA Chapter describes the process used to systematically identify and assess hazards to evaluate the potential internal, man- made external, and natural events that can cause the identified hazards to develop into accidents.

Externally to this SWPF DSA, V-PHR-J-00007, *SWPF Hazard Analysis*[2] (SWPF HA) systematically identified hazards and systematically evaluated events with a potential to release hazardous materials that may impact workers, collocated worker, and/or public. The SWPF HA (V-PHR-J-00007[2]) analyzed potential event consequences and likelihood of occurrence to derive preventative and mitigative controls.

This SWPF DSA Chapter presents the results of the SWPF HA (V-PHR-J-00007[2]) with appropriate reference to the SWPF HA (V-PHR-J-00007[2]) when necessary for additional detail. The SWPF HA (V-PHR-J-00007[2]) concluded with a limited set of events to be considered as Design Basis Accidents (DBAs) defined in Subchapter 3.4 of this SWPF DSA. As presented herein, the subsequent Accident Analysis (AA) evaluate these DBAs for comparison with the Evaluation Guideline (EG).

Functionally, this DSA Chapter covers the topics of hazard identification, facility hazard categorization, hazard evaluation (HE), and AA following a graded approach in accordance with 10 CFR 830[1], and U.S. Department of Energy (DOE)-STD-3009-94, Change Notice No. 3, *Preparation Guide for U.S. Department of Energy Nonreactor Nuclear Facility Documented Safety Analyses*[3]. The graded approach adjusted the level of detail and development effort applied to this DSA to the physical and operating characteristics of the SWPF, based on the particular characteristics of the SWPF and the relative magnitude of radiological and non-radiological hazards.

Subchapter 3.2 identifies the design codes, standards, regulations, and DOE Orders required for establishing the Safety Basis (SB) of the facility applicable to development of the HA and AA presented in this chapter.

Subchapter 3.3 describes the hazard identification (HI) and HE performed for SWPF. Subchapter 3.3 includes results of the HI, results of the HE, and the subsequent SWPF Hazard Category (HC) – HC-2 Nuclear Facility. Section 3.3 provides the SWPF control strategy and derives the controls including the credited controls – Engineering Controls (ECs) and Administrative Controls (ACs), as well as the non-credited Defense-in-Depth (DID), and Defense-in-Depth/Important-to-Safety (DID/ITS) controls. Subchapter 3.3 describes worker safety, environmental protection, and identification of unique and representative accidents carried forward into Subchapter 3.4.

Subchapter 3.4 presents results of the AA. The emphasis is placed on bounding DBAs with significant consequences to determine if Safety Class (SC) structures, systems, and components (SSCs) are required.

Subchapter 3.5 presents the results of the analysis of the potential consequences of accidents which are beyond the design basis for the facility and are representative Beyond Design Basis Accidents (BDBAs). BDBAs are analyzed to provide a perspective on the residual risk associated with operation of SWPF.

## 3.2 Requirements

This Section lists the design codes, standards, regulations, and DOE Orders that are required for establishing the SB of the facility that are specific for Chapter 3.0. The HA and AA presented in this chapter have been developed in accordance with requirements of the following codes, DOE Orders, Standards, and Procedures:

- 10 CFR 830[1];
- DOE-STD-3009-94, Change Notice No. 3[3];
- DOE-STD-1027-92, Change Notice No. 1, *Hazard Categorization and Accident Analysis Techniques for Compliance with DOE Order 5480.23, Nuclear Safety Analysis Reports*[4];
- DOE-HDBK-3010-94, Change Notice 1, *Airborne Release Fractions/Rates and Respirable Fractions for Non-Reactor Nuclear Facilities*[5];
- DOE O 420.1B, *Facility Safety*[6];
- DOE-STD-1020-2002, *Natural Phenomena Hazards Design and Evaluation Criteria for Department of Energy Facilities*[7];
- DOE-STD-1021-93, Change Notice No. 1, *Natural Phenomena Hazards Performance Categorization Guidelines for Structures, Systems, and Components*[8]; and
- PP-NS-5505, *Hazard Analysis Supporting the Safety Basis*[9].

This page intentionally left blank.

## 3.3 Hazard Analysis

This Section describes the HI and HE methodology and subsequent results for the SWPF. The purpose of this information is to present an evaluation of process related events, natural phenomena events, and external hazards that can potentially impact worker, collocated worker, and public as well as the environment. Consideration is given to events for operational and maintenance configurations. In addition, the potential for both equipment failures and human errors are evaluated as causes for releases of radiological and non-radiological hazardous materials.

Following standards practices, the HI and HE provide a thorough, albeit predominantly qualitative evaluation of the operational risks to the worker, collocated worker, and public. The evaluation identifies preventive and mitigative features, including identification of expected operator error, operator response to incidents, and subsequent provisions for operator protection.

The SWPF HA (V-PHR-J-00007[2]) followed an appropriate graded approach. Application of the graded approach is based on the judgment and experience of the analysts and results in the selection of a HE technique. The systematic application of the chosen technique(s) generates a number of basic events that are binned in accordance with predefined consequence and frequency ranking thresholds.

The SWPF HA (V-PHR-J-00007[2]) provides a systematic approach to identify hazards, evaluate hazards, and analyze control strategies to mitigate associated risks of the defined hazards of the process. The SWPF HA (V-PHR-J-00007[2]) reflects a traditional HI and HE, together with an additional analysis (i.e., Qualitative Risk Analysis [QRA]) to derive controls. Several screening methods (i.e., Standard Industrial Hazard [SIH] Screening, Unmitigated Consequence Screen [UCS]) are employed to right-size and narrow the focus of controls to those credited for a reduction in risk. The SWPF HA (V-PHR-J-00007[2]), as summarized herein, provides the documentation of controls which are credited for reducing operational risks.

The SWPF HA (V-PHR-J-00007[2]) evaluates the potential hazards of radioactive and other hazardous materials in association with the SWPF operations, maintenance, and support structures to derive controls. Derived controls are credited for a reduction in overall facility risk and are commensurate with the hazards present and complexity of the systems in association with the SWPF processes. The scope of the SWPF HA (V-PHR-J-00007[2]) physically includes the defined SWPF Nodes, and functionally includes the processes and equipment as defined within the SWPF Nodes. Both the footprint and processes of the SWPF Nodes is discussed in Section 3.3.1.1.1. The SWPF HA (V-PHR-J-00007[2]) is at the process-level, reflective of the Node and Sub-Node division of the SWPF.

To support this Chapter of this DSA, the SWPF HA (V-PHR-J-00007[2]) engaged a multidisciplinary team with varying tasks and responsibilities. As a part of the HA documentation, participant names, expertise, and functions, as well as the number and length of HA sessions, and attendance at each session are recorded in Appendix A of the SWPF HA (V-PHR-J-00007[2]).

As presented herein, the results of the SWPF HA (V-PHR-J-00007[2]) reflect those hazards only with the potential for Moderate or High impact to the Public; or High impact to the Worker or Collocated Worker. Potential impacts to each receptor are evaluated for events identified in association with the Worker, Collocated Worker, and Public.

### 3.3.1 Hazard Analysis Methodology

This Subsection presents the methodology used to identify and characterize hazards and to perform a systematic evaluation of events with a potential to release radiological and non-radiological hazards. DOE-STD-3009-1994, Change Notice No. 3, *Preparation Guide for U.S. Department of Energy Nonreactor Nuclear Facility documented Safety Analysis*[10] is the SWPF code of record containing the guidance and requirements for ensuring a consistent HA approach.

Additional guidance for completing the HA are provided in PP-NS-5505[9], Savannah River Site (SRS) SCD-11, *Consolidated Hazard Analysis Process Program and Methods Manual*[11], DOE-STD-3009-2014, *Preparation of Nonreactor Nuclear Facility Documented Safety Analysis*[12] and the American National Standards Institute, Inc. (ANSI)/American Society of Safety Engineers (ASSE) Z590.3–2011, *Prevention through Design: Guidelines for Addressing Occupational Hazards and Risks in Design and Redesign Processes*[13].

Each of the PP-NS-5505[9], SCD-11[11], DOE-STD-3009-1994, Change Notice No. 3[10], DOE-STD-3009-2014[12], and ANSI/ASSE Z590.3–2011[13] reference the American Institute of Chemical Engineers, *Guidelines for Hazard Evaluation Procedures – Third Edition*[14] as a resource for HA and HE techniques. The SWPF HA (V-PHR-J-00007[2]) follows the requirements presented in DOE-STD-3009-1994, Change Notice No. 3[10], subsequent guidance presented in the *Guidelines for Hazard Evaluation Procedures – Third Edition*[14], and adopts the principles of engineered safety.

Following the guidance and requirement references, the SWPF HA (V-PHR-J-00007[2]) implements a systematic approach to completing the HI by using a comprehensive HI checklist on each identified Node/Sub-Node. Identified hazards are evaluated through a SIH screen by comparison against referenced thresholds. Non-SIH and SIH that are potential initiating events (PIEs) are carried forward for event analysis.

Consequence assignments for the Worker, Collocated Worker, and Public are assigned. The assigned consequences are systematically evaluated through a standard list of potential release events following a What-If/Checklist method. Of those events, only those events with a potential for Moderate or High impact to the Public; or High impact to the Worker or Collocated Worker are evaluated through the QRA method. This SWPF UCS narrowed focus of the SWPF HE Tables to those events necessary to derive the controls to meet the requirements of DOE-STD-3009-1994, Change Notice No. 3[10]. These remaining events carry into the QRA. The QRA method uses unmitigated consequence and unmitigated frequency to derived unmitigated risk.

Controls are applied either to reduce frequency (preventive) or to reduce consequence (mitigative) to derive an acceptable mitigated risk. Additional DID and DID/ITS controls are

identified and provide additional layers of protection and requirements through management plans, policies, corporate and facility Safety Management Programs (SMPs), Standard Operating Procedures (SOPs), and Technical Work Documents (TWDs).

#### 3.3.1.1 Hazard Identification

This Subsection identifies the method used to identify hazardous materials and energy sources (in terms of quantity, form, and location) associated with the SWPF processes.

This Subsection first identifies sources of referenced information that are not an integral part of this DSA HI but are integral to the SWPF HA (V-PHR-J-00007[2]). This Subsection also indicates the sources from which information was obtained, such as flowsheet inventories, maximum historical inventories, vessel sizes, contamination analyses, etc. The interpretation of the data used to derive conservative inventory values needs to be provided. These sources are presented in Table 3.7-1. The referenced documentation includes a brief abstract of referenced documentation with enough of the salient facts to provide an understanding of reference documentation and the relation to this chapter.

##### 3.3.1.1.1 Node Development

As provided by the SWPF HA (V-PHR-J-00007[2]), the SWPF is divided into Nodes based on hazardous material inventory, process function, and physical location. Nodes are grouped into like areas of the SWPF to streamline the HE and HA process. Sub-Nodes further divide areas within the SWPF Nodes in order to breakdown the HA into manageable pieces to support a systematic evaluation. For the SWPF HA (V-PHR-J-00007[2]), the SWPF was divided into seven (7) Nodes and additional Sub-Nodes. Nodes, Sub-Nodes, and corresponding descriptions are presented in Table 3.7-2.

The SWPF process consists of three (3) distinct steps primarily in Node 1 –Central Processing Area (CPA) and Node 2 –Alpha Finishing Facility (AFF). The first step, Alpha Strike Process (ASP), uses Monosodium Titanate (MST) to strip Actinides/Strontium (Sr) from the process stream and concentrate Actinides/Sr into a MST-containing/Sludge. The concentrated Actinide MST/Sludge slurry is routed to the SRS Defense Waste Processing Facility (DWPF) for final treatment and disposition. The liquid effluent from the ASP moves on in the SWPF process to the Caustic-side Solvent Extraction (CSSX) step.

In this step, Cesium (Cs) is removed from the process stream using a solvent and CSSX contactors. The CSSX process sends the Cs enriched strip effluent solution to the DWPF for final treatment and disposition. The remaining liquid effluent from the CSSX step moves on in the SWPF process to the AFF. The AFF is the final step in the SWPF process. In the AFF, Sr and Actinides may be further concentrated using MST and sent to the DWPF for final treatment and disposition. The remaining decontaminated process stream is routed to the SRS Saltstone Production Facility (SPF) for final treatment and disposition.

The primary hazards of concern follow the process where Actinides/ Sr are concentrated and Cs is stripped from the process stream. Primary hazards of concern are airborne radiological

material and direct exposure to ionizing radiation. Chemical and other ancillary hazards reflect the contaminants of the process stream and supporting process chemistry (e.g., nitric acid, caustic, etc.) but generally have the potential to impact only the immediate worker.

The primary areas of concern for hazardous material releases are in Node 1. As part of Node 1, the Process Vessel Cells contain the vessels that process radioactive high-activity waste feed and products. The vessels differ mainly in terms of the radioactive inventory and radionuclide distribution. The Cells are inaccessible to workers but airborne release may impact the collocated workers and/or public.

Some parts of Node 1 are access controlled for short-term activities, such as maintenance and operating surveillance. These areas include the Pump and Valve Galleries (P&VGs), CSSX Contactor Operating Deck, CSSX Contactor Support Floor Area, CSSX Contactor Drop Area and West CSSX Tank Cell, and Laboratory Hot Cell. Other areas of Node 1 such as the CPA Support Areas and Laboratory Areas have lower hazardous material quantities. Airborne releases may impact the worker, collocated worker, and/or public as well as ionizing radiation with direct impact to the worker.

Node 2 encompasses the AFF process and support systems. In single strike and multi-strike mode, the AFF has lower hazardous material quantities than Node 1. Airborne releases may impact the worker, collocated worker, and/or public as well as ionizing radiation with direct impact to the worker.

Node 3, the Cold Chemicals Area (CCA) has the bulk chemicals used to support the ASP, CSSX, and ASP. No radiological materials are present in Node 3. Node 4 includes the dedicated Facility Support Areas with no radiological materials; whereas Node 5 includes significant facility systems without reference to physical location. Node 6 includes support areas external to the main building and Node 7 reflects nearby facilities with a potential to impact SWPF operations based on proximity.

#### 3.3.1.1.2 Hazard Identification Process

Following a systematic approach, a formal HI was executed utilizing a HI Checklist. The Checklist technique was deemed appropriate based on the hazards and complexity of the process. The HI was conducted in accordance with, DOE-STD-3009-1994, Change Notice No. 3[10], and *Guidelines for Hazard Evaluation Procedures - Third Edition*[14]. The HI Checklists systematically identified hazards for each Node/Sub-Node in association with the SWPF. The HI Checklists are incorporated herein by reference from the SWPF HA (V-PHR-J-00007[2]).

Initial input to the HI Checklists was based on existing SWPF documentation. These documents provided the input for the review of building structure, facility systems, equipment types, process activities and operational hazards at the SWPF.

- P-DB-J-00003, *SWPF Process Basis of Design*[15];
- P-DB-J-00004, *SWPF Balance of Plant Basis of Design*[16];

- P-ESR-J-00011, *SWPF Operations Requirements Document*[17]
- P-SAR-J-00001, *SWPF Safety Analysis Mass Balance Run*[18];
- P-SYD-J-00001, *SWPF Sequence of Operations*[19];
- M-M5-J-0001, *SWPF Simplified Process Flow Schematic (U)*[20]; and
- SWPF Chemical Compatibility Chart.

HI Checklists were field-verified at the SWPF through formal HI and verification walkthroughs. Each accessible room of the SWPF, support structures, and exterior were evaluated. Hazards present in each Node and Sub-Node appear on each of the corresponding HI Checklists provided in Appendix B of the SWPF HA (V-PHR-J-00007[2]).

#### 3.3.1.1.3 Screening of Common Hazards

As documented in the SWPF HA (V-PHR-J-00007[2]), the SIH Screening step enables a screening of hazards, otherwise covered by 10 CFR 851, *Worker Safety and Health Program*[21], from moving forward in the HE process to the UCS and subsequently to the QRA.

A hazard is considered SIH if governed by code, regulation, or consensus standard and is routinely encountered in general industry and construction. The SIH Screen focuses analysis efforts on events with the potential for appreciable impact to the Public, Worker, and Collocated Worker receptors that are not otherwise addressed by code, regulation, or consensus standard.

Following a systematic approach, the SWPF HA (V-PHR-J-00007[2]) executed a SIH HI screen utilizing the HI Checklist. The Checklist technique was deemed appropriate based on the hazards and complexity of the process. The SIH Screen was conducted in accordance with DOE-STD-3009-1994, Change Notice No. 3[10], and *Guidelines for Hazard Evaluation Procedures - Third Edition*[14].

The SIH Screening Criteria used for the SWPF HA (V-PHR-J-00007[2]) are provided in Table 3.7-3.

In the SIH screen, hazards were evaluated and screened based on the potential to initiate or contribute to the release of material or other hazards. If a hazard did not fall below the SIH Screening Criteria, the hazard was carried forward for additional analysis within the HE. If a hazard did fall below the Screening Criteria, the hazard was further evaluated for feasibility of a PIE. If a hazard fell below the SIH Screening Criteria but was determined to be a PIE, the hazard was carried forward for additional analysis within the HE.

As a result of the SIH Screen, a number of hazards screen out and do not carry further into the analysis because hazards are not present above threshold quantities, hazards are not attributed with the potential to initiate the release of other radiological or hazardous materials of concern, or the areas contained no significant hazards of concern.

The final product of the HI Screening task is a set of hazards that exceed the SIH screening guidelines. If the process determined that a hazard warranted further consideration, the hazard was carried forward for additional analysis within the HE.

#### 3.3.1.2 Hazard Evaluation

This Subsection presents the basic approach and guidance used for generating the qualitative consequence and likelihood estimates in HE as well as the consequence screening logic used to focus the analysis on hazards with a potential to significantly impact receptors. This Subsection also presents the method for binning events into common event types versus referencing individual events. The appropriateness of the overall methods used to evaluate hazards is presented and justified in this Subsection.

##### 3.3.1.2.1 What-If/Checklist

Given the inherent nature of the SWPF operations, hazards present, complexity, and size of the process, the primary chosen HE method was a What-if/Checklist, together with a QRA. The SWPF operations include potential releases of hazardous materials as a result of equipment failures, worker/control operator error, and external events. The SWPF operations include a significant number of equipment and a significant number of SOPs.

As an example, a significant number of equipment managed by the Basic Process Control System (BPCS) includes approximately 1,400 valves, 128 pumps, and 36 contactors. As an example, the SWPF operations include a significant number of hard piped equipment with approximately 84 tanks/vessels, 57 filters, 18 vessel agitators, 16 heat exchangers as well as 7 ventilation systems. All of the equipment is interrelated and interdependent on facility-level systems. The significant number of SOPs include hundreds of operating and maintenance procedures.

Performing a Hazard and Operability Review (HAZOP) on all procedures and/or performing a Failure Modes and Effects Analysis on all of the equipment would not yield manageable results. Whereas, the What-if/Checklist provides a broad brush technique that can yield manageable results for both worker error (i.e., procedures) and equipment failures (i.e., equipment). The What-if/Checklist technique combines the critical thinking and creative brainstorming features of the What-if analysis method with the systematic features of the Checklist method. The purpose of the What-if/Checklist analysis is to identify hazards, consider the general types of incidents that can occur, qualitatively evaluate the effects, and derive Preventive and Mitigative controls to protect against the loss event. The What-if/Checklist technique derived human error, equipment failures, and Natural Phenomena Hazard (NPH) initiators in all event categories. Following the derived Checklist, the results of the What-if/Checklist generates a table of events with causes, effects, and controls. Further information on the What-if, Checklist, and What-if/Checklist HE techniques can be found in *Guidelines for Hazard Evaluation Procedures - Third Edition*[14].

Based on the HI, the hazards carried forward for analysis are used as a checklist, along with human error, equipment failure, and NPH initiators for all event types. The Checklist was used

during the series of HE meetings that took place over a period of 5 days with a multidisciplinary team. What-if/Checklist HE meetings held in January 2018 with Parsons SWPF Subject Matter Experts (SMEs) and members of the DOE Safety Basis Review Team followed a systematic approach. As the outcome of the HE meetings, the SWPF What-if/Checklist HE tables are based on the output from the HI worksheet; results of the hazard screening; and process knowledge held by SWPF staff and various SMP SME inputs. The HE meetings systematically identified potential events for each of the Nodes in association with the SWPF. Nodes were grouped into like areas of the SWPF to streamline the HE and HA process. Sub-Nodes further divided areas within the SWPF for clarity.

For the HE, events are categorized and binned according to event types within each of the Nodes/Sub-Nodes. Event types include spills, (pressurized) sprays, vessel aerosolizations, fires, explosions, and external events including NPH. Where appropriate, criticality events are addressed in the HE tables within Appendix D of the SWPF HA (V-PHR-J-00007[2]).

#### 3.3.1.2.2 Consequence Assignments

For the What-if/Checklist HE, consequence determinations are assigned by receptor for each event. Receptors are defined in Table 3.7-4.

Consequence determinations are assigned for each of the receptors for each event; each event reflects a potential, qualitative consequence for the Worker, Collocated Worker, and Public receptors. Each event reflects a consequence for the Worker, Collocated Worker, and Public according to Table 3.7-5. The SWPF events were assigned a consequence as provided in Appendix C of the SWPF HA (V-PHR-J-00007[2]).

#### 3.3.1.2.3 Unmitigated Consequence Screen

Based on the output of the What-If/Checklist method, an UCS is applied. The UCS step enables the analyst to screen events, based on unmitigated consequence, from moving forward in the HE process to the QRA. The UCS focuses analysis efforts on events with the potential for appreciable impact to the Public, Worker, and Collocated Worker receptors – based on DOE-STD-3009-1994, Change Notice No. 3[10] requirements. Events are sorted and screened based on narrative from DOE-STD-3009-1994, Change Notice No. 3[10]. Qualitative consequence assignments of High, Moderate, and Low are based on the calculated Material-at-Risk (MAR) together with the event types (i.e., spills, sprays, fires, explosions, external events, and NPH). Worst case values for each Node are taken from engineering calculations specific to each tank (e.g., MAR and release estimates), however, only the worst case release for the given Node are used to define consequence determinations for the entire Node.

Events assigned High or Moderate consequences to the Public carry forward into the QRA for control derivation. Events assigned a High consequence to the Collocated Worker or Worker carry forward into the QRA for control derivation. Events assigned Low or Negligible consequences to the Public do not carry into the QRA. Events assigned Moderate, Low, or

Negligible consequences to the Worker or Collocated Worker are screened and do not carry into the QRA. Only those events carried into the QRA are used to derive credited controls.

The SWPF events were assigned a consequence as provided in Appendix C of the SWPF HA (V-PHR-J-00007[2]).

#### 3.3.1.2.4 Qualitative Risk Analysis

Hazards carried forward from the consequence screen were evaluated using the QRA technique. The QRA is a tool used to derive the controls necessary to prevent or mitigate a loss event. The SWPF loss events include radiological and non-radiological material releases as a result of the event types.

Together with the unmitigated consequence, the unmitigated frequency is used to assign an unmitigated risk (e.g., consequence x frequency = risk) through the use of the Risk Matrix. Preventive controls are used to reduce frequency and Mitigative controls are used to reduce consequence. Controls are credited for a reduction in either frequency or consequence until an acceptable risk level is achieved. As the output of the QRA, these derived controls establish the SB of SWPF.

The Risk Matrix is key to the QRA approach to disposition assignments of frequency and consequence – thereby risk, and the rationale for the selection of controls.

**Unmitigated Frequency Assignment**

Table 3.7-6, provides the Qualitative Frequency Matrix used to develop estimates of the potential frequency of occurrence for specific events, as they are considered over the life of the SWPF. Generally, a given event is evaluated for an initiating event caused by a human error, mechanical/equipment failure, natural phenomena, and/or fire/explosions. Each type of initiating event is provided a qualitative frequency. Note, external events are not assigned a qualitative frequency because none of the events result in an unmitigated consequence exceeding the screening threshold for the given receptors.

Human Errors Events. Events initiated by human errors are Anticipated (A) to occur several times during the lifecycle of the SWPF. Human error events include errors caused by maintenance Workers and errors caused by the Control Room (CR) Operators. These human error initiated events are assigned an unmitigated frequency of Anticipated (A) in Appendix D HE tables of the SWPF HA (V-PHR-J-00007[2]). Typically, an SOP is credited for a reduction in frequency together with an EC credited for reducing the consequence of the loss event.

Equipment Failure Events. Events initiated by mechanical/equipment failures are Unlikely (U) to occur during the lifecycle of the SWPF because of highly engineered systems. Mechanical failure events include failures of vessels, piping, valves, pumps, ventilation systems, and control systems. These mechanical failure initiated events are assigned an unmitigated frequency of Unlikely (U) in Appendix D HE tables of the SWPF HA (V-PHR-J-00007[2]). Typically, ECs are credited for either preventing or mitigating the loss event.

NPH Events. Events initiated by natural phenomena are qualitatively assigned a frequency of Unlikely (U). Natural phenomena initiated events include seismic, tornado, high wind, and flooding impacts on the SWPF systems. These impacts include failures of vessels, piping, valves, pumps, ventilation systems, and control systems. These natural phenomena initiated events are assigned an unmitigated frequency of Unlikely (U) in Appendix D HE tables of the SWPF HA (V-PHR-J-00007[2]). Typically, ECs are credited for mitigating the loss event and/or credited for preventing the loss event initiated by the NPH.

Fire/Explosion Events. Fire and explosion events associated with the SWPF reflect events associated with the combustible solvent and/or hydrogen ($H_2$) generated by the radiolysis of the process stream. Typically events are evaluated without determining how the specific ignition occurs – the initiation is assumed to occur. Fire events are qualitatively assigned a frequency of Unlikely (U) and explosive events are qualitatively assigned a frequency of Extremely Unlikely (EU) – qualitatively it is relatively more difficult to create the necessary conditions for an explosion than a fire. Typically, ECs are credited for either preventing or mitigating the loss event.

**Unmitigated Risk Assignment**

The acceptable risk level for the SWPF QRA is a Risk Rank or Risk Level of III. The Risk Matrix, shown in Table 3.7-7 is used to derive the Risk Rank. The Risk Matrix is key to the QRA methodology for dispositioning assignments of frequency, consequence, and risk as the basis for deriving controls.

The Risk Rank is applied to individual events carried through the UCS. Consequence values are assigned by receptor (i.e., Worker, Collocated Worker, and Public), whereas unmitigated frequency values are assigned by the event.

Frequency and Consequence combine to yield a “risk ranking” defined by “bin” numbers (I through IV). For those events with an unmitigated risk value of less than III, controls are identified following the hierarchy of controls to either reduce the frequency “binning” or the consequence “binning” to an acceptable level of risk (i.e., III or IV). Both unmitigated and mitigated events are ranked and evaluated using the same Risk Matrix.

To use the Risk Matrix, the unmitigated Frequency for a given event is selected together with the unmitigated consequence for each receptor to derive the corresponding unmitigated Risk Level of I, II, III, or IV. If the Risk Level is acceptable (i.e., Risk Level III or IV), the event is not analyzed further. If the Risk Level is unacceptable (i.e., Risk Level I or II), the event is analyzed further.

**Mitigated Risk Assignment and Control Derivation**

Preventive controls are evaluated for frequency reductions and Mitigative controls are evaluated for consequence reductions. A single control is “credited” for a single “bin drop” in either frequency or consequence. The Mitigated frequency for the given event is selected together with the Mitigative consequence to derive the corresponding Mitigated Risk Level. Controls are

"credited" until the Mitigated Risk Level is acceptable (i.e., Risk Level III or Risk Level IV) for each receptor. The HE QRA Tables within Appendix D of the SWPF HA (V-PHR-J-00007[2]), document the Unmitigated Frequency, Unmitigated Consequence, and Unmitigated Risk; the assignment of Preventive and Mitigative controls; and the Mitigated Frequency, Mitigated Consequence, and Mitigated (residual) Risk.

As presented in the SWPF HE QRA Tables located in Appendix D of the SWPF HA (V-PHR-J-00007[2]), Preventive and Mitigative controls are selected using a judgment-based process considering a standard controls hierarchy. The judgment-based process for control selection strategy to address reduce risks is based on the following order of preference.

- Elimination of hazardous material (including radioactive and non-radioactive) without adversely impacting the required processes.
- Minimization of hazardous material (including radioactive and non-radioactive) without adversely impacting the required processes.
- EC to control the hazard and/or effects of the hazard from Worker, Collocated Worker, or Public.
  - Preventive preferred over Mitigative.
  - Passive preferred over Active.
- AC to ensure the work process is protective of the Worker, Collocated Worker, or Public from effects of the hazard.
  - Preventive preferred over Mitigative.
- Warning signs, audible alarms, and/or visual alarms are methods to warn Workers of a (potential) hazardous event.

Generally, an acceptable risk level of III represents a reasonably low risk and other DID and/or DID/ITS controls may reduce risk further. The inherent risk is evaluated for a risk reduction by applying ECs and/or ACs.

For those events with a risk level of I or II, controls are identified to either reduce the frequency binning or the consequence binning. Preventive controls are applied prior to a loss event – reflecting a frequency reduction and Mitigative controls are applied after a loss event – reflecting a consequence reduction. Each control is credited for a single "bin drop" either in frequency or consequence. Following a standard control hierarchy, controls are applied until the residual risk is acceptable – reflecting a Mitigated Risk level of III or IV. With use of the Risk Matrix, generally at least two (2) or three (3) controls are necessary to reduce risks to acceptable levels (i.e., Risk Rank III or IV).

A significant effort was completed to identify both DID and DID/ITS controls. DID is a fundamental approach to hazard control based on layers of protection. These protective layers are generally redundant and ideally independent of each other.

The SWPF events were assigned an unmitigated risk and mitigated risk as provided in Appendix D of V-PHR-J-00007[2]

### 3.3.2 Hazard Analysis Results

This Section presents the results of the HA activity performed in the execution of the SWPF HA (V-PHR-J-00007[2]). The SWPF HA (V-PHR-J-00007[2]) is an integral part of a holistic and systematic approach to supporting this DSA and managing the operations of this HC-2 Nuclear Facility. The SWPF HA (V-PHR-J-00007[2]) reflects a traditional HI and HE, together with a QRA to derive controls. Several screening methods are employed to reflect the primary purpose of the SWPF HA (V-PHR-J-00007[2]), to right-size and narrow the focus of controls to those credited for a reduction in risk. The SWPF HA (V-PHR-J-00007[2]) provides the documentation of controls which are credited for reducing operational risks at and carried forward into this DSA. Further explanation of the methodology employed to execute the SWPF HA (V-PHR-J-00007[2]) is located in Section 3.3.1 of this DSA and in Section 3.0 of the SWPF HA (V-PHR-J-00007[2]). The full discussion of SWPF HA (V-PHR-J-00007[2]) results are located in the SWPF HA (V-PHR-J-00007[2]).

#### 3.3.2.1 Hazard Identification Results

This Subsection presents the results of the HI activity performed as a function of the SWPF HA (V-PHR-J-00007[2]). This Subsection also presents the results of an analysis of historical accidents or hazardous situations in association with the facility's operating history. HI Checklists (data sheets) for each Node and Sub-Node can be found in Appendix B of the SWPF HA (V-PHR-J-00007[2]). Table 3.7-8 provides a summary of the hazards identified by form, type, location, and total quantity for the SWPF Nodes/Sub-Nodes with the Hazards carried forward for analysis from the HI Checklists (data sheets) within Appendix B of the SWPF HA (V-PHR-J-00007[2]). These identified hazards are greater than SIH screening criteria and/or identified as a PIE for the release identified. For more detailed information regarding hazard form, type, location, and total quantity; including SIH screen, refer to Appendix B of the SWPF HA (V-PHR-J-00007[2]).

The hazards listed in Table 3.7-8 were qualitatively analyzed within the SWPF HA (V-PHR-J-00007[2]) and determined to have a High unmitigated consequence to the Worker, or a High or Moderate unmitigated consequence to the Collocated Worker or Public through the UCS Process.

For more detailed information regarding the UCS, refer to Appendix C of the SWPF HA (V-PHR-J-00007[2]). Quantitative values for radiological materials in each of the SWPF process vessels have been derived and are listed in S-CLC-J-00029, *Radionuclide Concentrations in Process Vessels*[22]. For more detailed information regarding the vessel-specific radiological materials and nuclide concentrations, refer to S-CLC-J-00029[22].

The primary hazard of concern is radiological material. The primary vessels associated with the ASP operation are provided in Table 3.7-9. The list of vessels includes the vessel volume, total quantity of Cs-137, total quantity of Pu-238, and additional pertinent process information. The

total quantity of Cs-137 and Pu-238 is provided as representative constituents of radiological materials based on normal operations.

The primary vessels associated with the CSSX operation are provided in Table 3.7-10. The list of vessels includes the vessel volume, total quantity of Cs-137, total quantity of Pu-238, and additional pertinent process information. The total quantity of Cs-137 and Pu-238 is provided as representative constituents of radiological materials based on normal operations.

The primary vessels associated with the AFF operation are provided in Table 3.7-11. The list of vessels includes the vessel volume, total quantity of Cs-137, total quantity of Pu-238, and additional pertinent process information. The total quantity of Cs-137 and Pu-238 is provided as representative constituents of radiological materials based on normal operations.

The primary vessels associated with the CCA operation are provided in Table 3.7-12. The list of vessels includes the tank contents together. All vessels are Performance Category (PC)-1 constructed.

The attributes of hazards identified in this Section are the basis for subsequent HE and AA. This basic set of hazards identified radiological materials (radionuclides/ionizing radiation) and hazardous chemicals (combustibles, flammables-propane, asphyxiates).

Electrical, hot work/open flame, physical impact/kinetic energy, internal flooding (process water), pressure, reactions/incompatibility (radiolysis), and thermal hazards are referred to as PIEs. PIEs may influence accident progression involving such materials and/or initiate a release of the Process Stream (radiological materials) or other hazardous materials. Flammable solvents are not used in large quantities in association with the SWPF Process Stream.

Flammable chemicals used in association with SWPF activities are primarily attributed to lab-scale testing and analytical laboratory chemistry, common household chemicals, or materials of trade. Explosive materials are not within the scope of SWPF activities.

Because the SWPF is a new facility, there are no historical accidents or hazardous situations in association with the facility's operating history. As such, an evaluation of previous incidents within select SRS facilities and Parsons activities were evaluated for potential for catastrophic consequences. This evaluation focused on select accidents and unplanned events over the past five (5) years relevant to the SWPF HE. Table 2-5 in the SWPF HA (V-PHR-J-00007[2]) provides general summary by type with emphasis on the major occurrences for select events identified as relevant to the SWPF. Each of the selected incidents with a potential for a release of hazardous material was evaluated for PIEs and/or failure modes for the SWPF HA (V-PHR-J-00007[2]).

### 3.3.2.2 Hazard Categorization

This Section provides a summary of the SWPF Hazard Categorization per DOE-STD-1027-92, Change Notice No. 1[4]. The SWPF is categorized as a HC-2 Nuclear Facility, based on potential for MAR and criteria specified in DOE-STD-1027-92, Change Notice No. 1[4]. A facility hazard categorization was performed as specified in DOE-STD-1027-92, Change Notice No. 1[4].

Radioactive isotopic inventories for SWPF were based on the assumed inventory of the facility for the seismic event described later in this Subsection. The SWPF hazard categorization is based on the facility MAR, without consideration for facility-specific Airborne Release Fractions (ARFs) and Respirable Fractions (RFs).

The SWPF is an HC-2 Nuclear Facility, based on the estimated inventory of Cs-137 alone. Additionally, because of the batching/accumulation and actinide-concentrating mechanism, the Plutonium (Pu)-238 inventory also grossly exceeds the DOE-STD-1027-92, Change Notice No. 1[4] HC-2 threshold. The SWPF has other radioisotopes that, if accounted for, would further increase the margin by which the HC-2 threshold is exceeded. The SWPF is not a HC-1 facility because the radioactive isotopic inventories are not sufficient to produce significant offsite consequences, the SWPF is not a Category A reactor, and the DOE Program Secretarial Officer has not designated the SWPF as such.

The location of J-Area for the SWPF is adequately separated from other facilities, such that external facility events should not physically impact the SWPF. Conversely, events at the SWPF should not impact other facilities' MAR. Facility segmentation was not used in the determination for final hazard categorization for the SWPF. The SWPF boundaries include the entire SWPF CPA and underground waste transfer lines up to the seal plate outside the SWPF Waste Transfer Enclosure (WTE); at this point the waste transfer line is within the boundary of the facility supplying or receiving the waste stream.

#### 3.3.2.3 Hazard Evaluation

This Subsection describes the results of the HE. Appendix D of the SWPF HA (V-PHR-J-00007[2]) contains the SWPF HE tables and characterizes the identified hazards in the context of the actual facility and process. The SWPF HE tables located in Appendix D of the SWPF HA (V-PHR-J-00007[2]) qualitatively evaluate each of the hazards carried forward from the HI, SIH Screen, and UCS for further evaluation. The SWPF HE tables located in Appendix D of the SWPF HA (V-PHR-J-00007[2]) clearly identify both preventive and mitigative controls for each event. The derived mitigative controls reduce potential consequences, while the derived preventive controls reduce potential frequencies.

Given the inherent nature of the SWPF operations, hazards present, complexity, and size of the process, the primary chosen HE method was a What-if/Checklist. For more detailed information regarding the What-if/Checklist HE technique, refer to *Guidelines for Hazard Evaluation Procedures - Third Edition*[14]. The *Guidelines for Hazard Evaluation Procedures - Third Edition*[14], provide acceptable guidelines for selecting HE techniques and generic lists of initiators that need to be incorporated in systematic evaluation with a given technique.

Public and worker safety issues are the traditional focus of the HE. Section 3.3.2.3.4 of this DSA examines the potential for large-scale environmental contamination. The information on environmental contamination was developed in a separate analysis that concluded the SWPF would not have significant environmental impact. Section 3.3.2.3.3 of this DSA also examines Worker safety issues. Worker safety issues are integrated into the SWPF HA (V-PHR-J-00007[2]).

Although the SWPF HA (V-PHR-J-00007[2]) identifies several hazards as SIH, some are still carried forward into the SWPF HE tables located in Appendix D of the SWPF HA (V-PHR-J-00007[2]) because they are considered PIEs for the release of radiological or other hazardous materials.

The SWPF HA (V-PHR-J-00007[2]) presents potential accidents in terms of event types. Event types evaluated in the SWPF HA (V-PHR-J-00007[2]) are as follows:

- Fire (E-1): Consequences typically due to inhalation of released hazardous material.
- Explosion (E-2): Consequences typically due to inhalation of released hazardous material.
- Loss of Containment/Confinement (E-3): Consequences typically due to inhalation of released hazardous material.
- Direct Radiological/Chemical Exposure (E-4): Consequences typically due to inhalation of released hazardous material.
- Nuclear Criticality (E-5): Consequences typically due to direct external exposure from, or inhalation of fission products.
- External Hazards (E-6): Consequences typically due to inhalation of released hazardous material. Depending of specific event, direct exposure may also be applicable.
- Natural Phenomena (E-7): Consequences typically due to inhalation of released hazardous material. Depending on specific event, direct exposure may also be applicable.

Because of the a large number of events derived in the SWPF HE tables located in appendix D of the SWPF HA (V-PHR-J-00007[2]), simple summaries of the different event types are provided below, in the text of this chapter. The detailed HE tables generated in the performance of the HE are located in Appendix D of the SWPF HA (V-PHR-J-00007[2]).

**Fire (Event Category E-1)**

Fire events are of concern because of consequences to the Worker, Collocated Worker, and Public typically due to inhalation of released hazardous material. Hazardous material associated with the process stream includes radiological and non-radiological constituents.

Fire release events for the SWPF reflect in-vessel fires as well as fires following leaks/spills in the ASP process cells, CSSX process cells, CSSX process areas, P&VG labyrinths, and AFF. Events associated with the CCA, Analytical Laboratory, and supporting areas are also considered. Process vessel aerosolization/vapor space fires are identified within the E-1 (Fire) Event Category.

Fires need fuel, oxygen, and ignition to occur. Fuel for fire events associated with the SWPF include the combustible solvent and vessel flammable vapors. While ignition of in-vessel fires with a flammable vapor space are credible, ignition of in-vessel pool fires with a combustible

solvent are a non-credible event because a viable, sustained ignition source is not present in the process vessels.

Atmospheric oxygen is readily available; however, fires would generally be oxygen limited in the process vessels. Typical ignition sources of electrical, chemical reaction, criticality, hot work, open flame/fire, static charge, and thermal were considered. However, events are evaluated without determining how the specific ignition occurs – the ignition is assumed to occur. Fire events are qualitatively assigned a frequency of Unlikely (U).

Generally, the consequences of the fire event reflect the release of the MAR from the process stream. The non-radiological constituents do not have consequence of concern to the receptors whereas the radiological constituents have consequences of concern for all of the receptors – Worker, Collocated Worker, and Public. Consequences associated with fires typically follow the radiological MAR – with higher values in the ASP areas and as the Actinides are reduced, decreasing values in CSSX areas. Then as Cs-137 is reduced in the CSSX areas, the MAR is significantly lower in the AFF for a single strike. If a second (multi) strike is necessary, the MAR will increase as the process stream is filtered and concentrated. As expected, fires associated with vessels concentrating radiological materials have increased consequences.

The ASP process cells and vessels were constructed to preclude ignition sources. Static charges from liquid flow through a pipe may be the only feasible ignition source in the "dark cells." Static charge is a potential for a flammable fluid with high flow rates through non-conductive materials; the SWPF process stream is generally only combustible (not flammable), the SWPF flow rates are generally low velocities, and the SWPF vessels/piping are stainless steel and grounded. Therefore, ignition of fires is not expected. The CSSX process cells reflect the design and construction of the ASP process cells. However, the CSSX operating area and the AFF areas generally have ignition sources because of electrical equipment. The SWPF engineered safety was to reduce the potential of fires in the areas of higher MAR (i.e., consequence).

The SWPF strategy for controlling vapor space fires is to prevent the buildup of fuel in the process vessels – the fuel includes the $H_2$ gas from radiolysis and raw organic solvent, albeit combustible. Because $H_2$ gas generation is unavoidably a result of the normal processing, the control strategy is to keep the head space of the vessel below Lower Flammability Limits (LFLs). The first strategy is to prevent the retention of $H_2$ in the tank bottom stream through mixing of the process stream with active and passive methods. The Plant Air System (PAS) – Air Pulse Agitators (APAs), mechanical agitators, and eductors as well as pumping the tank contents are methods to ensure that mixing releases the $H_2$ over time rather than in short bursts.

The second strategy is to prevent the buildup of $H_2$ in the head space through layered ventilation with both active and passive methods. The Air Dilution System (ADS) provides a flow of air into each vessel where ignitable vapors are of concern. There are Vessel Ventilation Systems in the ASP, CSSX, and AFF. In the ASP and CSSX, the PVVS actively ventilates the head space of the vessels where ignitable vapors are of concern. In the AFF, the AFF Vessel Ventilation System passively ventilates the head space of the vessels where explosions are of concern.

Fires are considered for spill events into the cells/dikes in addition to vessel fires. From an upset condition, the process stream may spill into a cell or diked area – assuming the spill accumulates and ignites. Sumps or sump drain lines ensure that a buildup of the process stream cannot accumulate in the cell/dike areas.

Albeit combustible and not flammable, the CSSX solvent contributes to the potential for fires. The SWPF has a limited quantity of solvent used in the process system and utilizes the Solvent Removal Program to ensure solvent is recovered rather than allowed to build up in process vessels. A primary strategy to control fires is to ensure the process stream does not increase in temperature as a result of pumping from the filtering processes. An increase in process stream temperature could result in an increase in solvent flammability thereby contributing to a fire event. Ensuring the process stream does not increase in temperatures above or near the LFL of the solvent helps to prevent fires/explosions.

Additionally, the process vessels are grounded/bonded and constructed out of conductive materials to avoid the creation of static charge in the vessels which could be a potential ignition source. In the tanks with the highest $H_2$ generation rates, the "dark cells" do not have any other method of ignition besides static charge from fluid flow.

To reduce the consequences to the Collocated Worker and Public, each of the ventilation systems are High-efficiency Particulate Air (HEPA)-filtered to mitigate the release of radiological materials in a fire. The Distributed Control System (DCS); both the BPCS and the Safety Instrumented System (SIS), provide important controls to prevent fires.

**Explosion (Event Category E-2)**

Explosion events are of concern because of consequences to the Worker, Collocated Worker, and Public typically due to inhalation of released hazardous material. Hazardous material associated with the process stream includes radiological and non-radiological constituents. Explosion release events for the SWPF reflect in-vessel explosions.

As the E-2 Event Category, explosions include detonations – energetic events with pressure waves greater than the speed of sound. The consequences of the explosive events are based on the energy potential to release the MAR and not the potential overpressure damage to equipment.

As with fires, explosions need fuel, oxygen, and ignition to occur. Explosion events associated with the SWPF reflect events associated with the combustible solvent and/or $H_2$ gas generated by the radiolysis of water and organics in the process stream. If $H_2$ and organics are allowed to accumulate in the vapor spaces of process vessels or other components, the mixture of gases can potentially reach explosive conditions.

Atmospheric oxygen is readily available; however, explosions would generally be oxygen limited in the process vessels. Typical ignition sources of electrical, chemical reaction, criticality, hot work, open flame/explosion, static charge, and thermal were considered. However, events are evaluated without determining how the specific ignition occurs – the ignition is assumed to occur. Explosion events are qualitatively assigned a frequency of Extremely Unlikely (EU).

Generally, the consequences of the explosion event reflect the release of the MAR from the process stream. Generally, the non-radiological constituents do not have a High consequence to the receptors whereas the radiological constituents have consequences of concern for the Worker, Collocated Worker, and Public. Consequences associated with explosions typically follow the radiological MAR – with higher values in the ASP areas, and as the Actinides are reduced, decreasing values in CSSX areas. Then as Cs-137 is reduced in the CSSX areas, the MAR is significantly lower in the AFF for a single strike. If a second (multi-) strike is necessary, the MAR will increase as the process stream is filtered and concentrated.

The radiolysis generation rate of $H_2$ in the SWPF process stream is based on the energy associated with ionizing radiation – higher concentrations of radiological material with ionizing radiation result in higher rates of radiolysis. The ASP reduces the Actinides in the salt waste stream passing on through CSSX and AFF areas and therefore, generally reduces the rate of radiolysis in the CSSX and AFF vessels containing the salt waste stream. In CSSX, the extracted Cs-137 passes from the solvent into the strip effluent stream.

Note, vessels receiving the filtered process stream concentrate ionizing radionuclides and therefore, have higher radiolysis rates. The ASP has higher rates of radiolysis and therefore, more $H_2$ gas is generated. The higher MAR and the higher generation rate of $H_2$ gas result in higher consequences of the fire events. In CSSX, the extremely high Cs-137 concentrations in the strip effluent results in the highest generation rates in SWPF; however, the radiological consequences of an explosion involving strip effluent are not high due the absence of Actinides.

The ASP process cells and vessels were constructed to preclude ignition sources. Static charges from liquid flow through a pipe may be the only feasible ignition source in the “dark cells.” Static charge is a potential for a flammable fluid with high flow rates through non-conductive materials; the SWPF process stream is generally only combustible (not flammable), the SWPF flow rates are generally low velocities, and the SWPF vessels/piping are steel and grounded. The CSSX process cells reflect the ASP process cells. The CSSX operating area and the AFF areas generally have nearby and/or in-vessel ignition sources.

The SWPF engineered safety was to reduce the potential of explosions in the areas of higher MAR (i.e., consequence). In addition, as an Initial Condition (IC), Workers are excluded from the “dark cells” and therefore, the consequences to the Worker receptor in the ASP/CSSX process cells are not evaluated.

The SWPF strategy for controlling process explosions reflects the control strategy for fires. The SWPF strategy for process explosions is to prevent the buildup of fuel in the process vessels – the fuel includes the $H_2$ gas from radiolysis and raw organic solvent, albeit combustible. Because $H_2$ gas generation is unavoidably a result of the normal processing, the control strategy is to keep the head space of the vessel below LFLs. The first strategy is to prevent the retention of $H_2$ in the tank bottom stream through mixing of the process stream with active and passive methods. The PAS – APAs, mechanical agitators, and eductors as well as pumping the tank contents are methods to ensure that mixing releases the $H_2$ over time rather than in short bursts.

The second strategy is to prevent the buildup of $H_2$ in the head space through layered ventilation with both active and passive methods. The ADS provides a flow of air into each process vessel where ignitable vapors are of concern. There are Vessel Ventilation Systems in the ASP, CSSX, and AFF. In the ASP and CSSX, the Process Vessel Ventilation System (PVVS) actively ventilates the head space of the vessels where explosions are of concern. In the AFF, the AFF Vessel Ventilation System passively ventilates the head space of the vessels where explosions are of concern.

Albeit combustible and not flammable, the CSSX solvent contributes to the potential for explosions. The SWPF has a limited quantity of solvent used in the process system and utilizes the Solvent Removal Program to ensure solvent is recovered rather than allowed to build up in process vessels. A primary strategy to control fires is to ensure the process stream does not increase in temperature as a result of pumping from the filtering processes. An increase in process stream temperature could result in an increase in solvent flammability thereby contributing to a fire event. Ensuring the process stream does not increase in temperatures above or near the LFL of the solvent helps to prevent fires/explosions.

Additionally, the process vessels are grounded/bonded and constructed out of conductive materials to avoid the creation of static charge in the vessels as an ignition source. In the tanks with the highest $H_2$ generation rates, the “dark cells” do not have any other method of initiation besides static charge from fluid flow.

To reduce the consequences to the Collocated Worker and Public, each of the ventilation systems are HEPA-filtered to mitigate the release of radiological materials in an explosion. The DCS; both the BPCS and SIS, provide important controls to prevent explosions.

**Loss of Confinement (Event Category E-3)**

Loss of confinement events are of concern because of consequences to the Worker, Collocated Worker, and Public typically due to inhalation of released hazardous material. Hazardous material associated with the process stream includes radiological and non-radiological constituents. Generally, loss of confinement release events for the SWPF reflect spills, sprays, and aerosolized releases associated with the process vessels, pumps, valves, and piping in each of the ASP, CSSX, and AFF areas as well as the P&VG Labyrinths. Events associated with the CCA, Analytical Laboratory, and supporting areas are also considered.

**Aerosolization**. The use of compressed air to agitate the process vessels could result in the direct interaction of a pressurized air jet with the surface of the liquid in the vessels and subsequent aerosolization of the process stream. The failure of an agitator air line or the failure of a discharge nozzle above the liquid surface could result in an aerosolization of the process stream.

**Sprays**. Pressurized releases associated with pumps are also considered. Both centrifugal and positive displacement pumps are used to transfer the process stream from vessel to vessel and through filters. A leak from the pump discharge could result in the release of a pressurized process stream spray.

**Spills**. Transferring the process stream between vessels through piping, valves, and pumps could result in spills resulting in a release either from a non-pressurized leak or from a vessel overflow/failure.

Spills, sprays, and aerosolization releases result in both E-3 (loss of confinement) and E-4 (direct) events. Direct events with radiological material releases generally reflect an ionizing radiation dose to workers.

Generally, the consequences of the loss of confinement event reflect the release of the MAR from the process stream. Generally, the non-radiological constituents do not have a High consequence to the receptors whereas the radiological constituents have consequences of concern for the Worker, Collocated Worker, and Public. Consequences associated with loss of confinement typically follow the radiological MAR – with higher values in the ASP areas and as the Actinides are reduced, decreasing values in CSSX areas. Then as Cs-137 is reduced in the CSSX areas, the MAR is significantly lower in the AFF. With a reduced MAR, events within the laboratory and other supporting areas have even less consequences especially to the Collocated Worker and Public.

In addition, as an IC, Workers are excluded from the "dark cells" and therefore, the consequences to the Worker receptor in the ASP/CSSX process cells are not evaluated.

Other loss of confinement events include releases from process ventilation systems as well as HEPA filters and process filters during change out. The consequences with these events are primarily Worker consequences, with potential consequences to the Collocated Worker and Public below consequences of concern.

The frequency for loss of confinement events is based on the parameters/context within each release event with human errors resulting in release given an Anticipated (A) frequency and equipment failures given an Unlikely (U) frequency reflective of the initiating event/cause of the release. Loss of confinement events and direct exposure events may be considered in a single event in the SWPF HE tables in Appendix D of the SWPF HA (V-PHR-J-00007[2]).

The SWPF strategy for controlling loss of confinement events is to maintain the robust design and construction of the process vessels, pumps, valves, and piping to prevent failure. In addition, reducing the PIEs – both human error and equipment failure – that could result in loss of confinement are important aspects. Fires, explosions, and NPHs are PIEs. Preventing fires and explosions is an aspect of the control strategy for loss of confinement. Constructing the CPA structure and process vessels to PC-3 standards as well as constructing the AFF/CCA structure and process vessels to PC-1 standards is also an important design feature.

Loss of confinement from process equipment releases is typically contained in nearby sumps that drain to a common vessel. The layered ventilation systems for vessels and operational areas provide control for loss of confinement. In the ASP and CSSX, the PBVS ventilates the tank cells and operational areas. In the AFF, the AFF Ventilation System ventilates the AFF process area. There are also Vessel Ventilation Systems in the ASP, CSSX, and AFF. In the ASP and

CSSX, the PVVS actively ventilates the head space of the vessels where aerosolization, spills, and sprays may happen. In the AFF, the AFF Vessel Ventilation System passively ventilates the head space of the vessels where aerosolization, spills, and sprays may happen.

To reduce the consequences to the Collocated Worker and Public, each of the ventilation systems are HEPA-filtered to mitigate the release of radiological materials in a loss of confinement. The DCS; both the BPCS and SIS, provide important controls for loss of confinement.

**Direct Radioactive/Chemical Exposure (Event Category E-4)**

Direct radioactive/chemical exposure events are of concern because of consequences to the Worker typically due to contact with radiological or chemical materials. Hazardous material associated with the process stream includes radiological and non-radiological constituents. Generally direct exposure events for the SWPF reflect spills, sprays, and aerosolized releases associated with the process vessels, pumps, valves, and piping in each of the ASP, CSSX, and AFF areas as well as the P&VG Labyrinths. Direct exposure consequences also take "shine" into consideration. Events associated with the CCA, Analytical Laboratory, and supporting areas are considered. Exposures to ionizing radiation from nearby operations are also considered.

Spills, sprays, and aerosolization releases result in both E-3 (loss of confinement) and E-4 (direct) events. Direct events with radiological material releases generally reflect an ionizing radiation dose to workers.

As an IC, Workers are excluded from the "dark cells" and therefore, the consequences to the Worker receptor in the ASP process cells and East CSSX Tank Cell are not evaluated.

The frequency for direct exposure events is based on the parameters/context within each release event with human errors resulting in release given an Anticipated (A) frequency and equipment failures given an Unlikely (U) frequency reflective of the initiating event/cause of the release. Direct exposure events and loss of confinement events may be considered in a single event in the SWPF HE tables in Appendix D of the SWPF HA (V-PHR-J-00007[2]).

A SWPF strategy for controlling direct exposure events is shielding from ionizing radiation from both normal and abnormal operations – as well as implementation of As Low As Reasonably Achievable (ALARA) principles through the Radiological Protection SMP. The CPA structure is primarily constructed of thick, reinforced concrete walls that protect Workers from High doses of ionizing radiation during normal operations.

Another SWPF strategy for actively controlling direct exposure events is to control confinement loss events (e.g., aerosolization, spills, and sprays), thereby removing the potential for direct exposure. The SWPF control strategy for direct exposure is through maintaining the robust design and construction of the process vessels, pumps, valves, and piping to prevent failure. In addition, reducing the PIEs – both human error and equipment failure – that could result in direct exposure are important aspects. Fires, explosions, and NPHs are PIEs. Preventing fires and explosions is an aspect of the control strategy for direct exposure. Constructing the CPA structure and process vessels to PC-3 standards as well as constructing the AFF/CCA structure

and process vessels to PC-1 standards is an important design feature to prevent initiating events from compromising the process equipment.

Specific controls for direct exposures primarily reflect ACs. The Radiological Program SMP ensures facility Workers operate with ALARA principles. The practice of draining systems prior to entering areas and/or opening systems ensures direct exposures are reduced. Maintenance procedures ensure that Workers are trained on and knowledgeable of the hazards for the work to be performed, again incorporating ALARA principles.

Direct exposure from process equipment releases is typically contained in nearby sumps that drain to a common vessel thereby reducing the radiological material. In addition, the layered ventilation systems for vessels and operational areas help to provide control for direct exposure by removing the radiological airborne material. In the ASP and CSSX, the PBVS ventilates the tank cells and operational areas. In the AFF, the AFF Ventilation System ventilates the AFF process area. There are also Vessel Ventilation Systems in the ASP, CSSX, and AFF. In the ASP and CSSX, the PVVS actively ventilates the head space of the vessels where aerosolization, spills, and sprays may happen. In the AFF, the AFF Vessel Ventilation System passively ventilates the head space of the vessels where aerosolization, spills, and sprays may happen.

To reduce the consequences to the Collocated Worker and Public, each of the ventilation systems are HEPA-filtered to mitigate the release of radiological materials in a direct exposure as a result of other events. The DCS; both the BPCS and SIS, provide important controls for direct exposure.

**Nuclear Criticality (Event Category E-5)**

For all normal and credible abnormal conditions, N-NCS-J-00005, *SWPF Nuclear Criticality Safety Evaluation: Fissile Concentration Due to MST*[23] demonstrated the material in the SWPF process will remain subcritical due to the MST concentration of fissile material. None of the hypothetical accident conditions result in a criticality based on the listed credited assumptions and controls including the SWPF Waste Acceptance Criteria (WAC). The system remains subcritical with nominal and upset conditions that exceed nominal values including low/high MST concentrations, high Uranium concentration, high Pu concentration, and multiple MST batches for vessels; the system remains subcritical with nominal and upset conditions that exceed nominal values including Uranium-235 enrichment for the Cross-flow Filter (CFF) system (N-NCS-J-00005[23]), noting that the system does not preferentially enrich Uranium-235. Together with the CSSX solvent properties, the SWPF WAC provides the bounding control for the postulated accident conditions. The MST CSE also concluded a criticality accident alarm system coverage was not warranted.

N-NCS-J-00006, *SWPF Nuclear Criticality Safety Evaluation: Accumulation of NAS in SWPF Equipment*[24] demonstrated for all normal and credible abnormal conditions will remain subcritical due to the accumulation of fissile material co-precipitated with Sodium Aluminum Silicate (NAS). Assuming breakthrough of a CFF, the system remains subcritical even with double the Uranium-235 enrichment and maximum buildup of MST/fissile material inside a

contactor (N-NCS-J-00005[23]). With the accumulation of fissile material co-precipitated with NAS, the given accident events are non-credible due to the physical inability to achieve a critical configuration with the maximum enrichment for salt solutions of 66 weight percent (wt%) Uranium-235 (N-NCS-J-00006[24]), noting the nominal value based on the WAC. Together with the solvent properties, the SWPF WAC provides the bounding control for the postulated accident conditions. The NAS CSE also concluded a criticality accident alarm system was not warranted.

N-NCS-J-00008, *SWPF Nuclear Criticality Safety Evaluation: Inadvertent Transfers*[25] demonstrated that all inadvertent transfers within the process stream will remain subcritical for normal and credible abnormal conditions. None of the hypothetical accident conditions result in a criticality given the listed restricted process assumptions, design features, and limits/controls. The events considered for criticality exceeded the limitations of the physical facility design and thus the analysis was bounding for SWPF operations. The events are bounded by the analyzed CSSX solvent properties and reflects the configuration of four (4) CFF filled with Pu/Uranium containing MST solids with less than critical quantities of Pu/Uranium, Uranium-235, and Pu-239 as determined in N-NCS-J-00005[23]. The bounding hypothesized upset conditions are not credible due to the inability of the system to achieve a critical configuration as well as due to the number of independent failures required for fissile material to accumulate. Together with the CSSX solvent properties, the SWPF WAC provides the bounding control for the postulated accident conditions.

The CSE evaluated the three (3) main SWPF operations: ASP, CSSX, and AFF. In the ASP, criticality is a non-credible event due to the inability of the system to achieve a critical configuration. The system remains subcritical with nominal and upset conditions that exceed nominal values including low/high MST concentrations, high Uranium concentration, high Pu concentration, and multiple MST batches for vessels; the system remains subcritical with nominal and upset conditions that exceed nominal values including Uranium-235 enrichment for the CFF system (N-NCS-J-00005[23]), noting that the system does not preferentially enrich Uranium-235. In addition, inadvertent mixing of various process streams that could result in an accumulation of fissile material within the ASP process vessels cannot create a credible criticality event.

In the CSSX, criticality is a non-credible event due to the inability of the system to achieve a critical configuration. Assuming breakthrough of a CFF, the system remains subcritical even with double the Uranium-235 enrichment and maximum buildup of MST/fissile material inside a contactor (N-NCS-J-00005[23]). With the accumulation of fissile material co-precipitated with NAS, the given accident events are non-credible due to the physical inability to achieve a critical configuration with the maximum enrichment for salt solutions of 66 wt% Uranium-235 (N-NCS-J-00006[24]), noting the nominal value based on the WAC. In addition, inadvertent mixing of various process streams that could result in an accumulation of fissile material within the CSSX process cannot create a credible criticality event.

In the AFF, criticality is a non-credible event due to the inability of the system to achieve a critical configuration. No known process by which the material in the AFF would have fissile (or MST) content that exceeds values analyzed for the ASP for vessels and CFFs; regardless of tank

sizes or geometries, the material compositions derived from the upset conditions will remain subcritical (N-NCS-J-00005[23]). In addition, inadvertent mixing of various process streams that could result in an accumulation of fissile material within the AFF process vessels, cannot create a credible criticality event.

In each of the areas, the CSSX solvent properties (e.g., maximum wt% Uranium-235 affinity) together with the SWPF WAC limiting the concentration of Uranium/Pu entering the SWPF processes are bounding, and therefore a credited IC to ensure a criticality event is not credible. While fissile material hazards do not screen out from the HI SIH screen, events with fissile material resulting in criticality are not carried forward for analysis in the SWPF HE tables in Appendix D of the SWPF HA (V-PHR-J-00007[2]) because the CSEs have determined criticality events are not credible and therefore there are no consequences associated with criticality of fissile material hazards.

The primary SWPF control strategy for criticality events is the quantity and concentrations of materials allowed by the SWPF WAC.

**External Events (Event Category E-6)**

Events external to the process building are considered for potential impact to the SWPF operations and considered for potential release mechanisms. External events have consequences typically due to inhalation of released hazardous material, and depending on the specific event, direct exposure may also be applicable.

The HE Nodes specifically addressed potential impacts from nearby SWPF hazards and nearby SRS facility hazards. Generally, external events do not have the potential to initiate a release of SWPF process hazards. However, chemical and radiological hazards released from nearby SRS facilities such as DWPF and SPF may result in a shelter in place emergency action for SWPF operations – with no immediate impact to SWPF operations.

There is a calculated potential for an aircraft crash into the SWPF. Due to the nearby airport distance from J-Area as well as the direction of the runways in relation to J Area, there is no substantial contribution from near airport activities to the overall aircraft crash frequency at SWPF. Large (e.g., commercial and military) aircraft impacts are not considered a credible event based on the calculated impact frequency. Small aircraft (e.g., helicopters and general aviation) impacts are considered with a relative frequency of Beyond Extremely Unlikely (BEU). Unmitigated consequences are evaluated for public only. A small aircraft can potentially impact the periphery of the CPA or any location in the AFF with associated piping damage with a pressurized spray. After an aircraft crash, the fuel from the aircraft will initiate a fire. The radiological consequences to the public from these releases are reflective of other fire events.

An aircraft can potentially impact the CCA with relatively no impacts to the public. An aircraft can potentially impact the external facility systems resulting in loss of those systems but with no release of hazardous process materials.

**Natural Phenomena (Event Category E-7)**

NPH events have consequences typically due to inhalation of released hazardous material and depending on the specific event, direct exposure may also be applicable.

An NPH event may cause significant damage to SWPF structures, process equipment, and facility systems. An NPH event may result in a release of hazardous material. An NPH event may initiate fire events, explosion events, loss of confinement events, and direct exposure events as considered above. However, an NPH event has the potential to result in one or more of these events occurring simultaneously, resulting in a potentially more significant release of hazardous material.

As with previous events (i.e., fires, explosions, loss of confinement, and direct exposure), the consequences of an NPH event reflect the release of the MAR from the process stream. Generally, the non-radiological constituents do not have a consequence of concern to the receptors whereas the radiological constituents have consequences of concern for the Worker, Collocated Worker, and Public.

Consequences associated with an NPH event typically follow the radiological MAR – with higher values in the ASP areas and as the Actinides are reduced, decreasing values in CSSX areas. As Cs-137 is reduced in the CSSX areas, the MAR is significantly lower in the AFF for a single strike. If a second (multi-) strike is necessary, the MAR will increase as the process stream is filtered and concentrated. Generally, an NPH event for the SWPF reflects spills, sprays, and aerosolized releases associated with the process vessels, pumps, valves, and piping in each of the ASP, CSSX, and AFF areas as well as the P&VG Labyrinths. Events associated with the CCA, Analytical Laboratory, and supporting areas are also considered. With a reduced MAR, events within the laboratory and other supporting areas have even less consequences especially to the Collocated Worker and Public.

An NPH event also has the potential to impact facility systems – which may include systems credited for prevention and/or mitigation of hazardous material releases with consequences to the Worker, Collocated Worker, and Public. Proposed event events include the failure of each credited system with respect to each operational Node. If a facility system was credited as a Preventive or Mitigative control, the facility system was evaluated for impacts from an NPH event as part of the given Node.

For each operational Node, NPH events considered impacts from seismic, tornado, high wind, wildfire, and flooding events, as well as lightning events. Other NPH events (e.g., precipitation, snow, cold/heat, etc.) were considered during the HE Meetings and determined not to be significantly important to SWPF operations based on the as-constructed building location and features. Flood events were subsequently determined not to have an impact except at the CCA loading dock – with no release of hazardous materials. Lightning events are considered an initiator for fires and explosions, as well as considered as a potential cause for damaging facility systems associated with each area. In the CPA, tornado and high winds were determined not to have an impact because the building structure and exterior are built to PC-3 standards that

prevents significant structural impact. In the AFF, CCA, and other SWPF areas, tornado and high winds were evaluated for potential impacts. Regardless of PC construction, all of the SWPF Nodes with potential hazardous material releases were evaluated for seismic events. Wildfire events are not expected to cause a release of hazardous material, but may have an impact from smoke on the ventilation systems.

NPH events are qualitatively assigned a frequency of Unlikely (U). For each operational Node, the applicable NPH events are first determined and then, the impacts of the general NPH event are evaluated. Credited controls are evaluated for the general NPH event and specifically credited for each operational Node.

Constructing the CPA structure and process vessels to PC-3 standards as well as constructing the AFF/CCA structure and process vessels to PC-1 standards is an important design feature to prevent NPH initiating events from compromising the process equipment. Additional control strategies reflect those previously discussed for fires, explosions, loss of confinement, and direct exposures. The layered vessel agitation, vessel ventilation, and process area ventilation work in concert to recover from an NPH event.

To reduce the consequences to the Collocated Worker and Public, each of the ventilation systems are HEPA-filtered to mitigate the release of radiological materials in an NPH event reflective of the other release events. The DCS; both the BPCS and SIS, provide important controls for recovery from NPH events. Ultimately, the Manual Disconnect Switches on the main SWPF power supply can provide a shutdown of all process equipment – but leaving the Back-up Air Receivers ADS to purge the vessels while recovery efforts are planned and executed. Portable Air Compressors can extend the available recovery time by preventing the buildup of $H_2$ from radiolysis in the vessels.

Certain hazards created by SWPF operation and the associated postulated events are sufficiently unique and complex to require more detailed descriptions than those presented in the narrative above. Additionally, certain fire, explosion, aerosolization, and seismic events are discussed in Subchapter 3.4 because of the potentially significant consequences that may result.

#### 3.3.2.3.1 Planned Design and Operational Safety Improvements

The SWPF is a new facility. At this this time, there are no design or operational safety improvements that have not already been implemented have been identified. The SWPF has committed to evaluating positive Unreviewed Safety Question Determinations and Potential Inadequacy in the Safety Analysis (PISA) from other liquid waste facilities at SRS to ensure applicable adequate evaluation of areas for design and operational improvements.

#### 3.3.2.3.2 Defense–in-Depth (General Control Strategy)

This Section summarizes the SWPF general control strategy (credited ECs and ACs), significant aspects of DID, and identifies associated safety significant (SS) SSCs, Specific Administrative Controls (SACs) and other items needing Technical Safety Requirement (TSR) coverage. Both

the facility design and administrative features are included with respect to DID and DID/ITS controls.

As presented in the SWPF HE Tables in Appendix D of SWPF HA (V-PHR-J-00007[2]), Preventive and Mitigative controls are selected using a judgment-based process considering a standard controls hierarchy.

#### 3.3.2.3.2.1 Initial Conditions

ICs are used as a starting point of analysis within the HE, and influence the frequency and/or consequences of an unmitigated event. The ICs were identified throughout the HE process as necessary to reflect the physical design and/or process design aspects in context of specific events.

Each IC was considered when assigning unmitigated frequencies and consequences for corresponding hazard events. Assignments of consequence, frequency, and risk for each event can be found in the SWPF HE Tables in Appendix D of the SWPF HA (V-PHR-J-00007[2]). Generally, the ICs are not assigned by event in the SWPF HE Tables and therefore, the ICs carry forward as controls into the SB. Table 3.7-13 lists ICs and general descriptions/safety functions derived for the SWPF HA (V-PHR-J-00007[2]).

ICs were derived to support the context of the SWPF HA (V-PHR-J-00007[2]) and the derivation of controls. Access Control provides context that the worker is not present in the "dark cells." Personnel entry into the ASP Process Vessel Cells ("dark cells"), East CSSX Tank Cell, Strip Effluent Hold Tank (SEHT) Cell, and WTE is prohibited. For this reason, direct radiation exposure is not addressed. The Facility Structure ICs (e.g., AFF dikes, CPA Structure) are credited for preventing releases as a result of physical impacts and/or NPH events – therefore, supporting the IC derivation. The Area Shielding provides context that workers are not exposed to the ionizing radiation from the "dark cells." The CFFs define the quantity of radiological material captured in the ASP process and support that the criticality events are non-credible.

The Lightning Protection System protects the facility vessels and piping from a lightning strike. The Design of the SWPF and the subsequent analysis depends up on the incoming process stream meeting the SWPF WAC to define the release consequences. Together with the Process Chemistry, the SWPF WAC help to define the quantities of radiological and non-radiological materials throughout the facility. The Process Vessel Design (PC-1) provides protection of the CSSX Contactors, CSSX Vessels, and AFF Vessels from physical impact.

#### 3.3.2.3.2.2 Summary Controls

Generally, chemical exposures do not exacerbate the consequences of a nuclear-related event (e.g., inhibit credited Operator actions to terminate an event, inhibit emergency response that is credited with reducing the consequences of a nuclear-related event) and no SS controls were identified in association with bulk chemical handling/processing. The SWPF HA (V-PHR-J-00007[2]) derived controls for the evaluated event types listed in Table 3.7-14. The SS SSCs and

primary ACs identified as SACs requiring TSR coverage are described in greater detail in Chapters 4.0 and 5.0 of this DSA.

The following Subsections describe the credited ECs and ACs identified in the SWPF HA (V-PHR-J-00007[2]) that protect the Workers, Collocated Workers, and Public from operations at the SWPF. No SC level controls were derived from this analysis. This Section also addresses DID and DID/ITS controls derived throughout the SWPF HA process.

#### 3.3.2.3.2.2.1 Engineering Controls

Each of the EC derived from the SWPF HA (V-PHR-J-00007[2]) were considered for SS SSC designation. These SS SSCs refer to the structure, containment vessels, and equipment in use at SWPF to prevent Worker fatality, serious injury, and exposure to chemicals and/or other hazardous materials. Table 3.7-15 provides a description of the ECs identified in the SWPF HA (V-PHR-J-00007[2]), which are carried forward in this DSA as SS SSCs. The table identifies the credited controls selected in the HE for a reduction in risk and are a portion of the control-set that makes up the SWPF SB. Each credited EC is considered a SS SSC.

#### 3.3.2.3.2.2.2 Administrative Controls

ACs are dependent upon human actions, and are identified in the SWPF HA (V-PHR-J-00007[2]). The ACs provide requirements through management plans, policies, corporate and facility SMPs, SOPs, and TWDs. Table 3.7-16 provides a description of the ACs identified in the SWPF HA (V-PHR-J-00007[2]). The table identifies the credited controls selected in the SWPF HE for a reduction in risk and are a portion of the control-set that makes up the SWPF SB. The credited ACs are carried into this DSA with further evaluation necessary to determine which will be SACs.

Primary ACs are specifically derived when only ACs are identified in events for a reduction in risk – either frequency or consequence. Primary ACs are not derived in events with ECs resulting in a reduction in risk. Access Control, SOP/Training – CO, Solvent Removal Program, Tank Agitation Program, and Manual Disconnect Switch are identified as the Primary ACs for SWPF.

Where multiple ACs are credited, Access Control is selected when the Activity is Operations. Access Control restricts personnel access into operational areas. Where multiple ACs are credited, SOP/Training – CO is selected when the Activity is Maintenance. The SOP/Training – CO requires the draining and flushing of vessels, piping, valves, and pumps prior to maintenance. The Solvent Removal Program prevents appreciable buildup of residual solvent in the AFF. The Tank Agitation Program prevents the settling and accumulation of solids in process vessels. The Manual Disconnect Switch provides a means of removing all electrical power to the facility thereby shutting down process and recirculation pumps as well as tank agitators. Primary ACs from the SWPF HA (V-PHR-J-00007[2]) are elevated to SACs. Both ACs and SACs are further discussed in Chapters 4.0 and 5.0 of this DSA for those events carried into AA.

#### 3.3.2.3.2.2.3 Defense-In-Depth Controls

To compensate for potential facility failures, DID is based on several layers of protection with successive barriers to prevent the release of hazardous materials to the environment. This approach includes measures to protect the public, workers, and the environment from harm in case any of these barriers are not fully effective. Defining DID at a given facility is important in determining the SB, however, no requirement to demonstrate a particular number of layers of defense for any particular postulated accident or event is imposed.

DID controls are comprised of ECs and ACs identified through the SWPF HA process as other supporting controls. The DID controls provide additional layers of protection and requirements through management plans, policies, corporate and facility SMPs, SOPs, and TWDs. DID controls are identified as other controls in the SWPF HA (V-PHR-J-00007[2]). DID controls are not assigned a preventive/mitigative function or margin of safety.

#### 3.3.2.3.2.2.4 Defense-In-Depth/Important-To-Safety Controls

The DID/ITS SSCs are selected from the list of non-credited controls identified in the SWPF HA (V-PHR-J-00007[2]). As DID/ITS SSCs, the facility commits to ensuring that each of the SSCs is installed and, once installed, will not be removed without approval of DOE. Note because DID/ITS SSCs are not included in the TSRs, SWPF operations may continue with these SSCs temporarily out of service as permitted and managed by existing site procedures, facility procedures, and SMPs.

DID/ITS controls are comprised of ECs and ACs. The DID/ITS controls provide additional layers of protection and requirements through management plans, policies, corporate and facility SMPs, SOPs, and TWDs. Table 3.7-17 provides a description of DID/ITS controls identified as other controls in the SWPF HE Tables in Appendix D of the SWPF HA (V-PHR-J-00007[2]). DID/ITS controls are not assigned a preventive/mitigative function or margin of safety, but are considered a part of the SWPF SB.

Following completion of the SWPF HA, all DID and DID/ITS controls were reviewed for major contribution to DID. DID and DID/ITS controls deemed as major contributors to DID, were elevated to SS SSC status. This review identified three DID/ITS controls related to various confinement ventilation systems identified as major contributors to DID. These three controls are identified by note in Table 3.7-17, and in Chapter 4.0 of this DSA. Other DID/ITS controls were determined to be needed as SS controls by the accident analysis in Subchapter 3.4. The elevation of these other controls is also identified by note in Table 3.7-17.

#### 3.3.2.3.3 Worker Safety

This Subsection summarizes the major features protecting workers from the hazards of facility operation, exclusive of SIHs.

The SWPF HA (V-PHR-J-00007[2]) provides an evaluation of the SWPF approach to facility worker safety with focus on protection from radiological and non-radiological hazards.

Generally, all of the HE events evaluated worker safety and identified corresponding controls. This Subsection identifies worker safety features as an integral part of facility design and operation, the adequacy of basic facility operations for worker safety, and that workers are protected by a number of means including SMPs.

Elimination, substitution, and many ECs protecting worker safety are engineered into the facility. Worker exclusion from the "dark cells" provides primary worker protection in the ASP. Access Control along with SOP/Training provide worker protection in the CSSX and AFF areas. Access Control acts as the primary control for removing the worker from areas ensuring exposures to radiological and non-radiological constituents of the process stream are prevented. For maintenance, the SOP/Training requiring the draining and flushing of process piping/vessels is a primary worker safety control. Flushing the systems prior to opening valves and cutting pipes ensures radiological and non-radiological constituents of the process stream are removed. For normal operations, the PBVS provides a primary control for worker safety in the CSSX and AFF through removal of airborne radiological materials in the process areas. For normal operations, the facility shielding plus the Radiation Protection Program ensure worker exposures to ionizing radiation are minimized following ALARA principles.

The SWPF HA (V-PHR-J-00007[2]) provides a description of the SMPs providing worker safety protection. These SMPs include Criticality Safety Program, Radiation Protection Program, Hazardous Materials Protection Program, Occupational Safety Program, and Emergency Preparedness Program. These selected SMPs provide interfaces with the worker health and safety program as required by 10 CFR 851[21].

#### 3.3.2.3.4 Environmental Protection

This Subsection summarizes the design and operational features that reduce the potential for large material releases to the environment. Document pathways for uncontrolled release of large amounts of hazardous materials to the environment identified in the SWPF HE. This Subsection concludes that no large release with the potential to cause significant environmental insult exists.

DOE/EIS-0082-S2, *Savannah River Site Salt Processing Alternatives Final Supplemental Environmental Impact Statement*[26], issued in June 2001, describes the *National Environmental Policy Act (NEPA) of 1969*[27] process that DOE used in selecting the salt processing alternatives. DOE/EIS-0082-S2[26] and associated *Record of Decision: Savannah River Site Salt Processing Alternatives*[28] concluded that a SWPF that utilized MST to remove and concentrate actinides and the CSSX process to remove and concentrate radioactive Cs-137 could be built and operated without significant environmental impact. Further information concerning SWPF environmental protection activities is presented in S-EIP-J-00001, *SWPF Environmental Plan*[29].

Environmental monitoring for SWPF is conducted in accordance with V-ESR-J-00019, *SWPF Permitting and Monitoring Requirement Interface Control Document (ICD-19)*[30].

The process of developing layers of defense and identifying SS SSCs not only provides protection for Worker, Collocated Worker and Public, but also provides levels of protection for

the environment. The SWPF to handle liquid radioactive waste and process chemicals in a manner that: 1) prevents release of any potentially harmful quantity of radionuclides or chemicals to the environment, and 2) minimizes exposure to the Worker, Collocated Worker, and Public to radiation from these wastes. This applies to both normal and abnormal operation and accidents.

Normal operation of the SWPF includes efforts to reduce personnel and environmental exposure to airborne and surface liquid releases. The estimated annual maximum offsite dose due to normal operation of the SWPF was determined in Calculation Q-CLC-J-00052, *SWPF Radiological Air Emissions, Dispersion, and Dose Assessment for Normal Operations of Ventilated Tanks and Vessels*[31]. The results of the calculation show the maximum offsite dose to be less than 0.1 millirem per year. This is well within the requirements of 40 CFR 61, *National Emission Standards for Hazardous Air Pollutants*[32]. Similarly, all chemical emissions are below Occupational Safety and Health Administration (OSHA) Permissible Exposure Limits (PELs) at the point of emission and should be orders of magnitude below the PELs at ground level (see Q-CLC-J-00006, *Level II Analysis of SWPF Air Toxic Emissions and Evaluation of Chemical Emissions Exposure Levels Adjacent to SWPF*[33]).

The SWPF makes no process-related releases directly to surface waters. Overall, the impact on the environment is small from normal operation releases. The design and operation features that protect the Worker, Collocated Worker, and Public also protect the Environment. Each design and operation feature contributes to DID, thereby contributing to environmental protection. The objective is to prevent releases that cause unacceptable harm to the Worker, Collocated Worker, Public, and the Environment.

Abnormal operations of the SWPF center on preventing and minimizing the consequences of leaks or spills of radioactive material or chemicals (i.e., loss of confinement). Key to protecting the Public and the Environment from releases is prevention of leaks and timely detection of leaks so mitigation can begin.

SWPF and SRS environmental and emergency response procedures address prevention and control of radioactive liquid releases, including radioactive sampling and stormwater runoff control and monitoring. Evaluation of the environmental consequences of a hazardous material release is qualitative in nature.

Environmental monitoring is used to assess pollutants released from SWPF operations and demonstrate that SWPF operations are not adversely affecting the environment or offsite populations. This information is documented in an annual SRS environmental report.

#### 3.3.2.3.5 Accident Selection

This Subsection presents the events selected for accident analyses. Based on the results of the SWPF HA (V-PHR-J-00007[2]), AAs are necessary to understand the event progression of a loss event and the subsequent impacts. AA entails the formal quantification of a limited subset of accidents (i.e., DBAs). These accidents represent a complete set of bounding conditions. The

identification of DBAs results from the HE ranking of the complete spectrum of SWPF accidents.

The accident selection activity identifies the process and criteria used to select the unique and representative potential DBAs. At least one bounding accident from each of the major types determined from the SWPF HA (V-PHR-J-00007[2]) are selected. Accidents are identified and listed by accident event type.

The SWPF HA (V-PHR-J-00007[2]) did not identify any radiological material release events with consequences challenging the 25-rem EG for the Maximally Exposed Offsite Individual (MOI). Because no postulated accidents challenge the offsite EGs, no DBAs are identified for analysis in Subchapter 3.4 of this DSA on the basis of offsite consequences. Additionally, the SWPF HA (V-PHR-J-00007[2]) did not identify any non-radiological hazardous material release events that cause or exacerbate a release of radioactive material or challenge the offsite chemical EG. Therefore, no DBAs are identified for analysis in Subchapter 3.4 of this DSA for non-radiological materials.

The SWPF HA (V-PHR-J-00007[2]) identifies multiple events with potential High consequences to the Collocated Worker (Onsite-2) receptor. The SWPF HA (V-PHR-J-00007[2]) identified multiple events with High consequences to the Onsite-2 receptor passed forward for consideration as DBAs for the AA. The multiple events with High consequences to the Onsite-2 receptor are grouped according to similarity of the accident stressor (i.e., fires, explosions, etc.), location, and the potential MAR. A bounding DBA is defined for each group of similar HA events. The results of the accident selection process is provided in Table 3.7-20 and summarized in Table 3.7-21. There are events listed in Table 3.7-20 qualitatively identified with “High” consequence to the collocated worker in the SWPF HA (V-PHR-J-00007[2]); however, further quantitative calculations determined that these events did not result in “High” consequence to the collocated worker.

The accident analyses selection process resulted in five representative DBAs for SWPF. The five DBAs are Process Vessel Cell Fire, ASP Process Vessel Explosion, ASP APA Air Jet Aerosolization, AFF Process Vessel Explosion, and SWPF Seismic Event. These five events provide significant insight into the potential risks to the Collocated Worker. These grouped events were identified as representative DBAs for the SWPF are discussed in Subchapter 3.4.

Note: The process vessel explosions are assumed to take the form of a detonation for the purpose of determining radiological consequences resulting in a conservative estimate of the consequences because a detonation generates a larger amount of aerosolized material than a deflagration.

Table 3.7-18 list the controls derived from the AA for the event types evaluated in Subchapter 3.4. The SS SSCs and SACs requiring TSR coverage are described in greater detail in Chapter 4.0 and Chapter 5.0 of this DSA.

Note, the SWPF HA (V-PHR-J-00007[2]) identified receptors as Worker, Collocated Worker, and Public; whereas the DSA AA identified receptors as Onsite-1, Onsite-2, and Offsite or MOI, respectively. Table 3.7-4 provides the alignment of receptors.

## 3.4 Accident Analysis

Subchapter 3.1 discusses the process by which potential accidents are identified for further quantitative analysis, and concludes that, because there were no events identified in the HA that challenge the Offsite receptor EG of 25 rem, analysis of appropriate DBAs that challenge the TOC of 100 rem for the Onsite-2 receptor meets the intent of analyzing unique and representative facility accidents. These accidents, including their unmitigated and mitigated consequences and controls selected, are analyzed in Subchapter 3.4.

The five accidents identified as unique and representative accidents for the SWPF are discussed in this subchapter. The five DBAs are Process Vessel Cell Fire, ASP Process Vessel Explosion, AFF Process Vessel Explosion, ASP APA Air Jet Aerosolization, and Seismic Event. These five events were formally analyzed by using the appropriate AA techniques to determine the unmitigated consequences to both the Offsite and Onsite-2 receptors. Mitigated consequences were also determined, where appropriate. The details and results of the AA of these five events are discussed in this subchapter.

### 3.4.1 Methodology

This section summarizes the methods used to quantify the consequences of the DBAs identified as requiring analysis in Subsection 3.1. Analysis of a DBA or BDBA involves the calculation of the consequences of the accident. This section describes the methods used to develop the source term (ST) and determine the consequences of operational events and NPH events identified as DBAs in Subsection 3.1.

#### 3.4.1.1 Source Term Analysis

Significant consequences from a release at SWPF are possible for both airborne and liquid releases. However, the HA did not identify any significant liquid release events that could result in potential consequences to the offsite receptor that challenge the EGs. Therefore, only airborne releases are of concern to the AA for SWPF. Additionally, the HA did not identify any hazardous chemical release events that might result in significant impact to the offsite receptor. As a result, the remainder of this subchapter only addresses radiological airborne releases from accidents.

The source term is calculated using the five-factor formula from DOE-HDBK-3010-94, Change Notice 1[5]. The airborne ST for an event can be estimated by the following equation:

$$ST = MAR * DR * ARF * RF * LPF \qquad \text{(Eq. 1)}$$

Where:

ST = Source Term. Amount of respirable hazardous material released to the environment by the accident (depending on the event, this can be in units of gallons or Ci).

MAR = Material at Risk. The amount of radioactive material available to be acted upon by the accident stress (depending on the event, this can be in units of gallons or Ci).

DR = Damage Ratio. The fraction of the MAR actually impacted by the accident stress.

ARF = Airborne Release Fraction. The fraction of the MAR that is suspended in air as an aerosol and is available for airborne transport to the receptors due to the physical stresses from the accident.

RF = Respirable Fraction. The fraction of the airborne radioactive material as particles that can be transported through the air and inhaled into the human respiratory system. The RF only includes particles 10 μm Aerodynamic Equivalent Diameter or less per DOE-HDBK-3010-94, Change Notice 1[5].

LPF = Leak Path Factor. The fraction of radionuclides transported through any confinement, deposition, or filtration mechanism and released to the atmosphere.

The version of the five-factor formula shown above is used for accident stressors that act on the MAR directly independent of time. For accident stressors that act on the MAR over a definite period of time, the above formula is modified to:

$$ST = MAR * DR * ARR * t * RF * LPF \qquad \text{(Eq. 2)}$$

Where:

ARR = Airborne Release Rate. The coefficient used to estimate the amount of radioactive material that can be suspended in air by continuously acting accident mechanisms such as aerodynamic entrainment or resuspension.

t = Duration of the Accident. The total time that the accident stress acts on the MAR.

The development of the values for the terms in the source term formulas used in the SWPF AA are discussed in more detail in the following sections.

#### 3.4.1.1.1 Material at Risk

The MAR is the amount of inventory available to be acted upon by the event, and is taken from Appendix 5 of S-CLC-J-00029[22]. For the AA for SWPF, the MAR for all of the events is in the form of liquid. The MAR is, therefore, defined in terms of the radioactive material content in units of curies per gallon (Ci/gal) and in terms of the total volume of the MAR in terms of gallons. The MAR definitions provided in S-CLC-J-00029[22] are developed to ensure bounding estimates of the radioactive material content and volume of the MAR for the AA.

The SWPF processes and accumulates materials that pose radiological and/or chemical hazards. The radioactive material is liquid waste received from the F-Area Tank Farm and H-Area Tank Farm (HTF) Liquid Waste tanks and concentrated by the ASP, CSSX process, and Alpha Finishing Process. The concentrated Sr-90, actinide, and Cs-137 wastes and the decontaminated salt solution (DSS) from these processes are stored in the SWPF until they can be transferred to

the DWPF and SPF for final treatment. The chemicals of concern are the extraction solvent, caustic, and acid solutions used in the SWPF process operations.

The radioactive material is held in vessels in the shielded Process Vessel Cells and CSSX Cells in the Process Building, or the diked areas of the AFF. The Process Mass Balance (PMB) Model (see P-ESR-J-00001, *Mass Balance Model Summary Description*[34]and M-CLC-J-00143, *Mass Balance Model Calculations as a Result of Nitric Acid Replacing Oxalic Acid*[35]) models the flows and constituents, both radionuclide and chemical concentrations, for the SWPF process design. To ensure reasonably bounding radionuclide concentrations for the SWPF process streams, S-CLC-J-00029[22], was developed based on the PMB Model, with additional assumptions ensuring that inventories used for the safety analysis envelope the actual process.

For the AA, identification of potential process vessel and tank inventories requires consideration of operational upset events. For these events, the radionuclide inventories determined in the PMB Model may not be bounding. To ensure that the radionuclide concentrations for the AA are bounding, the process vessel inventories were developed by considering these events in S-CLC-J-00029[22]. The radionuclide inventories determined in S-CLC-J-00029[22] were used to define the MAR for the AA.

S-CLC-J-00029[22] was developed by using the PMB Model, with additional assumptions ensuring that inventories used for the safety analysis envelop the actual process, including operational upset events. The following paragraphs provide a discussion of the major assumptions.

The liquid radionuclide concentrations used for Tank Farm feed were taken from the available data for supernate (see WSRC-TR-2004-00386, *Characterization of Supernate Samples from High Level Waste Tanks 13H, 30H, 37H, 39H, 45F, 46F and 49H*[36]). For this analysis, the input radionuclide concentrations for all but Cs-137 were the average of the values from the two highest concentration tanks for each radionuclide, multiplied by a safety factor of 1.2. The Cs-137 concentration was capped at the proposed SWPF WAC limit of 5.25 Curies per gallon (Ci/gal) (see P-SPC-J-00001, *SWPF Feed Strategy and Product and Secondary Waste Specification*[37]). The solids radionuclide concentrations in the "sludge" were taken from the Letter of Direction (see PE-03-166, "*Monosodium Titanate [MST] Performance in Removing Actinides/Strontium from Feed at the Salt Waste Processing Facility [SWPF]*" and attachment, "*Suggested Design Basis for SWPF Feed – Conceptual Design Phase*"[38]), multiplied by a safety factor of 1.2.

To calculate the maximum possible radionuclide concentrations for the SWPF flow streams, two separate runs were performed in S-CLC-J-00029[22]. Single-strike operation maximizes the ASP process vessel inventories. The two-strike operation maximizes inventories in the CSSX and AFF processes. The solids concentration in Filter Feed Tank-A (FFT-A) (TK-102) (single-strike) and Filter Feed Tank-B (FFT-B) (TK-222) (double-strike) were calculated for the reasonably bounding concentration instead of the nominal process solids concentration.

**Single-Strike Operation (**1,200 milligrams per liter solids)

The first model run was performed using the parameters for single-strike operation of the SWPF. To maximize the ASP radionuclide concentrations, the following assumptions were used:

- Sludge content in the Tank Farm feed was assumed to be 1,200 milligrams per liter (mg/L) versus 600 mg/L for PMB, doubling the solids content to 0.09 wt%;
- Decontamination Factor (DF) values for MST of 100 for each species versus a range of 1.0 to 20 for PMB;
- MST concentration of 0.3 grams per liter (g/L) versus 0.4 g/L for PMB; and
- Sludge in FFT-A (TK-102) was concentrated to a reasonably bounding value of 18 wt% versus a target value of 5 wt% for PMB.

**Two-Strike Operation**

The second model run was performed using the parameters for two-strike operation of the SWPF. To maximize the CSSX and AFF process radionuclide concentrations, the following assumptions were used:

- Sludge content in the Tank Farm feed was assumed to be 1,200 mg/L versus 600 mg/L for PMB, doubling the solids content to 0.09 wt%;
- MST concentration of 0.3 g/L versus 0.4 g/L for PMB used in Alpha Sorption Tank-A (AST-A) (TK-101) and Alpha Sorption Tank-B (AST-B) (TK-221);
- Six (6)-hour, multi-strike DF values for AST-A (TK-101) from the PMB;
- MST/sludge was concentrated to the reasonably bounding value of 10.00 wt% versus 5 wt% for PMB in FFT-B (TK-222);
- DF values for MST of 100 for each species versus range of 1.0 to 17 for PMB in AST-B (TK-221); and
- Strip Effluent Cs-137 concentration is increased by 20 percent (%) by changing the Strip Contactor organic to aqueous ratio based on flow rates ratio to 6 versus 5 for PMB.

In addition, a “Missed MST” strike in AST-A (TK-101) is calculated with the Double-strike model for use in AFF inventories.

S-CLC-J-00029[22] defines the Process Streams used and provides reasonably bounding radionuclide concentrations for the SWPF process streams. For the AA, identification of potential process vessel and tank inventories requires considerations of other events. These included:

1. Misdirected flows,
2. Equipment Failures,

3. Operator Errors, and
4. Process or Recovery Requirements.

For these events, the radionuclide inventories determined in S-CLC-J-00029[22] may not be bounding. To ensure that the radionuclide concentrations for the HA and for AA are bounding, considering potential process upsets, the process vessel inventories were also developed considering these events in S-CLC-J-00029[22].

Table 3.7-19 provides a summary of radionuclide inventories used in the evaluation of the SWPF.

The reasonably conservative maximum solids wt% for concentrated waste in the ASP process (FFT-A [TK-102] and Sludge Solids Receipt Tank [SSRT] [TK-104]) is 18 wt% for Tank Farm feed, with 1,200 mg/L entrained solids (0.09 wt% solids) and 7 wt% for Tank Farm feed with the no solids. The reasonably conservative maximum wt% for concentrated waste in the AFF (FFT-B [TK-222] and MST/Sludge Transfer Tank [MSTT] [TK-224]) is 10.01 wt% for a missed MST strike in an AST-A (TK-101) batch combined with 6 regular batches. These solids wt% values are established based on the CFF loop volumes, the seven concentrated batch volumes, and the remaining volume in FFT-A (TK-102) or FFT-B (TK-222) during the concentration process with the CFF loop filled. Ten (10) batches of reasonably conservative maximum solids were used for the inventories of FFT-A (TK-102), SSRT (TK-104), FFT-B (TK-222), and MSTT (TK-224) process vessels versus the 7 batches of 5 wt% solids inventory of the normal SWPF process.

The 18 wt% solids in FFT-A (TK-102) for the Tank Farm feed with 0.09 wt% entrained solids has a larger concentrated radionuclide inventory than the maximum concentrated waste (7 wt% solids) in FFT-A (TK-102) for Tank Farm liquid only (no entrained solids) feed. Therefore, the tank inventories provided for Tank Farm feed with 0.09 wt% entrained solids bound the tank inventories for Tank Farm liquid-only feed with no entrained solids. The inventories used in the AA were developed by using Tank Farm feed with 0.09 wt% entrained solids.

#### 3.4.1.1.2 Damage Ratio

The actual amount of material affected is represented by the product *MAR*DR* for each event, where DR is the fraction of the MAR actually impacted the accident stressor. For the majority of the AA at SWPF, the DR is assumed to be one, signifying that all of the material is potentially impacted by the accident stress. However, in one case this was not done. For SWPF, the only significant potential source of flammable material is the CSSX solvent used in the process. There is a limited volume of CSSX solvent in the process that may contribute to the occurrence or a fire that impacts the radioactive material in SWPF. Because the flammable material is limited, the volume of the radioactive material that is impacted is also limited, requiring a DR for the analysis of the fire events.

The overlying solvent fire could cause aerosolization by evaporation from the heavier, aqueous solution below the solvent layer. Waste aerosolization due to moisture evaporation is quantified on the basis of release from boiling liquids. The mass of liquid at risk is computed as the mass of

water which could be evaporated by heat transferred from the flame to the inflamed surface. Using a flame heat transfer rate of 57 kW/m$^2$, an average specific burning rate of 2.34 kg/m$^2$-min, and a heat of vaporization of water of 2.258 MJ/kg, the mass of water evaporated per mass of fuel is calculated as:

$$\frac{m_{aq}}{m_{fuel}} = \frac{q''}{\dot{m}_f h_{fg,aq}} \qquad \text{(Eq. 3)}$$

Where:

$m_{aq}$ = Mass of aqueous evaporated, kg

$m_{fuel}$ = Mass of fuel in fire, kg

q" = Flame heat flux, W/m$^2$

$h_{fg,aq}$ = Aqueous heat of vaporization, J/kg

$\dot{m}_f$ = Fuel specific burning rate, kg/m$^2$ sec

The DR for the solvent fire events is determined in Calculation S-CLC-J-00041, *SWPF Fire Radiological Consequence Analysis (U)*[39]. For all other accidents analyzed for SWPF, the DR is set to a value of one.

#### 3.4.1.1.3 Airborne Release Fraction, Airborne Release Rate, and Release Fraction

The ARF, ARR and RF values were obtained from DOE-HDBK-3010-94, Change Notice 1[5] or were developed mechanistically for accident stressors not addressed in the handbook and are based on the release mechanism and the material form. For particular release mechanism such as aerosolization, the ARFs or ARRs were calculated. The product of ARF * RF or ARR * t * RF represents the fraction of the material impacted that becomes airborne and is respirable. The ARF, ARR, and RF for each of the accident types identified to be applicable to SWPF are discussed in the following.

**<u>Fires</u>**

For the solvent fire events that were determined to represent significant risk to the offsite and onsite receptor for SWPF, the ARFs and RFs are taken directly from DOE-HDBK-3010-94, Change Notice 1[5]. The ARFs and RFs utilized for the analysis of fires are:

| | |
|---|---|
| Quiescent burning, small surface area pools, or small solvent layer over large aqueous layer burning to self-extinguishment. | |
| Bounding | ARF 1E-2/RF 1.0 |
| Vigorous burning large pools, or solvent layer burning over limited aqueous layer with sufficient turbulence to disrupt bulk of aqueous layer. | |
| Bounding | ARF 3E-2/RF 1.0 |
| Large, vigorously burning organic fire that burns to complete dryness or burning solvent over aqueous phase burning to complete dryness for both phases (typically requires external heat source). | |
| Bounding | ARF 1E-1/RF 1.0 |

**Explosions**

For SWPF, vapor explosions are only considered to be credible in process vessels if the process vessel vapor space reaches flammable conditions within 10 days of the start of the event. To determine which vessels reach flammable conditions within 10 days, the process vessel liquid, vapor, and total volumes used as the basis for determining the time to reach Composite Lower Flammability Limit (CLFL) are defined in S-CLC-J-00033, *Time to Reach the Composite Lower Flammability Limit (CLFL) for SWPF Process Vessels*[40]. The flammability of the mixture of gases that may be present in the SWPF vapor spaces is determined by the CLFL. The CLFL is determined by using Le Chatelier's rule (Bureau of Mines Bulletin 680: *Investigation of Fire and Explosion Accidents in the Chemical, Mining, and Fuel-Related Industries – A Manual*[41]):

$$CLFL = \frac{1}{\sum_j \frac{f_j}{LFL_j}} \qquad \text{(Eq. 4)}$$

Where:

CLFL = composite lower flammability limit in volume fraction,
$f_j$ = volume fraction (with respect to the total flammable gas volume) of the jth combustible gas,
$LFL_j$ = lower flammability limit of the jth combustible gas.

For the flammability analysis for SWPF, the fraction of CLFL is also used to determine whether a vapor space is flammable. The fraction of CLFL is determined by modifying Le Chatelier's rule to the form of S-CLC-J-00033[40]:

$$\text{Fraction of CLFL} = \sum_j \frac{vf_j}{LFL_j} \qquad \text{(Eq. 5)}$$

Where:

$vf_j$ = the volume fraction (with respect to the total vapor space volume) of the jth combustible.

The LFL of a flammable gas is dependent on the temperature of the gas. The LFL decreases with increasing temperature. For the SWPF flammability analysis, the LFLs of the flammable gases are corrected by using the Burgess-Wheeler Law (Bureau of Mines Bulletin 680[41]):

$$LFL_T = LFL_{25C} * (1 - A(T - 25)) \quad \text{(Eq. 6)}$$

Where:

$LFL_T$ = LFL at temperature T (in degrees Celsius [$^oC$]),
$LFL_{25C}$ = LFL at 25$^oC$,
A = empirical coefficient (Zabetakis attenuation factor),
T = temperature at which LFL is to be evaluated in $^oC$.

To determine the Zabetakis attenuation factor for the flammable gases, the relationship used is Bureau of Mines Bulletin 680[41]:

$$A = \frac{100 * \sum nC_p}{LFL_{25} * \Delta H_C} \quad \text{(Eq. 7)}$$

Where:

n = moles of product of combustion per mole of fuel, and
$C_p$ = specific heat of combustion product in kcal/degree mole.
$LFL_{25}$ = the LFL (in volume percent) at 25$^oC$, and
$\Delta H_C$ = the heat of combustion of the fuel vapors in question in kcal/gmole at 25$^oC$.

The LFL of $H_2$ used in the SWPF safety analysis is a volume fraction of 0.04 at 25$^oC$ (Bureau of Mines Bulletin 680[41]). The LFL of the CSSX solvent is assumed to be the same as that of the major constituent, Isopar®L, and is a volume fraction of 0.006 at 25$^oC$ (Material Safety Data Sheet (MSDS) 92842637: Isopar L Fluid[42]). The flashpoint of the CSSX solvent has been determined to be 148 degrees Fahrenheit ($^oF$) (ORNL/TM-2007/093, *Radiolysis of CSSX Solvents for Parsons Infrastructure & Technology Group in FY 2007 in support of the Salt Waste Processing Facility at the Savannah River Site.*[43]).

The release resulting from a detonation is determined using the "TNT Equivalent Method" from DOE-HDBK-3010-94, Change Notice 1[5]. That is, the source term mass is taken to be equal to the mass of Trinitrotoluene (TNT) that would give the same total energy release as that released by the flammable vapors combusted with the air in the vessel. This method sets the product of the MAR, DR, and ARF factors equal to the energy-equivalent mass of TNT.

Specifically, the mass of material aerosolized in the process vessels, and the associated source term for the fraction of that material released from the facility, are calculated using the following:

$$m_{TNT} = \frac{E_c}{E_{TNT}} \qquad \text{(Eq. 8)}$$

and

$$ST = m_{TNT} \times LPF \times RF = \frac{E_c}{E_{TNT}} \qquad \text{(Eq. 9)}$$

Where:

$m_{TNT}$ = TNT equivalent mass (grams)

$E_c$ = total gas phase combustion energy (kilocalories)

$E_{TNT}$ = TNT mass equivalent (1.1 kilocalories per gram)

LPF = Leak path factor (=1)

RF = Respirable fraction (=1)

Therefore, the term $m_{TNT}$ is equivalent to the MAR * ARF for the source term formula above.

**<u>Air Jet Aerosolization</u>**

The accident stressor that has the potential to generate respirable aerosols of radioactive material in this scenario is related to the interaction of a high-pressure air jet with a liquid. There are no applicable values for this accident stress in DOE-HDBK-3010-94, Change Notice 1[5]. Therefore, a specific model is developed to determine the ARR and RF for air jet impingement on the liquid waste. The specific model for the ARR for air jet aerosolization accidents is:

$$ARR = \frac{\rho_l * F * eff * v_j^2 * D_l}{12 * \sigma_l} * \overset{*}{m}_j \qquad \text{(Eq. 10)}$$

Where:

$\rho_l$ = density of the liquid impacted by the air jet in g/cm$^3$,

eff = entrainment efficiency (dimensionless),

F = fraction of the total kinetic energy of the air jet that goes into the generation of droplets (dimensionless),

$\overset{*}{m}_j$ = mass flow rate of the air jet in g/sec,

$v_j$ = velocity of the air jet in cm/s,

$D_l$ = diameter of droplets formed in cm, and

$\sigma_l$ = the surface tension of the liquid in dynes/cm.

The RF can be accounted for by the definition of $D_l$ in the above equation. In addition, this analysis is concerned only with the formation of droplets of respirable size. Therefore, the entrainment efficiency of concern to this analysis is actually a measure of the fraction of the kinetic energy that is transformed into the surface energy of droplets of respirable size. This

entrainment efficiency can be estimated based on the size distribution of the droplets formed by a pressure atomizer. The Sauter Mean Diameter (SMD) is the mean diameter of a distribution of droplet sizes based on the volume of liquid in the droplets. The SMD in meters of droplets formed by a plain circular orifice liquid jet pressure atomizer can be estimated by:

$$SMD = \frac{500 d_o^{1.2} \nu_L^{0.2}}{U_L} \qquad \text{(Eq. 11)}$$

Where:

$d_o$ = diameter of the orifice in meters,

$\nu_L$ = kinematic viscosity of the fluid in $m^2/s$, and

$U_L$ = fluid velocity in m/s.

Assuming the liquid is accelerated to the air jet velocity in the SWPF process vessel (very conservative) and the air line diameter is equivalent to the orifice diameter, the SMD can be estimated using Equation 11. Therefore, the velocity of the air jet and the diameter of the air line to the APA can be used with Equation 11 to conservatively estimate the SMD of the droplets formed by the air jet impinging on the liquid in the process vessel. Once the SMD is known, the fraction of the total droplets formed that are less than a given diameter can be determined. The SMD is related to the value V, where V is the fraction of droplets of diameter D or less, by the formula:

$$V = 1 - \exp\left[ -\Gamma\left(1 - \frac{1}{q}\right)^{-q} \left(\frac{D}{SMD}\right)^{q} \right] \qquad \text{(Eq. 12)}$$

In Equation 12, $\Gamma(x)$ is the gamma function. The variable q is a measure of the spread in droplet size and ranges from about 1.5 to 4 for many droplet generation processes. Assuming the value of q is 2.0, conservative because the droplet spread is wide for a q value of 1, then 1-1/q is 0.5 and the gamma function value of 0.5 is 1.772. Therefore, Equation 12 reduces to:

$$V = 1 - \exp\left[ -(1.772)^{-2} \left(\frac{D}{SMD}\right)^{2} \right] = 1 - \exp\left[ -0.3185 \left(\frac{D}{SMD}\right)^{2} \right] \qquad \text{(Eq. 13)}$$

The value V times the fraction of the kinetic energy of the air jet that goes into forming droplets can be considered to be the entrainment efficiency for creating droplets of diameter D and smaller.

#### 3.4.1.1.4 Leak Path Factor

The LPF is assumed to be 1.0 for unfiltered releases. For the SWPF AA, all releases were assumed to be unfiltered. Therefore, for all of the accidents analyzed, the LPF is set to a value of one.

### 3.4.1.2 Consequence Analysis

The dose associated with each event is then represented by the following equation:

$$DOSE = ST * DCF * BR * \chi/Q \qquad \text{(Eq. 14)}$$

Where:

ST = Source Term (Ci); Product of factors given in the equation above.
DCF = Dose Conversion Factor (rem/Ci)
BR = Breathing Rate (meter$^3$/sec)
$\chi/Q$ = Airborne Dispersion Factor (sec/meter$^3$)

Estimates of radiological consequences for receptors at specific distances and bounding radioactive waste forms can be performed using a Total Effective Dose (TED), wherein the above equation becomes:

$$DOSE = ST * \text{Per Unit TED} \qquad \text{(Eq. 15)}$$

Where:

ST = Source Term (volume of liquid radioactive material released)
TED = Dose Conversion Factor (rem/unit volume of radioactive liquid)

The assessments of radiological consequences for the selected events were made using the TED values for each event as determined in S-RPT-J-00008, *SWPF Impact of Revised Atmospheric Dispersion Parameters on Accident Consequences*[44]. For the determination of radiological consequences to the offsite receptor, these TED values are the results of the MELCOR Accident Consequence Code System 2 (MACCS2) software calculations for various release periods (e.g., 3-minute, 20-minute, 1-hour, 2-hour, and 8-hour). For the determination of the radiological consequences to the onsite receptor located at 100 meters from the release point, the TED values are determined using the constant $\chi/Q$ value from DOE-STD-1189-2008, *Integration of Safety into the Design Process*[45]. The onsite TED values are constant regardless of the release period. The TED is used to determine the total dose incurred by the receptor of interest from the amount of material, typically in gallons released into the atmosphere at the location of the event. The receptors of interest are the Onsite-2 receptor at 100 meters (an adult worker in an adjacent facility), and the Offsite receptor (an adult member of the general public at the SRS boundary).

The details of development of the TEDs and supporting references are described in S-RPT-J-00008[44]. The following inputs were used to develop the TEDs per unit volume:

- The offsite TED values are reported at the 95th quantile dose level as determined by the persistent 95th percentile meteorology determined from 5 years of SRS specific meteorological data documented in SRNL-STI-2012-00648, *Revised Meteorological Data Files for Safety Related Atmospheric Dispersion Modeling (U)*[46];
- The onsite TED values use the dispersion from Appendix A of DOE-STD-1189[45];
- The inhalation 50-yr Committed Effective Dose DCFs were based on International Commission on Radiological Protection (ICRP) Publication 68, *Dose Coefficients for Intakes of Radionuclides by Workers*[47] and ICRP Publication 72, *Age-dependent Doses to the Members of the Public from Intake of Radionuclides: Part 5*[48]. These publications give inhalation DCFs for the worker and general public;
- The site specific surface roughness of 160 centimeters, is used to determine the TEDs for the offsite receptor which combines the urban attributes of the operational area near the facility with the forested features of the site (see SRNL-STI-2012-00016, *Roughness Lengths for the Savannah River Site*[49]); and
- For a workplace population, a particle size of 5 micrometers (µm) Activity Median Aerodynamic Diameter (AMAD) is used consistent with the recommendations of ICRP Publication 68[47]. For members of the general public, a particle size of 1 µm AMAD is used, consistent with the recommendations of ICRP Publication 72[48].
- The determination of the Sr-90 DCF for the offsite receptor assumed that strontium formed strontium titanate which is a slow absorption type based on the current SRS atmospheric dispersion analysis as documented in S-CLC-G-00372, *Unit Total Dose Factors for Onsite and Offsite Receptors At SRS (U)*[50]. For the onsite receptor, the Sr-90 is not assumed to form strontium titanate but remain as elemental strontium, which is a fast absorption type as documented in S-CLC-J-00058, *SWPF Dose Conversion Factors*[51].

#### 3.4.1.3 Inputs and Assumptions

The following inputs and assumptions were used in development of the AA used to determine the consequences of accidents identified in the HA that might challenge the EG for the Offsite receptor or the Onsite receptor TOCs. Detailed justifications for the acceptability of the assumptions that are used in AA are provided in the calculations. Assumptions directly related to the AA are documented in the following list.

1. During Hot Operations, the SWPF normally operates with all plugs and hatch covers installed for equipment and personnel access openings to cells and enclosures. Personnel access to cells and enclosures is prohibited. Reconfiguring camera ports for cells and enclosures (e.g., removing plugs to insert cameras) is performed in accordance with written procedures. All transient combustibles are removed from the Process Vessel Cells during cell close-out prior to hot operations.

2. During normal operation, the ADS and PVVS operate together continuously to maintain sufficient air flow through the CPA process vessels, small process tanks, and contactors vapor spaces to prevent flammable vapor concentrations from exceeding 25% of the CLFL.
3. Deleted.
4. $H_2$ generation rates from radiolysis of the aqueous waste and the solvent for the CSSX Process are documented in S-CLC-J-00033[40]. In addition to $H_2$ from radiolysis of the aqueous waste and solvent, process vessel vapor spaces may contain flammable Volatile Organic Compounds (VOCs) from radiation-induced degradation of the solvent, and solvent due to the non-negligible vapor pressure of the CSSX solvent. Any contribution of flammable vapors from organic substances in the waste feed from the HTF is insignificant compared to the other sources. The contribution of $H_2$, VOCs from solvent degradation, and solvent to the CLFL and times to the CLFL is considered in such determinations for the process vessels. Thermolysis (thermal degradation of the CSSX solvent) was shown to not contribute to the formation of flammable gases at the temperatures which the SWPF processes could be reasonably expected to experience by testing (INL/EXT-09-15302, *CSSX Radiolytic $H_2$ Generation ["Thermolysis"] Final Report*[52]).
5. The $H_2$, flammable VOCs, and solvent vapor contribution to flammable vapor inventories in the process vessels is considered in setting flow rates for the PVVS and ADS.
6. Storage tank and process vessel inventories are as shown in Table 3.7-19.
7. Tanks and vessels are assumed to be at their overflow for determining the unmitigated consequences of events when that assumption results in the highest consequences. However, in some cases, smaller volumes of liquid with higher radionuclide concentrations may result in higher consequences. In that event, the lower volume case is used. If not apparent which of the cases is bounding, both cases are analyzed to ensure that the bounding case is identified.
8. Waste feed from the Tank Farms complies with the SWPF WAC to protect, as ICs, the bounding radionuclide concentration used to estimate radiological consequences, times to CLFL, etc. Individual concentrations of radionuclides in the Tank Farm feed may exceed the individual concentrations used in the AA. However, the cumulative dose contribution from other radionuclide and solid estimates conservatively bound any individual concentration that may be nominally exceeded.
9. For explosion event consequences, solvent constituent vapor pressures as measured by testing (*Test Plan for the Determination of Isopar L Vapor over CSSX Solvent and the Test Results*[53]) are assumed.
10. Explosion events are only assumed to occur in process vessels where the time to reach CLFL in the vapor space is less than 10 days. It is assumed that within 10 days, one or more of the following actions would prevent the deflagration/detonation in CPA process vessels: restoration of normal PVVS operation, restoration of normal ADS operation, air sparging using the APA pulse pots (AST-A [TK-101], Wash Water Hold Tank [WWHT] [TK-105], SSRT [TK-104], FFT-A [TK-102], and Salt Solution Feed Tank [SSFT] [TK-109] only), using a portable compressor, installation of temporary blowers to the PVVS header, installation of temporary air compressors to provide air flow to the ADS, or replenishment of

the ADS air supply. Similarly, it is assumed that within 10 days, one or more of the following actions would prevent the deflagration/detonation in AFF process vessels:

a) Restoration of normal air purge to the vessel headspace,

b) Installation of temporary air compressors to provide an air purge supply to the vessel headspaces,

c) Restoration of air supply to the bubbler level instruments that indirectly purges each vessel headspace, or

d) Transfers out of the vessels as necessary to ensure extremely lengthy minimum times to reach CLFL.

11. The required constituents of the CSSX solvent and maximum concentration of alcohols in MST shall be identified in appropriate procurement specification and verified by receipt inspection.

12. The SEHT (TK-205) is assumed to be filled with strip effluent containing 82 Ci/gal of $^{137}$Cs and $^{137m}$Barium (Ba) in equilibrium with the Cs.

13. It is assumed that Yttrium-90 ($^{90}$Y) is sorbed by the MST for the single-strike case, but is not sorbed by the MST for the two-strike case. The behavior of $^{90}$Y with respect to MST sorption is not known. Assuming the $^{90}$Y is sorbed by the MST for the single-strike case maximizes the radionuclide inventory in the ASP process vessels and streams. Assuming the $^{90}$Y is not sorbed by the MST for the two-strike case maximizes the radionuclide inventory in the CSSX and AFF process vessels and streams.

14. Turbidity detectors are provided for the CSSX stream from the SSFT (TK-109) to detect filter breakthrough and stop the salt solution feed pumps. This assumption limits the amount of solids carried over from the ASP to the CSSX and AFF processes.

15. Gamma detectors are provided on the discharge of the Ba-137 Decay Tank (BDT) (TK-206) to prevent carryover of significant quantities of $^{137}$Cs to the AFF process.

16. The process vessel design complies with the applicable requirements of NFPA 30, *Flammable and Combustible Liquids Code*[54], for vessel grounding.

17. CSSX solvent is assumed to be present in all process vessels.

18. The normal and accident solvent volumes that may be present in the primary process vessels (AST-A [TK-101], FFT-A [TK-102], SSRT [TK-104], SSFT [TK-109], SEHT [TK-205], WWHT [TK-105], Spent Acid Storage Tank [SAST] [TK-127], Alpha Sorption Drain Tank [ASDT] [TK-601], Cleaning Solution Dump Tank-A [CSDT-A] [TK-103], Lab Drain Tank [TK-235], BDT [TK-206], Strip Effluent Pump Tank [TK-215], Intermediate Storage Tank [IST] [TK-220], Alpha Sorption Tank-B [AST-B] [TK-221], FFT-B [TK-222], MSTT [TK-224], Decontaminated Salt Solution Hold Tank [DSSHT] [TK-207], Cleaning Solution Dump Tank-B [CSDT-B] [TK-223], and Alpha Finishing Drain Tank [AFDT] [TK-228]) are defined in 00-700-23945, *Solvent Volumes Assumed to be Present in Process Vessels*[55]. The normal solvent volume represents the solvent volume that could accumulated over time in the process vessel during normal processing operation due to solvent carryover. The accident

solvent volume represents the case where a mistransfer event results in the entire SWPF operating CSSX solvent volume (500 gallons) being transferred to a single vessel. The accident solvent volume only applies to process vessels that could directly receive the mistransfer of the solvent (SSFT [TK-109], SEHT [TK-205], Lab Drain Tank [TK-235], and BDT [TK-206]). Solvent volumes used in the AA for all other process vessels is as defined in S-CLC-J-00033[40].

19. The concentration of solvent in the vapor space is in equilibrium with the concentration in the liquid, as determined by the solvent vapor pressure, and that solvent vapor is instantaneously released to the vapor space. There will be solvent present in the vapor space, due to the vapor pressure but the solvent vapor will not be instantaneously released. A lag in release of the solvent to the vapor space will result in a lower initial solvent concentration in the vapor space, due to sweeping of the vapor space by the ventilation flow. However, once the ventilation flow stops, the equilibrium conditions assumed in this analysis will soon evolve.

20. In addition to $H_2$, radiolytic decomposition of the CSSX solvent generates flammable VOCs. The flammable VOCs generated by radiolytic decomposition of the CSSX solvent have been determined by experimentation (ORNL/TM-2007/093[43]). The experiments determined that, in addition to $H_2$, methane, carbon monoxide, ethane, propane, butane, hexane, pentane, propene, isobutane, methylpropane, methylbutane, pentene, and tetrafluoropropane, are the VOCs present in the vapor space as the result of radiolytic decomposition of the CSSX solvent. The presence of these flammable VOCs is accounted for in the determination of time to reach flammable conditions and in determining the required flow rates for the ADS and PVVS. The rate of generation for $H_2$ and flammable VOCs, due to radiolytic decomposition of the CSSX solvent used in these analyses, are those determined by the experiments.

21. It is assumed that Americium (Am)-242 is present in the SWPF process vessels in the same concentration as $^{242m}$Am. The radionuclide inventories provided by S-CLC-J-00029[22] include $^{242m}$Am, but do not include $^{242}$Am. However, $^{242}$Am is the daughter product of $^{242m}$Am and is expected to be in equilibrium. Because $^{242m}$Am decays to $^{242}$Am 99.55% of the time (DOE/RW-0006, *Integrated Data Base Report – 1996: U. S. Spent Nuclear Fuel and Radioactive Waste Inventories, Projections, and Characteristics*[56]), the concentration of the $^{242m}$Am and $^{242}$Am is expected to be the same at equilibrium conditions.

22. In determining unmitigated radiological consequences, the maximum duration of an accident is eight hours. The eight-hour maximum accident duration is consistent with the recommended practice in DOE-STD-3009-94, Change Notice No. 3[3].

23. In determining the consequences of potential fires, it is assumed that cell fires are fully ventilated. This is a conservative assumption that results in the release of radioactive material by the fire in the shortest possible time.

24. In order for a sustained solvent fire to occur, there must be an energy source that locally heats the solvent layer to a temperature above the solvent's flash point, the energy source must provide enough heat to ignite the flammable solvent vapor, and the energy source must generate a sufficiently large locally heated region to sustain combustion.

25. External recirculation pumps and the APAs in all vessels are tripped at 12 hours after the loss of vessel cooling and ventilation has occurred if the loss of cooling and ventilation is not caused by a significant plant wide event such as a seismic event or an event that results in loss of support systems required for operation of the pumps and APAs. SWPF operating crew shifts are 12 hours in length. Therefore, by 12 hours after the occurrence of a loss of vessel cooling and ventilation to a vessel the operating crew will be replaced. As part of shift turnover, the outgoing crew and ongoing crew will review the status of the facility. If the original operating crew had not identified the loss of vessel cooling and ventilation, the shift change process would provide a high likelihood that the failure would be discovered at that time and the external recirculation pumps and APAs tripped. Therefore, the maximum duration for the pumps and APAs to runs would be 12 hours.

26. All external mechanical devices that add heat to process vessels (e.g., external recirculating pumps and APAs) are shut down within 2 hours of a seismic event. The occurrence of a seismic event would provide clear indication of the need for operator response. One response to a seismic event will be to shut down all pumps and APAs operating at the time the event occurred. Because there is no delay in the notification to the operators for the required action of stopping the pumps and APAs, 2 hours is more than sufficient time for the action to be completed.

27. It is assumed that the contents of all of the process vessels that may contain significant quantities of solids are well mixed at the start of any accident. During normal operation, the solids containing process vessels are continuously mixed to ensure that the contents of the vessels will support the SWPF process. Therefore, any failure of the mixing capability for a vessel would result in a loss of ability to maintain the process. This would require an immediate response to re-establish the mixing. Therefore, the duration of time for any loss of mixing is expected to be limited and it is reasonable to assume that the contents of the process vessels are well mixed at the beginning of any independent accident.

28. The total $^{90}$Sr concentration in the feed to the SWPF is limited to no more than 0.112 Ci/gal and the $^{137}$Cs concentration in the feed is limited to no more than 2.0 Ci/gal. These limits are necessary to ensure that the AA for SWPF remains bounding in the event that the $H_2$ generation rate due to radiolysis and thermolysis increases over the currently calculated values due to the impact of dissolved organics in the process liquid. The need for this limit on the $^{90}$Sr and $^{137}$Cs feed is defined in S-RPT-J-00011, *SWPF Impact of SRS Liquid Waste HGR PISAs on the SWPF Safety Basis*[57].

29. The ADS backup air receivers provide a stored air supply sufficient to provide air purge to the process vessels to prevent reaching CLFL in the vessel vapor spaces for four days after the loss of normal air supply.

30. Other running external recirculation pumps and APAs as applicable for the FFT-A, SSRT, and FFT-B are tripped within one hour of the occurrence of the automatic trip of the large filter recirculation pump.

31. It is assumed that if flammable conditions in a process vessel vapor space are reached within 10 days after loss of normal vessel cooling and ventilation, an explosion occurs without

regard to ignition source and the explosion takes the form of a detonation and not a deflagration for the purpose of determining radiological consequences. This results in a conservative estimate of the consequences of an explosion in the process vessels because a detonation generates a larger volume of aerosolized material than a deflagration.

32. For the purposes of flammability analysis, it is assumed that the temperature of the vessel contents at the time cooling, ventilation, and purge are lost, are bounded by the following values: 92°F for AST-A (TK-101), FFT-A (TK-102), SSRT (TK-104), and SSFT (TK-109); 95°F for WWHT (TK-105); and 82°F for SEHT (TK-205). These temperature limits were selected to be conservative to normal tank operating conditions and shall be protected via the TSRs per management discretion. These six vessels are the large-volume vessels in the Process Vessel Cells that normally contain the majority of the liquid waste volume and radioactive inventory within the CPA.

### 3.4.2 Design Basis Accidents

As discussed in Section 3.3.2.3.5, the HA identified a number of events with high consequences to the Onsite-2 receptor to be carried forward for further analysis. These events were combined into five groups that meet the definition of DBAs for formal AA. This section will discuss these DBAs and the analysis of the events in detail. Each of the five DBAs is discussed individually in the following sections.

#### 3.4.2.1 Process Vessel Cell Fire

The HA identified Process Vessel Cell Fire event with unmitigated consequences that potentially exceed the TOC for both the facility worker (Onsite-1 receptor) and the co-located worker (Onsite-2 receptor), but do not challenge the EG for the Offsite receptor. This event involves solvent fires in Process Vessel Cells. Specifically, this event involves a solvent fire in the AST-A, FFT-A, SSRT/WWHT, or SSFT Process Vessel Cells. This event is discussed in this subchapter.

##### 3.4.2.1.1 Scenario Development

One general class of fire events identified in the HA for the SWPF meets the requirements to be considered a DBA. This class of fire events is a Process Vessel Cell Fire. The Process Vessel Cell Fire is defined as a leak or spill of the material in a Process Vessel in the Process Vessel Cell occurs and the mixture of the radioactive waste and CSSX solvent accumulates in the Process Cell. The combustible CSSX solvent then ignites and burns, resulting the release of a portion of the radioactive material. The Process Vessel Cell Fire is limited to the AST-A, FFT-A, SSRT/WWHT, and SSFT Process Vessel Cell. The SEHT Process Vessel Cell is excluded because the radiological contents of the SEHT Process Vessel have significantly lower potential consequences than the other Process Vessels. The HA qualitatively assigned a frequency of Unlikely (U) for all fire events at SWPF. This assignment was based on the assumption that initiation of a fire is assumed to occur although no credible means of initiating a fire was identified. The following discusses the mechanisms required to result in ignition of a CSSX solvent fire.

A fire that involves the radiological material contained in the SWPF has the potential to generate significant consequences to the workers and the public. The fire provides a significant energy source that may result in the dispersal of the material. To minimize the risk of fires that might significantly impact the radiological material, the SWPF is designed and constructed to limit the ability of fires to start and propagate. This is done by minimizing the ignition sources and combustible materials (both fixed and transient) in the facility. The limited use of combustible material in areas where radiological material is present greatly reduces the likelihood of fire that results in the release of radiological material. However, The SWPF process utilizes an Isopar®L-based solvent to separate $^{137}$Cs from the waste in the CSSX process. This solvent is a combustible material that is in intimate contact with the radiological material in the SWPF. Therefore, the solvent does pose a significant risk as a fire source that could impact radiological material. This is the focus of the fire events addressed in this section.

This solvent has a measured flash point of 148°F (ORNL/TM-2007/093[43]). The bulk solvent temperature will not approach the flash point temperature at any time from waste decay heat alone. For example, the SEHT (TK-205) has the largest decay heat load of the waste contained in the SWPF large process vessels. Based on information provided in S-CLC-J-00032, *Heat-up of the SEHT under Loss of Cooling Conditions*[58] the decay heat associated with the SEHT's (TK-205) contents would take greater than 60 days to reach the solvent flash point at the design basis concentration of $^{137}$Cs and maximum fill, with no tank cooling or ventilation flow. Therefore, the mechanism of heating the solvent to the flash point and possibly to the fire point temperature due to radioactive decay heat is not the likely sequence to have a sustained solvent fire. The possibility of pump operations heating waste during recirculation is addressed for explosion events (Section 3.4.2.2). However, a sustained solvent fire is possible with the appropriate conditions when the bulk solvent temperature is sub-cooled, with respect to the flash point.

The potential for igniting a sustained solvent fire has been examined for the Hanford waste storage tanks (HNF-4240, *Organic Solvent Topical Report*[59]). Igniting a sustained solvent fire when the bulk solvent temperature is less than the flash point requires an energy source large enough to locally heat the solvent above the flash point and ignite a region of sufficient size to allow flame spreading on the remaining pool liquid. The following is a summary of the findings from the Hanford study for dodecane:

1. There is a minimum organic layer (approximately 0.1 inch) that is required to support a propagating flame (thinner layers do not support a propagating flame);
2. A minimum 6-inch (4 inches near the edge) diameter standing (or wick-stabilized) flame is required to provide sufficient energy to spread the flame on the pool of liquid radioactive waste covered by a sufficiently thick layer of solvent;
3. A static spark cannot ignite combustible liquids that are well below their flash point(s); and
4. Based on the experiments, documented in the Hanford study, credible ignition sources for the Hanford Site waste tanks (in-tank instrumentation, welding, grinding, light hot filament, and shorting 120-volt electrical wires) are not sufficiently energetic to cause a sustained solvent fire.

These conclusions would also be applicable to the CSSX solvent with temperature well below the flash point in the SWPF because of the similar physical and chemical properties between dodecane and the primary constituent of the CSSX solvent (Isopar®L). Therefore, solvent fires inside the Process Vessel Cells have no identified initiators. However, solvent fires in the Process Vessel Cells are assumed to initiate due to unknown causes.

The Process Vessel Cell Fire event includes spilling or leaking of a solvent waste mixture in the areas with an undefined ignition source present that causes a sustained solvent fire. The ASP process has the solvent contained within the system. ASP components are all contained within restricted access areas. Solvent may be present in the piping and components located in the Process Vessel Cells due to the long term build-up of solvent in the ASP process vessels or a mis-directed transfer event. Therefore, because the presence of solvent cannot be excluded, a solvent fire is considered as a possible event for the Process Vessel Cells.

#### 3.4.2.1.2 Source Term Analysis

The same airborne release model is used for all fire events. The model is described above in Section 3.4.1.1. The volume of solvent consumed and the fire duration are evaluated. The volume of waste boiled with the volume of solvent burned, which acts as the ST, was determined. The appropriate ARF is selected from the three bounding ARFs for organic fires (from DOE-HDBK-3010-94, Change Notice 1[5]), based on a comparison of the criteria provided in the Handbook and the particular solvent fire event being analyzed. The MAR utilized in the analysis is based on the conservative determinations of maximum radionuclide concentrations in the ASP Process Vessels as documented in S-CLC-J-00029[22]. Available solvent volumes in the ASP Process Vessels are those as discussed in the AA assumptions listed in Section 3.4.2.

The source term analysis for the Process Vessel Cell Fire events involving the maximum actinide concentrations in aqueous waste assumed that the impact of the Cs-137 dissolved in the solvent being burned was negligible. This assumption is appropriate given the following over conservatisms in the analysis of the cell fire event.

- The chronic solvent volumes assumed to be in aqueous process vessels by Safety Basis inventories are extremely conservative. The volume of aqueous waste assumed to be boiled off by the energy released from the solvent fire is correspondingly overestimated.
- Assuming that 100% of the solvent present in a tank is capable of moving to the surrounding cell and being consumed in the cell fire is extremely conservative.
- Assuming that the concentration of actinides in the aqueous waste in the cell sump is the same as the bounding concentration for a process vessel is extremely conservative. The process vessel cell sumps normally contain several hundred gallons of liquid which would dilute the concentration of radionuclides as a tank contents entered the sump.

The possible increase in the bounding cell fire dose due to the presence of concentrated Cs-137 in the solvent is less than 2% of the calculated bounding dose. The incremental dose increase is

outweighed by other conservatisms in the analysis (see 00-700-26798, *Contribution of the Cs-137 in Solvent to the ASP Cell Fire Inhalation Doses*[60]).

#### 3.4.2.1.3 Consequence Analysis

The potential unmitigated radiological consequences to both the Onsite receptor located at 100 meters from the release point (Onsite-2) and Offsite receptors of Process Vessel Cell Fire events have been analyzed (S-CLC-J-00041[39]). The ventilation flow rates generated by the PBVS permit complete combustion of the solvent in minutes, rather than hours.

The analysis documented in S-CLC-J-00041[39] demonstrated that the unmitigated radiological consequences to the Offsite receptor for the Process Vessel Cell fires at SWPF are less than 1 rem. The analysis demonstrated that the unmitigated radiological consequence to the Onsite-2 receptor for the worst case Process Vessel Cell Fire event is greater than 100 rem. This is the bounding consequence for all Process Vessel Cell Fires.

#### 3.4.2.1.4 Comparison to the Evaluation Guideline

In all cases, the unmitigated consequences of a Process Vessel Cell Fire are considered to be well below the EG, and SC controls are not required to either prevent or mitigate the Process Vessel Cell Fire event at SWPF to protect the health and safety of the Offsite receptor. Additionally, the unmitigated consequences to the Onsite-2 receptor do exceed the TOC. Based on this consideration, SS controls are required to either prevent or mitigate the Process Vessel Cell Fire at SWPF to protect the health and safety of the Onsite-2 receptor.

Consequences to the immediate worker (Onsite-1) were not evaluated explicitly in S-CLC-J-00041[39]. However, the potential exists for a Process Vessel Cell Fire to result in significant harm to a facility worker located in close proximity to the location of the event. Based on this consideration, SS controls are required to either prevent or mitigate a Process Vessel Cell Fire at SWPF to protect the health and safety of the Onsite-1 receptor.

#### 3.4.2.1.5 Summary of Safety-Class and Safety Significant SSCs, SACs, and TSR Controls

Because the unmitigated consequences to the Offsite receptor were shown to be well below the EG, no SC controls are required. However, because the consequences to the Onsite-1 and Onsite-2 receptors were deemed to be significant, SS controls were selected.

A Process Vessel Cell fire event is judged to cause fatal or life-threatening injuries to any personnel who are present in the cell at the time the fire occurs. Therefore, the primary preventive feature to prevent fatal or life-threatening injury to the facility worker from a Process Vessel Cell Fire is to restrict access to the areas. Therefore, the Process Vessel Cells are designed to be unoccupied for the life of the facility and entry is prohibited after initial commencement of radioactive operations.

In order for a Process Vessel Cell fire to become a radiological concern, a significant quantity of radioactive waste with a high dose potential must be available to be acted on by the fire and a

significant quantity of solvent must be available to provide fuel for the fire. The waste and solvent in the Process Vessel Cells is normally contained in vessels or piping. Therefore, the solvent must be spilled to create the conditions for the fire and the radiological release. To prevent this, the waste piping and process vessels in the Process Vessel Cells that contains material with a potential to cause a significant radiological consequence provides primary confinement of the waste material.

The PBVS also provides a filtered release path for the Process Vessel Cells. The filtered release path mitigates the potential exposure of the Onsite-1 and Onsite-2 workers from a Process Vessel Cell Fire event.

If flammable conditions are reached in the Process Vessel Cells, potential ignition sources are prevented from entering or being created in the cell by the Ignition Source Control Program. In addition, the process vessels are grounded per NFPA 30[54] to reduce the potential for a spark from a static discharge. Additionally, the Process Vessel Cell walls and ceilings prevent a fire external from cell resulting in a fire inside the Process Vessel Cell. The Process Cell walls and Operating Deck floor are required to provide sufficient fire resistance and insulation to act as a fire barrier. This limits the probability of a fire occurring in a Process Vessel Cell, even if flammable vapor conditions are reached.

The controls in the following lists summarize the controls and their safety functions credited for this DBA and as discussed in detail in the previous text in this section. The controls in the following list are identified as either a preventive control (P) or as a mitigative control (M). Each control includes a control identifier number to allow cross referencing to the controls developed from the HA and other DBAs. The preventive and mitigative controls that constitute the first Level of Control (1$^{st}$ LOC) are identified appropriately (i.e., 1$^{st}$ LOC). The 1$^{st}$ LOCs are defined as the group of controls that taken together are the minimum set of controls that provide adequate protection of the health and safety of the offsite and onsite receptors from the postulated consequences of the identified DBA. Other preventive and mitigative controls identified in the following list provide additional assurance of protection of the health and safety of the offsite and onsite receptors beyond that provided by the 1$^{st}$ LOCs alone and provide defense-in-depth. Administrative controls that are included in the 1$^{st}$ LOC are required to be SACs. All SS controls developed in the AA are listed in Table 3.7-22.

In addition to the mitigative or preventive SS controls, some ICs that are important to maintain the validity of the analysis were also designated as SS for Process Vessel Cell Fire events. These SS ICs for the fire in the Process Vessel Cells are:

- IC-1: Access Controls (Personnel entry into the Process Vessel Cells is prohibited following initial commencement of radioactive operations.);

- IC-4: CPA Walls/Ceilings Surrounding Process Vessel Cells (Provide a fire barrier to prevent spread of internal and external fires into Process Vessel Cells); and

The following controls are credited with preventing or reducing the frequency or consequence of a fire in the Process Vessel Cells:

- (M) EC-8: PBVS (provides a filtered relief path for the Process Vessel Cells);
- (P) EC-17: Process vessels and equipment within the Process Vessel Cells (AST-A [TK-101], FFT-A [TK-102], SSRT [TK-104], SSFT [TK-109], and WWHT [TK-105]); 1st LOC
- (P) EC-17: Waste Piping (Process lines within the Process Vessel Cells exiting the AST-A [TK-101], FFT-A [TK-102], SSRT [TK-104], SSFT [TK-109], WWHT [TK-105], and WTE to AST-A piping); 1st LOC
- (P) EC-7: Grounding per NFPA 30[54] (Vessels in the Process Vessel Cells are grounded to reduce potential for a spark from a static discharge); 1st LOC and
- (P) AC-7: Ignition Source Control Program 1st LOC.

After the application of the 1st LOC controls listed above the occurrence of the Process Vessel Cell Fire event is prevented and, therefore, there are no mitigated consequences to Offsite, Onsite-1, and Onsite-2 receptors. This reduction in the frequency of the Process Cell Fire event is due to the fact that the controls that are designated as the 1st LOC are preventive and prevent the Process Cell Fire event from occurring in the first place. A prerequisite for a Process Cell Fire event is the spill of the waste material including the CSSX solvent that may be contained in the Process Vessels or waste piping in the Process Cells into the Process Cells. Once the waste and solvent has been spilled, an ignition source must be present to initiate the fire event. Taken together, the 1st LOCs as identified above prevent this from occurring and, therefore, prevent the Process Cell Fire event from occurring.

#### 3.4.2.2 ASP Process Vessel Explosion

The HA identified explosion events occurring in ASP process vessels with unmitigated consequences that potentially exceed the TOC for both the facility worker (Onsite-1 receptor) and co-located worker (Onsite-2 receptor), but do not challenge the EG for the Offsite receptor. These explosion events all involve potential explosions occurring inside the vapor space of a process vessel. The SWPF process vessels contain the radioactive waste during processing. Because the generation of flammable vapors in the process vessel vapor space is the product of radiolysis of the water and solvent and the vapor pressure of the solvent that may be present in the waste stream, and the process vessels contain the majority of the waste at any given moment, the process vessels are the locations in which flammable vapor generation is most likely to occur and result in the highest risk of reaching flammable conditions. Additionally, the process vessels contain the majority of the waste, which is the primary source of radiological risk to receptors. Therefore, an explosion in a process vessel presents the highest risk to the Onsite receptors of any of the explosions. This event is discussed in this subchapter.

#### 3.4.2.2.1 Scenario Description

The HA identified an explosion in an ASP Process Vessel as an event that meets the requirements to be considered a DBA. An ASP Process Vessel Explosion event can involve either a mixed vessel with no solids layer or an unmixed vessel with the potential to trap flammable $H_2$ gas in the solids layer. In mixed vessels and vessels without significant solids, the flammable vapor is released to the process vessel vapor space after the flammable vapor exceeds the solubility in the liquid waste (no delay is assumed between the flammable vapor generation and the release to the vapor space). Flammable vapor in the vessel vapor space is assumed to reach flammable condition and explodes and releases radioactive material. An ignition source is assumed to be present. For the unmixed vessels with high solids concentration, agitation of the solids in a process vessel after an extended period of quiescence would cause a rapid release of the trapped flammable vapors (assumed to be instantaneous). The flammable vapor concentration in the vessel vapor space is assumed to exceed the CLFL and explodes, releasing radioactive material. The HA qualitatively assigned a frequency of Extremely Unlikely (EU) for all explosion events at SWPF. This assignment was based on the assumption that initiation of an explosion is assumed to occur if the proper conditions are present without an identified means of ignition. This frequency assignment reflects the fact that explosions are more difficult to initiate than fires. The potential development of the conditions for an explosion in an ASP Process Vessel are discussed in the following.

The decay of radioactive atoms in the liquid waste causes disassociation of water molecules (radiolysis), which generates flammable $H_2$ vapor. In addition, radiolysis of the organic solvent used in the SWPF may also occur. The radiolytic decomposition of the CSSX solvent generates not only $H_2$, but also generates flammable VOCs such as methane, carbon monoxide, ethane, propane, butane, hexane, pentane, propene, isobutane, methylpropane, methylbutane, pentene, and tetrafluoropropane. The major component of the CSSX solvent, Isopar®L, is also flammable and will be present in the vapor space over any liquid containing the solvent in a concentration determined by the vapor pressure of the solvent. In a process vessel containing radioactive liquid waste, postulated explosion (deflagration or detonation) events result from the accumulation of flammable radiolytic $H_2$ vapor in the vapor space of the vessel. If CSSX solvent is also present in the waste, flammable VOCs and Isopar®L vapor also accumulates in the vapor space. For unmitigated risk determination, an ignition source is assumed present to initiate a deflagration or detonation.

To support an explosion, the flammable vapor concentration must increase to at least the CLFL of the vapor mixture. This is the concentration of a given mixture of flammable vapors that supports propagation of a flame front throughout the vapor space. Note that, for a mixture containing both $H_2$ and flammable VOCs, either a deflagration or a detonation may occur if the CLFL is exceeded. Explosion events are only assumed to occur in process vessels where the time to reach CLFL in the vapor space is less than 10 days. It is assumed that within 10 days, a means to prevent the deflagration/detonation will be made available.

The explosion could take the form of either a deflagration or detonation, depending on the physical arrangement of the area in which the explosion occurs. A deflagration is by definition

an explosion in which the flame front travels at subsonic speeds. A detonation is an explosion in which the flame front travels at supersonic speeds. Because the sonic barrier is exceeded in a detonation, a shock wave is generated that results in much higher pressures than for a deflagration.

The explosion generates significant aerodynamic entrainment forces and, for detonation, shock waves that act on the surface of the process vessel liquid. The entrainment forces and shock wave result in the generation of significant quantities of aerosols. The aerosols may provide a significant hazard to the Onsite and Offsite receptors.

During normal operations, flammable vapor build-up to CLFL concentrations in the vapor spaces of the ASP process vessels is prevented by the normal continuous purge air supply through the ADS to the vessels and by the PVVS. The ADS supplies continuous air flow to the vessel vapor space. The air flow sweeps the flammable vapor from the vapor space and then exits the vessel through the PVVS. Most vessels are also provided with an orifice that allows air from the cell or enclosure surrounding the vessel to be drawn through the vessel vapor space by the PVVS, providing additional purging of the flammable vapors from the vessel. For any of the process vessels, if the purge of the vessel vapor space stops, the flammable vapor concentration in the vapor space begins to increase until CLFL is reached. At that point, an explosion is possible if an ignition source is present. The time required for the process vessel vapor space to reach flammable conditions depends on the flammable vapor generation rate of the waste and the temperature of the waste. This, in turn, depends on the concentration of radionuclides present in the waste and any external heat sources to the waste, such as recirculating pumps. Higher concentrations of radionuclides and higher temperatures in the waste result in higher flammable vapor generation rates and shorter times before CLFL is reached in the vessel vapor space.

Various conditions and mechanisms are associated with the accumulation of flammable vapors in a process vessel vapor space that may result in an explosion. In waste containing low concentrations of solids, the flammable vapor dissolves in the liquid at a concentration dependent on the solubility in the waste. Once the maximum dissolved flammable vapor concentration in the waste is reached, equilibrium concentrations between the flammable vapor in the liquid and in the vessel vapor space that is dependent on the pressure and temperature of the vessel, the flammable vapor generation rates, and the ventilation purge flow rate is established. If ventilation purge flow is interrupted, the flammable vapor begins to accumulate in the vessel vapor space.

In waste containing high concentrations of solids (i.e., MST/sludge slurry), the formation of a layer of concentrated solids in the bottom of the vessel results in the possibility of generating pockets of trapped flammable vapor in the solids layer. Bubbles or voids of flammable vapor (trapped gas) may form in the solids layer, in addition to the flammable vapor that is dissolved in the waste. Mixing of the solids releases the trapped flammable vapor bubbles to the vessel vapor space. The sudden release of flammable vapor can result in exceeding the CLFL in the process vessel vapor space, even with PVVS operating. To prevent this from occurring, the solids are agitated on a regular basis before sufficient trapped flammable vapor can build up in the solids layer to result in exceeding the CLFL, if released.

Another factor having a significant impact on the potential for an explosion occurring in a process vessel is the temperature of the liquid and vapor space in the vessel. The temperature impacts the flammability of the vapor in the process vessel in several ways. First, flammability is a volumetric phenomenon and, as the temperature of a gas increases, the volume and the flammability increase. The LFL of a flammable gas decreases as the temperature increases, leading to flammable conditions at lower concentrations of gases as the temperature increases. Additionally, the vapor pressure of the Isopar®L in the CSSX solvent increases as the temperature increases, resulting in a higher concentration of flammable Isopar®L in the vapor space as the temperature increases. There are two primary heat sources associated with the process vessels. The first is the decay heat generated by the radioactive decay of the waste in the process vessels. The second is external heat addition sources, such as pumps used to recirculate and sample the liquid in the process vessels and the APAs used to mix the high solids process vessels. The pumps add heat to the liquid passing through the pump and returned to the vessel. The APAs perform work on the process fluid in a vessel and some of that work is converted to heat in the liquid. To prevent overheating of the process liquid in the vessels during normal operations, the process vessels are provided with cooling systems to remove the heat generated by radioactive decay and external sources and prevent excessive temperatures of the liquid. However, if the cooling systems are lost, the increasing temperature of the process liquid can significantly shorten the time to reach flammable conditions if the flammable vapor control systems are also lost. In determining the vessel heat-up, the external recirculating pumps and APAs continue to run for 12 hours after loss of vessel cooling if the loss of cooling is not caused by a significant plant wide event such as a seismic event or an event that results in loss of support systems required for operation of the pumps and APAs. If the loss of cooling is due to plant wide event such as a seismic event, the pumps and APAs are assumed to continue to run for 2 hours.

ASP process vessels that are susceptible to potential explosions include the AST-A (TK-101), FFT-A (TK-102), SSRT (TK-104), WWHT (TK-105), SSFT (TK-109), SAST (TK-127), ASDT (TK-601), Lab Drain Tank (TK-235), and CSDT-A (TK-103). The ASP process handles waste with the highest solids concentrations and some of the highest radionuclide concentrations of all the waste streams in SWPF. Therefore, ASP vessels are susceptible to explosions resulting from flammable vapor generated in, and released directly from, the waste and from trapped flammable vapor scenarios. Under normal conditions, significant solids concentrations are limited to AST-A (TK-101), FFT-A (TK-102), and the SSRT (TK-104). However, incorrect operation such as a missed MST strike in the AST-A (TK-101) or filter failure during filter recirculation operations could result in significant solids concentration in WWHT (TK-105) (from SSRT [TK-104]) and SSFT (TK-109) (from FFT-A [TK-102]). Additionally, errors in alignment during waste transfer operations could result in waste with significant solids concentration being transferred to ASP vessels that do not normally contain high solids concentrations. Such misdirected transfers could result in high solids concentrations in SAST (TK-127), ASDT (TK-601), Lab Drain Tank (TK-235), or CSDT-A (TK-103) from other ASP vessels. Therefore, all ASP process vessels are assumed to be susceptible to having high solids concentration in the waste in the vessel.

It is also possible that there will be at least some volume of CSSX solvent present in each of the ASP process vessels. During normal single-strike operations, none of the waste in the ASP

process vessels is exposed to the CSSX solvent in the CSSX process. However, during normal two-strike operation, waste from the AFF process is sent to the SSRT (TK-104) after the second MST addition and filtering operation in the AFF. Some solvent is expected to be carried over from the CSSX process to the AFF, and then from the AFF to the ASP. Therefore, it is assumed that all of the ASP process vessels contain CSSX solvent. The amount of solvent present in the vessels is generally relatively small. However, a significant quantity of solvent is possibly present in the SSFT (TK-109). The radiation detector at the exit of BDT (TK-206) automatically routes the discharge to the SSFT (TK-109) via a process interlock, if high gamma radiation levels are detected. This could result in up to 500 gallons of CSSX solvent being routed to SSFT (TK-109). This potential solvent misdirection event is considered in determining the time to reach CLFL and the consequences for an explosion in the SSFT (TK-109).

If the solids concentration in an ASP vessel is not at a high enough concentration to form a solids layer that traps the flammable vapor formed, the flammable vapors are released to the vapor space at the rate they are generated in the vessel, once the flammable vapors in the liquid are at their saturation concentration. The flammable vapors in the process vessel vapor space are then removed from the vessel by the continuous ADS purge flow and PVVS to prevent build-up of the flammable vapors to the CLFL concentration. If the purge flow and PVVS are lost due to system failure (loss of power [LOP]), a seismic event, or other means, the flammable vapor concentrations in the vessel vapor space will begin to increase until CLFL is reached. If vessel cooling is lost, the process liquid in the vessel heats up due to the addition of heat from radioactive decay and from external recirculation pumps and APAs if they continue to operate. It is assumed that the pumps and APAs will continue to operate for 12 hours after vessel cooling is lost if vessel cooling is not lost due to a plant wide event such as a seismic event. The pumps and APAs are assumed to continue to operate for 2 hours if the loss of cooling is due to a plant wide event such as a seismic event. For the ASP Process Vessel Explosion event, the pumps and APAs are assumed to operate for 12 hours after the start of the event because the event is not a plant wide event. The increase in temperature will decrease the time to reach CLFL. Once flammable conditions are reached in the process vessel vapor space, an ignition source such as a spark due to a static discharge is assumed to occur. Ignition of the flammable vapors in the process vessel vapor space results in an explosion. The explosion generates entrainment forces that aerosolize a portion of the liquid waste surface. The aerosolized waste is then released from the process vessel, resulting in potentially significant consequences to the Onsite and Offsite receptors.

If the solids concentration in an ASP process vessel is at a high enough concentration to form a solids layer (assuming the vessel liquid is not agitated) to trap flammable vapor bubbles, the flammable vapors continue to accumulate in the trapped layer, even after the vapors in the liquid reach their saturation concentration. It is possible that enough flammable vapors are trapped in the solids layer to form a flammable vapor mixture in the process vessel vapor space, if the vapor is all released to the vapor space at one time. The volume of flammable vapor that is trapped in the solids layer continues to increase as long as the waste is not disturbed or agitated. However, once sufficient trapped flammable vapor is present in the solids layer to result in CLFL in the vapor space if released, any disturbance or agitation of the waste results in flammable conditions in the vapor space. Even with the normal ADS purge and PVVS operating, the assumed

instantaneous release of a large volume of flammable vapor could result in exceeding CLFL in the vapor space for at least some short period of time. The trapped flammable vapor can be released from the waste, due to planned agitation using the APAs or eductors or due to an event that disturbs the waste directly such as a seismic event. Once flammable conditions are achieved in the process vessel vapor space, an ignition source, such as a spark due to a static discharge, is assumed to occur. Ignition of the flammable vapors in the process vessel vapor space results in an explosion. The explosion generates entrainment forces that aerosolize a portion of the liquid waste surface. The aerosolized waste is then released from the process vessel, resulting in potentially significant consequences to the Onsite and Offsite receptors.

#### 3.4.2.2.2 Source Term Analysis

The source term analysis for ASP Process Vessel Explosion events is performed in stages. First, the time to reach CLFL for the vessel must be determined. If the time to reach CLFL exceeds 10 days, an explosion in the vessel is considered to not be credible and need not be considered further. If the time to reach CLFL for the vessel is less than 10 days, an explosion is considered to be credible and further analysis is required. The volume of flammable vapor (both $H_2$ gas and flammable VOCs) in the vessel vapor space and the vessel temperature at 10 days is determined. The flammable gas is then assumed to detonate, resulting in aerosolization of the liquid in the process vessel. The analysis utilizes the "TNT Equivalent Method", as defined in DOE-HDBK-3010-94, Change Notice 1[5]. In this method, the ST mass is taken to be equal to the mass of TNT that would give the same total energy release as that released by the flammable vapors combusted with the air in the process vessel. The volume of liquid that is aerosolized by the detonation of the flammable gas in the vapor space is the source term. The methodology used to determine the time to reach CLFL and the volume of material aerosolized by a detonation is summarized above in Section 3.4.1.1.

The time required for the ASP process vessels' vapor space to reach CLFL after a loss of all purge flow through the vapor space has been determined in S-CLC-J-00033[40] and S-RPT-J-00011[57]. The analysis conservatively determined the minimum time to reach CLFL, while accounting for the worst-case radionuclide concentrations in the vessels, highly conservative CSSX solvent concentrations in all vessels, radioactive decay and external recirculation pump and APA heating (assumed to be adiabatic) of the waste liquid, and minimum vapor space volumes (volume above the overflow for each vessel). The analysis utilized measured $H_2$ and VOC generation rates from radiolytic decomposition testing of the CSSX solvent and $H_2$ generation rates for radiolytic decomposition of the water in the waste, based on measured Tank Farm rates. The time to reach CLFL in the SSFT (TK-109) considers the case of a normal amount of CSSX solvent present in the vessel, as well as the case in which 500 gallons of solvent is present in the vessel due to the process interlock that diverts the outlet flow from BDT (TK-206) to SSFT (TK-109).

For the ASP process vessels, the analysis determined that the minimum time to reach CLFL in the AST-A (TK-101) is longer than 10 days for all cases analyzed. The minimum time to reach CLFL conditions in the vapor spaces of the FFT-A (TK-102), SSRT (TK-104), SSFT (TK-109), WWHT (TK-105), SAST (TK-127), ASDT (TK-601), Lab Drain Tank (TK-235), and CSDT-A

(TK-103) was determined to be less than 10 days for the most severe radionuclide concentrations in the vessels without vessel cooling. Additionally, for the case of the diversion of 500 gallons of CSSX solvent to the SSFT (TK-109) or Lab Drain Tank (TK-235) along with a high radionuclide loading, the time to reach CLFL in the SSFT (TK-109) and Lab Drain Tank (TK-235) is also less than 10 days. The minimum of 10 days to CLFL is sufficient to permit actions to prevent a deflagration or detonation by restoration of normal PVVS or normal ADS purge operation, air sparging the APAs using a portable compressor, installation of temporary blowers to the PVVS header, or installation of temporary air compressors to provide air flow to the ADS. Therefore, it is not assumed to be credible that an explosion occurs in the AST-A (TK-101). Explosions are assumed to be credible in FFT-A (TK-102), SSRT (TK-104), SSFT (TK-109), WWHT (TK-105), SAST (TK-127), ASDT (TK-601), Lab Drain Tank (TK-235), and CSDT-A (TK-103).

The potential unmitigated radiological STs and consequences to both the Onsite receptor located at 100 meters from the release point (Onsite-2) and Offsite receptors of an explosion occurring in credible ASP process vessels (FFT-A [TK-102], SSRT [TK-104], SSFT [TK-109], WWHT [TK-105], SAST [TK-127], ASDT [TK-601], Lab Drain Tank [TK-235], and CSDT-A [TK-103]) has been analyzed (S-CLC-J-00054, *Accident Analysis of Explosion Events*[61]). The volume of the flammable vapors, including $H_2$, solvent, and VOCs in the process vapor spaces, is determined in calculation S-CLC-J-00033[40] for use in the ST and consequence analysis. These values are then used in S-CLC-J-00054[61] with the "TNT Equivalent Method" to conservatively estimate the STs from explosions in the vapor space in the FFT-A (TK-102), SSRT (TK-104), SSFT (TK-109), WWHT (TK-105), SAST (TK-127), ASDT (TK-601), Lab Drain Tank (TK-235), and CSDT-A (TK-103). The analysis uses the flammable vapor volumes that are present in the vessel at 10 days following a loss of all purge of the vapor space. The analysis also considers adiabatic heat-up of the vessels, due to radioactive decay and continued external recirculation pump and APA operation for 12 hours. The radiological STs are then used to determine the consequences to the Onsite-2 and Offsite receptors.

#### 3.4.2.2.3 Consequence Analysis

The potential unmitigated radiological consequences to both the Offsite and Onsite-2 receptors for ASP Process Vessel Explosion events have been analyzed (S-CLC-J-00054[61]). The analysis documented in S-CLC-J-00054[61] demonstrated that the maximum radiological consequences to the Offsite receptor from an explosion in the FFT-A (TK-102), SSRT (TK-104), SSFT (TK-109), WWHT (TK-105), SAST (TK-127), ASDT (TK-601), Lab Drain Tank (TK-235), or CSDT-A (TK-103) are 6.4 rem. Additionally, the analysis determined that the maximum unmitigated radiological consequences to the Onsite-2 receptor are greater than 100 rem. The maximum consequences result from an explosion in the FFT-A (TK-102).

#### 3.4.2.2.4 Comparison to the Evaluation Guideline

Based on the consequences discussed in the previous section, SC controls are not required to either prevent or mitigate an explosion occurring in the FFT-A (TK-102), SSRT (TK-104), SSFT (TK-109), WWHT (TK-105), SAST (TK-127), ASDT (TK-601), Lab Drain Tank (TK-235), or

CSDT-A (TK-103) to protect the health and safety of the Offsite receptor. This conclusion is based on the degree of conservatism in the ASP Process Vessel Explosion consequence analysis. The factors that add conservatism to the calculation of consequences for ASP Process Vessel Explosions include the assumptions used to generate the radionuclide concentrations in the waste streams in the ASP Process Vessels, the volume of CSSX solvent assumed to be present in all of the ASP Process Vessels, the assumption of adiabatic heatup of the ASP Process Vessels, the assumptions regarding the temperature-related solvent-vapor concentration, and the assumption that all explosions in the ASP Process Vessels are detonation events though the configuration of the Process Vessel vapor spaces makes a deflagration-to-detonation transition highly unlikely. Because of these highly conservative assumptions utilized in the analysis of the consequences of an ASP Process Vessel Explosion, an actual event will not result in consequences that exceed the EG for the Offsite receptor. Therefore, the EG is not challenged by the conservatively calculated consequences and SC controls are not required.

Based on the consequences discussed in the previous section, SS controls are required to either prevent or mitigate an explosion occurring in the FFT-A (TK-102), SSRT (TK-104), SSFT (TK-109), WWHT (TK-105), SAST (TK-127), ASDT (TK-601), Lab Drain Tank (TK-235),or CSDT-A (TK-103) to protect the health and safety of the Onsite-2 receptor.

The consequences to the immediate worker (Onsite-1) are not evaluated explicitly in S-CLC-J-00054[61]. However, if an unmitigated explosion did occur in the FFT-A (TK-102), SSRT (TK-104), SSFT (TK-109), WWHT (TK-105), SAST (TK-127), ASDT (TK-601), Lab Drain Tank (TK-235), or CSDT-A (TK-103), consequences to the facility worker (Onsite-1) could be significant. The event poses significant risk to the worker, due to the radiological material involved in the event. Based on these considerations, SS controls are required to either prevent or mitigate an explosion occurring in the FFT-A (TK-102), SSRT (TK-104), SSFT (TK-109), WWHT (TK-105), SAST (TK-127), ASDT (TK-601), Lab Drain Tank (TK-235), or CSDT-A (TK-103) to protect the health and safety of the Onsite-1 receptor.

#### 3.4.2.2.5 Summary of Safety-Class and Safety Significant SSCs, SACs, and TSR Controls

Because the unmitigated consequences to the Offsite receptor of an ASP process vessel explosion are well below the EG, no SC controls are required. However, because the unmitigated consequences to the Onsite-1 receptor were deemed to be significant and challenge the TOCs and the consequences to the Onsite-2 receptor were determined to exceed the TOCs, SS controls were selected to reduce the risk to the facility and co-located worker. The controls were selected to prevent the occurrence of an explosion in the ASP process vessels.

The safety strategy for explosion events in ASP process vessels relies on prevention. The consequences of explosions occurring in ASP process vessels are prevented through a combination of personnel prohibition from the Process Vessel Cells, mixing and agitation of the waste, air purge of the vessel vapor space, and temperature control by stopping external recirculation pumps for FFT-A (TK-102) and SSRT (TK-104) on high vessel temperature.

An explosion occurring in an ASP process vessel is judged to cause fatal or life-threatening injuries to any personnel present in the Process Vessel Cell where the vessel is located at the time the explosion occurs. Therefore, a primary preventive feature to prevent fatal or life-threatening injury to the facility worker from an explosion occurring in a Process Vessel Cell is to design the Process Vessel Cells to be unoccupied for the life of the facility and to prohibit access to the Process Vessel Cells following initial commencement of radioactive operations.

During normal operation, the vapor space of the ASP process vessels is purged of flammable vapors by the supply of purge air from the normal ADS to the vessel vapor space. The vessel space air is then exhausted by the PVVS, carrying away flammable vapors that have evolved from the waste in the vessel. Note that, even if the PVVS fans are not operating, the ADS purge flow still exits the vessel through the PVVS lines, and HEPA filters to the atmosphere as long as the flow path is open. The normal ADS and PVVS are highly reliable systems and additional confidence that the systems operate and prevent an explosion is provided by redundant components in the system (e.g., two fans, and three air compressors, normal and standby power).

In the event of loss of the normal ADS purge and PVVS, the FFT-A (TK-102), SSRT (TK-104), SSFT (TK-109), WWHT (TK-105), SAST (TK-127), ASDT (TK-601), Lab Drain Tank (TK-235) and CSDT-A (TK-103) (all with high radionuclide loadings due to mis-directed flow, incorrect operation, or equipment failure) do not have sufficient volume in the vapor space above the overflow line to prevent reaching CLFL conditions for at least 10 days. To prevent an explosion in these process vessels within 10 days after loss of normal air purge, the vessels are supplied with an SS back-up air purge through the ADS, provided by a stored air supply. The stored air supply is sufficient to provide adequate air flow to the vessels to prevent reaching CLFL for four days. Additionally, the PVVS flow path from the vessels, through the ductwork and HEPA filters to the plant stack and atmosphere, is also designated as SS to ensure a highly reliable purge discharge path. It was judged that four days was sufficient time such that at least one of the following actions is successfully performed to prevent reaching CLFL in the vessels: 1) restoration of normal PVVS operation; 2) restoration of normal ADS air purge operation; 3) air sparging through the APAs, using a portable air compressor; 4) installation of temporary blowers to the PVVS header; 5) installation of temporary air compressors to provide air flow to the ADS; or 6) replenishment of the stored air supply. An SS alarm is provided to ensure that a four day supply of air is available to provide ADS flow.

In the event of loss of the normal ADS and PVVS, the AST-A (TK-101) (even with maximum radionuclide concentration and solvent volume due to mis-directed flow, incorrect operation, or equipment failure) has sufficient volume in the vapor space above the overflow line to prevent reaching CLFL conditions for at least 10 days after loss of all air purge capability, provided the external recirculation pumps and APAs are tripped within 12 hours. The time to reach CLFL in the AST-A (TK-101) is based on the initial flammable gas concentration in the vessel vapor spaced being less than 25% of CLFL. This requirement is maintained by operation of the PVVS. Therefore, the loss of the PVVS is alarmed in the CR (SS alarm) to alert Operators to the failure of the PVVS. It was judged that 10 days was sufficient time such that at least one of the following actions is successfully performed to prevent reaching CLFL in the vessels: 1) restoration of normal PVVS operation; 2) restoration of normal ADS air purge operation; 3) air

sparging through the APAs, using a portable air compressor; 4) installation of temporary blowers to the PVVS header; or 5) installation of temporary air compressors to provide air flow to the ADS.

However, if flammable conditions are reached in the process vessel, potential ignition sources are prevented from entering or being created in the cell by the Ignition Source Control Program. In addition, the process vessels are grounded per NFPA 30[54] to reduce the potential for a spark from a static discharge. This limits the probability of an explosion occurring in a Process Vessel Cell, even if flammable vapor conditions are reached.

If a high concentration of solids is present in the AST-A (TK-101), FFT-A (TK-102), SSRT (TK-104), and SSFT (TK-109), and the waste in the vessels is not agitated for a significant period of time prior to the loss of the normal ADS purge and PVVS, sufficient flammable vapor could be trapped in the solids layer to result in exceeding CLFL within 10 days of loss of purge, if the waste is agitated or disturbed (i.e., seismic event) during this time period. Depending on the amount of vapor that can be trapped in the solids layer, a sudden release of the trapped gas could overwhelm the normal ADS purge and PVVS and result in reaching CLFL, even with these systems operating normally. The vessels are agitated any time sufficient liquid is present for the APAs to operate. This routine agitation prevents the accumulation of significant quantities of trapped flammable vapors. The long time to accumulate sufficient trapped flammable gas such that, if released, CLFL would be reached in the vessels (greater than 10 days) allows the use of a credited Administrative Control (i.e., Tank Agitation Program) to protect an initial condition assumed in the analysis, in lieu of a credited active engineered feature to prevent a trapped gas release that results in exceeding CLFL.

If a high concentration of solids is present in the WWHT (TK-105), SAST (TK-127), ASDT (TK-601), Lab Drain Tank (TK-235), or CSDT-A (TK-103), and the waste in the vessels is not agitated for a significant period of time, either prior to or after the loss of the normal ADS purge and PVVS, sufficient flammable vapor could be trapped in the solids layer to result in exceeding CLFL, if the waste is agitated or disturbed (i.e., seismic event). Depending on the amount of vapor that can be trapped in the solids layer, a sudden release of the trapped gas could overwhelm the normal ADS purge and PVVS and result in reaching CLFL, even with these systems operating normally. To prevent this during normal operation, continuous agitation of the vessels is performed, using the installed APAs (in WWHT [TK-105]) or mixing eductors (in SAST [TK-127] and ASDT [TK-601]) to prevent the accumulation of significant quantities of trapped flammable vapors. After loss of normal ADS and PVVS, the build-up of trapped flammable vapors and subsequent rapid release could overwhelm the SS back-up ADS purge flow, resulting in reaching CLFL conditions. However, in this event, the back-up ADS purge flow would soon reduce the flammable vapor concentrations to below CLFL, minimizing the risk of an explosion by limiting the time that the process vessel vapor space is above CLFL.

The ASDT (TK-601) and SAST (TK-127) are subject to a flammability control program that ensures that the contents of the vessels do not exceed parameters that would result in the waste in

the vessels having the potential to trap an amount of $H_2$ within 10 days that if released would result in the vessel vapor space exceeding CLFL.

The AST-A (TK-101), FFT-A (TK-102), and SSRT (TK-104) normally contain high concentrations of radionuclides and solids. Therefore, the radionuclide and solids concentrations in these tanks used to determine the time to reach CLFL are based on the SB concentrations (i.e., 18 wt% concentrated solids), as described in Section 3.4.1.1.1. The use of these conservatively bounding concentrations precludes the need for imposing further controls on the process to limit the radionuclide and solids concentrations that may be present in these process vessels.

According to the flow sheets, the ASDT (TK-601), CSDT-A (TK-103), Lab Drain Tank (TK-235), and SAST (TK-127) do not normally contain high concentrations of radionuclides. Because the SB takes no explicit credit for a DCS, an SB concentration of 18 wt% solids is assumed to be transferred within the ASP loop. For non-NPH operational considerations, this is the inventory assumed to be in these vessels and conservatively establishes the conditions for the dilution air flow to these vessels, the time to CLFL, and the explosion consequences. The use of this conservatively bounding concentration precludes the need for imposing controls on the process to limit the radionuclide and solids concentrations that may be present in these process vessels.

The WWHT (TK-105) does not normally contain high concentrations of radionuclides or solids. However, a filter breakthrough event during washing of the contents of SSRT (TK-104) could result in SSRT (TK-104) contents being transferred to WWHT (TK-105) and the remainder of WWHT (TK-105) volume to the overflow filled with wash water. This is the inventory that is assumed to apply to the WWHT (TK-105) and is used to conservatively establish conditions for the minimum air purge flow rate to WWHT (TK-105), time to CLFL, and explosion consequences. The use of this conservatively bounding concentration precludes the need for imposing controls on the process to limit the radionuclide and solids concentration in the WWHT (TK-105). However, the washing filter has been designated as an SS item to prevent high concentrations of radionuclides or solids from reaching the WWHT (TK-105).

The SSFT (TK-109) does not normally contain high concentrations of solids. However, incorrect operation (missed MST strike in the AST-A [TK-101]) or filter failure could result in significant solids concentration in the SSFT (TK-109) (from AST-A [TK-101] or FFT-A [TK-102]). For this analysis, it is assumed that the inventory in the SSFT (TK-109) is equivalent to the AST-A (TK-101) inventory with a missed MST strike. This inventory is used to conservatively establish conditions for the minimum air purge flow rate to the SSFT (TK-109), time to CLFL, and the explosion consequences. The use of this conservatively bounding concentration minimizes the need for imposing controls on the process to limit the radionuclide and solids concentration in the SSFT (TK-109). However, the CFF has been designated as an SS item to prevent high concentrations of solids from reaching the SSFT (TK-109) due to filter breakthrough.

The temperature of liquid in the process vessels has a significant impact on the flammable gas generation rate and the time to reach CLFL. Higher temperatures increase the flammable gas generation rates and decrease the time until CLFL is reached. There are two primary sources of

heating for the ASP process vessels. The radionuclides in the waste in the process vessels generate heat by radioactive decay. For all of the ASP process vessels, external recirculation pumps may also add heat to the liquid in the process vessels; however, only FFT-A (TK-102) and SSRT (TK-104) have times to CLFL reduced below 10 days, due to the impact of pump operation. During normal operating conditions, the excess heat is removed from the process vessels by the vessel cooling system to maintain the temperatures in the proper range for process conditions. However, the vessel cooling may be lost, resulting in increasing temperatures. To minimize the temperature increase in FFT-A (TK-102) and SSRT (TK-104), the filter recirculation pumps are automatically tripped on high temperature in the process vessel. This maximizes the time to reach CLFL in the event of loss of purge for these vessels. The temperature trip setpoint has been chosen such that the recirculation pumps on FFT-A (TK-102) and SSRT (TK-104) trip early enough to prevent reaching CLFL in the vessel within 10 days. Additionally, once the high temperature setpoint in the FFT-A (TK-102) or SSRT (TK-104) is reached, the operators are directed to manually trip the other recirculation pumps associated with the impacted tank to limit the continued heat addition from any other operating recirculation pumps.

The controls in the following lists summarize the controls and their safety functions credited for this DBA and as discussed in detail in the previous text in this section. The controls in the following lists are identified as either a preventive control (P) or as a mitigative control (M). Each control includes a control identifier number to allow cross referencing to the controls developed from the HA and other DBAs. The preventive and mitigative controls that constitute the 1$^{st}$ LOC are identified appropriately (i.e., 1$^{st}$ LOC). The 1$^{st}$ LOCs are defined as the group of controls that taken together are the minimum set of controls that provide adequate protection of the health and safety of the offsite and onsite receptors from the postulated consequences of the identified DBA. Other preventive and mitigative controls identified in the following list provide additional assurance of protection of the health and safety of the offsite and onsite receptors beyond that provided by the 1$^{st}$ LOCs alone and provide defense-in-depth. Administrative controls that are included in the 1$^{st}$ LOC are required to be SACs. All SS controls developed in the AA are listed in Table 3.7-22.

In addition to the preventive SS controls, some ICs that are important to maintain the validity of the analysis were also designated SS. These SS ICs for the ASP Process Vessel Explosion event are:

- IC-12: PVVS Low-Vacuum Alarm (indicates low flow and provided to ensure the initial concentration of flammable gas in vessel vapor spaces is less than 25% of CLFL);
- IC-5: CFFs (prevent passing of high solids concentrations to downstream vessels);
- IC-14: Tank Agitation Program (addresses buildup of trapped flammable vapor in the SSFT [TK-109], AST-A [TK-101], FFT-A [TK-102], ASDT [TK-601], SAST [TK-127], WWHT [TK-105], and SSRT [TK-104]);
- IC-1: Access Controls (Personnel entry into the Process Vessel Cells is prohibited following initial commencement of radioactive operations.); and

- IC-13: ADS Low Pressure Alarms (monitor the Back-up Air Receivers pressure to ensure four days of air supply to ADS).

The following controls are credited with preventing ASP Process Vessel Explosion events:

- (P) EC-1 and EC-2: ADS and Backup Air Receiver (with connection point for the portable air supply); 1st LOC
- (P) EC-11.c: FFT-A and SSRT Tank Temperature Interlocks to Filter Recirculation Pumps (FFT-A [TK-102] and SSRT [TK-104]); 1st LOC
- (P) EC-7: Grounding per NFPA 30[54] (Vessels in the Process Vessel Cells grounded to reduce potential for a spark from a static discharge;
- (P) AC-7: Ignition Source Control Program;
- (P) AC-8: Flammability control program for the ASDT (TK-601) and SAST (TK-127); and
- (P) AC-11: High Temperature in the FFT-A (TK-102) or SSRT (TK-104). 1st LOC

After the application of the 1st LOC controls listed above, the occurrence of the ASP Process Vessel Explosion event is prevented and, therefore, there are no mitigated consequences to Offsite, Onsite-1, and Onsite-2 receptors. This reduction in the frequency of the ASP Process Vessel Explosion event is due to the fact that the controls that are designated as the 1st LOC are preventive and prevent the ASP Process Vessel Explosion event from occurring in the first place. A prerequisite for an ASP Process Vessel Explosion event is the accumulation of flammable vapor in the vapor space of an ASP Process Vessel to greater than CLFL concentrations. Taken together, the 1st LOCs as identified above prevent this from occurring for all ASP Process Vessels for all possible combinations of waste material composition in the vessels and, therefore, prevent the ASP Process Vessel Explosion event from occurring.

#### 3.4.2.3 AFF Process Vessel Explosion

The HA identified explosion events occurring in AFF Process Vessels with unmitigated consequences that potentially exceed the TOC for both the facility worker (Onsite-1 receptor) and the co-located worker (Onsite-2 receptor), but do not challenge the EG for the Offsite receptor. These explosion events all involve potential explosions occurring inside the vapor space of a process vessel. The SWPF process vessels contain the radioactive waste during processing. Because the generation of flammable vapors in the process vessel vapor space is the product of radiolysis of the water and solvent and the vapor pressure of the solvent that may be present in the waste stream, and the process vessels contain the majority of the waste at any given moment, the process vessels are the locations in which flammable vapor generation is most likely to occur and result in the highest risk of reaching flammable conditions. Additionally, the process vessels contain the majority of the waste, which is the primary source of radiological risk to receptors. Therefore, an explosion in a process vessel presents the highest risk to the Onsite receptors of any of the explosions. This event is discussed in this subchapter.

#### 3.4.2.3.1 Scenario Description

The HA identified an explosion in an AFF Process Vessel as an event that meets the requirements to be considered a DBA. An AFF Process Vessel Explosion event can involve either a mixed vessel with no solids layer or an unmixed vessel with the potential to trap flammable $H_2$ gas in the solids layer. In mixed vessels and vessels without significant solids, flammable vapor is generated continuously from radiolysis of water and solvent in the waste and is released to the process vessel vapor space after exceeding the solubility in the liquid waste (no delay is assumed between the flammable vapor generation and the release to the vapor space). Any organic compounds present in the waste (e.g., present in feed from Tank Farm, carryover from CSSX process) can evolve additional flammable vapors to the process vessel vapor spaces. Flammable vapor in the vessel vapor space is assumed to flammable conditions and explodes and releases radioactive material or physically harms workers. An ignition source is assumed to be present in the vessels. For unmixed process vessels with high solids concentration, agitation of the solids in a process vessel causes a rapid release of the trapped flammable vapors (assumed to be instantaneous). The flammable vapor concentration in the vessel vapor space exceeds the CLFL, explodes, and releases radioactive material. The HA qualitatively assigned a frequency of Extremely Unlikely (EU) for all explosion events at SWPF. This assignment was based on the assumption that initiation of an explosion is assumed to occur if the proper conditions are present even though no specific source of ignition was identified. This frequency assignment reflects the fact that explosions are more difficult to initiate than fires. The potential development of the conditions for an explosion in the AFF Process Vessels are discussed in the following.

The decay of radioactive atoms in the liquid waste causes disassociation of water molecules (radiolysis), which generates flammable $H_2$ vapor. In addition, radiolysis of the organic solvent used in the SWPF may also occur. The radiolytic decomposition of the CSSX solvent generates not only $H_2$, but also generates flammable VOCs such as methane, carbon monoxide, ethane, propane, butane, hexane, pentane, propene, isobutane, methylpropane, methylbutane, pentene, and tetrafluoropropane. The major component of the CSSX solvent, Isopar®L, is also flammable and will be present in the vapor space over any liquid containing the solvent in a concentration determined by the vapor pressure of the solvent. In a process vessel containing radioactive liquid waste, postulated explosion (deflagration or detonation) events result from the accumulation of flammable radiolytic $H_2$ vapor in the vapor space of the vessel. If CSSX solvent is also present in the waste, flammable VOCs and Isopar®L vapor also accumulates in the vapor space. For unmitigated risk determination, an ignition source is assumed present to initiate a deflagration or detonation.

To support an explosion, the flammable vapor concentration must increase to at least the CLFL of the vapor mixture. This is the concentration of a given mixture of flammable vapors that supports propagation of a flame front throughout the vapor space. Note that, for a mixture containing both $H_2$ and flammable VOCs, either a deflagration or a detonation may occur if the CLFL is exceeded. Explosion events are only assumed to occur in process vessels where the time to reach CLFL in the vapor space is less than 10 days. It is assumed that within 10 days, a means to prevent the deflagration/detonation will be made available.

The explosion could take the form of either a deflagration or detonation, depending on the physical arrangement of the area in which the explosion occurs. A deflagration is by definition an explosion in which the flame front travels at subsonic speeds. A detonation is an explosion in which the flame front travels at supersonic speeds. Because the sonic barrier is exceeded in a detonation, a shock wave is generated that results in much higher pressures than for a deflagration.

The explosion generates significant aerodynamic entrainment forces and, for detonation, shock waves that act on the surface of the process vessel liquid. The entrainment forces and shock wave result in the generation of significant quantities of aerosols. The aerosols may provide a significant hazard to the Onsite and Offsite receptors.

During normal operations, flammable vapor build-up to CLFL concentrations in the vapor spaces of the AFF process vessels is prevented by the normal AFF Vessel Vent Header. For any of the process vessels, if the purge of the vessel vapor space stops, the flammable vapor concentration in the vapor space begins to increase until CLFL is reached. At that point, an explosion is possible if an ignition source is present. The time required for the process vessel vapor space to reach flammable conditions depends on the flammable vapor generation rate of the waste and the temperature of the waste. This, in turn, depends on the concentration of radionuclides present in the waste and any external heat sources to the waste, such as recirculating pumps. Higher concentrations of radionuclides and higher temperatures in the waste result in higher flammable vapor generation rates and shorter times before CLFL is reached in the vessel vapor space.

Various conditions and mechanisms are associated with the accumulation of flammable vapors in a process vessel vapor space that may result in an explosion. In waste containing low concentrations of solids, the flammable vapor dissolves in the liquid at a concentration dependent on the solubility in the waste. Once the maximum dissolved flammable vapor concentration in the waste is reached, equilibrium concentrations between the flammable vapor in the liquid and in the vessel vapor space that is dependent on the pressure and temperature of the vessel, the flammable vapor generation rates, and the ventilation purge flow rate is established. If ventilation purge flow is interrupted, the flammable vapor begins to accumulate in the vessel vapor space.

In waste containing high concentrations of solids (i.e., MST/sludge slurry), the formation of a layer of concentrated solids in the bottom of the vessel results in the possibility of generating pockets of trapped flammable vapor in the solids layer. Bubbles or voids of flammable vapor (trapped gas) may form in the solids layer, in addition to the flammable vapor that is dissolved in the waste. Mixing of the solids releases the trapped flammable vapor bubbles to the vessel vapor space. The sudden release of flammable vapor can result in exceeding the CLFL in the process vessel vapor space even with normal purge systems operating. To prevent this from occurring, the solids are agitated on a regular basis before sufficient trapped flammable vapor can build up in the solids layer to result in exceeding the CLFL, if released.

AFF process vessels that are susceptible to potential explosions include the AST-B (TK-221), FFT-B (TK-222), MSTT (TK-224), DSSHT (TK-207), AFDT (TK-228), CSDT-B (TK-223),

and IST (TK-220). The AFF process handles the waste with moderate solids concentrations and radionuclide concentrations. Therefore, AFF vessels are susceptible to explosions resulting from flammable vapor generated in and released directly from the waste and from trapped flammable vapor scenarios. Under normal conditions, significant solids concentrations are limited to the AST-B (TK-221), FFT-B (TK-222), and the MSTT (TK-224). However, due to the small concentration of MST in the AST-B (TK-221) and absence of entrained tank farm solids, trapped gas is not considered to be a credible scenario for the AST-B (TK-221). Solids may be present in the AFDT (TK-228) or CSDT-B (TK-223) due to misdirected flow from the FFT-B (TK-222) or MSTT (TK-224).

Because feed to the AFF has been contacted with CSSX solvent in the CSSX process, some solvent is expected to be carried over from the CSSX process to the AFF. Therefore, all AFF process vessels are assumed to contain CSSX solvent. The amount of solvent present in the vessels is generally relatively small.

The temperature of the process vessel and liquid also impacts the time to reach CLFL in the vessel. A higher temperature shortens the time to CLFL by decreasing the LFLs of the individual flammable gases, increasing the volumetric flammable gas generation rates, and increasing the Isopar®L vapor pressure. Heat is added to the process vessel by radioactive decay of the radionuclides in the waste and, for all of the AFF process vessels, from mechanical sources such as external pumps that recirculate the vessel liquid. During normal operations, the heat is removed from the process vessels by vessel cooling systems. However, if the vessel cooling is lost, heat-up of the process liquid would result. This potential for heat-up of the process vessel and liquid is accounted for in determining the time to reach CLFL and the consequences for an explosion in a process vessel. External recirculation pumps continue to operate for 12 hours after loss of vessel cooling.

If the solids concentration in an AFF vessel is not at a high enough concentration to form a solids layer that traps the flammable vapor, the flammable vapors are released to the vapor space at the rate they are generated in the vessel, once the flammable vapors in the liquid are at their saturation concentration. The flammable vapors in the process vessel vapor space are then removed from the vessel by air flow provided by the normal purge flow and the vessel level Plant Air bubblers and the AFF vessel ventilation exhaust to prevent build-up of the flammable vapors to the CLFL concentration. If the purge flow is lost due to system failure (LOP) a seismic event, or other means, the flammable vapor concentrations in the vessel vapor space begins to increase until CLFL is reached. If vessel cooling is lost, the process liquid in the vessel heats up, due to the addition of heat from radioactive decay and from external recirculation pumps if they continue to operate. The increase in temperature decreases the time to reach CLFL. Once flammable conditions are reached in the process vessel vapor space, an ignition source (such as a spark due to a static discharge) is assumed to occur. The ignition of the flammable vapors in the process vessel vapor space results in an explosion. The explosion generates entrainment forces that aerosolize a portion of the liquid waste surface. The aerosolized waste is then released from the process vessel, resulting in potential consequences to the Onsite and Offsite receptors.

If the solids concentration in an AFF process vessel is at a high enough concentration to form a solids layer (assuming the vessel liquid is not agitated) to trap flammable vapor bubbles, the flammable vapors continue to accumulate in the trapped layer, even after the vapors in the liquid reach their saturation concentration. It is possible that enough flammable vapors are trapped in the solids layer to form a flammable vapor mixture in the process vessel vapor space, if released to the vapor space at one time. The volume of flammable vapor that is trapped in the solids layer continues to increase as long as the waste is not disturbed or agitated. However, once sufficient trapped flammable vapor is present in the solids layer to result in CLFL in the vapor space, if released, any disturbance or agitation of the waste results in flammable conditions in the vapor space. Once flammable conditions are achieved in the process vessel vapor space, an ignition source (such as a spark due to a static discharge) is assumed to occur. Ignition of the flammable vapors in the process vessel vapor space results in an explosion. The explosion generates entrainment forces that aerosolize a portion of the liquid waste surface. The aerosolized waste is then released from the process vessel, resulting in potential consequences to the Onsite and Offsite receptors.

#### 3.4.2.3.2 Source Term Analysis

The source term analysis for AFF Process Vessel Explosion events is performed in stages. First, the time to reach CLFL for the vessel must be determined. If the time to reach CLFL exceeds 10 days, an explosion in the vessel is considered to not be credible and need not be considered further. If the time to reach CLFL for the vessel is less than 10 days, an explosion is considered to be credible and further analysis is required. The volume of flammable vapor (both $H_2$ gas and flammable VOCs) in the vessel vapor space and the vessel temperature at 10 days is determined. The flammable gas is then assumed to detonate, resulting in aerosolization of the liquid in the process vessel. The analysis utilizes the "TNT Equivalent Method", as defined in DOE-HDBK-3010-94, Change Notice 1[5]. In this method, the mass of liquid that is aerosolized is taken to be equal to the mass of TNT that would give the same total energy release as that released by the flammable vapors combusted with the air in the process vessel. The volume of liquid that is aerosolized by the detonation of the flammable gas in the vapor space is the source term. The methodology used to determine the time to reach CLFL and the volume of material aerosolized by a detonation is summarized above in Section 3.4.1.1.

The time required for the AFF process vessels' vapor space to reach CLFL after a loss of all purge flow through the vapor space has been determined in S-CLC-J-00033[40]. The analysis conservatively determined the minimum time to reach CLFL, while accounting for the worst-case radionuclide concentrations in the vessels, highly conservative CSSX solvent concentrations in all vessels, radioactive decay and external recirculation pump heating (assumed to be adiabatic) of the waste liquid, and minimum vapor space volumes (volume above the overflow for each vessel). The analysis utilized measured $H_2$ and VOC generation rates from radiolytic decomposition testing of the CSSX solvent and $H_2$ generation rates for radiolytic decomposition of the water in the waste based on measured SRS Tank Farm rates. The analysis also utilized measured CSSX solvent vapor pressure as a function of temperature (*Test Plan for the Determination of Isopar L Vapor Over CSSX Solvent and the Test Results*[53]).

For the FFT-B (TK-222) and AFDT (TK-228) with continued external recirculation pump operation for 12 hours the minimum time to reach CLFL conditions in the vapor spaces was determined to be less than 10 days for the most severe radionuclide concentrations in the vessels. Because the time to reach CLFL in the vessels is less than 10 days, explosions are assumed to be credible in the FFT-B (TK-222) and AFDT (TK-228). Time to reach CLFL for all other AFF process vessels was determined to be greater than 10 days for all cases and, therefore, explosions are not considered to be credible in the AST-B (TK-221), MSTT (TK-224), DSSHT (TK-207), IST (TK-220), and CSDT-B (TK-223).

The potential unmitigated radiological STs and consequences to both the Onsite receptor located at 100 meters from the release point (Onsite-2) and Offsite receptors of explosions occurring in the FFT-B (TK-222) and AFDT (TK-228) process vessels has been analyzed in S-CLC-J-00054[61]. The volume of flammable vapors including $H_2$, solvent, and VOCs in the process vapor spaces is determined in S-CLC-J-00033[40] for use in the ST and consequence analysis. These values are then used in S-CLC-J-00054[61] with the "TNT Equivalent Method" to conservatively estimate the STs from explosions in the vapor space in the FFT-B (TK-222) and AFDT (TK-228) process vessels. The analysis uses the flammable vapor volumes that are present in the vessel at 10 days following a loss of all purge of the vapor space. The analysis also considers adiabatic heat-up of the vessels due to radioactive decay and continued external recirculation pump operation for 12 hours, where applicable. The radiological STs are then used to determine consequences to the Onsite-2 and Offsite receptors.

#### 3.4.2.3.3 Consequence Analysis

The potential unmitigated radiological consequences to both the Offsite and Onsite-2 receptors for AFF Process Vessel Explosion events have been analyzed (S-CLC-J-00054[61]). The analysis documented in S-CLC-J-00054[61] demonstrated that the maximum radiological consequences from an explosion in an AFF process vessel occur in FFT-B (TK-222). The maximum radiological consequences to the Offsite receptor from an explosion in FFT-B (TK-222) are less than 2 rem. The analysis also determined that the maximum unmitigated radiological consequences to the Onsite-2 receptor are greater than 100 rem.

#### 3.4.2.3.4 Comparison to the Evaluation Guideline

Based on the consequences discussed in the previous section, SC controls are not required to either prevent or mitigate an explosion occurring in the FFT-B (TK-222) or AFDT (TK-228) to protect the health and safety of the Offsite receptor.

Based on the consequences discussed in the previous section, SS controls are required to either prevent or mitigate an explosion occurring in the FFT-B (TK-222) to protect the health and safety of the Onsite-2 receptor.

Consequences to the immediate worker (Onsite-1) were not evaluated explicitly in S-CLC-J-00054[61]. However, it is assumed that, if an unmitigated explosion did occur in FFT-B (TK-222) or AFDT (TK-228), consequences to the facility worker (Onsite-1) could be significant. The

event poses significant risk to the worker, due to the radiological material involved in the event. Based on these considerations, SS controls are required to either prevent or mitigate an explosion occurring in the FFT-B (TK-222) or AFDT (TK-228) to protect the health and safety of the Onsite-1 receptor.

#### 3.4.2.3.5 Summary of Safety-Class and Safety Significant SSCs, SACs, and TSR Controls

Because the unmitigated consequences to the Offsite receptor of an AFF Process Vessel Explosion are well below the EG, no SC controls are required. However, because the unmitigated consequences to the Onsite-1 receptor were deemed to be significant and challenge the TOCs and the consequences to the Onsite-2 receptor were determined to exceed the TOCs, SS controls were selected to reduce the risk to the facility and co-located worker. The controls were selected to prevent the occurrence or to mitigate the consequence of an explosion in the AFF process vessels.

The safety strategy for explosion events in AFF process vessels relies primarily on prevention. The consequences of explosions occurring in AFF process vessels are prevented through a combination of minimum available vessel vapor space, waste rheological properties (e.g., solids content, radionuclide inventory), waste volume, maximum decay heat load per unit mass, air purge of the vessel vapor space, and temperature control by stopping external recirculation pumping if vessel cooling is lost. Mitigation for explosion events in AFF process vessels is also provided by filtering any releases inside the AFF structure before they are released to the atmosphere.

During normal operation, the vapor space of the AFF process vessels is purged of flammable vapors by the supply of purge air from the normal compressed air system to the vessel vapor space. The vessel space air is then exhausted through the AFF Process Vessel Vent Header and to the atmosphere, carrying away the flammable vapors that have evolved from the waste in the vessel. The normal plant compressed air system is a highly reliable system, and additional confidence that the system operates and prevents an explosion is provided by redundant components in the system (e.g., three air compressors).

The AFF Ventilation Exhaust System provides a filtered relief path for any events occurring inside the AFF structure. Therefore, the system acts to reduce the consequences to the Onsite-2 receptor from the release of radioactive material in the AFF due to an AFF vessel explosion event. The AFF Ventilation Exhaust System also ventilates the AFF structure. Therefore, the ventilation function of the system also acts to reduce the consequences to the Onsite-1 receptor from the release of radioactive material into the AFF structure due to an AFF vessel explosion event.

In case of loss of the normal air purge, the FFT-B (TK-222) process vessel, with high radionuclide loadings due to misdirected flow, incorrect operation, or equipment failure, does not have sufficient volume in the vapor space above the overflow line to prevent reaching CLFL conditions for at least 10 days, if the external recirculation pumps continue to operate for 12 hours after process vessel cooling is lost.

The temperature of liquid in the process vessels has a significant impact on the flammable gas generation rate and the time to reach CLFL. Higher temperatures increase the flammable gas generation rates and decrease the time until CLFL is reached. There are two primary sources of heating for the FFT-B (TK-222) process vessel. Radionuclides in the waste in the process vessels generate heat by radioactive decay. External recirculation pumps also add significant heat to the liquid in the process vessels. During normal operating conditions, the excess heat is removed from the process vessels by the vessel cooling system to maintain the temperatures in the proper range for process conditions. FFT-B (TK-222) is provided with both water fed cooling coils on the vessel itself and with heat exchangers in the filter recirculation loops. However, the vessel cooling may be lost, resulting in increasing temperatures. To minimize temperature increase, the filter recirculation pumps for FFT-B (TK-222) are automatically tripped on high temperature in the recirculation loop. This maximizes the time to reach CLFL in case of loss of purge for FFT-B (TK-222). The temperature trip setpoint has been chosen such that the recirculation pumps on FFT-B (TK-222) trip early enough to prevent reaching CLFL in the vessel within 10 days.

In case of loss of the normal air purge, the AFDT (TK-228) process vessel, with high radionuclide loadings due to misdirected flow, incorrect operation, or equipment failure, does not have sufficient volume in the vapor space above the overflow line to prevent reaching CLFL conditions for at least 10 days. The primary contributor to the AFDT (TK-228) reaching flammable conditions in less than 10 days is the heat load attributable to the high solids concentration in the vessel from a misdirected flow event. To minimize the likelihood of such an event, the AFDT (TK-228) level is an AC to limit the volume of high solids concentration liquid drained to the ADFT (TK-228) to 200 gallons from the FFT-B (TK-222) when it contains solids from seven AST-B (TK-221) concentrated into a tank volume of 2,000 gallons or less and from MSTT (TK-224) whenever this tank contains concentrated solids. This minimizes the likelihood that the AFDT (TK-228) will reach flammable conditions by lowering the heat load in the vessel.

If a high concentration of solids is present in the FFT-B (TK-222) and MSTT (TK-224), and the waste in the vessels is not agitated for a significant period of time prior to the loss of the normal purge, sufficient flammable vapor could be trapped in the solids layer to result in exceeding CLFL within 10 days of loss of purge, if the waste is agitated or disturbed (i.e., seismic event) during this time period. Depending on the amount of vapor that can be trapped in the solids layer, a sudden release of the trapped gas could overwhelm the normal purge and result in reaching CLFL, even with this system operating normally. To prevent this, periodic agitation of the vessels is performed, using the installed agitators to prevent the accumulation of significant quantities of trapped flammable vapors. The long time to accumulate sufficient trapped flammable gas such that, if released, CLFL would be reached in the vessels (greater than 10 days) allows the use of a credited Administrative Control (i.e., Tank Agitation Program) in lieu of a credited active engineered feature to prevent a trapped gas release that results in exceeding the CLFL.

The FFT-B (TK-222) and AFDT (TK-228) do not normally contain high concentration of radionuclides and solids. However, upstream upsets such as filter breakthrough or misdirected transfers could result in the introduction of high concentrations of radionuclides (including $^{137}Cs$) to the process vessels in the AFF. This is the inventory that is assumed to apply to the FFT-B

(TK-222) and AFDT (TK-228) for determining the time reach CLFL and the consequences of a resulting explosion if the time to reach CLFL is less than 10 days. The use of this conservatively bounding concentration precludes the need for imposing controls on the process to limit the radionuclide and solids concentration in the FFT-B (TK-222) and AFDT (TK-228). However, the CFFs have been designated as SS items to prevent high concentrations of radionuclides or solids from reaching the AFF process vessels. Additionally, the turbidity detectors on the CSS stream from the ASP process are designated as SS to detect a potential filter breakthrough. Finally, the BDT gamma interlock ensures that only a $^{137}$Cs depleted stream reaches the AFF. These controls act together to prevent high concentration of radionuclides and solids in the FFT-B (TK-222) and AFDT (TK-228).

The FFT-B (TK-222) and MSTT (TK-224) do not normally contain large volumes of CSSX solvent in a floating layer. However, upstream upsets such as misdirected transfers during multi-strike operation could result in the introduction of excessive volumes of CSSX solvent to the FFT-B (TK-222) and MSTT (TK-224). To ensure that the volume of CSSX solvent that is present in the FFT-B (TK-222) and the MSTT (TK-224) is limited to volumes assumed in determining the time to reach CLFL and the consequences of a resulting explosion if the time to reach CLFL is less than 10 days, the Solvent Removal Program ensures that the volume of CSSX solvent in a floating layer within the FFT-B (TK-222) and MSTT (TK-224) remains within the values assumed in the accident analysis.

The controls in the following lists summarize the controls and their safety functions credited for this DBA and as discussed in detail in the previous text in this section. The controls in the following list are identified as either a preventive control (P) or as a mitigative control (M). Each control includes a control identifier number to allow cross referencing to the controls developed from the HA and other DBAs. The preventive and mitigative controls that constitute the 1$^{st}$ LOC are identified appropriately (i.e., 1$^{st}$ LOC). The 1$^{st}$ LOCs are defined as the group of controls that taken together are the minimum set of controls that provide adequate protection of the health and safety of the offsite and onsite receptors from the postulated consequences of the identified DBA. Other preventive and mitigative controls identified in the following list provide additional assurance of protection of the health and safety of the offsite and onsite receptors beyond that provided by the 1$^{st}$ LOCs alone and provide defense-in-depth. Administrative controls that are included in the 1$^{st}$ LOC are required to be SACs. All SS controls developed in the AA are listed in Table 3.7-22.

In addition to the mitigative or preventive SS controls, some ICs that are important to maintain the validity of the analysis are also designated SS. These SS ICs for the AFF vessel explosion with no trapped gas event are:

- IC-11: High Turbidity Interlock (provided for the CSS stream to detect filter breakthrough);
- IC-10: BDT Gamma Interlock (ensures that only a $^{137}$Cs depleted waste stream enters the AFF);
- IC-5: CFFs (prevent passing of high solids concentrations to downstream vessels); and

- IC-14: Tank Agitation Program (addresses buildup of trapped flammable vapor in the FFT-B [TK-222], and MSTT [TK-224]).

The following controls are credited with mitigating or preventing AFF Process Vessel Explosion events:

- (M) EC-8: AFF Ventilation Exhaust System;
- (P) EC-11.c: FFT-B Recirculation Loop Temperature Interlocks to Filter Recirculation Pumps; 1st LOC
- (P) AC-9: Draining Slurried Solids from FFT-B (TK-222)/MSTT (TK-224) to AFDT Program; 1st LOC and
- (P) AC-4: Solvent Removal Program.

After application of the 1st LOC controls listed above, the occurrence of the AFF Process Vessel Explosion event is prevented and, therefore, there are no mitigated consequences to the Offsite, Onsite-1, and Onsite-2 receptors. This reduction in the frequency of the AFF Process Vessel Explosion event is due to the fact that the controls that are designated as the 1st LOC are preventive and prevent the AFF Process Vessel Explosion event from occurring in the first place. A prerequisite for an AFF Process Vessel Explosion event is the accumulation of flammable vapor in the vapor space of an AFF Process Vessel to greater than CLFL concentrations. Taken together, the 1st LOCs as identified above prevent this from occurring for all AFF Process Vessels for all possible combinations of waste material composition in the vessels and, therefore, prevent the AFF Process Vessel Explosion event from occurring.

#### 3.4.2.4 ASP APA Air Jet Aerosolization

The HA identified several unmitigated aerosolization events that potentially exceed a TOC for the Onsite-2 receptor. The SWPF utilizes equipment to agitate and mix the liquid in the ASP Process Vessels, using high-velocity air jets as the means of operation. As a result of equipment malfunction or failure, high-pressure air impinging on the liquid surface generates aerosols. This potential accident scenario and the consequences are discussed in this subchapter.

##### 3.4.2.4.1 Scenario Development

The HA identified an ASP APA Air Jet Aerosolization event as an event that meets the requirements to be considered a DBA. The HA identified a number of potential initiators for an ASP APA Air Jet Aerosolization event including human errors and mechanical failures. Human errors were considered to include both errors caused by maintenance workers and errors caused by the CR Operators. The HA assigned an unmitigated frequency of Anticipated (A) to all events initiated by human errors. Mechanical failures include failures of vessels, piping, valves, pumps, ventilation systems and control systems. The HA assigned an unmitigated frequency of Unlikely (U) to all events initiated by mechanical/equipment failures. Because the HA assigned Anticipated (A) and Unlikely (U) frequencies to the ASP Air Jet Aerosolization events identified

in the analysis, the overall frequency of occurrence of the ASP APA Air Jet Aerosolization DBA is assigned a frequency of Anticipated (A).

The SWPF utilizes APAs to provide agitation and mixing of the liquid waste in several of the process vessels in the facility. The APA uses air pressure to generate a liquid pulse that is directed into the liquid waste to generate mixing. The APA operates by first drawing liquid from the vessel into a pulse pot, using a vacuum. Air pressure is then applied to the top of the liquid column to force the liquid out a nozzle located at the bottom of the pulse pot and into the liquid in the tank. The APA operates in a pulse mode, in that the inflow and outflow of liquid generates a short pulse of liquid flow. The design uses multiple APAs located equally around the tank periphery, with one located in the center of the tank to ensure adequate mixing of the tank contents. The multiple APAs operate sequentially.

The APAs are used in the AST-A (TK-101), FFT-A (TK-102), SSRT (TK-104), WWHT (TK-105), and SSFT (TK-109).

The use of pressurized air to generate the liquid pulse from the APAs results in the potential for events that could result in the direct interaction of a pressurized air jet with the surface of the liquid in the tanks. This generates the possibility of aerosol generation due to the interaction of the air jet and the liquid surface.

One potential accident scenario related to air jet aerosolization relates to the failure of the air lines providing pressurized air to the APAs. These lines enter the tank at the top in the vapor space and join the APA above the liquid surface. Therefore, a failure of the air line could result in the impingement of an air jet on the liquid surface.

A second potential accident scenario involves the misalignment of an APA, such that the lower discharge nozzle is above the liquid surface. In this scenario, the air pulse would leave the mixer and impact the liquid surface. However, the diameter of the APA is very large in relation to the air line feeding the APA (approximately 18 inches for the mixer and 2 inches for the air line). Therefore, the air leaving the air line and entering the mixer would undergo expansion and a large loss of pressure. Additionally, the diameter of the discharge nozzle is larger than the air supply line diameter. Therefore, the diameter of the air supply line is still the limiting factor affecting the velocity of the air. Because the aerosolization rate is a strong function of the velocity, this would result in much less aerosolization, if the air passes through the APA before impinging on the liquid. The APAs in a vessel also act sequentially, with only one discharging at a single time. Therefore, the bounding scenario is for the continuous air flow directly from the air line to impinge on the liquid. Once the air jet has generated the aerosols, the suspended droplets of radioactive liquid would be released by the ventilation systems, resulting in potentially significant consequences to both the Onsite and Offsite receptors.

Note that, if the mixer is misaligned such that the nozzle is not below the liquid surface, the potential also exists to generate a liquid jet when the liquid in the mixer is expelled by the air pulse. However, once the initial liquid is expelled, the mixer could not draw more liquid into the

discharge chamber because the nozzle is not below the liquid surface. Therefore, this scenario would result in a very limited liquid jet and the potential consequences are insignificant.

An air jet aerosolization scenario is most likely to be initiated by either a loss of control of the APAs which results in the continued feeding of air to the mixer until the air is discharged through the APA into the process vessel itself or a failure of the air supply line itself inside the process vessel. Loss of control of the APAs could result from a failure in the control system or a human error. In either case, a failure that results in the introduction of high-pressure air from the APA to the process vessel during the lifetime of the SWPF is not considered to be an unlikely event. Failure of the air line could result from erosion or corrosion or a physical defect in the line. Again, such an event is not considered to be an unlikely event during the lifetime of the SWPF. Therefore, the frequency of occurrence of an air jet aerosolization event is judged to have an anticipated frequency.

#### 3.4.2.4.2 Source Term Analysis

The potential unmitigated radiological consequences to both the Onsite-2 and Offsite receptors of an air jet aerosolization event occurring as the result of the mis-positioning or failure of an APA located in a process vessel has been analyzed (S-CLC-J-00027, *Pulse Jet Mixer Air Jet Aerosolization Event Accident Analysis*[62]). Because there are no directly applicable aerosol generation rates for air jet impingement available, a specific model was developed to determine the Airborne Release Rate (ARR) and RF for air jet impingement on the liquid waste. The methodology used in the analysis is summarized above in Section 3.4.1. Supplemental analysis was performed to document sensitivity studies that addressed the uncertainty associated with the lack of direct empirical correlation data for aerosol generation and droplet size distributions associated with downward facing air jet impingement on liquids (see 00-700-26814, *APA Overblow Supplemental Analysis*[63]). This supplemental analysis confirmed that unmitigated SWPF APA overblow scenarios do not result in consequences that would warrant SC controls.

The aerosolization process involved in air jet impingement on liquid can be thought of as an entrainment process. Liquid droplets are entrained in the air flow by the interaction of the air jet with the liquid surface. The interaction of the air jet with the liquid transfers kinetic energy from the air jet to the liquid. The kinetic energy transferred from the air jet to the liquid is utilized in the formation of droplets of the liquid. As the energy of small spherical droplets is equal to the surface energy, and the surface energy is the product of the surface area of the droplet and the surface tension of the liquid, the amount of kinetic energy transferred from the air jet to the liquid appears as an increase in the surface area of droplets. For a given droplet diameter, the increase in surface area can be used to determine the volume and mass of droplets generated. The mass of droplets of a given size generated per unit mass flow of the air is defined as the entrainment ratio. Therefore, the entrainment ratio is essentially the product of the ARR and RF for an air jet impingement scenario.

The entrainment ratio for the air jet is estimated by conservatively assuming that the air jet is as efficient in generating droplets as a plain circular orifice liquid jet atomizer. The efficiency of the atomizer is then used as the efficiency of the air jet in generating respirable droplets. This

efficiency is then multiplied by the amount of kinetic energy of the air jet that goes into forming droplets in the liquid. From this, the volume of respirable droplets formed by the air jet impingement on the liquid is estimated.

#### 3.4.2.4.3 Consequence Analysis

The potential unmitigated radiological consequences to both the Offsite and Onsite-2 receptors for ASP APA Air Jet Aerosolization events have been analyzed (S-CLC-J-00027[62]). The analysis documented in S-CLC-J-00027[62] demonstrated that the maximum unmitigated radiological consequences to the Offsite receptor for an air jet event lasting eight (8) hours are less than 1 rem. Additionally, the analysis demonstrated that the maximum unmitigated radiological consequences to the Onsite-2 receptor from an aerosolization event with a duration of 8 hours are greater than 100 rem.

#### 3.4.2.4.4 Comparison to the Evaluation Guidelines

Based on the radiological consequences discussed in the previous section, SC controls are not required to either prevent or mitigate an ASP APA Air Jet Aerosolization event occurring in AST-A (TK-101), FFT-A (TK-102), SSRT (TK-104), WWHT (TK-105), or SSFT (TK-109) to protect the health and safety of the Offsite receptor.

Based on the radiological consequences discussed in the previous section, SS controls are required to either prevent or mitigate an ASP APA Air Jet Aerosolization event occurring in AST-A (TK-101), FFT-A (TK-102), SSRT (TK-104), WWHT (TK-105), or SSFT (TK-109) to protect the health and safety of the Onsite-2 receptor.

The consequences to the immediate worker (Onsite-1) were not evaluated explicitly in S-CLC-J-00027[62]. However, the potential exists for an air jet aerosolization event to result in significant harm to a facility worker in close proximity to the location of the event. The event poses significant risk to the worker, due to the radiological material involved in the event. Based on this consideration, SS controls are required to either prevent or mitigate an air jet aerosolization event at SWPF to protect the health and safety of the Onsite-1 receptor.

#### 3.4.2.4.5 Summary of Safety-Class and Safety Significant SSCs, SACs, and TSR Controls

Because the unmitigated consequences to the Offsite receptor of an ASP APA Air Jet Aerosolization event are well below the EG, no SC controls are required. However, because the unmitigated consequences to the Onsite-1 receptor were deemed to be significant and challenge the TOCs and the unmitigated consequences to the Onsite-2 receptor were determined to exceed the TOCs, SS controls were selected to reduce the risk to the facility and co-located worker. The controls were selected to both prevent the occurrence and mitigate the consequences of an ASP APA Air Jet Aerosolization DBA.

An APA ASP Air Jet Aerosolization event is judged to cause significant consequences to any personnel who are present in the Process Vessel Cell at the time the event occurs. Therefore, a primary preventive feature to prevent fatal or life-threatening injury to the facility worker from

an air jet aerosolization event is to prohibit access to the Process Vessel Cells. The Process Vessel Cells are designed to be unoccupied for the life of the facility and entry to the cells is prohibited following initial commencement of radioactive operations. Additionally, the PBVS ventilates the Process Vessel Cells and removes radioactive material from the atmosphere and PVVS provides a filtered relief path from the vessels which also mitigate the potential exposure of workers by directing releases away from the workers and filtering the harmful radioactive material.

The consequences of an APA air jet aerosolization event are determined in part by the physical arrangement of the air supply to the APAs and the APAs themselves. Therefore, head losses in the air supply line, the minimum diameter of the air supply line, and the APA discharge nozzle diameter are designed to limit the velocity and mass flow rate of an air jet, which in turn limits the aerosolization rate and consequences generated by the event. The restrictive flow orifice located in FFT-A, SSRT, WWHT, and SSFT APA air supply lines also limits the velocity and mass flow rate of an air jet. The air supply piping located inside the process vessels and the APAs themselves are also designed to prevent failure such that an air jet would not impinge on the surface of the waste liquid, thereby preventing the event from occurring.

If an APA air jet aerosolization event does occur, the generation of aerosols in the vapor space of the process vessel would result in a decrease in the vacuum in the PVVS system header that draws air from the process vessel vapor space. This decrease in the vacuum in the PVVS header is an indicator that an APA air jet aerosolization event is occurring. An SS alarm is provided to alert the operators of the loss of PVVS header vacuum. Isolation of the APAs from the PAS once the low PVVS header vacuum alarm occurs will terminate the APA air jet aerosolization event and limit the consequences of the event.

The controls in the following lists summarize the controls and their safety functions credited for this DBA and as discussed in detail in the previous text in this section. The controls in the following list are identified as either a preventive control (P) or as a mitigative control (M). Each control includes a control identifier number to allow cross referencing to the controls developed from the HA and other DBAs. The preventive and mitigative controls that constitute the 1$^{st}$ LOC are identified appropriately (i.e., 1$^{st}$ LOC). The 1$^{st}$ LOCs are defined as the group of controls that taken together are the minimum set of controls that provide adequate protection of the health and safety of the offsite and onsite receptors from the postulated consequences of the identified DBA. Other preventive and mitigative controls identified in the following list provide additional assurance of protection of the health and safety of the offsite and onsite receptors beyond that provided by the 1$^{st}$ LOCs alone and provide defense-in-depth. Administrative controls that are included in the 1$^{st}$ LOC are required to be SACs. All SS controls developed in the AA are listed in Table 3.7-22.

In addition to the mitigative or preventive SS controls, some ICs that are important to maintain the validity of the analysis were also designated SS. These SS ICs for the APA air jet aerosolization event are:

- IC-5: CFFs (prevent passing of high solids concentrations to downstream vessels); and

- IC-1: Access Controls (Personnel entry into the Process Vessel Cells is prohibited following initial commencement of radioactive operations).

The following controls are credited with preventing or mitigating the consequences of an ASP APA Air Jet Aerosolization event:

- (M) EC-20: APA Air Supply Configuration including Piping Minimum Diameter and Nozzle (AST-A [TK-101], FFT-A [TK-102], SSRT [TK-104], WWHT [TK-105], and SSFT [TK-109]); 1st LOC
- (M) EC-8 and EC-16: PBVS (ventilates the Process Vessel Cells and removes radioactive material from atmosphere);
- (M) EC-8: PVVS (provide filtered relief path from AST-A [TK-101], FFT-A [TK-102], SSRT [TK-104], WWHT [TK-105], SSFT [TK-109]);
- (P) EC-21: APA In-vessel Air Supply Piping and the APAs (AST-A [TK-101], FFT-A [TK-102], SSRT [TK-104], WWHT [TK-105], and SSFT [TK-109]); 1st LOC
- (M) EC-10: Restrictive Flow Orifice in the FFT-A, SSRT, WWHT, and SSFT APA Air Supply Piping (restricts the mass flow rate of the high pressure air through the air supply lines and APAs into the process vessel); 1st LOC and
- (M) AC-5.b: Isolating the APAs from the Plant Air Supply. 1st LOC

After application of the 1st LOC controls listed above, the mitigated consequences of the ASP APA Air Jet Aerosolization event are judged to be negligible to the Offsite, Onsite-1, and Onsite-2 receptors. This conclusion is based on the fact that the 1st LOC controls as a set prevent the majority of causes of an APA Air Jet Aerosolization event and strongly mitigate the consequences of the APA Air Jet Aerosolization events that are not prevented. Control EC-21 prevents all APA Air Jet Aerosolization events caused by failure of the piping and APAs inside the process vessels. The only remaining cause of an APA Air Jet Aersolization event is loss of liquid level control resulting in uncovering of the APA exit and allowing an air jet from the APA nozzle to impact on the surface of the liquid. In the event this occurs, Controls EC-10 and EC-20 limit the consequences to the on-site receptors of such an event to less than the TOC. Additionally, the loss of vacuum in the PVVS header will alert the operators to the need to isolate the air supply to the APAs. This action will decrease the duration of the aerosolization event from the 8 hours assumed in the consequence analysis documented in S-CLC-J-00027[62] to minutes. This decrease in duration will greatly decrease the consequences of the event to all receptors. Therefore, taken together, the 1st LOCs as identified above result in a large reduction in the consequences to all receptors and provide adequate protection of the health and safety of the workers and the public.

#### 3.4.2.5 Seismic Event

The HA identified a seismic event at the SWPF that impacts the Process Building and AFF with unmitigated consequences that potentially exceed the TOC for both the facility worker (Onsite-1 receptor) and the co-located worker (Onsite-2 receptor), but do not challenge the EG for the Offsite receptor. A seismic event can cause significant damage to facility structures and equipment, and lead to various releases of chemicals and radioactive waste. A discussion of the unmitigated and mitigated accident progressions is provided below. Based on consequences of the events, PCs are determined. SSCs that are credited with maintaining their functions during and following a Design Basis Earthquake event are also determined. There are two separate structures of the SWPF considered during the earthquake event, the Process Building and the AFF.

##### 3.4.2.5.1 Scenario Description

The HA identified a seismic event impacting the Process Building and the AFF as an event that meets the requirements to be considered a DBA. The HA qualitatively assigned a frequency of Unlikely (U) for all NPH events at SWPF. A seismic event is a unique accident initiator because the seismic event impacts the entire facility at a single time. A seismic event has the potential to generate essentially any of the individual events identified in the HA at the same time. In general, all credible combinations of events for the Process Building and AFF that could be initiated by the seismic event were considered, and the combined events that resulted in the bounding radiological consequences were included in the unmitigated seismic event scenario. The individual events that were combined into the seismic event scenario are discussed in the following.

Spills from vessels, elevated spills from process piping, pressurized leaks, aerosolization events from tank mixing devices, vessel fires, process vessel explosions, and cell fires following a seismic event were all considered. Some of these events are mutually exclusive. For example, the solvent contained in a vessel can burn in the vessel, or be leaked into the surrounding cell or dike and burned there, but the same mass of solvent cannot burn in both locations. Less obviously, if an aqueous waste process vessel's contents are pumped out and spilled from elevated process piping, a significant amount of solvent remains in the vessel. Therefore, a subsequent dike/cell fire would involve much less than the full solvent inventory initially assumed in the vessel. This is because complete emptying of the vessel by a pump cannot occur in vessels which also prevents complete emptying of the vessel to the cell from the elevated spill. On the other hand, the bottom of the vessel could fail, spill the full contents of the vessel directly to the cell, and then have the full solvent inventory involved in a cell or dike fire.

In addition to some non-credible combinations of events for a single vessel, there are certain events involving vessels that limit the possible inventories of upstream or downstream process vessels, thereby limiting the potential releases that could concurrently happen from those vessels. For example, if the process is configured such that vessel A is only transferred to vessel B in a batch-wise process, it is not reasonable to assume that a transfer-related accident occurs involving the full contents of vessel A at the same time the full contents of vessel B spill to the

cell. If vessel B was not empty to the degree needed to receive the contents of vessel A, the transfer of vessel A would not commence.

The CPA process vessel radiological inventories assumed for the seismic event are documented in S-CLC-J-00084, *Radiological Consequences of a Seismic Event at SWPF*[64]. A receipt of waste from the Tank Farm is assumed to be in progress. AST-A (TK-101) is at minimal volume prior to start of the Tank Farm transfer. The FFT-A (TK-102), WWHT (TK-105), SAST (TK-127), ASDT (TK-601), and CSDT-A (TK-103) are filled to their overflows with waste. The SSFT (TK-109), SEHT (TK-205), and other CSSX vessels are also filled to their overflows with waste and the CSSX contactors contain normal amounts of waste. FFT-A (TK-102) contains the accumulated solids from processing 10 AST-A (TK-101) batches. The SSRT (TK-104) also contains the accumulated solids from processing 10 AST-A (TK-101) batches. The assumed solids concentration in the SSRT (TK-104) is approximately 18 wt%.

Misdirected transfers are assumed to not be caused by a seismic event and are not considered coincident with seismic events.

Based on the DFs assumed for the ASP and CSSX process, the assumed AFF MAR radionuclide inventory is much lower than that of the Process Building. The inventory assumptions are protected by the credited high-gamma detector and interlock downstream of BDT (TK-206), and the credited high-turbidity/opacity detector and interlock located downstream of the SSFT (TK-109). Additionally, the MST addition and resident time in AST-A (TK-101) reduces the loading of soluble actinides available for transfer to the AFF. Consequently, the radiological inventory available for release from AFF is lower than the radiological inventory of the CPA.

The AFF process vessel radiological inventories assumed for the seismic event are documented in S-CLC-J-00084[64]. The IST (TK-220), AST-B (TK-221), MSTT (TK-224), DSSHT (TK-207), and CSDT-B (TK-223) are assumed to be filled to their overflows with waste. FFT-B (TK-222) is assumed to contain the accumulated solids from processing 10 AST-B (TK-221) batches with CSS at 0.1 Ci/gal $^{137}$Cs used to fill the vessel to the overflow for the spill event. For the dike fire, FFT-B (TK-222) is assumed to contain the accumulated solids from processing seven AST-B (TK-221) batches, one of which had higher than normal actinides because of an assumed missed MST strike when the waste was processed in ASP. For the dike fire, FFT-B (TK-222) is evaluated with a low volume of highly concentrated solids, instead of filled to the overflow with a high volume of low concentrated solids, because the fire scenario that boils off some of the highly concentrated solids results in higher doses. It was judged overly conservative to assume that both FFT-B (TK-222) and the MSTT (TK-224) would contain highly concentrated solids at the time of the seismic event. In order for FFT-B (TK-222) and MSTT (TK-224) to simultaneously contain highly concentrated solids, the following sequence is required:

1. FFT-B (TK-222) is concentrated beyond nominal process limits and subsequently transferred to the MSTT (TK-224),
2. Ten additional batches of waste are processed in FFT-B (TK-222) (over the next seven days) and again concentrated beyond nominal process limits,

3. MSTT (TK-224) contents are held in the tank instead of transferring to the SSRT (TK-104), and
4. Misdirected transfers are assumed to not be caused by a seismic event and are not considered coincident with a seismic event.

The seismic event scenario is developed by considering the individual accidents identified in the HA. These individual events are combined in scenarios excluding only those combinations of events that do not make logical sense or are somehow precluded by the seismic event. No credit is taken for any seismic design provisions for any equipment or structures. Potential events that may result from the occurrence of a seismic event include leaks or spills, fires, explosions, and other aerosolization events.

For an unmitigated seismic event that results in leaks or spills of radioactive material, it is assumed that the vessels spill their contents into a cell, dike, or a P&VG. An earthquake is judged to have the potential to result in a fire in close proximity to waste in locations that could contain non-process-related combustibles and electrical equipment. Simultaneous vessel explosions are postulated following the seismic event for vessels with less than eight hours to reach CLFL after a loss of all vessel purge and heat removal. Vessel vapor space explosions for vessels with less than 10 days to reach CLFL are also evaluated individually to ensure that they do not represent a worst-case bounding dose for the seismic event including trapped gas.

Because there is no credit taken for the seismic design of the process vessels and piping, a seismic event could result in leaks or spills of the radioactive process liquid. Two types of leaks or spills may result from a seismic event. The seismic event could result in vessel rupture, with the entire vessel inventory spilling into the cell. Additionally, the seismic event could result in failure of the piping associated with the process vessel. At the same time, the seismic event could result in failure of the control circuits for pumps that remove the process liquid from the process vessel, resulting in continued operation of the pumps. This could result in the entire contents of a process vessel being spilled through an elevated leak location into a process cell or P&VG, the locations through which the piping is routed. Therefore, the seismic scenario includes the spill of the entire contents of all of the process vessels in the Process Building and AFF. Specifically, this includes spills of the entire contents of the AST-A (TK-101), FFT-A (TK-102), SSRT (TK-104), SSFT (TK-109), SAST (TK-127), WWHT (TK-105), CSDT-A (TK-103), ASDT (TK-601), Lab Drain Tank (TK-235), contactors, Solvent Strip Feed Tank (TK-217), BDT (TK-206), DSS Coalescer (TK-201), DSS Stilling Tank (TK-211), SEHT (TK-205), Strip Effluent Stilling Tank (TK-212), Strip Effluent Coalescer (TK-203), Strip Effluent Pump Tank (TK-215), Solvent Drain Tank (TK-208), SHT (TK-202), IST (TK-220), AST-B (TK-221), FFT-B (TK-222), DSSHT (TK-207), MSTT (TK-224), and CSDT-B (TK-223). In addition, it is assumed that a transfer from the Tank Farm to the SWPF is occurring at the time the seismic event occurs, resulting in the spill of the entire transfer volume (62,400 gallons) into the WTE of the SWPF.

All systems that supply air to the process vessels or remove flammable vapors from process vessels in the CPA and AFF are assumed to fail due to a seismic event. Only two vessels have a time to CLFL of less than eight hours (S-CLC-J-00033[40]), assuming external recirculation pumps are tripped two hours after the occurrence of the seismic event or are automatically tripped on

high vessel temperature (FFT-A [TK-102], SSRT [TK-104], and FFT-B [TK-222]). These vessels are the Strip Effluent Pump Tank (TK-215) and the Solvent Strip Feed Tank (TK-217). Flammable vapors are assumed to accumulate in these tanks for eight hours and then explode, due to an unspecified ignition source. These vessels are relatively small (a total vessel volume of approximately 64 gallons for each tank). The vessel explosion is assumed to cause failure of the vessel and a subsequent spill of the remaining vessel contents. The vessel explosion may possibly damage adjacent piping and equipment (which is already assumed to be failed by the seismic event), but the explosion is judged to not have the potential to cause structural failure of the robust reinforced concrete cell in which the vessel is located.

The explosion in the above vessels is assumed to result in a pressure wave impacting the PVVS HEPA filters through the ducting from the vessel to the filter housings and cause failure of the PVVS HEPA filters, releasing a fraction of the radioactive material previously accumulated on the filter media. Explosions do not occur within vapor spaces connected to the PMVS because the process vessels containing the APAs do not reach flammable conditions within eight hours (S-CLC-J-00033[40]) and the vapor spaces in the APAs themselves will not reach flammable concentrations within eight hours (S-CLC-J-00139, *Time to Reach CLFL in the APA Vapor Spaces in the SWPF Process Vessels*[65]). However, the PMVS HEPA enclosures are assumed to be crushed, due to the failure of unspecified adjacent equipment, releasing the PMVS HEPA contents.

Aerosolization of significant amounts of waste due to overblowing through the APAs for the ASP Process Vessels is not deemed credible, due to the required combination of concurrent conditions described below that must occur to achieve prolonged sparging following a seismic event:

- Electric power to the Plant Air compressors, APA controllers, and three-way valves must remain available; otherwise, the Plant Air source is lost and the APA controller and three-way valves isolate Plant Air to the pulse pots, due to their fail-safe design; and
- An assumed failure of air supply piping/pulse pot inside a non-leaking process vessel must be located within a limited height band around the current process vessel level, where sparging can cause waste aerosolization.

  NOTE: An assumption that a constant low level in the vessel is caused by the earthquake, such that the nozzle air impinges on the liquid surface for a prolonged period, is judged to be unrealistic.

  A detailed discussion of these ASP APA Air Jet Aerosolization events is provided in Section 3.4.2.4.

Aerosolization of significant amounts of waste from mechanical agitators striking and splashing the waste liquid surface, due to AST-B (TK-221), FFT-B (TK-222), or MSTT (TK-224) agitator operation post-seismic, is not deemed credible. This is due to the following combination of concurrent events that would have to occur:

- Electric power to the mechanical agitator must remain available; otherwise, the motive force for the blades is lost; and
- An assumed failure of the vessel wall must occur at a level just at the mechanical agitator level but must not be low enough to result in a spill that empties the vessel.

Aerosolization of significant amounts of waste from liquid jet impingement on the sidewalls of the tank, due to IST (TK-220), DSSHT (TK-207), or AFDT (TK-228) mixing eductor operation post-seismic, is not deemed credible. This is due to the required combination of concurrent conditions described below that must occur to achieve prolonged aerosolization by the eductors following a seismic event:

- Electric power to the drive pump for the mixing eductor must remain available; otherwise, the motive force for the liquid jet is lost; and
- An assumed failure of the vessel wall must occur at a level just below the eductor nozzle but must not be low enough to result in a spill that empties the vessel.

For vessels with mixing eductors, aerosolization of significant amounts of waste as the result of liquid jet impingement on the sidewalls of the tank, due to mixing eductor operation post-seismic, is not deemed credible. This is due to the required combination of concurrent conditions described below that must occur to achieve prolonged aerosolization by the eductors following a seismic event:

- Electric power to the drive pump for the mixing eductor must remain available; otherwise, the motive force for the liquid jet is lost; and
- An assumed failure of the vessel wall must occur at a level just below the eductor nozzle but must not be low enough to result in a spill that empties the vessel.

Liquid in some of the process vessels may also be subject to the aerosolization effect of a pressurized leak after a seismic event. If the liquid is being transferred, recirculated or sampled by utilizing a pump at the time the seismic event occurs and there is a failure on the discharge piping of the pump, the liquid could be jetted against a nearby wall or structure, resulting in air interaction and impact aerosolization stresses. The process vessels with external pumps that might be subject to this scenario are identified in S-CLC-J-00030, *Accident Analysis of Pressurized Leak Aerosolization Events*[66]. The process vessels in the Process Building and AFF that are subject to a potential pressurized leak event are the AST-A (TK-101), FFT-A (TK-102), SSRT (TK-104), SSFT (TK-109), WWHT (TK-105), CSDT-A (TK-103), ASDT (TK-601), Lab Drain Tank (TK-235), Solvent Solution Feed Tank, BDT (TK-206), SEHT (TK-205), Strip Effluent Pump Tank (TK-215), Solvent Drain Tank (TK-208), SHT (TK-202), IST (TK-220), AST-B (TK-221), FFT-B (TK-222), DSSHT (TK-207), MSTT (TK-224), and CSDT-B (TK-223). Note that subjecting the liquid in these process vessels to the accident stresses of both a spill and a liquid jet aerosolization is logical because liquid that is sprayed against a solid structure by the liquid jet aerosolization event would then fall to the floor, conservatively represented as a spill event.

ASP Process Vessel and Process Vessel Cell fires after a seismic event are not deemed to be credible in the WTE, SSFT Cell, SEHT Cell, AST-A Cell, FFT-A Cell, ASDT Cell, and SSRT/WWHT Cell. No combustible materials are used in the cell construction or in the construction of process vessels and piping, and the dark cell concept assumes removal of all transient combustible material prior to operation. Further, there is no electrical equipment in the cells (except for a temperature element in a thermowell and leak detection in the extended sleeve valves), and all NFPA requirements for grounding and ignition controls are employed in these cells. The temperature of the waste could increase after a seismic event, due to radioactive decay heat, but several weeks/months would be needed to reach the solvent flash point and a number of pre-existing assumptions are needed to effect a fire including complete failure of solvent removal hardware, Operator failure to remediate after contents of SHT (TK-202) (solvent) are transferred, and no building/vessel ventilation or chilled water is provided.

However, the solvent itself is a flammable liquid. If spilled into an area outside of a Process Vessel Cell, the solvent could come in contact with an ignition source. Because the solvent may contain significant amounts of radioactive Cs, a solvent fire could result in the release of significant quantities of radioactive material. Therefore, the bounding post-seismic fire consumes the 500-gallon inventory of Cs-laden CSSX solvent in a P&VG labyrinth.

In the AFF, the IST (TK-220) and AST-B (TK-221) share a common dike in the AFF as do the FFT-B (TK-222), DSSHT (TK-207), and MSTT (TK-224). As discussed above, the AFF process vessels are all assumed to spill their entire contents to their associated common dike. In the unmitigated case, a certain amount of solvent is assumed to exist in process vessels. Therefore, the IST (TK-220), AST-B (TK-221), FFT-B (TK-222), and MSTT (TK-224) are assumed to contain a volume of solvent in a floating layer prior to the event, and the spilled liquid in the dikes contains a corresponding amount of flammable solvent. The DSSHT (TK-207) may have the potential to accumulate solvent during single-strike operations but during double-strike operations, there is no direct path from the CSSX process to the DSSHT (TK-207). If significant quantities of solvent were to begin to accumulate in DSSHT (TK-207) during multi-strike operations, the solvent would be quickly detected by the routine samples taken of the DSS to demonstrate compliance with the downstream facility WAC. Therefore, it is reasonable to assume that there is not a distinct floating layer of solvent in the DSSHT (TK-207) at the time of the seismic event that contributes significantly to the post-seismic AFF fire.

The solvent in the dikes is assumed to be ignited by an unspecified ignition source after the seismic event. The burning solvent then boils off a fraction of the radioactive waste. It is assumed that burning solvent only impacts the waste from the vessel from which the solvent originated. Therefore, the FFT-B (TK-222) solvent fire only affects the concentrated FFT-B (TK-222) waste in the dike and the MSTT (TK-224) solvent fire only affects the concentrated MSTT (TK-224) waste in the dike. This is conservative because no credit is taken for the low-activity DSSHT (TK-207) waste mixing with the other waste and reducing the consequences of the dike fire. The combined spill/fire has a higher consequence than other possible combinations of events. Likewise, the IST (TK-220) solvent fire only affects the concentrated IST (TK-220) waste in the dike and the AST-B (TK-221) solvent fire only affects the concentrated AST-B (TK-221) waste.

The above sequence of events that occur as the result of a seismic event represents the unmitigated scenario for a seismic event impacting the Process Building and AFF. The unmitigated seismic scenario for the Process Building can be summarized as follows.

- Transfer to the SWPF from the Tank Farm, AST-A (TK-101), FFT-A (TK-102), SSRT (TK-104), SSFT (TK-109), SAST (TK-127), WWHT (TK-105), CSDT-A (TK-103), ASDT (TK-601), Lab Drain Tank (TK-235), Contactors, Solvent Strip Feed Tank (TK-217), BDT (TK-206), DSS Coalescer (TK-201), DSS Stilling Tank (TK-211), SEHT (TK-205), Strip Effluent Stilling Tank (TK-212), Strip Effluent Coalescer (TK-203), Strip Effluent Pump Tank (TK-215), Solvent Drain Tank (TK-208), and SHT (TK-202) spill their entire liquid volumes due to vessel or piping failure.
- The AST-A (TK-101), FFT-A (TK-102), SSRT (TK-104), SSFT (TK-109), WWHT (TK-105), CSDT-A (TK-103), ASDT (TK-601), Lab Drain Tank (TK-235), Solvent Strip Feed Tank (TK-217), BDT (TK-206), SEHT (TK-205), Strip Effluent Pump Tank (TK-215), Solvent Drain Tank (TK-208), and SHT (TK-202) liquid volumes are subject to a pressurized spray aerosolization event due to failure of pump discharge piping.
- The PMVS HEPA filters are subject to crushing by unspecified falling debris.
- The Strip Effluent Pump Tank (TK-215) and Solvent Strip Feed Tank (TK-217) are subject to an in-vessel explosion that fails the vessel.
- The PVVS HEPA filters are failed, due to exposure to the blast effects of the explosion in the Strip Effluent Pump Tank (TK-215) or Solvent Strip Feed Tank (TK-217).
- The entire 500-gallon inventory of Cs-laden CSSX solvent is spilled into a P&VG labyrinth, ignites and burns.

The unmitigated seismic scenario for the AFF can be summarized as:

- The IST (TK-220), AST-B (TK-221), FFT-B (TK-222), DSSHT (TK-207), MSTT (TK-224), and CSDT-B (TK-223) spill their entire liquid volumes due to vessel or piping failure.
- The IST (TK-220), AST-B (TK-221), FFT-B (TK-222), DSSHT (TK-207), MSTT (TK-224), and CSDT-B (TK-223) liquid volumes are subject to a pressurized spray aerosolization event due to failure of pump discharge piping.
- The spilled liquid volumes of the IST (TK-220), AST-B (TK-221), FFT-B (TK-222), and MSTT (TK-224) are subject to boiling due to a solvent fire.

#### 3.4.2.5.2 Source Term Analysis

The potential unmitigated radiological consequences to both the Onsite receptor located at 100 meters from the release point (Onsite-2) and Offsite receptors of an unmitigated seismic event impacting the Process Building have been analyzed in S-CLC-J-00084[64]. The analysis identifies the unmitigated seismic scenario and then sums the appropriate individual consequences calculated in previous calculations to determine the overall seismic event radiological consequences. Therefore, there is no direct source term for the seismic that is developed. Source

terms are developed for the individual events that are then summed to determine the seismic event source term.

#### 3.4.2.5.3 Consequence Analysis

The analysis documented in S-CLC-J-00084[64] demonstrated that the maximum radiological consequences to the Offsite receptor from a seismic event impacting the Process Building are less than 1 rem. The analysis also determined that the maximum unmitigated radiological consequences to the Onsite-2 receptor from a seismic event impacting the Process Building are greater than 100 rem.

The analysis documented in S-CLC-J-00084[64] demonstrated that the maximum radiological consequences to the Offsite receptor from a seismic event impacting the AFF are less than 1 rem. The analysis also determined that the maximum unmitigated radiological consequences to the Onsite-2 receptor from a seismic event impacting the AFF are less than 100 rem.

Based on the above, the maximum total radiological consequences to the Offsite receptor from a seismic event impacting the Process Building and AFF at SWPF is less than 1 rem. The maximum total radiological consequences to the Onsite-2 receptor from a seismic event impacting the Process Building and AFF at SWPF are greater than 100 rem.

#### 3.4.2.5.4 Comparison to the Evaluation Guideline

Based on the consequences discussed in the previous section, SC controls are not required to either prevent or mitigate a seismic event impacting the Process Building and AFF to protect the health and safety of the Offsite receptor.

Based on the consequences discussed in the previous section, SS controls are required to either prevent or mitigate a seismic event impacting the Process Building and AFF to protect the health and safety of the Onsite-2 receptor.

Consequences to the immediate worker (Onsite-1) were not evaluated explicitly in S-CLC-J-00084[64]. However, if an unmitigated seismic event impacting the Process Building did occur, consequences to the facility worker (Onsite-1) are assumed to be significant. The event poses significant risk to the worker due to the radiological material involved in the event. A serious life-threatening injury to the Onsite-1 receptor is also possible due to the direct physical effects of the seismic event, including impact by falling debris and structural collapse. After this event, continued presence in the area due to injury could also result in a significant inhalation dose. Based on these considerations, SS controls are required to either prevent or mitigate the consequences of a seismic event impacting the Process Building to protect the health and safety of the Onsite-1 receptor.

For the AFF, the consequences of a seismic event to the Onsite-1 receptor are estimated to be low because the worker is trained to respond to the hazards by immediately exiting the facility and not re-entering until adequate precautions are taken. Therefore, SS controls are not required to protect the health and safety of the Onsite-1 receptor.

#### 3.4.2.5.5 Summary of Safety-Class and Safety Significant SSCs, SACs, and TSR Controls

Because the unmitigated consequences to the Offsite receptor of a seismic event impacting the Process Building and AFF at SWPF are well below the EG, no SC controls are required. However, because the unmitigated consequences to the Onsite-1 receptor from a seismic event impacting the Process Building were deemed to be significant and challenge the TOCs and the consequences to the Onsite-2 receptor were determined to exceed the TOCs, SS controls were selected to reduce the risk to the facility and co-located worker. Additionally, although neither SC or SS controls are required to mitigate the consequences of a seismic event that impacts the AFF to protect the health and safety of the Offsite, Onsite-1 or Onsite-2 receptors, various SSCs at SWPF have been designated as SS in order to minimize the risk posed by seismic events that impact the AFF and provide additional DID.

In order to minimize the risk posed by seismic events, various SSCs at SWPF have been designated as PC-3 for seismic design requirements. The credited PC-3 SSCs along with a description of the function required after a seismic event are discussed below. Additionally, items that are provided to provide additional DID to protect the health and safety of the onsite receptor are discussed. The credited SSCs act to prevent or mitigate the potential consequences of a seismic event at SWPF.

Process vessels and equipment within the Process Vessel Cells (AST-A [TK-101], FFT-A [TK-102], SSRT [TK-104], SSFT [TK-109], SEHT [TK-205], WWHT [TK-105], Lab Drain Tank [TK-235], and ASP CFF housings and ASP backpulse tanks) provide an SS PC-3 confinement function during and following a seismic event. In addition, the waste piping in the Process Vessel Cells that extend the primary confinement boundary of the seismically qualified vessels is designated as SS and PC-3 for waste confinement after a seismic event.

Sample lines that contain material with a potential to cause a significant radiological consequence from the process vessel (AST-A [TK-101], FFT-A [TK-102], SSRT [TK-104], SEHT [TK-205], and WWHT [TK-105]) to the Hot Cell and from the Hot Cell back to the process vessel are designed to SS and PC-3 requirements. In addition, the Hot Cell itself and the drain lines from the Hot Cell to the Lab Drain Tank (TK-235) are designed to SS and PC-3 requirements.

Overflow lines from the AST-A (TK-101), SSRT (TK-104), WWHT (TK-105), and Lab Drain Tank (TK-235) are designed to SS and PC-3 requirements. The overflow lines on these vessels are deemed important enough for SS and PC-3 requirements because the vessels are subject to potential overflow events as part of the normal process of the SWPF with minor failures (e.g., the AST-A [TK-101] receives large volumes of liquid waste from the Tank Farm and could be overflowed by failure to monitor the transfer). The overflow lines direct liquid overflowing the vessels to the process cell sump. Each overflow line ends within the sump. The configuration of the overflow line, in conjunction with the limited volume of the cell sumps, prevents elevated spills from occurring due to vessel overflows and limits the total overflow volume that could splash and aerosolize in the sump before the liquid covers the overflow discharge.

Overflow lines for the ASDT (TK-601) and Solvent Drain Tank (TK-208) are designed to SS and PC-3 requirements. The lines direct flow from the vessels to the cell sump. The lines are required to function after a seismic event because the total volume of liquid that could be directed to the ASDT (TK-601) and Solvent Drain Tank (TK-208) exceeds the volume of the tanks. The overflow lines ensure that liquid directed to the ASDT (TK-601) and Solvent Drain Tank (TK-208) remains in the ASDT Cell below-grade volume and prevents surface liquid releases outside the Process Building.

Waste piping in the North and South ASP P&VGs, in the WTE up to the seal plate, SSFT (TK-109) piping through the CSSX P&VG up to the high point in the Contactor Operating Deck and Contactor Support Floor Area, strip effluent recirculation piping to the contactors (via SP-205) up to the high point in the Contactor Operating Deck and Contactor Support Floor Area, and SEHT (TK-205) piping in the CSSX P&VG are designated as SS and PC-3 for waste confinement after a seismic event. The waste piping in the WTE is designated as SS and PC-3 because the piping normally conveys material with high dose potential (Tank Farm waste, concentrated MST/solids, and concentrated strip effluent). The previously described waste piping in the P&VGs is designated as SS and PC-3 because limited access to these areas during normal operation is allowed. SSFT (TK-109) and SP-205 waste piping up to the high point in the contactor area is designated as SS and PC-3 to limit the volume that could gravity drain out of the source tank after the transfer pumps are stopped, assuming no valves are re-aligned. Confinement of the liquid waste in the piping protects the facility worker from potential exposure following a seismic event.

The above actions confine the bulk of the waste with the highest inhalation dose potential within PC-3 vessels and associated piping. Potential overflows from those PC-3 vessels are limited to small volumes, with negligible consequences.

Design of the ASP, Sample, and CSSX P&VGs ensures that spills within the P&VGs are channeled to the drain lines going to the ASDT Cell (e.g., berms, lower floor elevation, with respect to adjacent areas). The CSSX Contactor Operating Deck and Contactor Support Floor Area, East and West CSSX Tank Cells, South Chases, and Hot Cell also provide spill containment following a seismic event. Drain lines from the ASP, Sample, and CSSX P&VGs, CSSX Contactor Operating Deck and Contactor Support Floor Area, South Chases, and East and West CSSX Tank Cells channel spills (waste and/or solvent) to the ASDT (TK-601) and Solvent Drain Tank (TK-208) in the ASDT Cell. Drain lines from the Analytical Laboratory Hot Cell channel spills (waste and/or solvent) to the Lab Drain Tank (TK-235) in the ASDT Cell. The drain lines mitigate exposure of facility workers and reduce the probability of large solvent fires by directing waste and solvent leakage to the tanks in the ASDT Cell. Therefore, these systems and structures are designed to SS and PC-3 requirements to ensure that the above functions can be accomplished after a seismic event.

The Process Vessel Cells and WTE are designed to contain any spills that occur within them. Because these areas are designed to be unoccupied for the life of the facility, containing the spills mitigates the exposure of facility workers to the spills after a seismic event. Therefore, the structures are designated as SS and PC-3.

Consequences of a spill event involving all AFF vessels were low to the Onsite-1 receptor because the worker is trained to respond to the hazards by exiting the facility. As a result, the AFF design basis is PC-1 (life safety). Although the overall AFF design basis is PC-1, the steel structural members of the AFF are supported to PC-3 seismic standards to prevent failure of the structures causing damage to the CPA. In addition, one pathway from the AFF process vessel area is through the perimeter CPA wall; therefore, this door is designed to the PC-3 standards of the CPA. Thus, there is minimal risk of a facility worker being trapped in the AFF for a prolonged period after an NPH event.

The Strip Effluent Pump Tank (TK-215) and Solvent Strip Feed Tank (TK-217) vapor spaces reach CLFL within 8 hours following a seismic event. The SSRT (TK-104), SAST (TK-127), CSDT-A (TK-103), BDT (TK-206), SEHT (TK-205), Strip Effluent Stilling Tank (TK-212), and Caustic Wash Tank (TK-204) vapor spaces do not reach CLFL within 8 hours following a seismic event, but could exceed flammable conditions within a 10-day period. To prevent an explosion in these vessels, air is supplied to each vessel from a PC-3 ADS at a rate sufficient to dilute the flammable vapors generated by the waste to below the CLFL. Note that the ADS is PC-3 through the rotometers that supply purge air to each vessel. However, from the rotometers to the vessels, only the piping to those vessels located in the Process Vessel Cells is PC-3 (SSRT [TK-104], SAST [TK-127], CSDT-A [TK-103], and SEHT [TK-205]). The piping to the other vessels is PC-1 because the vessels themselves are all PC-1. The ADS has a sufficient back-up supply from a compressed air storage source to ensure that required flows are maintained for a period of four days following loss of the Plant Air compressors. The four-day period is judged sufficient to allow time to replenish the back-up compressed air supply, restore the normal air supply, provide a portable compressed air source, or provide alternate means of flammability control in the process vessels (e.g., restore PVVS flow from the vessel). Note that the ADS header to the vessels with a connection point for a portable air supply is designed to PC-3 requirements to ensure the availability after a seismic event. To ensure that there is a four day supply of back-up compressed air available for the ADS at the beginning of a seismic event, SS monitoring of the pressure on the Back-up Air Receivers is provided. Additionally, to ensure that the ADS sizing assumption of an initial flammable gas volume in the process vessels of no more than 25% of CLFL, SS monitoring of the pressure in the normal purge air header and the low pressure backup purge header is provided to allow verification of adequate ADS flow to selected vessels that are not provided with a passive air purge orifice to maintain the CLFL below 25% of CLFL during normal operation. SS monitoring of the PVVS header pressure is also provided to allow verification of adequate vessel purge flow to maintain the CLFL below 25% of CLFL for vessels that are provided with a passive air purge orifice during normal operation.

Several of the other process vessels in these cells have bounding times to CLFL only slightly in excess of 10 days in both the unmitigated and mitigated cases. To ensure that post-accident responses required to prevent flammable conditions are possible in these vessels prior to the time CLFL is reached, the ADS piping internal to the Process Vessel Cells meets PC-3 requirements. The ADS is not required to provide a post-seismic back-up supply from a compressed air storage source to vessels other than the SSRT (TK-104), SAST (TK-127), CSDT-A (TK-103), and SEHT (TK-205) because these other vessels do not become flammable within 10 days. If the vapor space in a process vessel does reach flammable conditions, the process vessels are

grounded per NFPA 30[54] to further reduce the likelihood of an explosion occurring in a process vessel.

The temperature in the process vessels has an important impact on the time to reach CLFL. A major contributor to vessel heat-up is the addition of heat to the vessel from external recirculation pumps. To limit the potential for excessive heat-up of the process vessels after a seismic event due to the addition of pump heat, all external recirculation pumps are tripped by the Operators within two hours after the occurrence of a seismic event. The filter recirculation pumps associated with the FFT-A (TK-102) and the SSRT (TK-104) are by far the largest process pumps in the CPA. Because these pumps are relatively large and the rate they can perform work on the process vessel contents is relatively high, an SS/PC-3 interlock stops the filter recirculation pumps when the high temperature setpoint is reached in the associated vessel. This engineered feature reduces the reliance on operator action for stopping the pumps that have the largest potential impact on tank heatup. The pump trip ensures that the FFT-A (TK-102) and SSRT (TK-104) do not become flammable within 10 days following a seismic event.

Prior to the time of the seismic event, the vapor spaces of the AFF process vessels are maintained at a low fraction of the CLFL by the supply of purge air from the normal compressed air system to the vessel vapor space. Accumulation of trapped gas in settled solids up to the time of the seismic event is prevented by agitation of the waste in FFT-B (TK-222) and MSTT (TK-224). Any operating external recirculating pumps on the vessels in the AFF are tripped within two hours of the occurrence of the seismic event. The time to reach flammable conditions in the AFF process vessels under these conditions is greater than 10 days; therefore, post-seismic explosions are not credible. The filter recirculation pumps associated with the FFT-B (TK-222) are by far the largest process pumps in the AFF. Because these pumps are relatively large and the rate they can perform work on the process vessel contents is relatively high, an SS/PC-3 interlock stops the filter recirculation pumps when the high temperature setpoint is reached in the associated filter recirculation loop. This engineered feature reduces the reliance on operator action for stopping the pumps that have the largest potential impact on tank heatup.

The other external recirculation pumps in the CPA and AFF are much smaller than the filter recirculation pumps and, therefore, add much less heat to their associated vessels. The heatup rate of these vessels is much lower than the FFT-A (TK-102), SSRT (TK-104), and FFT-B (TK-222) due to external recirculation pump heat addition. An automatic pump trip for these pumps is not required because of the lower heatup rate. Manual tripping of the pumps after an event such as an earthquake that results in a loss of vessel cooling is sufficient to mitigate the vessel heatup due to the pump heat addition. Manual tripping of the pumps is normally accomplished through the Basic Process Control System (BPCS) if available. However, the BPCS is not designed to safety-related requirements and is not qualified to survive a seismic event so the BPCS may not be available for tripping the recirculation pumps manually after an earthquake or other accident. Therefore, SS, PC-3 designed manual disconnect switches are provided for the two 13.8-kV feeders to the SWPF. When these switches are activated manually, all power to all of the external recirculation pumps is removed.

Although full recovery to normal operations following seismic events is not a safety requirement, the safety analysis shows that consequences from a post-seismic explosion of some process vessels beyond 10 days are serious enough that some additional DID measures would be appropriate to maintain an air purge to prevent an explosion. This is in addition to the seismically qualified portion of the ADS. For this reason, the PVVS piping associated with the AST-A (TK-101), FFT-A (TK-102), SSRT (TK-104), SSFT (TK-109), SEHT (TK-205), and WWHT (TK-105) in the Process Vessel Cells, up to and including the first isolation damper external to the cells, is classified as PC-3 to provide the capability to ventilate the process vessel after a seismic event.

AST-A (TK-101), FFT-A (TK-102), and SSRT (TK-104) normally contain MST/sludge solids that may potentially trap flammable vapor as the solids settle, due to loss of the APAs caused by the seismic event. If allowed to accumulate unchecked in the settled solids for prolonged periods, a rapid release of the trapped gas inventory has the potential to overwhelm the purge air flow rate through the vessel vapor space and cause the vessel to exceed the CLFL for some period of time. The Plant Air lines to the APA pulse pots, the pulse pots, and their nozzles are required to remain operable after all credible accidents (including seismic) to ensure that waste in the ASP tanks can be periodically agitated through the APA pulse pots. The APA air supply lines within the Process Vessel Cells and an available stub-out temporary air supply connection external to the Process Vessel Cells are seismically qualified (PC-3). This provides a DID post-seismic recovery capability. It is not necessary to operate APAs in their normal mode in order to mobilize settle solids. Air sparging was shown to adequately mix vessel contents to preclude the unabated build-up of trapped gas in MST sludge solids (P-RPT-J-00002, *SWPF Test Report: Air Pulse Agitator Pilot-Scale Test*[67]).

The APA pulse pots, nozzles, and air supply piping within the vessels for AST-A (TK-101), FFT-A (TK-102), SSRT (TK-104), WWHT (TK-105), and SSFT (TK-109) are PC-3. This ensures that air jets from the APAs into the liquid waste do not occur at elevations above the nozzles following a seismic event, providing further risk reduction for APA air jet aerosolization events in these vessels.

The CPA provides a gross secondary confinement function for NPH events. The safety analysis does not directly credit the CPA structure with preventing a release due to an NPH event. The CPA structure does, however, offer an additional DID barrier for an NPH event, if the primary confinement barrier(s) (i.e., process vessels and piping) were to fail.

The CPA structure is credited with directly supporting the primary vessels and piping that serve as the primary confinement barrier for a seismic event. The CPA structure is, therefore, designed to the same seismic standard as the primary confinement (PC-3). The CPA structure is designed to PC-3 NPH standards to protect the primary confinement boundaries.

Structures adjacent to the CPA are designed to prevent catastrophic failure due to an NPH event or are located a distance away from the CPA structure, such that their failure does not result in an adverse impact load to the CPA. Any additional residual load imparted by a failure of the support structure members was considered in the design of the CPA structure.

The Process Vessel Cell walls and Operating Deck floor are also required to provide sufficient fire resistance and insulation to act as a fire barrier to protect the equipment from external fires. The CPA outer walls are credited with protecting the Process Vessel Cells and process vessels from the effects of a fire originating external to the Process Building.

Another factor that has an important impact on the protection of the facility worker from the effects of a seismic event is to exclude their presence from areas with high potential inhalation dose. Therefore, the Process Vessel Cells, WTE, and East CSSX Tank Cell are designed to be unoccupied for the life of the facility and entry is prohibited following initial commencement of radioactive operations. Additionally, the ASP, Sample, and CSSX P&VGs, the CSSX Contactor Operating Deck and Contactor Support Floor Area, West CSSX Tank Cell, Hot Cell, Glove Boxes 8 and 9, and South Chases are unoccupied during normal operation and entry is restricted. These features reduce the likelihood of a facility worker being directly impacted by the radiological effects of a seismic event.

The CR Operators must remain in the CR during and after a seismic event to monitor and respond to the event. To provide protection for the CR Operators of the effects of a seismic event, the CR is designed to PC-3 seismic standards and includes sufficient shielding from adjacent areas containing radioactive material to allow continued occupancy.

Personnel that are located in the laboratory at the time a seismic event occurs would be at risk from the release of potentially highly radioactive material in the Hot Cell. To provide protection for the laboratory personnel from the release of this highly radioactive material as the result of a seismic event, the Hot Cell is designed to SS and PC-3 standards and includes sufficient shielding to provide protection for the laboratory personnel.

The control that has the greatest effect on reducing the unmitigated consequences of a seismic event in the AFF is the program to periodically remove any accumulated solvent from process vessels, thereby minimizing the amount of solvent in the vessels that could become involved with a fire at the time of the seismic event.

The gamma detector downstream of the BDT (TK-206) and the turbidity detector on the line from the SSFT (TK-109) provide an interlock function to protect the AA assumptions regarding the AFF inventory, such that only a $^{137}$Cs-depleted waste stream enters the AFF.

The controls in the following lists summarize the controls and their safety functions credited for this DBA and as discussed in detail in the previous text in this section. The controls in the following list are identified as either a preventative control (P) or as a mitigative control (M). Each control includes a control identifier number to allow cross referencing to the controls developed from the HA and other DBAs. The preventive and mitigative controls that constitute the 1$^{st}$ LOC are identified appropriately (i.e., 1$^{st}$ LOC). The 1$^{st}$ LOCs are defined as the group of controls that taken together are the minimum set of controls that provide adequate protection of the health and safety of the offsite and onsite receptors from the postulated consequences of the identified DBA. Other preventive and mitigative controls identified in the following list provide additional assurance of protection of the health and safety of the offsite and onsite receptors

beyond that provided by the 1st LOCs alone and provide defense-in-depth. Administrative controls that are included in the 1st LOC are required to be SACs. All SS controls developed in the AA are listed in Table 3.7-22.

In addition to the mitigative or preventive SS controls, some ICs that are important to maintain the validity of the analysis were also designated SS. These SS ICs for the seismic event affecting the Process Building and AFF are:

- IC-11: High Turbidity Interlock (provided for the CSS stream from the SSFT (TK-109) to detect filter breakthrough);
- IC-10: BDT Gamma Interlock (ensures that only a $^{137}$Cs depleted waste stream enters the AFF);
- IC-1: Access Control (Personnel entry into the Process Vessel Cells, East CSSX Tank Cell, and WTE is prohibited following initial commencement of radioactive operations);
- IC-13: ADS Low Pressure Alarms (monitor the Back-up Air Receivers pressure to ensure four days of air supply to ADS, monitor ADS header pressure to ensure adequate flow to ensure less than 25% of CLFL for the SDT (TK-208), Solvent Strip Feed Tank (TK-217), DSS Coalescer (TK-201), SHT (TK-201), and Contactor Header.); and
- IC-12: PVVS Low-Vacuum Alarm (indicates low flow and provided to ensure the initial concentration of flammable gas in vessel vapor spaces is less than 25% of CLFL).

The following controls are credited with preventing or reducing the frequency or consequence of the seismic event impacting the Process Building and AFF:

- (P) EC-17: Process Vessels and Equipment in Process Vessel Cells (AST-A [TK-101], FFT-A [TK-102], SSRT [TK-104], SSFT [TK-109], SEHT [TK-205], WWHT [TK-105], Lab Drain Tank [TK-235], ASP CFF housings, and ASP backpulse tanks); 1st LOC
- (P) EC-12, EC-14, and EC-17: Waste Piping (in the ASP P&VGs, in the Process Vessel Cell areas that extends the primary confinement boundary of the seismically qualified vessels, in the WTE up to the seal plate, sample lines from the AST-A (TK-101), FFT-A (TK-102), SSRT (TK-104), SEHT (TK-205) and WWHT (TK-105) to the Hot Cells and from the Hot Cells into the process vessel (not in the Hot Cells), SSFT (TK-109) piping through the CSSX P&VG up to the high point in the CSSX Contactor Operating Deck and Contactor Support Floor Area, strip effluent recirculation piping to the contactors (via SP-205) up to the high point in the Contactor Operating Deck and Contactor Support Floor Area, and SEHT (TK-205) piping in the CSSX P&VG); 1st LOC
- (P) EC-20: APA Air Supply Lines (within the Process Vessel Cell and an available stub-out for a portable air supply external to the Process Vessel Cells for the AST-A [TK-101], FFT-A (TK-102), SSRT [TK-104], SSFT [TK-109], and WWHT [TK-105]);
- (P) EC-21: APA In-vessel Air Supply Piping and the APAs (AST-A [TK-101], FFT-A (TK-102), SSRT [TK-104], SSFT [TK-109], and WWHT [TK-105]); 1st LOC

- (P) EC-1 and EC-2: ADS and Backup Air Receiver (with connection point for the portable air supply); 1st LOC
- (P) IC-4: CPA Structure; 1st LOC
- (P) EC-4: CR Design; 1st LOC
- (P) EC-9: Hot Cell Design; 1st LOC
- (M) IC-4 and EC-3: Spill Containment (ASP, Sample, and CSSX P&VGs, CSSX Contactor Operating Deck and Contactor Support Floor Area, Process Vessel Cells, WTE, East and West CSSX Tank Cells, South Chases, Hot Cells,); 1st LOC
- (M) EC-13: Drain lines to ASDT Cell Tanks (from the ASP, Sample, and CSSX P&VGs, CSSX Contactor Operating Deck and Contactor Support Floor Area, East CSSX Tank Cell, West CSSX Tank Cell, South Chases, and Hot Cells); 1st LOC
- (P) EC-18: Process Vessel Overflow Lines (ASDT [TK-601], Solvent Drain Tank [TK-208], Lab Drain Tank [TK-235], AST-A [TK-101], SSRT [TK-104], and WWHT [TK-105]); 1st LOC
- (P) EC-11.c: FFT-A and SSRT Tank Temperature Interlocks to Filter Recirculation Pumps; 1st LOC
- (P) EC-11.c: FFT-B Recirculation Loop Temperature Interlocks to Filter Recirculation Pumps (PC-3); 1st LOC
- (P) AC-2: 13.8-kV Manual Disconnect Switches;
- (P) EC-22: PVVS piping in Process Vessel Cells up to and including the first isolation damper external to the cells (AST-A [TK-101], FFT-A [TK-102], SSRT [TK-104], SSFT [TK-109], SEHT [TK-205], and WWHT [TK-105];
- (P) EC-7: Grounding per NFPA 30[54] (Vessels in Process Vessel Cells);
- (P) AC-10: Seismic Event Response (trip pumps after occurrence of a seismic event); 1st LOC
- (P) AC-4: Solvent Removal Program limits the solvent in each process vessel (for AFF during multi-strike operation); 1st LOC and
- (P) AC-1: Access Controls (Personnel entry into the ASP, Sample, and CSSX P&VGs, CSSX Contactor Operating Deck and Contactor Support Floor Area, West CSSX Tank Cell, Hot Cell, Glove Boxes 8 and 9, and South Chases for maintenance and other reasons is an expected activity following initial commencement of radioactive operations. Normal operating/maintenance procedures contain appropriate guidance to ensure that potential hazards in the area are removed/controlled before entry. An initial survey of radiological conditions in the area will be performed before personnel perform work activities. Personal entry into the AFF following a seismic event is restricted until it is determined that entry is safe.) 1st LOC

After application of the 1st LOC and PC-3 controls listed above, the mitigated consequences of the seismic event impacting the Process Building and AFF at SWPF are judged to be low for the facility worker and Onsite-2 receptor and negligible for the Offsite receptor. This conclusion is based on the fact that the controls that are designated as 1st LOC will prevent all of the pressurized spray, explosion, and fire events in the CPA that are assumed to occur for an unmitigated seismic event. This fact leaves only the consequences related to the seismic event impact on the AFF. The dominant contributor to the consequences of a seismic event impacting the AFF is a fire in the dikes resulting from the spill of solvent and waste from piping or vessel failures. However, one of the 1st LOC controls (AC-4) limits the volume of solvent that will be present in the AFF process vessels and piping at the time the seismic event occurs. The reduction in the volume of solvent available to act as fuel for a dike fire directly reduces the consequences resulting from a post-seismic dike fire in the AFF. Therefore, taken together, the 1st LOCs as identified above result in a large reduction in the consequences to all receptors and provide adequate protection of the health and safety of the workers and the public.

This page intentionally left blank.

## 3.5 Beyond Design Basis Accidents

DOE-STD-3009-94, Change Notice No. 3[3] requires the analysis of accidents which may be beyond the design basis of the facility to provide a perspective of the residual risk associated with the operation of the facility. These accidents are called BDBAs. BDBAs are accidents of the same type as DBAs (e.g., explosions, fires, aerosolization, etc.) but with parameters defining the accident progression that are more severe than those for the DBA. This category also includes those accidents for which consequences were not determined because the frequency of occurrence of the event was determined to be Beyond Extremely Unlikely (BEU).

BDBAs need not be analyzed to the same level of detail as DBAs. DOE-STD-3009-94, Change Notice No. 3[3] only requires that they be analyzed to the extent required to provide insight into the magnitude of the consequences to provide perspective on potential facility vulnerabilities. Therefore, analysis of BDBAs is not required to provide assurance of public or worker health and safety. The BDBAs analyzed for SWPF consist of 500-gallon Solvent Fire with SSRT-1 Waste and a Seismic Event with Mistransfers. The consequences of these BDBAs are compared to the EGs in order to determine the sensitivity of the related DBAs to changes in the accident progression.

### 3.5.1 500-Gallon Solvent Fire with SSRT-1 Waste BDBA

The DBA for a fire in the ASP Process Vessel Cells event at SWPF involves a limited amount of solvent available to burn and generate releases of the ASP Process Vessel waste. The solvent volume was limited to the bounding volume that would accumulate in the ASP Process Vessels during normal operation. However, a total of 500 gallons of CSSX solvent is used in the SWPF process. Therefore, to ensure that no new safety related controls would result if an ASP Process Vessel Cell fire with 500 gallons of CSSX solvent did occur, an ASP Process Vessel Cell fire is postulated with 500 gallons of CSSX solvent available as fuel and with the SSRT-1 process stream (the highest dose potential fluid in the SWPF process) as a BDBA. This combination of solvent volume and waste stream has the highest potential radiological consequences of any theoretically possible fire event at SWPF. Therefore, the ASP Process Vessel Cell fire with 500 gallons of CSSX solvent is evaluated as a BDBA to provide insight into the maximum theoretical consequences of fires at SWPF and to identify any potential vulnerability.

The potential radiological consequences to both the onsite receptor located at 100 meters from the release point (Onsite-2) and Offsite receptors of an ASP Process Vessel Cell fire event with 500 gallons of solvent and involving SSRT-1 process stream waste has been analyzed (S-CLC-J-00041[39]). The Process Vessel Cell ventilation system flow rates permit complete combustion of the solvent in minutes, rather than hours.

The analysis documented in S-CLC-J-00041[39] demonstrated that the radiological consequences to the Offsite receptor for the ASP Process Vessel Cell fire with 500 gallons of solvent at SWPF are 1.28 rem. These consequences do not challenge the EG (25 rem). Therefore, no SC controls are required to protect the health and safety of the public from ASP Process Vessel Cell fires with 500 gallons of CSSX solvent at the SWPF even if such events are assumed to be credible, which is not supported by the SB for the facility.

The analysis also demonstrated that the unmitigated radiological consequence to the Onsite-2 receptor for an ASP Process Vessel Cell fire involving 500 gallons of CSSX solvent and the SSRT-1 process stream is approximately 784 rem. These consequences exceed the TOC for the Onsite-2 receptor. This implies that SS controls for the ASP Process Vessel Cell fire with 500 gallons of solvent event should at least be considered. However, existing SS controls and ICs credited for other ASP Process Vessel Cell fire events are available to prevent and mitigate the consequences of ASP Process Vessel Cell fire with 500 gallons of solvent event. These SS controls include design of the Process Vessel Cells to be unoccupied for the life of the facility and entry controls for personnel entry, designation of the washing filters as SS to prevent the breakthrough of solids to the WWHT (TK-105), and grounding of all process vessels to prevent static sparks as a potential fire initiator. Additionally, the SS PBVS system and HEPA filters provide a means to filter the release prior to reaching the Onsite-2 receptor. These controls are considered adequate to prevent and mitigate an ASP Process Vessel Cell fire with 500 gallons of solvent. Therefore, no further SS controls are required by the ASP Process Vessel Cell Fire with 500 Gallons of CSSX Solvent BDBA and the event does not identify any vulnerability in the SWPF safety strategy.

### 3.5.2 Seismic Event with Mistransfers

The DBA for a Seismic Event at SWPF involves only the process streams that are not the result of mistransfers during operation. The seismic event analysis was limited to process streams that did not include mistransfer events due to the low likelihood of concurrent mistransfer events and a seismic event and also due to the fact that the total volume of high dose potential solids in the process streams is limited. Mistransfer events involve the transfer of high solids containing material to locations where the material does not normally occur. However, the solids cannot be in more than one location at any one time. Therefore, if the solids are incorrectly transferred to the wrong location, they cannot be present in the correct location simultaneously. Assuming that mistransfers could happen concurrently with a seismic event and ignoring the inability for the material to be present in multiple locations at the same time would result in higher calculated radiological consequences for a seismic event. Therefore, to ensure that no new safety related controls would result if mistransfer occurred coincident with a seismic event, it is postulated that a seismic event occurs at the same time the mistransfers have resulted in the high solids concentrations occurring in multiple process vessels as a BDBA to identify any potential vulnerability.

The potential radiological consequences to both the onsite receptor located at 100 meters from the release point (Onsite-2) and Offsite receptors of a seismic event with no mistransfers has been analyzed (S-CLC-J-00084[64]). The analysis documented in S-CLC-J-00084[64] was modified to address the potential for mistransfer events. This was done by changing the consequences of the individual events that are summed to determine the total consequences of a seismic event (spills, pressurized sprays, fires, and explosions) to the consequences for the individual events that are bounding in each case due to the presence of mistransferred solids. This process yielded estimates of the radiological consequences to the Offsite and Onsite-2 receptor of a seismic event concurrent with mistransfer of high solids containing material.

The modified analysis of the seismic event demonstrated that the radiological consequences to the Offsite receptor for the Seismic Event with Mistransfers are less than 1 rem. These consequences do not challenge the EG (25 rem). Therefore, no SC controls are required to protect the health and safety of the public from a Seismic Event with Mistransfers at the SWPF even if such events are assumed to be credible, which is not supported by the SB for the facility.

The analysis also demonstrated that the unmitigated radiological consequence to the Onsite-2 receptor for a Seismic Event with Mistransfer is approximately 457 rem. These consequences exceed the TOC for the Onsite-2 receptor. This implies that SS controls for the Seismic Event with Mistransfer event should at least be considered. However, existing SS controls and ICs credited for the Seismic Event discussed in Section 3.4.2.5 are available to mitigate the consequences of Seismic Event with Mistransfer. These SS controls include design of many of the process vessels and associated piping to PC-3 seismic design requirements, design of the CPA structure to PC-3 seismic design requirements, design Process Vessel Cells and CSSX Cells to be unoccupied for the life of the facility and entry controls for personnel entry, and design of the ADS to PC-3 seismic requirements to prevent explosions after a seismic. These controls and the others listed above are considered adequate to mitigate a Seismic Event with Mistransfer event. Therefore, no further SS controls are required by the Seismic Event with Mistransfer BDBA and the event does not identify any vulnerability in the SWPF safety strategy.

This page intentionally left blank.

## 3.6 Figures

None

This page intentionally left blank.

## 3.7 Tables

**Table 3.7-1. Hazard Analysis Source Information**

| Document Number | Document Title | Document Description | Relation to DSA Chapter 3 |
|---|---|---|---|
| V-PHR-J-0007 (6/28/18) | SWPF Hazards Analysis | This document describes the stand-alone Hazards Analysis done for SWPF over the last 6 months. This version of the SWPF HA (V-PHR-J-00007) will provided the input necessary to support the DSA, superseding the SWPF PHA done during the conceptual design and the HAZOPs conducted during the later design phases of the project. Derived controls are credited for a reduction in overall facility risk and are commensurate with the hazards present and complexity of the systems in association with the SWPF processes. The SWPF includes documented HI, HE, and QRA with derivation of controls. Several hazard and event screening steps were completed to provide discrimination for more important hazards, such that the evaluation is not overwhelmed by the sheer number of potential hazards to be examined and that the evaluation focuses on the requisite controls. | The HA evaluates the potential hazards of radiological and other hazardous materials in association with the SWPF operations, maintenance, and support structures to derive controls. The HA provides a systematic approach to identify hazards, evaluate hazards, and analyze control strategies to mitigate associated risks of the defined hazards of the process. The results of the SWPF HA (V-PHR-J-00007) are carried into the DSA Chapter 3. |
| S-CLC-J -00026 (10/16/12) | Assessment of Aircraft Crash Frequency for the Salt Waste Processing Facility (SWPF) | The purpose of this calculation note is to determine the annual frequency of an aircraft crash into the SWPF which could lead to a radiological release. The methodology of DOE-STD-3014-96 is employed in this calculation. Using the methods of DOE-STD-3014-96, the total frequency of an aircraft crash for the SWPF, all from non-airport operations requires a consequence analysis for aircraft crash. DOE-STD-3009-94, Change Notice No. 3[3], states that external events, such as aircraft crashes, are referred to as design basis accidents (DBA) and analyzed as such. | Determine the frequency of aircraft crashes as external events potentially impacting the SWPF. Numerical values used to validate qualitative estimates in the SWPF HA (V-PHR-J-00007[2]) HE tables for frequency. |

**Table 3.7-1. Hazard Analysis Source Information (cont.)**

| Document Number | Document Title | Document Description | Relation to DSA Chapter 3 |
|---|---|---|---|
| S-CLC-J-00027 (5/2/18) | Pulse Jet Mixer Air Jet Aerosolization Event Accident Analysis | The purpose of this calculation note is to determine the radiological consequences to the site worker and the offsite receptor of potential aerosolization events involving the pulse jet mixers used for agitation of tanks in the Salt Waste Processing Facility. For the pressure ranges analyzed, the unmitigated analysis determined none of the cases was the offsite receptor EG of 25 rem or the onsite receptor located 100 meters to the release point threshold of concern of 100 rem challenged. Because neither the EG or the threshold of concern is challenged, Safety Class or Safety Significant controls are not required. | Determine consequences of potential vessel aerosolization events in SWPF process vessels. Numerical values used to validate qualitative estimates in the SWPF HA (V-PHR-J-00007) HE tables for radiological consequences. |
| S-CLC-J-00028 (11/30/16) | HEPA Filter Radiological Loading for the Salt Waste Processing Facility (SWPF) (U) | The purpose of this calculation note is to determine maximum radiological loading on a HEPA filter and potential doses due to various accident stressors upon HEPA filters in the Salt Waste Processing Facility (SWPF). Maximum potential doses for potential accident stresses acting upon a single HEPA filter in the PVVS or the PMVS systems are calculated. For an entire PMVS filter train maximum potential doses are calculated. | Determine consequences of potential releases from HEPA filters from upset condition. Numerical values used to validate qualitative estimates in the SWPF HA (V-PHR-J-00007) HE tables for radiological consequences. |
| S-CLC-J-00029 (6/23/15) | Radionuclide Concentrations in Process Vessels | The purpose of this calculation is to determine the concentration of radionuclides in the process vessels based on the operation of the SWPF facility and postulated events. The objective of this calculation is to calculate the reasonably bounding radionuclide concentration and inventory in the SWPF process vessels and tanks for the identified process combinations. Another objective of this calculation is to provide reasonably bounding number of concentrated batches in FFT-A and FFT-B and the maximum expected solids Wt % for those batches. The calculation also examines the effect on radionuclide concentration in concentrated batches of solids present in the tank farm feed to SWPF and calculates Process Design inventories for comparison to The Safety Analysis inventories for each tank or vessel. The tank Radionuclide concentrations tor the SWPF process vessels and tanks for use in the Safety Analysis are provided. The Process Single Strike and Double Strike tank radionuclide concentrations for the SWPF process vessels and tanks are provided. | Support the subsequent calculation of consequences for spills, sprays, aerosolization, fire, explosion, and NPH events for SWPF. Numerical values used to validate qualitative values in the SWPF HA (V-PHR-J-00007) tank tables for radiological MAR. |

**Table 3.7-1. Hazard Analysis Source Information (cont.)**

| Document Number | Document Title | Document Description | Relation to DSA Chapter 3 |
|---|---|---|---|
| S-CLC-J-00030 (4/3/18) | Accident Analysis of Pressurized Leak Aerosolization Events | The purpose of this calculation note is to determine the radiological consequences to the site worker and the offsite receptor of potential aerosolization events involving pressurized liquid leaks from the process vessels of the Salt Waste Processing Facility. The radiological consequences do not constitute a significant challenge to the health and safety of the onsite worker or the offsite receptors. | Determine consequences of potential pressurized spray events in SWPF process vessels. Numerical values used to validate qualitative estimates in the SWPF HA (V-PHR-J-00007) HE tables for radiological consequences. |
| S-CLC-J-00031 (11/03/16) | Analysis of SWPF Chemical Consequences | The purpose of this calculation is to update the scoping calculations for use in the screening of chemicals used at SWPF. The chemical consequences of the CCA and the chemicals input into the process do not constitute a significant challenge to the health and safety of the onsite worker (OEP) or the offsite receptors (MOI). | Determine consequences of potential non-radiological release events in SWPF process vessels. Numerical values used to validate qualitative estimates in the SWPF HA (V-PHR-J-00007) HE tables for non-radiological consequences. |
| S-CLC-J-00033 (04/09/18) | Time to Reach the Composite Lower Flammability Calculation Functional Limit (CLFL) for SWPF Process Vessels | The purpose of this calculation note is to determine the generation rates of hydrogen and other flammable gases in the SWPF process vessels. The time to reach the composite lower flammability limit (CLFL) in each of the SWPF process vessels is also determined. The analysis determined that the time to reach CLFL varied from a few hours for some of the smaller vessels to as long as several hundred days for large vessels with low concentrations of radionuclides. In general, the time to CLFL is most sensitive to the radiolytic aqueous hydrogen generation rate. The solvent contributes less to the time to CLFL primarily due to the limited volume of solvent in the process vessels. However, the solvent itself can result in the vapor space being at approximately 13% of CLFL due to the vapor pressure of the solvent. Heat up of the process vessels due to external recirculation pumps was also determined to have a significant impact on the time to CLFL. For the vessels with large external recirculation pumps (SSRT, FFT-A, and FFT-B), continued operation of the pumps can result in the vessel temperature exceeding the flash point of the solvent. | Support the subsequent calculation of consequences for potential SWPF fire events. |

**Table 3.7-1. Hazard Analysis Source Information (cont.)**

| Document Number | Document Title | Document Description | Relation to DSA Chapter 3 |
|---|---|---|---|
| S-CLC-J-00038 (5/10/17) | Accident Analysis of Spill Events | The purpose of this calculation note is to determine the radiological consequences to the site worker and the offsite receptor of spill events from the process vessels of the Salt Waste Processing Facility. The radiological consequences do not constitute a significant challenge to the health and safety of the onsite worker or the offsite receptors. | Determine consequences of potential radiological spill events in SWPF process vessels. Numerical values used to validate qualitative estimates in the SWPF HA (V-PHR-J-00007) HE tables for radiological consequences. |
| S-CLC-J-00041 (05/02/18) | SWPF Fire Radiological Consequence Analysis | The purpose of this calculation is to determine radiological consequences for solvent fire release events in the SWPF. Unmitigated fire events are evaluated for each of the large process vessels for in-vessel and cell fires independent of frequency of the event or whether the conditions for a sustained solvent fire are present. CSSX area fires are evaluated in Tank Cells and CSSX malfunctions are considered. Because of the Process Cell design, the conditions for a sustained Solvent fire are not present in the Process Cells. | Determine consequences of potential radiological fire events in SWPF process vessels. Numerical values used to validate qualitative estimates in the SWPF HA (V-PHR-J-00007) HE tables for radiological consequences. |
| S-CLC-J-00042 (03/30/18) | Process Vessel Air Purge Flowrates | The purpose of this calculation note is to determine the air purge flow rates required to prevent reaching the composite lower flammability limit (CLFL) in each of the SWPF process vessels. The minimum required air purge flow rates to prevent reaching flammable conditions in 10 days in the SWPF process vessel vapor spaces are determined. The analysis determined that depending on the initial conditions the required air purge flow rates CLFL varied. In general, the air purge flow rate is most sensitive to the radiolytic aqueous hydrogen generation rate. The solvent contributes less to the required air purge flow rate primarily due to the limited volume of solvent in the vessels. | Support the subsequent calculation of consequences for potential SWPF fire and explosion events. |
| S -CLC-J-00043 (01/04/16) | Waste Transfer Enclosure Flammability Analysis (U) | The purpose of this calculation is to determine the maximum amount of waste that can spill into the Waste Transfer Enclosure (WTE) and still allow at least 10 days for response to be taken. | Support the subsequent calculation of consequences for potential SWPF fire events in the WTE. |

**Table 3.7-1. Hazard Analysis Source Information (cont.)**

| Document Number | Document Title | Document Description | Relation to DSA Chapter 3 |
|---|---|---|---|
| S-CLC-J-00054 (04/09/18) | Accident Analysis of Explosive Events | The purpose of this calculation note is to determine the radiological consequences to the site worker and the offsite receptor of explosion events in the process vessels of the Salt Waste Processing Facility. The radiological consequences to both the maximally-exposed offsite individual (MOI) and the onsite evaluation point (OEP) located at 100 meters from the release point from accidents involving explosions in process vessels at the SWPF facility are conservatively determined. | Determine consequences of potential explosive events in SWPF process vessels. Numerical values used to validate qualitative estimates in the SWPF HA (V-PHR-J-00007) HE tables for radiological consequences. |
| S-CLC-J -00063 (9/27/12) | Assessment of Aircraft Impact and Penetration for the Salt Waste Processing Facility (SWPF) | This study estimates the potential for facility structural failure and release of radioactive materials resulting from an aircraft crash into the Salt Waste Processing Facility (SWPF). DOE-STD-3014-96, *Accident Analysis for Aircraft Crash into Hazardous Facilities,* provides a multi-step approach for assessing the significance of an aircraft crash risk to facility safety. | Validate the consequences of aircraft crashes as external events potentially impacting the SWPF. |
| S-CLC-J-00064 (05/05/17) | Aircraft Crash Consequence Analysis for SWPF | The purpose of this calculation is to determine the radiological consequences resulting from credible aircraft crashes in the SWPF. The offsite doses are calculated for aircraft crashes in the AFF and CPA. | Validate the consequences of aircraft crashes as external events potentially impacting the SWPF. Numerical values used to validate qualitative estimates in the SWPF HA (V-PHR-J-00007) HE tables for consequence. |
| S-CLC-J-00084 (5/17/17) | Radiological Consequences of a Seismic Event at SWPF | The purpose of this calculation is to determine the radiological consequences to the onsite and offsite receptors of a seismic event impacting the Salt Waste Processing Facility (SWPF). The unmitigated radiological consequences to the offsite receptor and to the onsite receptor located 100 meters from the release for a seismic event impacting the Process Building and AFF of the SWPF and the SWPF as a whole are determined. | Determine consequences of potential seismic events in SWPF process vessels. Numerical values used to validate qualitative estimates in the SWPF HA (V-PHR-J-00007) HE tables for radiological consequences. |

**Table 3.7-1. Hazard Analysis Source Information (cont.)**

| Document Number | Document Title | Document Description | Relation to DSA Chapter 3 |
|---|---|---|---|
| S-CLC-J-00134 (6/21/09) | Required Fill Fractions to Reach LFL and LEL in SWPF ASP Process Cell Piping Segments | The purpose of this calculation is to calculate the fill fraction of an isolated piping Section which will generate sufficient hydrogen to exceed either the Lower Flammability Limit (LFL) or the Lower Explosive Limit (LEL) within 30 days for the waste streams in the ASP process cells. | Validate non-credible event for piping DDT within 10 day period. Used to determine credibility of events for SWPF HA (V-PHR-J-00007) HE tables. |
| S-CLC-J-00137 (4/7/11) | Pipe Length Required to Support Explosions With Significant Consequences | The purpose of this calculation note is to determine the length of piping of various size that is necessary to hold sufficient radiolytically generated hydrogen and solvent vapor to result in an explosion that would exceed the Threshold of Concern for the onsite receptor located 100 meters from the release point. Based on the pipe lengths necessary to support an explosion whose consequences exceed the TOC, there are no cases where an isolated Section of piping of any size at SWPF has sufficient length to require safety-related (Safety Significant) controls to prevent or mitigate an explosion in the pipe segment. | Validate non-credible event for piping DDT within 10 day explosions. Used to determine credibility of events for SWPF HA (V-PHR-J-00007) HE tables. |
| S-CLC-J-00136 (10/30/09) | SWPF MACCS2 Values | The purpose of this calculation note is to determine modeling values for both the onsite and offsite receptors of ground-level release. | Support the subsequent calculation of consequences for potential radiological release events. |
| S-CLC-J-00141 (04/04/14) | As Built Tank and Vessel Volumes for Safety Analyses | The purpose of this calculation is to compare the critical tank parameters used in the Tank Sizing Calculations with the tank as-built parameters to determine the as-built liquid and vapor space volumes with the liquid level at the overflow. | Provided tank sizes/volumes in support of tank calculations. Numerical values used to validate tank volumes in SWPF HA tank tables. |
| S-EIP-J-00004, Rev 3 (5/14/09) | Final Design ALARA Review Report | This document presents the facility (specific area) dose rate estimates and the projected cumulative personnel exposures associated with operation and maintenance of this facility on an annual average and for the plant operational period expectancy (20 years). Tasks associated with routine operations and maintenance along with repairs for predicted equipment failure have been analyzed, with particular emphasis placed on evolutions that require personnel to work in areas where radiation exposure levels are expected to be above background. | Provides facility worker exposure estimates during normal operations and maintenance activities. Numerical values used to validate worker consequences in SWPF HA (V-PHR-J-00007) HE tables. |

**Table 3.7-1. Hazard Analysis Source Information (cont.)**

| Document Number | Document Title | Document Description | Relation to DSA Chapter 3 |
|---|---|---|---|
| P-DB-J-00003[15] | SWPF Process Basis of Design | This document describes the design basis for process systems in the Salt Waste Processing Facility (SWPF). | Document utilized to determine process nodes for hazards analysis. |
| P-DB-J-00004[16] | SWPF Balance of Plant Basis of Design | The purpose of this document is to describe the design basis and specify the design requirements and design codes and standards to be used in development of the Salt Waste Processing Facility (SWPF). | Document utilized to determine process nodes for hazards analysis. |
| P-SYD-J-00001[19] | SWPF Sequence of Operations | This document describes the major processing operations performed by the Salt Waste Processing Facility (SWPF). | Document utilized to determine process nodes for hazards analysis. |
| M-M5-J-0001[20] | SWPF Simplified Process Flow Schematic | This process flow diagram (PFD) shows the simplified process flow for the SWPF three (3) processes. | Document utilized to determine process nodes for hazards analysis. |

**Table 3.7-2. SWPF Node Description**

| Node | Facility/Process Area | Descriptions |
|---|---|---|
| 1. | Central Processing Area | Reinforced concrete construction of the CPA base mat, floors, walls, and ceilings meets Performance Category (PC) -3 structural requirements and houses the ASP, CSSX, and process sampling operations in shielded confinement cells and labyrinths. |
| 1.1. | Alpha Strike | The ASP is performed in five process cells located in the CPA. The ground floor of the large cells is at the 100' Level with the ceiling of the large cells at the 124' Level.<br>• The AST-A Process Cell contains the AST-A (TK-101) and receives the batch transfers from the H-Area Tank Farm. MST addition to the AST-A (TK-101) and agitation of the AST-A (TK-101) contents occurs in this process vessel cell.<br>• The FFT-A Process Cell contains the FFT-A (TK-102) and receives transfers from the AST-A (TK-101). The waste in the FFT-A (TK-102) is concentrated by circulation through CFFs.<br>• ASDT (TK-601) Process Cell contains the ASDT (TK-601), Solvent Drain Tank (TK-208), SAST (TK-127), and Lab Drain Tank (TK-235). The ASDT (TK-601) collects liquid from various drains in equipment associated with the ASP process. The Solvent Drain Tank (TK-208) collects liquid from any spills and leaks that may occur in process streams that contain no MST and are likely to contain CSSX solvent. The SAST (TK-127) receives spent acid solutions from CFF cleaning operations. The Lab Drain Tank (TK-235) collects the liquid from the drains in the Analytical Laboratory Hot Cells and gloveboxes. The ASDT process cell also contains the Alpha Sorption Filters, the CFFs through which the liquid in the FFT-A (TK-102) is circulated to increase the MST/sludge solids concentration.<br>• SSRT/WWHT Process Cell contains the SSRT (TK-104), WWHT (TK-105), and CSDT-A (TK-103). The SSRT (TK-104) receives the concentrated MST/sludge solids from the FFT-A (TK-102). The WWHT (TK-105) holds process water used to wash the contents of the SSRT (TK-104) to lower the concentration of sodium ions. The CSDT-A (TK-103) contains filter cleaning chemicals (caustic or acid). The SSRT/WWHT process cell also contains the washing filter through which the contents of the SSRT (TK-104) are circulated to reduce the Na concentration of the concentrated MST/sludge solids by dilution.<br>• SSFT Process Cell contains the SSFT (TK-109). The SSFT (TK-109) receives the filtrate from the Alpha Sorption filters and serves as the feed tank for the CSSX process.<br>• The Waste Transfer Enclosure (WTE) is located adjacent to the SSFT Cell with a common opening between.<br>Additional ASP support equipment is in the North ASP P&VG and the South ASP P&VG in Node 1.4. |

**Table 3.7-2. SWPF Node Description (cont.)**

| Node | Facility/Process Area | Descriptions |
|---|---|---|
| 1.2. | CSSX | The CSSX process is performed in three functional areas located on the south side.<br>• The first functional area (@ 100' Level) has the CSSX P&VG contains the interconnecting piping, isolation valves and pumps for the CSSX process and strip effluent transfers to the DWPF. A hoist is located in the area. Sample Pump and Valve Labyrinth contains sample pumps that provide a sample waste stream to samplers located in the Laboratory.<br>• The second functional area (@ 116' Level) is a bi-level cell that contains the CSSX centrifugal contactors. The Contactor Operating Deck (@ 124') is where the individual contactors can be maintained/changed out. A hoist is located in the area.<br>• The third functional area (@ 100' & 116' Level) contains two tank cells, the East and West CSSX Tank Cells, which contain the CSSX process vessels and support equipment.<br>The East CSSX Tank Cell contains vessels that support the strip contactor operations. These vessels include the Solvent Strip Feed Tank (TK-217), the Strip Effluent Pump Tank (TK-215), the Strip Effluent Stilling Tank (TK-212), and the Strip Effluent Coalescer (TK-203).<br>The West CSSX Tank Cell contains vessels that handle the DSS waste stream, caustic washing and solvent feed to the extraction contactors. These vessels include the Solvent Hold Tank (TK-202), CWT (TK-204), Barium Decay Tank (BDT) (TK-206), and DSS Stilling Tank (TK-211)<br>The SEHT Process Cell contains the SEHT (TK-205). The SEHT (TK-205) receives strip effluent from the CSSX Contactors.<br>The DSS Coalescer (TK-201) is located on a maintenance access platform near the Contactor Drop Area (@ 124' Level).<br>Additional CSSX support equipment is in the CSSX Labyrinths in Node 1.4. |

**Table 3.7-2. SWPF Node Description (cont.)**

| Node | Facility/Process Area | Descriptions |
|---|---|---|
| 1.3. | Analytical Laboratories | The analytical laboratories are located above the process cells at the 139' Level. Pumps deliver the process samples from the various vessels to the either the hot cell or glove boxes.<br>The analytical laboratories are used to determine actinide and Cs concentrations, MST concentrations/utilization, and other miscellaneous testing. Analytical laboratories have a common hallway with ingress/egress doors as well as doors connecting each of the different areas. The analytical laboratories have flammable cabinet(s) located where appropriate. The hot cell area is immediately adjacent to the analytical laboratories.<br>From west to east, the area is comprised of the Hot Laboratory, Radiochemistry Laboratory, Inorganic Laboratory, Organic Laboratory, as well as a laboratory count room, storage areas, and Laboratory Office area.<br>Within the Hot Laboratory are four Hot Cells, within one common shielded enclosure, containing a bridge crane and manipulators. On the south side of the Hot Laboratory are Manipulator Decon and Repair rooms to perform maintenance on manipulators used in the Hot Cells. Routine Hot Cell maintenance is planned to be performed remotely to the extent practical, with a means for Hot Cell entry after draining, flushing, and decontaminating the equipment in the Hot Cells to allow for maintenance of items such as the Hot Cell bridge crane. Entry is accomplished through the Hot Cell large pass-through.<br>• Within the Radiochemistry Laboratory are nine gloveboxes, one of which can transfer items to/from the Hot Cells and six radio hoods.<br>• Within the Inorganic Laboratory are two gloveboxes and five radio hoods.<br>• Within the Organic Laboratory are six radio hoods.<br>A sample transfer system is provided within another glovebox to transfer samples between laboratories. |
| 1.4. | Labyrinths | The North ASP P&VG contains the interconnecting piping, isolation valves, and pumps for the ASP and MST/sludge transfers to DWPF.<br>The South ASP P&VG contains the transfer pumps for the WWHT (TK-105), Solvent Drain Tank (TK-208), SAST (TK-127), and ASDT (TK-601) vessels.<br>The CSSX Labyrinth #1 contains the transfer pumps for the CSS feed to the contactors. The CSSX Labyrinth #2 contains the transfer pumps used to transfer strip effluent to DWPF. The CSSX Labyrinth #3/#4 contain the heat exchanger to cool solvent feed to the extraction contactors, solvent feed pump, caustic wash tank pump, and BDT Pump. The CSSX Labyrinth #5/#6 contain the heat exchanger to the Solvent Strip Feed, strip effluent pump, solvent strip feed pump, and CSSX Tank Cell Sump Transfer Pump.<br>The Sample Pump and Valve Labyrinth contains the pumps to pull samples from the ASP process vessels to the Lab Hot Cell. The P&VG and labyrinths are located at the 100' Level. |

**Table 3.7-2. SWPF Node Description (cont.)**

| Node | Facility/Process Area | Descriptions |
|---|---|---|
| 1.5. | CPA Support Areas | The CPA Support Areas include CPA Support Areas include equipment at the 100', 116', 124', and 139' Levels.<br>At the 100' Level, support rooms include the Drum Off/Decon Area, Waste Storage Area, Contactor Rebuild Area, and Material Staging & Storage Area with the Alpha Strike Filter Drop Area.<br>At the 116' Level, support rooms include Process Building HEPA Filter Room, Process Building Exhaust Fan Room, CSSX Contactor Staging Area, CSSX Contactor Drop Area, South Chase (South Utility Chase & Contactor Support Floor), and Cell Inlet HEPA Filter Room. The Waste Transfer Access Room, Clean HEPA Filter Storage Room, and Contactor VFD Room are also located at the 116' Level.<br>At the 124' Level, support rooms include the Spare Contactor Storage Area Maintenance Access Platform.<br>At the 139' Level, support rooms include the Laboratory Hot Cell Exhaust Room, Cell Inlet HEPA Filter Room, PVVS/PMVS and Laboratory Vent Room, PVVS/PMVS HEPA Filter Staging Area, PVVS/PMVS Fan Room, and the Operating Deck. The West Utility Chase spans the 124' and 139' areas.<br>The Operating Deck has the Filter Drop Area Plugs, Pulse Mixer Enclosures, Filter Vent Relief and Blow Down Enclosure, and Filter Access Plugs. A large crane is located above the Operating Deck. |
| 2. | Alpha Finishing Facility | The AFF adjoins the south wall of the SWPF and contains the radiological AFP to further process Cs-depleted CSS that has reduced Cs/Sr concentrations. The AFF is a large process area divided into three diked areas and two adjacent rooms for support equipment. A large crane is available. The AFF ground floor is at the 100' Level.<br>The AFP provides the option of performing an additional (second) MST strike, mixing, and filtration of Cs-depleted CSS exiting the CSSX process. Two activities/products are complete in the AFP – AFP Sorption and AFP Filtration.<br>The AFF is constructed with fabricated roofing (i.e., thermoplastic roof membrane over rigid insulation adhered to metal decking) and siding supported by structural steel on shallow foundations to meet PC-1 structural requirements. The foundations and superstructure for the AFF are structurally decoupled from the CPA. The steel structural members of the AFF are supported to PC-3 seismic standards to prevent failure of the structure from damaging the CPA.<br>Mezzanines on top of process tanks allow access to agitators and level transmitters as elevated work areas. HEPA filters located in mezzanine. |
| 2.1. | MST | [AFP Sorption] The AFP produces a concentrated MST/sludge containing Actinides and Sr-90, which is usually sent to the SSRT (TK-104) for washing and subsequent transfer externally (via underground pipeline) to the DWPF. If the AFP MST sorption capacity is not totally depleted, this MST can be recycled to back into AST-A (TK101) for reuse within the ASP.<br>The AFF process vessels are located within one of two separate diked tank areas. The (first) western dike area contains the IST (TK-220), AST-B (TK-221), and associated pumps. AST-B (TK-221) has a cooling jacket. |

**Table 3.7-2. SWPF Node Description (cont.)**

| Node | Facility/Process Area | Descriptions |
|---|---|---|
| 2.2. | Filter | [AFP Filtration] The AFP produces DSS filtrate that is transferred externally (via underground pipeline) to the SPF.<br>The (second) eastern diked area contains the DSSHT (TK-207), FFT-B (TK-222), CSDT-B (TK-223), MSTT (TK-224), the CFFs, two laboratory waste collection tanks, and associated pumps. The AFDT (TK-228) is in a depressed area of the eastern diked areas. |
| 2.3. | Support | The AFF Support Areas include the AFF Operator Room, AFF Electrical Room, AFF AHU Room, & AFF HEPA Filter Room as well as the external AFF Exhaust Fan Pad. |
| 3. | Cold Chemicals Facility | Consists of a large room to house process support equipment including tanks, pumps, and supporting equipment as well as piping that store and transfer bulk acids, caustics, Process Water, DI water, and MST. Tanks containing caustic, acid, and solvent are segregated within diked areas. Support areas included in the CCA include the CCA Receiving Dock, CCA Laboratory, CCA Operator Station, CCA AHU Room, and CCA Electrical Room. CCA is sprinklered as a separate fire control area. The CCA ground floor is located at the 100' level. |
| 3.1. | Bulk Storage | Bulk chemicals include (filter cleaning) acid, MST, $HNO_3$, NaOH (caustic), NaOCl, and solvent. CCA Tanks are located in the CCA Solvent Area, Filter Cleaning Acid Area, CCA Caustic Area, Neutralization Tank Area, CCA Nitric Acid Area, and Process/Deionized Water Area. The CCA shares a wall with the "dark cells." CCA is sprinklered as a separate fire control area. |
| 3.2. | Support Areas | Support areas included in the CCA include the CCA Laboratory, CCA Operator Station, CCA AHU Room, and CCA Electrical Room. Flammable cabinet(s) are located in the laboratory. CCA is sprinklered as a separate fire control area. |
| 3.3. | Receiving Dock | Receiving dock area provides for bulk chemical deliveries to support area. |
| 4. | FSA | Personnel work spaces and secondary support systems are primarily housed in the FSA. The FSA is a single story at the 100' level. |
| 4.1. | East | The Eastern FSA adjoins the Northern FSA and the CPA. This area includes the main personnel entrance to the SWPF, a DOE Office, five other offices, Work Release Office, a general storage room, Health Physics Offices, Ready Room, and Count Area, Personnel Decon Room, General Maintenance Shop, Rad Tool Storage Room, Clean Tool Storage Room, spare parts storage, and a waste storage room.<br>On the eastern-most end of the FSA is a Truck Bay that has a direct path into the CPA's Material Staging and Storage Area via the Equipment Corridor. The south end of the Eastern FSA includes an Equipment Corridor, various maintenance and calibration shops and offices, and the Fire Protection Valve Room. |

**Table 3.7-2. SWPF Node Description (cont.)**

| Node | Facility/Process Area | Descriptions |
|---|---|---|
| 4.2. | North | The Northern FSA is located north of the CPA structure and is separated by an east-west corridor. From west to east, the Northern FSA includes: the Electrical Room that houses 480-V alternating current switchgear, motor control centers, Instrument Panels, and some automatic transfer switches.<br>Adjacent to the Electrical Room on the southwest corner is a Fire Protection Valve Room that is accessed from a west wall facility entrance. On the east side of the Electrical Room is a Mechanical Room that houses AHUs for the PBVS and CR Ventilation System, Chilled Water Pumps, and Heat Recovery Pumps.<br>Adjacent to the Mechanical Room are the Break Room, Toilet/Locker Rooms, Janitorial Closet, and Clean Personal Protective Equipment Storage. |
| 5. | Facility Systems | General plant systems located throughout the SWPF at various levels include: PASs, ADS, HVAC System, PVVS (w/ HEPA), PMVS (w/ HEPA), Plant Water System, Plant Electrical System, Fire Protection System, and DCS.<br>This Node is evaluated for impact from potential system failures. |
| 6. | External Facility Support Areas | This area is external to the SWPF, but within the SWPF fence line with the below primary equipment. |
| 6.1. | North | Operational areas outside the SWPF process building that include the Disconnect Switch Pad, Chiller Pad, Parking Lot (Main), Transformer Pad 252, Pedestrian Gate and Vehicle Gate |
| 6.2. | East | Operational areas outside the SWPF process building that include the Administrative Building, Exhaust Stack, Admin Transformer Pad, and Admin HVAC Pad |
| 6.3. | South | Operational areas outside the SWPF process building that include the AFF Exhaust, Fan Pad, Detention Basin/Spillway, Cathodic Protection Control Box, Cold Chemical Truck Pad and HVAC Pad 2 |
| 6.4. | West | Operational areas outside the SWPF process building that include the Compressor Building, Liquid Argon Tank Pad, Deionized Water, Generator/Switch Gear/Fuel Pad and Transformer Pad 272 |
| 7. | Nearby Facilities/Areas | The nearby facilities may have an impact on SWPF operations with a potential for physical impact, chemical, and/or radiological impacts. |
| 7.1. | Nearby SWPF | Nearby areas approximate to the SWPF include the Storm Water Outfall, Storm Water Pond, Railroad Track, and Roadways.<br>The Storm Water Outfall and Storm Water Pond areas area located below grade of the SWPF with further drainage capability to the surrounding lower lying areas.<br>There is an underground transfer line for radioactive liquid waste marked with radiological postings located on the far side of the pond.<br>The Railroad Track is located below grade of the SWPF and is no longer utilized.<br>The nearby roadways to the SWPF are unpaved, gravel roads that provide for traffic leaving the South Gate of the SWPF. |
| 7.2. | Nearby SRS | Actinide Removal Process Facility (Building 512-S), DWPF, E-Area, Effluent Treatment Project, Equipment Laydown Yards, F-Area Tank Farm, H-Area Canyon, H-Area Tank Farm, Modular Caustic Side Solvent Extraction Unit (MCU) Facility, Radiological Contamination Sites, SPF, and Tritium Facility |

**Table 3.7-3. Standard Industrial Hazard Screening Criteria**

| Hazard | Screening Criteria | Reference |
|---|---|---|
| Airborne Objects/Fragments | • Any impact beyond 100m of facility boundary | • DOE-STD-1212-2012, *Explosives Safety* |
| Biological | • > BSL-2 | • HHS Publication No. (CDC) 21-1112, 5th *Edition, Biosafety in Microbiological and Biomedical Laboratories* |
| Chemicals<br>• Asbestos<br>• Asphyxiate<br>• Beryllium<br>• Corrosive<br>• Cryogen<br>• Combustible<br>• Flammable<br>• Lead<br>• Materials of Trade<br>• Metal Powder<br>• Nanomaterial<br>• Oxidizers<br>• Peroxide/Peroxidizable<br>• Pyrophoric<br>• Silica<br>• Toxic | General:<br>• Common Household Chemicals/Materials of Trade<br>• NFPA Health Rating > 1<br>• > Lab-scale Quantities:<br>– 5-gal (l)<br>– 40-lbs (s)<br>– 10-lbs (g)<br>• Toxics:<br>– NFPA Health > 2<br>Quantity per Control Area:<br>• Any Friable Asbestos<br>• Asphyxiate: 150-scf<br>• Any Beryllium<br>• Corrosives: 15,000-lb solid; 1,500-lb liquid; 2,430-scf gas<br>• Cryogens: 67.5-gal liquid<br>• Combustibles (liquid):<br>– II: 360-gal<br>– III A: 990-gal<br>– III B: 39,600-gal<br>• Flammables:<br>– Gas: 3,000-scf<br>– Liquid (I ABC): 360-gal<br>– Solid: 375-lbs<br>• Any Lead<br>• > 10 grams Metal Powder<br>• Any Unbound NanoParticles<br>• Oxidizers (by Class):<br>– 4: 1.5-lbs (s) / 3-lbs (l)<br>– 3: 30-lbs<br>– 2: 750-lbs<br>– 1: 12,000-lbs<br>• Peroxides (by Class):<br>– I: 15-lbs | • DOE STD 3009-2014, *Preparation of Nonreactor Nuclear Facility Documented Safety Analysis*<br>• DOE STD 3009-1994 Change No. 3, *Preparation of Nonreactor Nuclear Facility Documented Safety Analysis*<br>• National Fire Protection Agency (NFPA) 704, *Standard System for the Identification of the Hazards of Materials for Emergency Response*<br>• 2003 International Fire Code*<br>• 2005-149, *National Institute for Occupational Safety and Health (NIOSH) Pocket Guide*<br>• American Conference of Governmental Industrial Hygienists (ACGIH), *Threshold Limit Values (TLV) & Biological Exposure Indices (BEI) Guide*<br>• National Oceanic and Atmospheric Administration (NOAA), *Emergency Response Planning Guidelines*<br>• 29 CFR 1910.119, *Process Safety Management of Highly Hazardous Chemicals*<br>• 29 CFR 1910.1001, ***Asbestos***<br>• 29 CFR 1910.1024, *Beryllium*<br>• 29 CFR 1910.1025, *Lead*<br>• 29 CFR 1910.1053, *Respirable Crystalline Silica* |

**Table 3.7-3. Standard Industrial Hazard Screening Criteria (cont.)**

| Hazard | Screening Criteria | Reference |
|---|---|---|
| | – II: 150-lbs<br>– III: 375-lbs<br>– IV/V: Not Limited<br>• Pyrophorics: 12-lbs solid/liquid; 150-scf (g) | |
| Chemical Reactions/ Incompatibility | • > 10-lb of a substance with an NFPA reactivity hazard level > 2<br>• Exothermic Reactions<br>• Toxic Off-Gassing | • NOAA, EPA-600/2-80-076 *Chemical Reactivity Worksheet*<br>• Environmental Protection Agency, *Chemical Compatibility Matrix* |
| Confined Space | • Permit-Required Confined Space | • ANSI/ASSE Z117.1 - 2009, *Safety Requirements for Confined Spaces*<br>• NFPA 350, *Guide for Safe Confined Space Entry and Work*<br>• 29 CFR 1910.146, *Permit-Required Confined Space* |
| Combustible Materials (non-chemical) | • Materials in excess of NFPA 801 requirements | • NFPA 801, *Fire Protection for Facilities Handling Radioactive Materials. 2003 Edition.* |
| Electrical | • Unusual application not adequately controlled by OSHA<br>• Potentially Initiating Event | • NFPA 70E, *Standard for Electrical Safety in the Workplace* |
| Explosives | • Any 49 CFR 173 Division 1.1, 1.2, or 1.3; or > 10 oz of Division 1.4<br>• > 0.25 psi impact beyond 100m of facility boundary | • 49 CFR 173, *Shippers – General Requirements for Shipments and Packagings*<br>• DOE-STD-1212-2012, *Explosives Safety* |
| Hot Work/Open Flame | • Welding, cutting, and/or brazing in the presence of any other hazard | • 29 CRF 1910.252, *Welding, Cutting, and Brazing* |
| Internal Flooding | • Potential Initiating Event | • N/A |
| Lasers | • Any Class IV, any Class III with non-enclosed beam | • ANSI Z136.1, Section 7, 2007, *ANSI Standard for the Safe Use of Lasers* |
| Mechanical | • Noncommercial Mechanical Equipment | • 2003 International Mechanical Code<br>• 29 CFR 1910 Subpart O, *Machinery and Machine Guarding* |
| Noise | • > 85 dBA | • 29 CFR 1910.95, *Occupational Noise Exposure* |
| Noncommercial | • Any noncommercial equipment | • N/A |
| Outside Manufacturers | • Any equipment used outside | • N/A |

**Table 3.7-3. Standard Industrial Hazard Screening Criteria (cont.)**

| Hazard | Screening Criteria | Reference |
|---|---|---|
| Recommendations | of manufacturers recommendations | |
| Physical Impact<br>• Kinetic Energy<br>• Potential Energy<br>• Overhead Cranes<br>• Rollup Doors | • High energy (e.g., flywheel or centrifuge-type equipment)<br>• Impact resulting in dispersion or release of <u>any</u> other hazard | • 29 CFR 1910 Subpart O, *Machinery and Machine Guarding*<br>• 29 CFR 1910.147, *Control of Hazardous Energy*<br>• 29 CRF 1910.179, *Overhead and Gantry Cranes* |
| Pressure | • 3,000 psig or 0.1 lb TNT (1.4 x 105 ft-lb) equivalent energy<br>• Pressure release resulting in dispersion or release of <u>any</u> other hazard | • 29 CFR 1910 Subpart M, *Compressed Gas and Compressed Air Equipment*<br>• 29 CFR 1910.101, *Compressed Gases*<br>• 29 CFR 1910.169, *Compressed Gas and Compressed Air Equipment*<br>• ANSI/ B 31.1, *Power Piping*<br>• ASME, *Pressure Piping* |
| Process Stream | • > 55-gal single container | • 2003 International Fire Code* |
| Radiation/Radiological<br>• Fissile/Fissionable Material<br>• Ionizing Radiation<br>• Nonionizing Radiation<br>• Radiation Generating Device<br>• Surface Contamination | • Any radioisotope meeting or exceeding the Table A1, DOE-STD-1027-92 TQ criteria;<br>• Exceeding the Appendix B, 40 CFR 302 RQ criteria. The inventory/RQ or Inventory/TQ ratios should be added when making this evaluation.<br>• >0.002µCi per gram of waste<br>• Fissile/Fissionable Material:<br>– > ANSI/ANS-8.1-1998<br>– > ANSI/ANS-8.15-1981<br>• Ionizing Radiation<br>– Posted Radiological Area<br>• Nonionizing Radiation:<br>– Static Magnetic Fields: > 2T<br>– Sub-radiofrequency Magnetic Fields: > 30 kHz<br>– Electromagnetic Field**: 16.3 MHz<br>• Radiation Generating Device: Non-Exempt Accelerators | • ANSI/ANS-8.1-1998, *Nuclear Criticality Safety in Operations with Fissionable Materials Outside Reactors*<br>• ANSI/ANS -8.15-1981, *Nuclear Criticality Control of Special Actinide Elements*<br>• 10 CFR 830, *Nuclear Safety Management*<br>• 10 CFR 835, *Occupational Radiation Protection*<br>• ACGIH, *TLV & BEI Guide*<br>• DOE O 420.2C, *Safety of Accelerator Facilities*<br>• DOE-STD-1027-92, *Hazard Categorization for Accident Analysis Techniques for Compliance with DOE Order 5480.23, Nuclear Safety Analysis Reports*<br>• NA-1 SD G 1027, *Guidance on Using Release Fraction and Modern Dosimetric Information Consistently with DOE STD 1027-92, Hazard Categorization and Accident Analysis Techniques for Compliance with DOE Order 5480.23, Nuclear Safety Analysis* |

**Table 3.7-3. Standard Industrial Hazard Screening Criteria (cont.)**

| Hazard | Screening Criteria | Reference |
|---|---|---|
| | • Surface contamination measurements of fixed, removable, or both exceed values in 10 CFR835 | *Reports, Change Notice No. 1*<br>• 40 CFR 302, *Designation, Reportable Quantities, and Notification* |
| Thermal (not fire) | • > 75% Isopar L Flashpoint (> 108°F) | • NFPA 204, *Standard For Smoke And Heat Venting*<br>• Safety Data Sheet, *Isopar L* |
| Vehicles | • Special and/or nonstandard DOT activities | • OSHA Motor Vehicle Safety Guidance, *Motor Vehicle Safety* Guidance<br>• NIOSH, *Motor Vehicle Safety at Work* |

*MAQ per Control Area determined by 2003 IFC Table 2703.1.1(1) & 2703.1.1(2); assuming 100% quantity increase for approved automatic sprinkler system (Table 2703.1.1(1) footnote d & 2703.1.1(2) footnote e) and 100% quantity increase for approved storage (Table 2703.1.1(1) footnote e & 2703.1.1(2) footnote f) as applicable. Per Table 2703.8.8.2, MAQ limited to 75% of allowable MAQ from 2003 IFC Table 2703.1.1(1) & 2703.1.1(2) based on location of laboratory on floor level 2.

**Electromagnetic Field TLVs are dependent on frequency; frequency-dependent screening criteria can be found in Table 1 of the Electromagnetic Radiation and Fields section of the ACGIH TLV & BEI Guide.

s – solid; l – liquid; g – gas

**Table 3.7-4. Receptors by Location**

| Receptor | Abbreviation | AA Nomenclature | Definition |
|---|---|---|---|
| **Worker** | W | Onsite-1 | Workers inside the facility. This category of receptors includes Workers near the hazard. The receptor is commonly referred to as the Onsite Worker 1. |
| **Collocated Worker** | CW | Onsite-2 | Workers outside the facility, but within the SRS boundary. For evaluation purposes, these Workers are located outside the last possible barrier from the hazard and at the worst possible location. Consequence levels are assigned by qualitatively evaluating the dose outside the last possible barrier from the hazard, using simple dose calculations at 100 meters. The receptor is commonly referred to as Onsite Worker 2 or Adjacent Facility Worker. |
| **Public** | P | Offsite or MOI | The Public or everyone outside the SRS boundary. This receptor is commonly referred to as the Maximally-exposed Offsite Individual. |

**Table 3.7-5. Qualitative Consequence Matrix**

| Abbrev. | Consequence Severity | Hazard | Public | Collocated Worker | Worker |
|---|---|---|---|---|---|
| **H** | **High** | **Other Hazards** | Less than life-threatening effects. | Prompt Worker fatality or acute injury that is immediately life-threatening or permanently disabling | Prompt Worker fatality or acute injury that is immediately life-threatening or permanently disabling |
| | | **Radiological** | C ≥ 25 rem | C ≥ 100 rem | C ≥ 100 rem |
| | | **Chemical** | C ≥ ERPG-2 | C ≥ ERPG-3 | C ≥ IDLH |
| **M** | **Moderate** | **Other Hazards** | Less than irreversible, other serious effects, or symptoms which could impair an individual's ability to take protective action. | Serious injury, no immediate loss of life no permanent disabilities; hospitalization required | Serious injury, no immediate loss of life, no permanent disabilities; hospitalization required |
| | | **Radiological** | 25 rem > C ≥ 5 rem | 100 rem > C ≥ 25 rem | 100 rem > C ≥ 25 rem |
| | | **Chemical** | ERPG-2 > C ≥ ERPG-1 | ERPG-3 > C ≥ ERPG-2 | IDLH > C ≥ PEL/TLV ceiling |
| **L** | **Low** | **Other Hazards** | Mild, transient adverse effects. | Minor injuries; no hospitalization | Minor injuries; no hospitalization |
| | | **Radiological** | 5 rem > C ≥ 0.5 rem | 25 rem > C ≥ 5 rem | 25 rem > C ≥ 5 rem |
| | | **Chemical** | ERPG-1 > C | ERPG-2 > C ≥ ERPG-1 | PEL/TLV ceiling > C ≥ PEL/TLV |
| **N** | **Negligible** | **Other Hazards** | Consequences less than those for Low Consequence Level | Consequences less than those for Low Consequence Level | Consequences less than those for Low Consequence Level |
| | | **Radiological** | 0.5 rem > C | 5 rem > C | 5 rem > C |
| | | **Chemical** | Consequences less than those for Low Consequence Level | ERPG-1 > C | PEL/TLV > C |

C – Concentration
IDLH – Immediately Dangerous to Life and Health
Rem – Roentgen Equivalent Man
ERPG – Emergency Response Planning Guideline
PEL – Permissible Exposure Limit
TLV – Threshold Limit Value

**Table 3.7-6. Qualitative Frequency Matrix**

| Abbreviation | Frequency Level | Description |
|---|---|---|
| A | Anticipated | Accidents that may occur several times during the lifecycle of facility (accidents that commonly occur). |
| U | Unlikely | Accidents that are not anticipated to occur during the lifecycle of the facility. Natural phenomena of this probability class include the following: International Building Code-level earthquake, maximum wind gust, etc. |
| EU | Extremely Unlikely | Accidents that probably do not occur during the lifecycle of the facility. |
| BEU | Beyond Extremely Unlikely | All other accidents. |

**Table 3.7-7. Qualitative Risk Matrix**

| Likelihood→ Consequence↓ | Anticipated (A) | Unlikely (U) | Extremely Unlikely (EU) | Beyond Extremely Unlikely (BEU) |
|---|---|---|---|---|
| High (H) | I | I | II | III |
| Moderate (M) | II | II | III | IV |
| Low (L) | III | III | IV | IV |
| Negligible (N) | IV | IV | IV | IV |
| I | Unacceptable | Further mitigation required and/or approval required; Preventative engineering controls desired. | | |
| II | Marginal | Further mitigation required and/or approval required; Preventative and/or Mitigative engineering and/or ACs. | | |
| III | Acceptable | Further mitigation not required; additional controls may include SMPs. | | |
| IV | Acceptable | No additional controls required. | | |

**Table 3.7-8. Hazards by Node**

| Node | Location | Hazard Form/Type |
|---|---|---|
| 1.1 | CPA ASP | ~ Radiological Materials<br>~ Reactions/Incompatibility<br>~ Chemical (Combustible)<br>~ Pressure<br>~ Thermal |

**Table 3.7-8. Hazards by Node (cont.)**

| Node | Location | Hazard Form/Type |
|---|---|---|
| 1.2 | CPA CSSX | ~ Radiological Materials<br>~ Reactions/Incompatibility<br>~ Electrical<br>~ Ionizing Radiation<br>~ Pressure<br>~ Thermal |
| 1.3 | CPA Labs | ~ Radiological Materials<br>~ Reactions/Incompatibility<br>~ Chemicals (Flammable; Asphyxiate)<br>~ Electrical<br>~ Hot Work/Open Flame<br>~ Ionizing Radiation<br>~ Physical Impact/Kinetic Energy<br>~ Pressure |
| 1.4 | CPA Labyrinth | ~ Radiological Materials<br>~ Reactions/Incompatibility<br>~ Electrical<br>~ Hot Work/Open Flame<br>~ Internal Flooding (Process Water)<br>~ Ionizing Radiation<br>~ Physical Impact/Kinetic Energy<br>~ Pressure<br>~ Thermal |
| 1.5 | CPA Support | ~ Reactions/Incompatibility |
| 2.2 | AFF Filter | ~ Radiological Materials<br>~ Reactions/Incompatibility<br>~ Electrical<br>~ Hot Work/Open Flame<br>~ Thermal |

**Table 3.7-9. Alpha Strike Process Tanks**

| # | Abbrev | Name | Location | Description | Capacity (gallons) | Cs-137 (Ci) | Pu-238 (Ci) | Notes |
|---|---|---|---|---|---|---|---|---|
| TK-101 | AST-A | Alpha Sorption Tank-A | AST-A Cell Rm 193 | Receives HLW and mixes with MST for Actinides/Sr adsorption process – located in Dark Cell | 37,550 | 190,000 | 190 | PC-3, APA |
| TK-102 | FFT-A | Filter Feed Tank-A | FFT-A Cell Rm 194 | Filter Feed Tank used to supply filters and store concentrated slurry – located in Dark Cell | 37,550 | 191,000 | 1,230 | PC-3, APA |
| TK-103 | CSDT-A | Cleaning Solution Dump Tank-A | SSRT/WWHT Cell Rm 196 | Tank, receives spent cleaning solution during filter cleaning cycles – located in Dark Cell | 1,000 | 709 | 95 | PC-1 |
| TK-104 | SSRT | Sludge Solids Receipt Tank | SSRT/WWHT Cell Rm 196 | Receives sludge from the FFT-A and MST/Sludge Transfer Tank from AFF – located in Dark Cell | 6,300 | 33,500 | 1,230 | PC-3, APA |
| TK-105 | WWHT | Wash Water Hold Tank | SSRT/WWHT Cell Rm 196 | Receives and stores wash water until transfer to AST – located in Dark Cell | 13,700 | 26,100 | 2 | PC-3, APA |
| TK-109 | SSFT | Salt Solution Feed Tank | SSFT Cell Rm 191 | Used to stage CSS for feed to cesium extraction contactors – located in Dark Cell | 46,100 | 233,000 | 18 | PC-3, APA |
| TK-127 | SAST | Spent Acid Storage Tank | ASDT Cell Rm 195 | Tank used to collect and store used acid from the filter cleaning cycle – located in Dark Cell | 4,400 | 22,200 | 22 | PC-1, Eductor |
| TK-235 | LDT | Lab Drain Tank | ASDT Cell Rm 195 | Tank used to collect material from lab drains – located in Dark Cell | 600 | 3,036 | 3 | PC-3 |
| TK-601 | ASDT | Alpha Sorption Drain Tank | ASDT Cell Rm 195 | Tank, used to collect ASP area drains until disposition determined – located in Dark Cell. | 4,390 | 22,200 | 22 | PC-1 |

**Table 3.7-10. Caustic-side Solvent Extraction Tanks**

| # | Abbrev | Name | Location | Description | Capacity (gallons) | Cs-137 (Ci) | Pu-238 (Ci) | Notes |
|---|---|---|---|---|---|---|---|---|
| TK-201 | DSSC | Decontaminated Salt Solution Coalescer | Spare Contactor Storage Area Maintenance Access Platform Rm 251 | Coalescer used to recover solvent from the decontaminated salt solution (DSS) – area accessible. | 650 | 65 | - | PC-1 |
| TK-202 | SHT | Solvent Hold Tank | West CSSX Tank Cell Rm 138 | Tank used to hold solvent – area accessible. | 710 | - | - | PC-1, Eductor |
| TK-203 | SESR | Strip Effluent Coalescer | East CSSX Tank Cell Rm 138A | Coalescer, Used to recover solvent from the aqueous strip stream – area not accessible; tank accessible from West CSSX Tank Cell. | 40 | 3,570 | - | PC-1 |
| TK-204 | CWT | Caustic Wash Tank | East CSSX Tank Cell Rm 138A | Used to hold dilute caustic wash solution – area not accessible | 490 | - | - | PC-1 |
| TK-205 | SEHT | Strip Effluent Hold Tank | SEHT Cell Rm 192 | Used to receive strip effluent – located in Dark Cell | 19,670 | 1,610,000 | - | PC-3, Eductor |
| TK-206 | BDT | Ba-137 Decay Tank | West CSSX Tank Cell Rm 138 | Tank used for DSS holdup to allow 137-Ba decay – area accessible. | 2,110 | - | - | PC-1 |
| TK-208 | SDT | Solvent Drain Tank | ASDT Cell Rm 195 | Used to collect drainage and flush from the CSSX contactors and to hold recovered solvent – located in Dark Cell | 4,390 | 48,800 | - | PC-1, Eductor |

**Table 3.7-10. Caustic-side Solvent Extraction Tanks (cont.)**

| # | Abbrev | Name | Location | Description | Capacity (gallons) | Cs-137 (Ci) | Pu-238 (Ci) | Notes |
|---|---|---|---|---|---|---|---|---|
| TK-211 | DSST | Decontaminated Salt Solution Stilling Tank | West CSSX Tank Cell Rm 138 | Used to separate aqueous from the organic liquids – area accessible. | 220 | 22 | - | PC-1 |
| TK-212 | SEST | Strip Effluent Stilling Tank | East CSSX Tank Cell Rm 138A | Used to separate aqueous from the organic liquids – area not accessible. | 30 | 2,440 | - | PC-1 |
| TK-215 | SEPT | Strip Effluent Pump Tank | East CSSX Tank Cell Rm 138A | Receives strip effluent from coalescer – area not accessible. | 64 | 4,970 | - | PC-1 |

**Table 3.7-11. Alpha Finishing Facility Tanks**

| # | Abbrev | Name | Location | Description | Capacity (gallons) | Cs-137 (Ci) | Pu-238 (Ci) | Notes |
|---|---|---|---|---|---|---|---|---|
| TK-207 | DSSHT | DSS Hold Tank | DSSHT/FFT – B (AFFF) Area Rm 141 | Tank used to store DSS prior to transfer to Tank 50 or Saltstone – area accessible. | 43,100 | 4,310 | 49 | PC-1, Eductor |
| TK-220 | IST | Intermediate Storage Tank | IST/AST – B Area (AFFM) Rm 142 | Receives DSS and sends to second MST strike or for use as a storage for sampling during single strike mode – area accessible. | 37,550 | 3,750 | 47 | PC-1, Eductor |
| TK-221 | AST-B | Alpha Sorption Tank-B | IST/AST – B Area (AFFM) Rm 142 | Receives DSS for second MST strike or for use as a storage for sampling during single strike mode – area accessible. | 37,550 | 3,750 | 61 | PC-1, Agitator |

**Table 3.7-11. Alpha Finishing Facility Tanks (cont.)**

| # | Abbrev | Name | Location | Description | Capacity (gallons) | Cs-137 (Ci) | Pu-238 (Ci) | Notes |
|---|---|---|---|---|---|---|---|---|
| TK-222 | FFT-B | Filter Feed Tank - B | DSSHT/FFT – B (AFFF) Area Rm 141 | Tank used to supply filters and store concentrated slurry from second MST strike – area accessible. | 37,550 | 3,750 | 125 | PC-1, Agitator |
| TK-223 | CSDT-B | Cleaning Solution Dump Tank - B | DSSHT/FFT – B (AFFF) Area Rm 141 | Tank, receives cleaning solution during filter cleaning cycles – area accessible. | 1,010 | 10 | 16 | PC-1 |
| TK-224 | MSTT | MST/Sludge Transfer Tank | DSSHT/FFT – B (AFFF) Area Rm 141 | Holds MST/Sludge from second strike before transfer – area accessible. | 2,010 | 198 | 64 | PC-1, Agitator |
| TK-228 | AFDT | Alpha Finishing Drain Tank | DSSHT/FFT – B (AFFF) Area Rm 141 | Tank, Used to collect miscellaneous drains from the AFF area – area accessible. | 1,780 | 178 | - | PC-1, Eductor |
| TK-236 | LCT-A | Lab Collection Tank-A | DSSHT/FFT – B (AFFF) Area Rm 141 | Tank used to collect material from lab bench sinks and lab scrubbers – area accessible. | 600 | 60 | - | PC-1, Eductor |
| TK-237 | LCT-B | Lab Collection Tank-B | DSSHT/FFT – B (AFFF) Area Rm 141 | Tank used to collect material from lab bench sinks and lab scrubbers- area accessible. | 600 | 60 | - | PC-1, Eductor |
| TK-604 | LLDT | Low Level Drain Tank | DSSHT/FFT – B (AFFF) Area Rm 141 | Collects fluids from floor drains – area accessible. | 250 | 25 | - | PC-1 |

**Table 3.7-12. Cold Chemicals Area Tanks**

| # | Abbrev | Name | Location | Description | Capacity (gallons) | Contents |
|---|---|---|---|---|---|---|
| TK-106 | FCAFT | Filter Cleaning Acid Feed Tank | CCA | Tank, Used to mix and store acid for transfer for filter cleaning. | 4100 | 20% $HNO_3$ |
| TK-107 | FCCT | Filter Cleaning Caustic Tank | CCA | Tank, Used to mix and store caustic prior to transfer for filter cleaning. | 1100 | Dilute NaOH |
| TK-108 | CDFT | Caustic Dilution Feed Tank | CCA | Tank, Used to mix dilute caustic solution feed | 9600 | 50% NaOH |
| TK-301 | PWT | Process Water Tank | CCA | Tank, Used to store process water. | 9500 | Water |
| TK-302 | CRT | Caustic Receipt Tank | CCA | Tank used to receive and store 50% caustic | 9,600 | 50% NaOH |
| TK-303 | CMT | Caustic Makeup Tank | CCA | Tank used to make up dilute caustic. | 2,500 | Dilute NaOH |
| TK-304 | NART | Nitric Acid Receipt Tank | CCA | Tank used to receive and store 20% wt $HNO_3$ | 2,500 | 20% $HNO_3$ |
| TK-305 | PWPT | Process Water Pressure Tank | CCA | Tank used to maintain header pressure | 400 | Water |
| TK-307 | NASMT | Nitric Acid Scrub Makeup Tank | CCA | Tank used for make-up and storage of scrub $HNO_3$ solution. | 2,500 | Dilute $HNO_3$ |
| TK-311 | MSTST | MST Storage Tank | CCA | Tank, Used to mix and store MST slurry prior to transfer | 1000 | MST |
| TK-312 | DIWT | DI Water Storage Tank | CCA | Tank used to store deionized (DI) water. | 7,500 | DI Water |
| TK-313 | SMT | Solvent Makeup Tank | CCA | Tank used for solvent makeup. | 70 | CSSX Solvent |
| TK-317 | NT | Neutralization Tank | CCA | Tank used to collect and neutralize as required spills and liquids collected in the CCA sumps; supply caustic to various destinations (e.g., analytical lab scrubbers) | 500 | $HNO_3$ or NaOH |

**Table 3.7-13. Hazards Analysis Initial Conditions**

| IC # | IC Name | Description/Safety Function | Functional Requirement |
|---|---|---|---|
| IC-1 | Access Control<br>• Alpha Strike Process Dark Cells<br>• East Caustic-Side Solvent Extraction Process Dark Cell<br>• Strip Effluent Hold Tank Cell<br>• Waste Transfer Enclosure | ~ Personnel will not enter the Dark Cells (ASP, East CSSX Tank Cell, SEHT, and WTE) for the life of the facility | ~ PC-3 Construction<br>~ Meets design specifications for structural integrity<br>~ Meets design specifications for radiation shielding |
| IC-2 | Alpha Finishing Facility Dikes | ~ AFF diked areas provide secondary containment to process stream<br>NOTE: The Alpha Finishing Facility Dikes are of significance to prevent material contained within the MST-side from impacting material contained within the filtration-side | ~ PC-1 Construction<br>~ Meets design criteria |
| IC-3 | Central Processing Area Shielding | ~ CPA walls provide radiation shielding to occupied areas<br>~ P&VG walls and labyrinth provide radiation shielding to occupied areas<br>~ CR walls provide radiation shielding to occupied areas<br>~ Hot Cell walls provide radiation shielding to occupied areas<br>NOTE: The Central Processing Area Shielding executes the concept of ALARA which is governed by the Radiation Protection Program (Chapter 7) | ~ PC-3 Construction<br>~ Meets design specifications for structural integrity<br>~ Meets design specifications for radiation shielding |

**Table 3.7-13. Hazards Analysis Initial Conditions (cont.)**

| IC # | IC Name | Description/Safety Function | Functional Requirement |
|---|---|---|---|
| IC-4 | Central Processing Area Structure | ~ The CPA enclosures and walls act as a fire areas to contain and prevent further propagation of internal or external fires<br>~ ASP Cells provide secondary containment of process stream<br>~ CSSX area provides secondary containment of process stream<br>~ P&VG provide secondary containment of process stream<br>~ WTE provides secondary containment of process stream | ~ PC-3 Construction<br>~ Meets NFPA 801, Standard for Fire Protection for Facilities Handling Radioactive Materials<br>~ Meets design specifications<br>~ No electrical/sparking equipment internal to the ASP process cell<br>~ Minimal combustible loading within CSSX area, P&VG, and WTE |
| IC-5 | Cross Flow Filter Tubes<br>• Alpha Strike Process<br>• Alpha Finishing Facility | ~ Protects assumptions/parameters in criticality calculations which show criticality is not a credible event<br>~ Provide primary containment/confinement of Actinides within the process stream<br>~ Filtration of MST-solids from process stream<br>~ Stainless steel construction materials resist corrosion | ~ PC-1 Construction<br>~ Meets design specifications |
| IC-6 | Lightning Protection System | ~ Provides route for passive discharge of lightning to ground<br>NOTE: The Lightning Protection System is maintained in association with the Fire Protection Program (TSR 5.8.2.6) | ~ Compliant with NFPA 780, Standard for the Installation of Lightning Protection Systems<br>~ Meets design specifications |
| IC-7 | Process Chemistry | ~ Defines the parameters and acceptance of MST solution chemistry<br>~ Defines the parameters and acceptance of CSSX solvent chemistry | ~ Meets procurement specifications<br>~ The MST solution is within an acceptable percent-weight of alcohols<br>~ The CSSX solvent flash point is within an acceptable range |

**Table 3.7-13. Hazards Analysis Initial Conditions (cont.)**

| IC # | IC Name | Description/Safety Function | Functional Requirement |
|---|---|---|---|
| IC-9 | Waste Acceptance Criteria (Incoming) | ~ Bounds SWPF processing parameters<br>~ Bounds assumptions/parameters in chemical process efficiency/affinity<br>~ Bounds assumptions/parameters in criticality calculations which show criticality is not a credible event<br>~ Bounds assumptions/parameters for accident analysis dose calculations | ~ Maintain limits for feed to the facility concerning key radionuclide concentrations, key chemical compound concentrations, and fissile material concentrations |

**Table 3.7-14. Hazard Analysis Control List**

| Control # | Control Name | Event Type | Control Designation | Chapter 4/5 Coverage |
|---|---|---|---|---|
| AC-1 | Access Control | ~ Fire<br>~ Loss of Confinement<br>~ Direct Exposure<br>~ NPH | SAC | Section 4.5.12 |
| AC-2 | Manual Disconnect Switch | ~ NPH<br>~ | SAC | Section 4.4.30<br>Section 4.5.8<br>Section 4.5.9<br>Section 4.5.10 |
| AC-3 | Safety Management Program:<br>• Radiation Protection<br>• Industrial Hygiene/Occupational Safety | ~ Fire<br>~ Loss of Confinement<br>~ Direct Exposure<br>~ NPH | AC | Chapter 7<br>Chapter 8 |
| AC-4 | Solvent Removal Program | ~ Fire<br>~ Explosion<br>~ NPH | SAC | Section 4.5.4 |
| AC-5.a | Standard Operating Procedure/Training:<br>• Control Operator – Process Piping Line Drain/Flush | ~ Fire<br>~ Loss of Confinement<br>~ Direct Exposure<br>~ | SAC | Section 4.5.11 |
| AC-5.b | Standard Operating Procedure/Training:<br>• Control Operator – APA Isolation | ~ Loss of Confinement | SAC | Section 4.5.13 |
| AC-5.c | Standard Operating Procedure/Training:<br>• Caustic-Side Solvent Extraction Contactor Change-out<br>• Hoisting and Rigging<br>• Analytical Laboratory Operations<br>• Preventive/Scheduled Maintenance | ~ Fire<br>~ Explosion<br>~ Loss of Confinement<br>~ Direct Exposure | AC | Section 5.5.5.1 |
| AC-6 | Tank Agitation Program | ~ Fire<br>~ Explosion | SAC<br><br>AC | Section 4.5.5<br>Section 4.5.6<br>Section 5.5.5.2.21 |

**Table 3.7-14. Hazard Analysis Control List (cont.)**

| Control # | Control Name | Event Type | Control Designation | Chapter 4/5 Coverage |
|---|---|---|---|---|
| EC-1 | Air Dilution System | ~ Fire<br>~ Explosion | SS EC | Section 4.4.12 |
| EC-2 | Air Dilution System Backup Air Receivers | ~ NPH | SS EC | Section 4.4.12 |
| EC-3 | Cell Design<br>• Alpha Strike Process<br>• East & West Caustic-Side Solvent Extraction Tank Cell<br>• Strip Effluent Hold Tank Cell<br>• Waste Transfer Enclosure | ~ Fire | SS EC | Section 4.4.7 |
| EC-4 | Control Room Design | ~ NPH | SS EC | Section 4.4.6 |
| EC-5 | Drum Vent | ~ Fire<br>~ Explosion | SS EC | Section 4.4.29 |
| EC-6 | Glovebox Design | ~ Fire<br>~ NPH | SS EC | Section 4.4.9 |
| EC-7 | Grounding<br>• Alpha Strike Process<br>• Caustic-Side Solvent Extraction Vessels | ~ Fire<br>~ Explosion | SS EC | Section 4.4.3 |
| EC-8 | High Efficiency Air Particulate Filters:<br>• Process Building Ventilation System<br>• Process Vessel Ventilation System<br>• Alpha Finishing Facility Ventilation System<br>• Cell Inlet | ~ Fire<br>~ Explosion<br>~ Loss of Confinement | SS EC | Section 4.4.11 (PVVS)<br>Section 4.4.13 (PBVS Exhaust & Cell Inlet)<br>Section 4.4.16 (AFF) |
| EC-9 | Hot Cell Design | ~ Loss of Confinement<br>~ Direct Exposure<br>~ NPH | SS EC | Section 4.4.9 |
| EC-10 | Restrictive Flow Orifice | ~ Loss of Confinement | SS EC | Section 4.4.10 |

**Table 3.7-14. Hazard Analysis Control List (cont.)**

| Control # | Control Name | Event Type | Control Designation | Chapter 4/5 Coverage |
|---|---|---|---|---|
| EC-11.a | Safety Instrumented System:<br>• Glovebox 8 & 9 Low Vacuum Interlock | ~ Fire | SS EC | Section 4.4.17 (SIS)<br>Section 4.4.20 (Glovebox and HC) |
| EC-11.b | Safety Instrumented System:<br>• Hot Cell Low Vacuum Interlock | ~ Fire<br>~ Loss of Confinement<br>~ Direct Exposure | SS EC | Section 4.4.17 (SIS)<br>Section 4.4.20 (Glovebox and HC) |
| EC-11.c | Safety Instrumented System:<br>• Tank Temperature Interlocks | ~ Fire<br>~ Explosion | SS EC | Section 4.4.17 (SIS)<br>Section 4.4.18 (FFT-A and SSRT Temp)<br>Section 4.4.19 (FFT-B Temp) |
| EC-12 | Sample Line Design<br>• Analytical Laboratory | ~ Loss of Confinement<br>~ Direct Exposure<br>~ NPH (PC-3 only) | SS EC | Section 4.4.4 |
| EC-13 | Sump Drain Line Design<br>• Pump and Valve Gallery Sump Drain Lines<br>• Caustic-Side Solvent Extraction (contactor room, support floor chase, east & west CSSX tank cells)<br>• Hot Cell | ~ Loss of Confinement<br>~ Direct Exposure | SS EC | Section 4.4.7<br>Section 4.4.8 |
| EC-14 | Valve & Piping Design<br>• Pump and Valve Gallery | ~ Fire<br>~ Explosion<br>~ Loss of Confinement<br>~ Direct Exposure<br>~ NPH | SS EC | Section 4.4.4 |
| EC-15 | Ventilation System<br>• Analytical Laboratory Ventilation System – Process Building Ventilation System | ~ Fire<br>~ Explosion<br>~ Loss of Confinement<br>~ Direct Exposure | SS EC | Section 4.4.14 |

**Table 3.7-14. Hazard Analysis Control List (cont.)**

| Control # | Control Name | Event Type | Control Designation | Chapter 4/5 Coverage |
|---|---|---|---|---|
| EC-16 | Ventilation System<br>• Process Building Ventilation System | ~ Fire<br>~ Explosion<br>~ Loss of Confinement | SS EC | Section 4.4.13 |
| EC-17 | Alpha Strike Process Process Vessel & Piping Design | ~ Fire<br>~ NPH | SS EC | Section 4.4.1<br>Section 4.4.4 |

**Table 3.7-15. Hazards Analysis Engineering Controls**

| Control # | Control Designation | Control Name | P/M | Receptor | Description/Safety Function | Functional Requirement |
|---|---|---|---|---|---|---|
| EC-1 | SS SSC | Air Dilution System | P | W/CW/P | ~ Provide continuous dilution air to select vessels within the CPA sufficient to maintain vessel headspace < LFL (normal operations) | ~ PC-3 Construction<br>~ Meets design specifications<br>~ Sized to supply sufficient air supply to select vessels during normal operations |
| EC-2 | SS SSC | Air Dilution System Backup Air Receivers | P | W/CW/P | ~ Provide backup air to the ADS to maintain < LFL during abnormal operations<br>~ Provides a connection point for a portable air compressor to augment the back-up air receivers in the ADS | ~ PC-3 Construction<br>~ Meets Design Specifications<br>~ Automatic switchover upon loss of normal ADS supply<br>~ Provides a connection point for a portable air compressor. |
| EC-3 | SS SSC | Cell Design<br>• Alpha Strike Process<br>• East & West Caustic-Side Solvent Extraction Tank Cell<br>• Strip Effluent Hold Tank Cell<br>• Waste Transfer Enclosure | P | W/CW | ~ Provides independent separation of process vessels<br>~ Provides secondary containment to process stream | ~ PC-3 Construction<br>~ Meets design specifications |

**Table 3.7-15. Hazards Analysis Engineering Controls (cont.)**

| Control # | Control Designation | Control Name | P/M | Receptor | Description/Safety Function | Functional Requirement |
|---|---|---|---|---|---|---|
| EC-4 | SS SSC | Control Room Design | P | W/CW/P | ~ Provides a structural barrier between the Control Operator and the P&VGs | ~ PC-3 Construction<br>~ Meets design specifications |
| EC-5 | SS SSC | Drum Vent | P | W | ~ Provides passive venting of hydrogen buildup in drums from radiolysis | ~ Meets SRS Solid Waste Management Facility WAC requirements for vessels with the potential for content radiolysis |
| EC-6 | SS SSC | Glovebox Design | P | W | ~ Provides primary barrier between facility Worker and process stream sample in the Analytical Laboratory | ~ PC-1 Construction<br>~ Meets design specifications for structural integrity |
| EC-7 | SS SSC | Grounding<br>• Alpha Strike Process<br>• Caustic-Side Solvent Extraction Vessels | P | W/CW/P | ~ Prevents buildup of static charge within vessels and piping | ~ PC-3 Construction<br>~ Meets design specifications<br>~ Compliant with NFPA 30, Flammable and Combustible Liquids Code |

**Table 3.7-15. Hazards Analysis Engineering Controls (cont.)**

| Control # | Control Designation | Control Name | P/M | Receptor | Description/Safety Function | Functional Requirement |
|---|---|---|---|---|---|---|
| EC-8 | SS SSC | High Efficiency Air Particulate Filters:<br>• Process Building Ventilation System<br>• Process Vessel Ventilation System<br>• Alpha Finishing Facility Ventilation System<br>• Cell Inlet | M | W/CW | ~ The HEPA filter, fan housings, and interconnected ductwork serve to confine the airborne contamination within the filtration and exhaust trains to prevent an unfiltered radiological release external to the SWPF | ~ PC-1 Construction<br>~ Meets design specifications |
| EC-9 | SS SSC | Hot Cell Design | P | W | ~ Hot Cell walls provide barrier between facility Worker and process stream sample piping in the Analytical Laboratory | ~ PC-3 Construction of reinforced concrete walls<br>~ Meets design specifications for structural integrity |
| EC-10 | SS SSC | Restrictive Flow Orifice | M | W/CW | ~ Restricts volume of air flow to the APA | ~ PC-3 Construction<br>~ Meets design specifications for structural integrity |

**Table 3.7-15. Hazards Analysis Engineering Controls (cont.)**

| Control # | Control Designation | Control Name | P/M | Receptor | Description/Safety Function | Functional Requirement |
|---|---|---|---|---|---|---|
| EC-11.a | SS SSC | Safety Instrumented System:<br>• Glovebox 8 & 9 Interlock | P | W/CW/P | ~ Performs the input logic processing for the select CR alarms<br>~ Provides indication and status of select systems<br>~ Glovebox 8 & 9 Interlock – Measures the differential pressure in the GB; prevents catastrophic release of the sample process stream into the glovebox if the glovebox is not at negative pressure to the room | ~ PC-3 Construction<br>~ Manage process input parameters; on detection of set point exceedance place components in their respective safe state (stop the pumps)<br>~ On detection of set point exceedance activate the respective CR alarm |
| EC-11.b | SS SSC | Safety Instrumented System:<br>• Hot Cell Low Vacuum Interlock | P | W/CW/P | ~ Performs the input logic processing for the select CR alarms<br>~ Provides indication and status of select systems<br>~ Hot Cell Low Vacuum Interlock – Measures the differential pressure in the Hot Cell; prevents catastrophic release of the sample process stream into the Hot Cell if the Hot Cell is not at negative pressure to the room | ~ PC-3 Construction<br>~ Manage process input parameters; on detection of set point exceedance place components in their respective safe state (stop the pumps)<br>~ On detection of set point exceedance activate the respective CR alarm |

**Table 3.7-15. Hazards Analysis Engineering Controls (cont.)**

| Control # | Control Designation | Control Name | P/M | Receptor | Description/Safety Function | Functional Requirement |
|---|---|---|---|---|---|---|
| EC-11.c | SS SSC | Safety Instrumented System:<br>• Tank Temperature Interlock | P | W/CW/P | ~ Performs the input logic processing for the select CR alarms<br>~ Provides indication and status of select systems<br>~ Tank Temperature Interlock – Stops the filter recirculation pumps in the ASP/AFF when temperature parameters are exceeded | ~ PC-3 Construction<br>~ Manage process input parameters; on detection of set point exceedance place components in their respective safe state (stop the pumps)<br>~ On detection of set point exceedance activate the respective CR alarm |
| EC-12 | SS SSC | Sample Line Design<br>• Analytical Laboratory | P | W | ~ Provide primary containment/confinement of process stream between select vessels and hot cell<br>~ Process piping includes flanged connections and pump seals and housing<br>~ Stainless steel construction materials resist corrosion | ~ PC-3 Construction (CPA select vessels to Hot Cell)<br>~ Meets design specifications |
| EC-13 | SS SSC | Sump Drain Line Design:<br>• Pump and Valve Gallery Sump Drain Lines<br>• Caustic-Side Solvent Extraction (contactor room, support floor chase, east & west CSSX tank cells)<br>• Hot Cell | M | W/CW | ~ Provides secondary containment for spills<br>~ Routes material via gravity-fed lines to drainage tanks<br>~ Stainless steel construction materials resist corrosion | ~ PC-3 Construction<br>~ Meets design specifications<br>~ Sized to provide sufficient drainage to secondary containment vessels<br>~ Designed to provide gravity-directed overflow to secondary containment vessels |

**Table 3.7-15. Hazards Analysis Engineering Controls (cont.)**

| Control # | Control Designation | Control Name | P/M | Receptor | Description/Safety Function | Functional Requirement |
|---|---|---|---|---|---|---|
| EC-14 | SS SSC | Valve & Piping Design<br>• Pump and Valve Gallery | P | W/CW | ~ Provide primary containment/confinement of process stream between vessels<br>~ Process piping includes flanged connections and pump seals and housing<br>~ Stainless steel construction materials resist corrosion | ~ PC-3 Construction<br>~ Meets design specifications |
| EC-15 | SS SSC | Ventilation System:<br>• Analytical Laboratory Ventilation System – Process Building Ventilation System | M | W | ~ Provides air pathway through the Hot Cell and AFF Sample Gloveboxes (8 & 9) in the Analytical Laboratory<br>~ Provides negative pressure with respect to the occupied spaces of the Analytical Laboratory | ~ PC-1 Construction<br>~ Meets design specifications<br>~ Maintains negative pressure of the Hot Cell and AFF Sample Gloveboxes (8 & 9) to the occupied laboratory area<br>~ Directs analytical laboratory area airflow |

**Table 3.7-15. Hazards Analysis Engineering Controls (cont.)**

| Control # | Control Designation | Control Name | P/M | Receptor | Description/Safety Function | Functional Requirement |
|---|---|---|---|---|---|---|
| EC-16 | SS SSC | Ventilation System<br>• Process Building Ventilation System | M | W | ~ Provides airflow through occupied areas and routes contaminants away from the Worker<br>~ Maintains negative pressure to occupied spaces in the CPA by zone and directs airflow | ~ PC-1 Construction<br>~ Meets design specifications<br>~ Zones are balanced to maintain cascading air flow based on the potential for contamination<br>~ Directs process building airflow via fans and associated ductwork as applicable |
| EC-17 | SS SSC | Process Vessel & Piping Design<br>• Alpha Strike Process<br>• | P | W/CW/P | ~ Provide primary containment/confinement of process stream between select vessels<br>~ Process piping includes flanged connections and pump seals and housing<br>~ Provides passive venting via the tank orifice, PVVS, and/or vessel overflow lines<br>~ Stainless steel construction materials resist corrosion | ~ PC-3 Construction – select vessels & process piping<br>~ Meets design specifications |

P – Preventive Control; M – Mitigative Control
Receptors: Worker (W), Collocated Worker (CW), Public (P)

**Table 3.7-16. Hazards Analysis Administrative Controls**

| Control # | Control Designation | Control Name | P/M | Receptor | Description/Safety Function | Functional Requirement |
|---|---|---|---|---|---|---|
| AC-1 | SAC | Access Control | P | W | ~ Restricts personnel access into the AFF (processing areas only) after NPH<br>~ Restricts personnel access to the CSSX Contactor Deck during normal operations<br>~ Restricts personnel access to the West CSSX Tank Cells during normal operations<br>~ Restricts personnel access to the Hot Cell during normal operations<br>~ Restricts personnel access to the Glovebox 8 & 9 during normal operations<br>~ Restricts Access to CPA P&VG during normal operations | ~ Personnel do not enter the main processing areas of the AFF following an NPH event<br>~ Personnel do not enter the CSSX Contactor Deck while operational and process stream is present<br>~ Personnel do not enter the West CSSX Tank Cells while operational and process stream is present<br>~ Personnel do not enter the Hot Cells while operational and process stream is present<br>~ Personnel do not enter Glovebox 8 & 9 while operational and process stream is present<br>~ Personnel do not enter the ASP P&VG while operational and process stream is present |
| AC-2 | SAC | Manual Disconnect Switch | M | CW/P | ~ Disconnect power to the SWPF<br>~ Stops transfer of process stream | ~ Provides a means of removing all electrical power to the SWPF thereby shutting down power to all process and recirculation pumps |

**Table 3.7-16. Hazards Analysis Administrative Controls (cont.)**

| Control # | Control Designation | Control Name | P/M | Receptor | Description/Safety Function | Functional Requirement |
|---|---|---|---|---|---|---|
| AC-3 | AC | Safety Management Program:<br>• Radiation Protection<br>• Industrial Hygiene/Occupational Safety | P | W | ~ Radiation Protection – ALARA, dark cell access plug design/removal procedures, work planning, radiological work permits, personnel protective equipment<br>~ Industrial Hygiene/Occupational Safety – hot work permits, work planning, hoisting and rigging, control of hazardous energy, personnel protective equipment | ~ Provide corporate-level guidance for worker safety |
| AC-4 | SAC | Solvent Removal Program | P | CW/P | ~ Prevents appreciable buildup of residual solvent the Intermediate Storage Tank (IST) in the AFF | ~ Remove residual solvent from the Intermediate Storage Tank (IST) in AFF<br>~ Solvent removal interval shall be based on throughput volume of Cesium-Depleted Clarified Salt Solution (CDCSS) processed |
| AC-5.a | SAC | Standard Operating Procedure/Training:<br>• Control Operator – Process Piping Line Drain/Flush | P | W/CW/P | ~ SOP – Provides stepwise task description for preventing Worker errors during operations and/or maintenance<br>~ Training – Workers are trained and qualified | ~ Provide step-by-step instructions to qualified workers on job tasks and when/how to drain/flush process piping lines |
| AC-5.b | SAC | Standard Operating Procedure/Training:<br>• Control Operator – APA Isolation | M | W/CW/P | ~ SOP – Provides stepwise task description for preventing Worker errors during operations and/or maintenance<br>~ Training – Workers are trained and qualified | ~ Provide step-by-step instructions to qualified workers on job tasks such as when/how to perform APA isolation |

**Table 3.7-16. Hazards Analysis Administrative Controls (cont.)**

| Control # | Control Designation | Control Name | P/M | Receptor | Description/Safety Function | Functional Requirement |
|---|---|---|---|---|---|---|
| AC-5.c | AC | Standard Operating Procedure/Training:<br>• Caustic-Side Solvent Extraction Contactor Change-out<br>• Hoisting and Rigging<br>• Analytical Laboratory Operations<br>• Preventive/Scheduled Maintenance | P | W/CW/P | ~ SOP – Provides stepwise task description for preventing Worker errors during operations and/or maintenance<br>~ Training – Workers are trained and qualified | ~ Provide step-by-step instructions to qualified workers on job tasks such as when/how to drain/flush process piping lines, CSSX contactor change-out, hoisting and rigging, Analytical Laboratory operations (propane cylinder change-out), preventive/scheduled maintenance, etc. |
| AC-6 | SAC | Tank Agitation Program | P | CW/P | ~ Maintain solids suspended in the process vessels<br>NOTE: The Tank Agitation Program was determined to be needed to protect an IC for AA per Subchapter 3.4, and is elevated to IC-14 implemented through an SS SAC (Subchapter 4.5.5, 4.5.6) | ~ Operation of APAs shall be confirmed periodically<br>~ Operation of mechanical agitators shall be confirmed periodically |

P – Preventive Control; M – Mitigative Control
Receptors: Worker (W), Collocated Worker (CW), Public (P)

**Table 3.7-17. Hazards Analysis Defense-In-Depth/Important-To-Safety Controls**

| Control # | Control Name | Event Type | Description/Safety Function |
|---|---|---|---|
| DID/ITS-1 | Backup Power:<br>• Generator<br>• Uninterruptible Power Supply | ~ Loss of Confinement<br>~ NPH (lightning) | ~ Provides backup power to select SWPF systems in the event of a power outage |
| DID/ITS-2 | Basic Process Control System | ~ Fire<br>~ Explosion<br>~ Loss of Confinement<br>~ Direct Exposure | ~ Provides logic for the control operator to turn on/off pumps<br>~ Provides status of process systems to control operator<br>~ Controls remote transfer, processing, and treatment of process stream |
| DID/ITS-3 | Class I/Division II Electrical | ~ Fire<br>~ Explosion | ~ Prevents buildup of static charge within ASP vessel instrumentation; instrumentation is external to the "Dark Cells" |
| DID/ITS-4 | Fire Protection System:<br>• Alpha Finishing Facility<br>• Caustic-Side Solvent Extraction<br>• Pump and Valve Gallery | ~ Fire<br>~ Explosion<br>~ Loss of Confinement<br>~ Direct Exposure | ~ Detects smoke and elevated temperatures within select areas<br>~ Provides wet suppression within select areas<br>~ Provides portable fire extinguishers throughout the facility |
| DID/ITS-5 | Grounding:<br>• Caustic-Side Solvent Extraction Contactors<br>• Alpha Finishing Facility<br>• Pump and Valve Gallery | ~ Fire<br>~ Explosion<br>~ NPH (lightning) | ~ Prevents buildup of static charge within vessels and piping |

**Table 3.7-17. Hazards Analysis Defense-In-Depth/Important-To-Safety Controls (cont.)**

| Control # | Control Name | Event Type | Description/Safety Function |
|---|---|---|---|
| DID/ITS-6<br><br>*These parts of this control have been elevated to an SS SSC and are no longer classified DID/ITS | High Efficiency Air Particulate Filters:<br>• Alpha Finishing Facility Vessel Ventilation System<br>• Glovebox 8 & 9*<br>• Hot Cell*<br>• Analytical Laboratory Ventilation System* | ~ Fire<br>~ Explosion<br>~ Loss of Confinement<br>~ Direct Exposure | ~ The HEPA filter, fan housings, and interconnected ductwork serve to confine the airborne contamination within the filtration and exhaust trains to prevent an unfiltered radiological release external to the SWPF<br><br>*NOTE: These parts of this control were deemed a major contributor to DID, and therefore are elevated to SS SSC status (EC-19/EC-23) for implementation via Chapter 4 (4.4.14 and 4.4.16) |
| DID/ITS-7 | Mechanical Agitators | ~ Fire<br>~ Explosion | ~ Mechanically agitates vessel contents to ensure mixing and prevent buildup of concentrated hydrogen from radiolysis to the tank headspace for select vessels (Alpha Sorption Tank – B, Filter Feed Tank – B, and MST/Sludge Transfer Tank) |
| DID/ITS-8<br><br>A portion of this control has been elevated to an SS SSC and is no longer classified DID/ITS | Plant Air System | ~ Fire<br>~ Explosion<br>~ Loss of Confinement | ~ Provides air supply to the APA during normal operations<br>~ Provides air supply to the ADS during normal operations; ADS has a stand-alone backup compressor<br>NOTE: The Plant Air System configuration to the APA portion of this control was elevated to SS SSC status (EC-20) within the AA per Subchapter 3.4, for implementation via Chapter 4 (4.4.10) |
| DID/ITS-9<br><br>The BDT gamma interlock portion of this control has been elevated to an SS SSC and is no longer classified DID/ITS | Safety Instrumented System:<br>• Sump Leak Detection – Alpha Sorption Process<br>• Sump Leak Detection – Waste Transfer Enclosure<br>• BDT Gamma Interlock | ~ Loss of Confinement | ~ Performs the input logic processing for the select CR alarms<br>~ Provides indication and status of select systems<br>~ Sump Leak Detection – Provides alarm indication of excess material in the ASP/WTE secondary containment sump<br>~ Gamma Interlock – Provides alarm indication of excess Cs in the process stream during transfers to AFF<br><br>NOTE: The BDT gamma interlock portion of this control was elevated to IC-10 for the AA, and therefore is elevated to SS SSC status for implementation via Chapter 4 (4.4.22) |

**Table 3.7-17. Hazards Analysis Defense-In-Depth/Important-To-Safety Controls (cont.)**

| Control # | Control Name | Event Type | Description/Safety Function |
|---|---|---|---|
| DID/ITS-10 | Stack Radiation Monitor | ~ Fire<br>~ Explosion<br>~ Loss of Confinement<br>~ Direct Exposure | ~ Monitors airborne radiation in the SWPF exhaust stack<br>~ Detects radiation levels in the SWPF stack exhausted air stream<br>~ Detects potential HEPA filter breakthrough in the SWPF stack exhausted air stream |
| DID/ITS-11<br><br>The control has been elevated to an SS SSC and is no longer classified DID/ITS | Ventilation System<br>• Alpha Finishing Facility Ventilation System | ~ Fire<br>~ Explosion<br>~ NPH | ~ Provides airflow through occupied areas in the AFF and routes contaminants away from the Worker.<br><br>NOTE: This control was deemed a major contributor to DID, and therefore is elevated to SS SSC status (EC-23) for implementation via Chapter 4 (4.4.16) excluding NPH event types |
| DID/ITS-12 | Vessel & Piping Design<br>• Alpha Finishing Facility<br>• Caustic-Side Solvent Extraction Contactors<br>• Caustic-Side Solvent Extraction (select vessels)<br>• Alpha Finishing Facility Vessels | ~ NPH | ~ Provide primary containment/confinement of process stream between vessels<br>~ Process piping includes flanged connections and pump seals and housing<br>~ Provides passive venting via the tank orifice, PVVS, and/or vessel overflow lines<br>~ Stainless steel construction materials resist corrosion |
| DID/ITS-13 | Vessel Ventilation System<br>• Alpha Finishing Facility Vessel Ventilation System | ~ Explosion | ~ Provides a passive exhaust pathway for the air that ventilates the AFF vessels to maintain vessel headspace < LFL (e.g., tank purge, level bubblers) |

**Table 3.7-17. Hazards Analysis Defense-In-Depth/Important-To-Safety Controls (cont.)**

| Control # | Control Name | Event Type | Description/Safety Function |
|---|---|---|---|
| DID/ITS-14<br><br>The control has been elevated to an SS SSC and is no longer classified DID/ITS | Vessel Ventilation System<br>• Process Vessel Ventilation System | ~ Fire<br>~ Explosion<br>~ Loss of Confinement<br>~ Direct Exposure | ~ Exhausts process vessels to maintain vessel headspace < LFL<br><br>NOTE: This control was elevated to SS SSC status (EC-22) within the Accident Analysis per Subchapter 3.4, for implementation via Chapter 4 (4.4.11) |
| DID/ITS-15 | Air Pulse Agitator | ~ Fire<br>~ Explosion | ~ Agitates contents of select process vessels to ensure mixing |
| DID/ITS-16<br><br>The control has been elevated to an SS SSC and is no longer classified DID/ITS | Waste Transfer Enclosure Vent Line | ~ Fire | ~ Provides passive ventilation into the PBVS from the WTE<br>~ Maintains negative pressure to the WTE and directs airflow<br><br>NOTE: This control was deemed a major contributor to DID, and therefore is elevated to SS SSC status (EC-24) for implementation via Chapter 4 (4.4.15) |

**Table 3.7-18. Accident Analysis Control Crosswalk**

| Control # | 3.3 HA | Abbreviated Control Name | 3.4 DBA | DSA Disposition[A] | Chpt 4 Coverage | Chpt 5 Coverage | TSR Coverage |
|---|---|---|---|---|---|---|---|
| IC-1 | X | Access Control<br>• Alpha Strike Process Dark Cells<br>• East Caustic-Side Solvent Extraction Process Dark Cell<br>• Strip Effluent Hold Tank Cell<br>• Waste Transfer Enclosure Dark Cell | S 3.4.2.1 Cell Fire<br>S 3.4.2.2 ASP Exp<br>S 3.4.2.4 Aero<br>S 3.4.2.5 Seismic | SS SSC EC | S 4.4.6 | Table 5.8-2 | DF 6.0 |
| IC-4 | X | Central Processing Area Structure | S 3.4.2.1 Cell Fire<br>S 3.4.2.5 Seismic | SS SSC EC | S 4.4.5<br>S 4.4.7 | Table 5.8-2 | DF 6.0 |
| IC-5 | X | Cross Flow Filter (Tubes)<br>• Alpha Strike Process<br>• Alpha Finishing Facility | S 3.4.2.2 ASP Exp<br>S 3.4.2.3 AFF Exp<br>S 3.4.2.4 Aero | SS SSC EC | S 4.4.1 (partial) | Table 5.8-2 | DF 6.0 |
| IC-7 | X | Process Chemistry | No Applicable DBA | SAC | S 4.5.2 | 5.5.5.3 | SAC 5.8.3.2 |
| IC-9 | X | Waste Acceptance Criteria (Incoming) | No Specific DBA | SAC | S 4.5.1 | 5.5.5.3 | SAC 5.8.3.1 |
| IC-10 | - | BDT Gamma Interlock | S 3.4.2.3 AFF Exp<br>S 3.4.2.5 Seismic | Elevated SS SSC EC | S 4.4.22 | 5.5.1.2 | LCO 3.1.2 |
| IC-11 | - | High Turbidity Interlock | S 3.4.2.3 AFF Exp<br>S 3.4.2.5 Seismic | Elevated SS SSC EC | S 4.4.21 | 5.5.1.1 | LCO 3.1.1 |
| IC-12 | - | PVVS Low-Vacuum Alarm | S 3.4.2.2 ASP Exp<br>S 3.4.2.5 Seismic | Elevated SS SSC EC | S 4.4.24 | 5.5.2.1 | LCO 3.2.1 |

[A] Controls noted as "Elevated" were considered either a major contributor to DID or considered an initial condition/assumption for the Accident Analysis.

**Table 3.7-18. Accident Analysis Control Crosswalk (cont.)**

| Control # | 3.3 HA | Abbreviated Control Name | 3.4 DBA | DSA Disposition[A] | Chpt 4 Coverage | Chpt 5 Coverage | TSR Coverage |
|---|---|---|---|---|---|---|---|
| IC-13 | - | ADS Low Pressure Alarms | S 3.4.2.2 ASP Exp<br>S 3.4.2.5 Seismic | Elevated SS SSC EC to IC | S 4.4.23 | 5.5.3.1 | LCO 3.3.1 |
| IC-14 | - | Tank Agitation Program | S 3.4.2.2 ASP Exp<br>S 3.4.2.3 AFF Exp | Elevated to IC with SAC for tanks normally containing solids (i.e., AST-A, FFT-A, SSRT, FFT-B, MSTT)<br>Prog AC for SSFT, WWHT, ASDT, SAST | S 4.5.5<br>S 4.5.6 | 5.5.1.5<br>5.5.4.1<br>5.5.5.2.21 | LCO 3.1.5<br>LCO 3.7.1<br>AC 5.8.2.24 |
| EC-1 | X | Air Dilution System | S 3.4.2.2 ASP Exp<br>S 3.4.2.5 Seismic | SS SSC EC | S 4.4.12 | 5.5.3.1 | LCO 3.3.1 |
| EC-2 | X | Air Dilution System Backup Air Receivers | S 3.4.2.2 ASP Exp<br>S 3.4.2.5 Seismic | SS SSC EC | S 4.4.12 | 5.5.3.1 | LCO 3.3.1 |
| EC-3 | X | Cell Design<br>• Alpha Strike Process<br>• East & West Caustic-Side Solvent Extraction Tank Cell<br>• Strip Effluent Hold Tank Cell<br>• Waste Transfer Enclosure | S 3.4.2.5 Seismic | SS SSC EC | S 4.4.7 | Table 5.8-2 | DF 6.0 |
| EC-4 | X | CR Design | S3.4.2.5 Seismic | SS SSC EC | S 4.4.6 | Table 5.8-2 | DF 6.0 |
| EC-5 | X | Drum Vent | No Applicable DBA | SS SSC EC | S 4.4.29 | Table 5.8-2 | DF 6.0 |
| EC-6 | X | Glovebox Design | No Applicable DBA | SS SSC EC | S 4.4.9 | Table 5.8-2 | DF 6.0 |

**Table 3.7-18. Accident Analysis Control Crosswalk (cont.)**

| Control # | 3.3 HA | Abbreviated Control Name | 3.4 DBA | DSA Disposition[A] | Chpt 4 Coverage | Chpt 5 Coverage | TSR Coverage |
|---|---|---|---|---|---|---|---|
| EC-7 | X | Grounding<br>• Alpha Strike Process<br>• Caustic-Side Solvent Extraction Vessels | S 3.4.2.1 Cell Fire<br>S 3.4.2.2 ASP Exp<br>S 3.4.2.5 Seismic | SS SSC EC | S 4.4.3 | Table 5.8-2 | DF 6.0 |
| EC-8 | X | High Efficiency Air Particulate Filters:<br>• Process Building Ventilation System<br>• Process Vessel Ventilation System<br>• Alpha Finishing Facility Ventilation System<br>• Cell Inlet | S 3.4.2.1 Cell Fire<br>S 3.4.2.3 AFF Exp<br>S 3.4.2.4 Aero | SS SSC EC | S 4.4.11 (PVVS)<br>S 4.4.13 (PBVS Exhaust & Cell Inlet)<br>S 4.4.16 (AFF) | 5.5.2.1<br>5.5.2.2<br>5.5.4.2<br>Table 5.8-2 | LCO 3.2.1<br>LCO 3.2.2<br>LCO 3.7.2<br>DF 6.0 |
| EC-9 | X | Hot Cell Design | S 3.4.2.5 Seismic | SS SSC EC | S 4.4.9 | Table 5.8-2 | DF 6.0 |
| EC-10 | X | Restrictive Flow Orifice | S 3.4.2.4 Aero | SS SSC EC | S 4.4.10 | Table 5.8-2 | DF 6.0 |
| EC-11.a | X | Safety Instrumented System:<br>• Glovebox 8 & 9 Low Vacuum Interlock | No Applicable DBA | SS SSC EC | S 4.4.17 (SIS)<br>S 4.4.20 (Glovebox and HC) | 5.5.4.4 | LCO 3.7.4 |
| EC-11.b | X | Safety Instrumented System:<br>• Hot Cell Low Vacuum Interlock | No Applicable DBA | SS SSC EC | S 4.4.17 (SIS)<br>S 4.4.20 (Glovebox and HC) | 5.5.2.4 | LCO 3.2.4 |

**Table 3.7-18. Accident Analysis Control Crosswalk (cont.)**

| Control # | 3.3 HA | Abbreviated Control Name | 3.4 DBA | DSA Disposition[A] | Chpt 4 Coverage | Chpt 5 Coverage | TSR Coverage |
|---|---|---|---|---|---|---|---|
| EC-11.c | X | Safety Instrumented System:<br>• Tank Temperature Interlocks | S 3.4.2.2 ASP Exp<br>S 3.4.2.3 AFF Exp<br>S 3.4.2.5 Seismic | SS SSC EC | S 4.4.17 (SIS)<br>S 4.4.18 (FFT-A and SSRT Temp)<br>S 4.4.19 (FFT-B Temp) | 5.5.1.3<br>5.5.4.3 | LCO 3.1.3<br>LCO 3.7.3 |
| EC-12 | X | Sample Line Design<br>Analytical Laboratory | S 3.4.2.5 Seismic | SS SSC EC | S 4.4.4 (partial) | Table 5.8-2 | DF 6.0 |
| EC-13 | X | Sump Drain Line Design<br>• Pump and Valve Gallery Sump Drain Lines<br>• Caustic-Side Solvent Extraction (contactor room, support floor chase, east & west CSSX tank cells)<br>• Hot Cell | S 3.4.2.5 Seismic | SS SSC EC | S 4.4.8 | Table 5.8-2 | DF 6.0 |
| EC-14 | X | Valve & Piping Design<br>• Pump and Valve Gallery | S 3.4.2.5 Seismic | SS SSC EC | S 4.4.4 (partial) | Table 5.8-2 | DF 6.0 |
| EC-15 | X | Ventilation System<br>• Analytical Laboratory Ventilation System - Process Building Ventilation System | No Applicable DBA | SS SSC EC | S 4.4.14 | Table 5.8-2 | DF 6.0 |
| EC-16 | X | Ventilation System<br>• Process Building Ventilation System | S 3.4.2.4 Aero | SS SSC EC | S 4.4.13 | 5.5.2.2 | LCO 3.2.2 |

**Table 3.7-18. Accident Analysis Control Crosswalk (cont.)**

| Control # | 3.3 HA | Abbreviated Control Name | 3.4 DBA | DSA Disposition[A] | Chpt 4 Coverage | Chpt 5 Coverage | TSR Coverage |
|---|---|---|---|---|---|---|---|
| EC-17 | X | Process Vessel & Piping Design<br>• Alpha Strike Process<br>• Caustic-Side Solvent Extraction (select vessels)<br>• Cross Flow Filter Shell | S 3.4.2.1 Cell Fire<br>S 3.4.2.5 Seismic | SS SSC EC | S 4.4.1 (partial)<br>S 4.4.4 | Table 5.8-2 | DF 6.0 |
| EC-18 | - | Process Vessel Overflow Lines | S 3.4.2.5 Seismic | SS SSC EC | S 4.4.2 | Table 5.8-2 | DF 6.0 |
| EC-19 | - | HEPA Filter – Hot Cell | No Applicable DBA | Elevated SS SSC EC- | S 4.4.14 | 5.5.2.3 | LCO 3.2.3 |
| EC-20 | - | Plant Air System Configuration | S 3.4.2.4 Aero<br>S 3.4.2.5 Seismic | Elevated SS SSC EC | S 4.4.10 | Table 5.8-2 | DF 6.0 |
| EC-21 | - | Air Pulse Agitator Configuration | S 3.4.2.4 Aero<br>S 3.4.2.5 Seismic | SS SSC EC | S 4.4.10 | Table 5.8-2 | DF 6.0 |
| EC-22 | - | Vessel Ventilation System - PVVS | S 3.4.2.5 Seismic | Elevated SS SSC EC | S 4.4.11 | Table 5.8-2 | DF 6.0 |
| EC-23 | X | AFF Ventilation System | No Applicable DBA | Elevated SS SSC EC | S 4.4.16 | 5.5.4.2 | LCO 3.7.2 |
| EC-24 | X | WTE Vent Line | No Applicable DBA | Elevated SS SSC EC | S 4.4.15 | Table 5.8-2 | DF 6.0 |
| AC-1 | X | Access Control | S 3.4.2.5 Seismic | SAC | S 4.5.12 | 5.5.5.3 | 5.8.3.11 |
| AC-2 | X | Manual Disconnect Switch | S 3.4.2.5 Seismic | SAC | S 4.4.30<br>S 4.5.8<br>S 4.5.9<br>S 4.5.10 | Table 5.8-2 | DF 6.0 |

**Table 3.7-18. Accident Analysis Control Crosswalk (cont.)**

| Control # | 3.3 HA | Abbreviated Control Name | 3.4 DBA | DSA Disposition[A] | Chpt 4 Coverage | Chpt 5 Coverage | TSR Coverage |
|---|---|---|---|---|---|---|---|
| AC-3 | X | Safety Management Program:<br>• Radiation Protection<br>• Industrial Hygiene/Occupational Safety | No Applicable DBA | SMP | Chapter 7<br>Chapter 8 | 5.5.5.2.1<br>5.5.5.2.4 | AC 5.8.2.1<br>AC 5.8.2.4 |
| AC-4 | X | Solvent Removal Program | S 3.4.2.3 AFF Exp<br>S 3.4.2.5 Seismic | SAC | S 4.5.4 | 5.5.5.3 | SAC 5.8.3.4 |
| AC-5.a | X | Standard Operating Procedure/Training:<br>• Control Operator*<br>• Drain/Flush* | No Applicable DBA | SAC | S 4.5.11 | 5.5.5.3 | SAC 5.8.3.10 |
| AC-5.b | X | Standard Operating Procedure/Training:<br>• Control Operator<br>  ○ APA Isolation | -S 3.4.2.4 Aero | SAC | S 4.5.13 | 5.5.5.3 | SAC 5.8.3.12 |
| AC-5.c | X | Standard Operating Procedure/Training:<br>• Caustic-Side Solvent Extraction Contactor Change-out<br>• Hoisting and Rigging<br>• Analytical Laboratory Operations<br>• Preventive/Scheduled Maintenance | No Applicable DBA | AC | Not Applicable | 5.5.5.1 | 5.8.1.1 |
| AC-7 | - | Ignition Source Control Program | S 3.4.2.1 Cell Fire<br>S 3.4.2.2 ASP Exp | SAC | S 4.5.3 | 5.5.5.3 | SAC 5.8.3.3 |

**Table 3.7-18. Accident Analysis Control Crosswalk (cont.)**

| Control # | 3.3 HA | Abbreviated Control Name | 3.4 DBA | DSA Disposition[A] | Chpt 4 Coverage | Chpt 5 Coverage | TSR Coverage |
|---|---|---|---|---|---|---|---|
| AC-8 | - | Flammability Control Program | S 3.4.2.2 ASP Exp | AC | Not Applicable | 5.5.5.2.19 | 5.8.2.20 |
| AC-9 | - | Draining Slurried Solids from FFT-B/MSTT to AFDT | S 3.4.2.3 AFF Exp | SAC | S 4.5.7 | 5.5.5.3 | SAC 5.8.3.7 |
| AC-10 | - | Seismic Event Response | S 3.4.2.5 Seismic | SAC | S 4.5.9 | 5.5.5.3 | SAC 5.8.3.8 |
| AC-11 | - | High Temperature in the FFT-A or SSRT | S 3.4.2.2 ASP Exp | SAC | S 4.5.10 | 5.5.5.3 | SAC 5.8.3.9 |
| *partial – portions of the referenced section cover the control | | | | | | | |

**Table 3.7-19. Radiological Evaluation Basis Contents for Consequences Estimates**

| Vessel | Baseline | Full Vessel | Limited Volume/High Concentration[1] |
|---|---|---|---|
| AST-A (TK-101) | Stream 103[2] (Feed to FFT-A [TK-102]) taken from the (Single Strike) analysis | 3 batches of 18 wt% solids with Stream Tank Farm Feed liquid to fill AST-A (TK-101) to the overflow | NA |
| FFT-A (TK-102) | Stream 103 batch (FFT-A [TK-102] feed batch liquid) plus 10 Single Batches of 18 wt% solids is used to fill FFT-A (TK-102) to overflow | Stream 103 batch (FFT-A [TK-102] feed batch liquid ) plus 10 Single Batches of 18 wt% solids is used to fill FFT-A (TK-102) to overflow | 10 batches of 18 wt% solids waste |
| SSRT (TK-104) | 10 batches of 18 wt % solids waste | Stream 103 batch (FFT-A [TK-102] feed batch liquid ) plus 10 Single Batches of 18 wt% solids is used to fill SSRT (TK-104) to overflow | 10 batches of 18 wt% solids waste |
| SSFT (TK-109) | Regular feed from CFFs filled to the overflow | Missed MST Strike (in AST-A [TK-101]) liquid only passes through CFF | 10 batches of 18 wt% solids minus the holdup volume in the cross-flow filter loop plus the heel volume in the SSFT (TK-109) |
| SAST (TK-127) | Negligible | AST-A (TK-101) (before MST Strike, including solids) fills to overflow | 10 batches of 18 wt% solids waste from FFT-A (TK-102) |
| WWHT (TK-105) | CFF output stream to overflow | 10 batches of 18 wt% solids waste from SSRT (TK-104) with cross-flow filter stream to overflow | 10 batches of 18 wt% solids waste from SSRT (TK-104) minus the cross-flow filter loop volume |
| CSDT-A (TK-103) | One CFF volume of 18 wt % solids waste with CSDT-A (TK-103) filled to overflow with process water | 18 wt % solids waste from SSRT (TK-104) or FFT-A (TK-102) to overflow | NA |
| ASDT (TK-601) | ASDT (TK-601) output stream to overflow | 10 batches of 18 wt% solids waste from FFT-A (TK-102) and ASDT (TK-601) output stream to overflow | 10 batches of 18 wt% solids waste from FFT-A (TK-102) |
| CSSX Extraction Stages | CSSX Extraction stages inlet stream (Double Strike values) | Missed MST Strike Stream in SSFT (TK-109) ("liquid" Feed from the tank farm adjusted for volume additions) without solids | The Tank Farm feed (including the solids) diluted for the additions in AST-A (TK-101) (No MST addition) to overflow. Addresses solids, which pass through CFF |
| CSSX Scrub and Stripping Stages | Double Strike Organic Extract Effluent Stream 202 (17.4 Ci/gal – Cs-137) | NA | NA |

**Table 3.7-19. Radiological Evaluation Basis Contents for Consequences Estimates (cont.)**

| Vessel | Baseline | Full Vessel | Limited Volume/High Concentration[1] |
|---|---|---|---|
| CSSX Caustic Wash Contactors | Double Strike Organic Extract Effluent Stream 202 (17.4 Ci/gal - $^{137}$Cs) | NA | NA |
| CSSX Stripping Stage (Recovery from Solvent Emulsion in SEHT [TK-205]) | Stream 214 SEHT (TK-205) liquid with 82 Ci/gal – $^{137}$Cs | NA | NA |
| Solvent Strip Feed Tank (TK-217) | Double Strike Organic Extract Effluent Stream 202 (17.4 Ci/gal - $^{137}$Cs) | NA | NA |
| BDT (TK-206) | CSSX Extraction Output with no Cs removed by contactors | CSSX Extraction Output (Missed MST Strike in AST-A [TK-101]) with no Cs removed by contactors | NA |
| DSS Coalescer (TK-201) | DSS from BDT (TK-206) with $^{137}$Cs set equal to 0.1 Ci/gal | Output of the BDT (TK-206) (Missed MST Strike in AST-A [TK-101]) batch volume with DSS from BDT (TK-206) to overflow with $^{137}$Cs set equal to 0.1 Ci/gal | NA |
| DSS Stilling Tank (TK-211) | CSSX Extraction Output with no Cs removed by contactors | CSSX Extraction Output (Missed MST Strike in AST-A [TK-101]) with no Cs removed by contactors | NA |
| SEHT (TK-205) | Aqueous Effluent from Stripping Stages with 82 Ci/gal inserted for higher concentration (91.2 Ci/gal) $^{137}$Cs filled to overflow. | NA | NA |
| Strip Effluent Stilling Tank (TK-212) | Aqueous Effluent from Stripping Stages (91.2 Ci/gal $^{137}$Cs) to overflow. | NA | NA |
| Strip Effluent Coalescer (TK-203) | Aqueous Effluent from Stripping Stages (91.2 Ci/gal $^{137}$Cs) to overflow. | NA | NA |

**Table 3.7-19. Radiological Evaluation Basis Contents for Consequences Estimates (cont.)**

| Vessel | Baseline | Full Vessel | Limited Volume/High Concentration[1] |
|---|---|---|---|
| Strip Effluent Pump Tank | Aqueous Effluent from Stripping Stages (91.2 Ci/gal $^{137}Cs$) to overflow. | NA | NA |
| Solvent Drain Tank (TK-208) | Solvent recovery mixture from Aqueous stream to SEHT (TK-205) (Regular Strip Effluent Coalescer (TK-203) or Strip Effluent Stilling Tank (TK-212) drain to Solvent Drain Tank [TK-208]) | Aqueous Effluent from Stripping Stages (91.2 Ci/gal $^{137}Cs$) to overflow from Aqueous Effluent to SEHT (TK-205) or CSSX tank cell or P&VG sump drains. | NA |
| SHT (TK-202) | Solvent mixture recovered in solvent recovery from DSS after Extraction Process, from Double Strike Data | Backup of DSS (after solvent Extraction with Missed MST Strike in AST-A [TK-101]) | Double Strike Organic Extract Effluent Stream 202 (17.4 Ci/gal - $^{137}Cs$) to overflow |
| Caustic Wash Tank | Negligible radionuclide Inventory | Double Strike Organic Extract Effluent Stream 202 (17.4 Ci/gal - $^{137}Cs$) to overflow | NA |
| IST (TK-220) | DSS from BDT (TK-206) with $^{137}Cs$ set equal to 0.1 Ci/gal | Output of the BDT (TK-206) (Missed MST Strike in AST-A [TK-101]) batch volume with DSS from BDT (TK-206) to overflow with $^{137}Cs$ set equal to 0.1 Ci/gal | NA |
| AST-B (TK-221) | DSS from BDT (TK-206) for second strike with MST added and $^{137}Cs$ set equal to 0.1 Ci/gal for liquids | 2 batches of 10.00 wt% solids and 1 batches of 10.08 wt% solids (Missed MST Strike in AST-A [TK-101]) with AST-B (TK-221) to FFT-B (TK-222) liquid to fill AST-A (TK-101) to the overflow and $^{137}Cs$ set equal to 0.1 Ci/gal for all liquids | NA |

**Table 3.7-19. Radiological Evaluation Basis Contents for Consequences Estimates (cont.)**

| Vessel | Baseline | Full Vessel | Limited Volume/High Concentration[1] |
|---|---|---|---|
| FFT-B (TK-222) | 10 batches of 10.00 wt% solids waste with AST-B (TK-221) to FFT-B (TK-222) liquid to fill to overflow and $^{137}$Cs set equal to 0.1 Ci/gal for all liquids | 9 batches of 10.00 wt% solids waste and 1 batches of 10.08 wt% solids waste (Missed MST Strike in AST-A [TK-101]) with AST-B (TK-221) to FFT-B (TK-222) liquid to fill to overflow and $^{137}$Cs set equal to 0.1 Ci/gal for all liquids | A. 6 batches of 10.00 wt% solids waste and 1 batches of 10.08 wt% solids waste (Missed MST Strike in AST-A [TK-101]) for a combined 10.01 wt% solids with $^{137}$Cs set equal to 0.1 Ci/gal for all liquids<br>B. 9 batches of 10.00 wt% solids waste and 1 batches of 10.08 wt% solids waste (Missed MST Strike in AST-A [TK-101]) for a combined 10.01 wt% solids with $^{137}$Cs set equal to 0.1 Ci/gal for all liquids |
| DSSHT (TK-207) | DSS from BDT (TK-206) with $^{137}$Cs set equal to 0.1 Ci/gal for all liquids | Output of the Barium Decay Tank (Missed MST Strike in AST-A [TK-101]) batch volume with DSS from BDT (TK-206) to overflow with $^{137}$Cs set equal to 0.1 Ci/gal for all liquids | NA |
| MSTT (TK-224) | 7 batches of 10.00 wt% solids waste with AST-B (TK-221) to FFT-B (TK-222) liquid to fill to overflow and $^{137}$Cs set equal to 0.1 Ci/gal for all liquids | 9 batches of 10.00 wt% solids waste and 1 batches of 10.08 wt% solids waste (Missed MST Strike in AST-A [TK-101]) for a combined 10.01 wt% solids with AST-B (TK-221) to FFT-B (TK-222) liquid to fill to overflow and $^{137}$Cs set equal to 0.1 Ci/gal for all liquids | A. 6 batches of 10.00 wt% solids waste and 1 batches of 10.08 wt% solids waste (Missed MST Strike in AST-A [TK-101]) for a combined 10.01 wt% solids with $^{137}$Cs set equal to 0.1 Ci/gal for all liquids<br>B. 9 batches of 10.00 wt% solids waste and 1 batches of 10.08 wt% solids waste (Missed MST Strike in AST-A [TK-101]) for a combined 10.01 wt% solids with $^{137}$Cs set equal to 0.1 Ci/gal for all liquids |
| CSDT-B (TK-223) | One CFF volume of 10.00 wt% solids waste with CSDT-A (TK-103) filled to overflow with process water | 10 batches 10.00 wt% solids waste from FFT-B (TK-222) with liquid (AST-B [TK-221] to FFT-B [TK-222]) to overflow and $^{137}$Cs set equal to 0.1 Ci/gal for all liquids | NA |

**Table 3.7-19. Radiological Evaluation Basis Contents for Consequences Estimates (cont.)**

| Vessel | Baseline | Full Vessel | Limited Volume/High Concentration[1] |
|---|---|---|---|
| AFDT (TK-228) | Negligible | 10 batches 10.00 wt% solids waste from FFT-B (TK-222) with liquid (AST-B [TK-221] to FFT-B [TK-222]) to overflow and $^{137}Cs$ set equal to 0.1 Ci/gal for all liquids | NA |
| Lab Drain Tank (TK-235) | Lab Drain Tank (TK-235) output stream to overflow | A. Aqueous Effluent from SEHT (TK-205) (82 Ci/gal $^{137}Cs$ concentration) to overflow<br>B. 18 wt% solids waste from SSRT (TK-104) or FFT-A (TK-102) to overflow | NA |

Notes:

1. These inventories with higher radionuclide concentrations, but lower total liquid volumes, were used for aerosolization and time to CLFL cases to ensure bounding results.
2. Stream numbers correspond to the designators used in P-SAR-J-00001[18].

**Table 3.7-20. Hazard Analysis Events with High Consequences to the Onsite-2 Receptor**

| Event Number | Event Description | Cause Description | Disposition | SWPF Representative DBA |
|---|---|---|---|---|
| ASP-32 | Aerosolization from APA system impingement - multiple causes | Failure of APA results in the impingement of an air jet on the liquid surface due to control operator error; | Bounding APA Air Jet Aerosolization event has the potential to exceed the TOC to Onsite-2 receptor per analysis documented in S-CLC-J-00027, *Pulse Jet Mixer Air Jet Aerosolization Event Accident Analysis Events*. Grouped with ASP APA Air Jet Aerosolization DBA. | ASP APA Air Jet Aerosolization |
| ASP-33 | Aerosolization from APA system impingement - multiple causes | Failure of APA results in the impingement of an air jet on the liquid surface due to BPCS failure | Bounding APA Air Jet Aerosolization event has the potential to exceed the TOC to Onsite-2 receptor per analysis documented in S-CLC-J-00027, *Pulse Jet Mixer Air Jet Aerosolization Event Accident Analysis Events*. Grouped with ASP APA Air Jet Aerosolization DBA. | ASP APA Air Jet Aerosolization |
| ASP-34 | Aerosolization from APA system impingement - multiple causes | Failure of APA results in the impingement of an air jet on the liquid surface due to loss of power to APA system; | Bounding APA Air Jet Aerosolization event has the potential to exceed the TOC to Onsite-2 receptor per analysis documented in S-CLC-J-00027, *Pulse Jet Mixer Air Jet Aerosolization Event Accident Analysis Events*. Grouped with ASP APA Air Jet Aerosolization DBA. | ASP APA Air Jet Aerosolization |
| ASP-35 | Aerosolization from APA system impingement - multiple causes | Failure of APA results in the impingement of an air jet on the liquid surface due to loss of APA mechanical system; | Bounding APA Air Jet Aerosolization event has the potential to exceed the TOC to Onsite-2 receptor per analysis documented in S-CLC-J-00027, *Pulse Jet Mixer Air Jet Aerosolization Event Accident Analysis Events*. Grouped with ASP APA Air Jet Aerosolization DBA. | ASP APA Air Jet Aerosolization |

**Table 3.7-20. Hazard Analysis Events with High Consequences to the Onsite-2 Receptor (cont.)**

| Event Number | Event Description | Cause Description | Disposition | SWPF Representative DBA |
|---|---|---|---|---|
| ASP-36 | Aerosolization from APA system impingement - multiple causes | Misalignment of APA such that its lower discharge nozzle is above the liquid surface results in the impingement of an air jet on the liquid surface due to system malfunction; | Bounding APA Air Jet Aerosolization event has the potential to exceed the TOC to Onsite-2 receptor per analysis documented in S-CLC-J-00027, *Pulse Jet Mixer Air Jet Aerosolization Event Accident Analysis Events*. Grouped with ASP APA Air Jet Aerosolization DBA. | ASP APA Air Jet Aerosolization |
| ASP-37 | Aerosolization from APA system impingement - multiple causes | Low tank volume such that the APA lower discharge nozzle is above the liquid surface results in the impingement of an air jet on the liquid surface; low tank volume due to control operator error; | Bounding APA Air Jet Aerosolization event has the potential to exceed the TOC to Onsite-2 receptor per analysis documented in S-CLC-J-00027, *Pulse Jet Mixer Air Jet Aerosolization Event Accident Analysis Events*. Grouped with ASP APA Air Jet Aerosolization DBA. | ASP APA Air Jet Aerosolization |
| ASP-38 | Aerosolization from APA system impingement - multiple causes | Low tank volume such that the APA lower discharge nozzle is above the liquid surface results in the impingement of an air jet on the liquid surface; low tank volume due to BPCS failure; | Bounding APA Air Jet Aerosolization event has the potential to exceed the TOC to Onsite-2 receptor per analysis documented in S-CLC-J-00027, *Pulse Jet Mixer Air Jet Aerosolization Event Accident Analysis Events*. Grouped with ASP APA Air Jet Aerosolization DBA. | ASP APA Air Jet Aerosolization |
| ASP-39 | Aerosolization from APA system impingement - multiple causes | Low tank volume such that the APA lower discharge nozzle is above the liquid surface results in the impingement of an air jet on the liquid surface; low tank volume due to process leak/spill; | Bounding APA Air Jet Aerosolization event has the potential to exceed the TOC to Onsite-2 receptor per analysis documented in S-CLC-J-00027, *Pulse Jet Mixer Air Jet Aerosolization Event Accident Analysis Events*. Grouped with ASP APA Air Jet Aerosolization DBA. | ASP APA Air Jet Aerosolization |

**Table 3.7-20. Hazard Analysis Events with High Consequences to the Onsite-2 Receptor (cont.)**

| Event Number | Event Description | Cause Description | Disposition | SWPF Representative DBA |
|---|---|---|---|---|
| ASP-40 | Aerosolization from APA system impingement - multiple causes | Misaligned mixer valve such that the nozzle is not below the liquid surface generates a liquid jet when the liquid in the mixer is expelled by the air pulse; | Bounding APA Air Jet Aerosolization event has the potential to exceed the TOC to Onsite-2 receptor per analysis documented in S-CLC-J-00027, *Pulse Jet Mixer Air Jet Aerosolization Event Accident Analysis Events*. Grouped with ASP APA Air Jet Aerosolization DBA. | ASP APA Air Jet Aerosolization |
| ASP-41 | Aerosolization from APA system impingement - multiple causes | Independent of mechanism - aerosolization from APA system - assume goes through PVVS | Bounding APA Air Jet Aerosolization event has the potential to exceed the TOC to Onsite-2 receptor per analysis documented in S-CLC-J-00027, *Pulse Jet Mixer Air Jet Aerosolization Event Accident Analysis Events*. Grouped with ASP APA Air Jet Aerosolization DBA. | ASP APA Air Jet Aerosolization |
| ASP-42 | Aerosolization from APA system impingement - multiple causes | Independent of mechanism - aerosolization from APA system overblows into Sump Draining Lines with release into cell - assume goes through PBVS from in cell release | Bounding APA Air Jet Aerosolization event has the potential to exceed the TOC to Onsite-2 receptor per analysis documented in S-CLC-J-00027, *Pulse Jet Mixer Air Jet Aerosolization Event Accident Analysis Events*. Grouped with ASP APA Air Jet Aerosolization DBA. | ASP APA Air Jet Aerosolization |
| ASP-79 | Hydrogen gas from radiolysis with ignition results in vessel fire | ASP generates hydrogen gas from radiolysis which builds up in ASP vessels; independent of ignition source and oxygen availability, resulting fire/deflagration causes release of radiological material; | Bounding ASP Process Vessel Explosion event assumes detonation rather than deflagration in process vessel resulting in higher consequences than just a fire/deflagration. Bounding ASP Process Vessel Explosion event has the potential to exceed the TOC to Onsite-2 receptor per analysis documented in S-CLC-J-00054, *Accident Analysis of Explosion Events*. Grouped with ASP Process Vessel Explosion DBA. | ASP Process Vessel Explosion |

**Table 3.7-20. Hazard Analysis Events with High Consequences to the Onsite-2 Receptor (cont.)**

| Event Number | Event Description | Cause Description | Disposition | SWPF Representative DBA |
|---|---|---|---|---|
| ASP-84 | Hydrogen gas from radiolysis with ignition results in explosion | ASP generates hydrogen gas from radiolysis which builds up in ASP vessels solids; independent of ignition source and oxygen availability, resulting explosion causes release of radiological material; assumes normal operation of other systems (e.g., mixing, ventilation, etc.) | Bounding ASP Process Vessel Explosion event has the potential to exceed the TOC to Onsite-2 receptor per analysis documented in S-CLC-J-00054, *Accident Analysis of Explosion Events*. Grouped with ASP Process Vessel Explosion DBA. | ASP Process Vessel Explosion |
| ASP-96 | Process pump overheats process stream | Process pumps overheat process to greater than flammable temperature of organics with subsequent fire/deflagration (independent of ignition); release of radiological material; equipment failure | Bounding ASP Process Vessel Explosion event assumes detonation rather than deflagration in process vessel resulting in higher consequences than just a fire/deflagration. Bounding ASP Process Vessel Explosion event has the potential to exceed the TOC to Onsite-2 receptor per analysis documented in S-CLC-J-00054, *Accident Analysis of Explosion Events*. Grouped with ASP Process Vessel Explosion DBA. | ASP Process Vessel Explosion |
| ASP-97 | Process pump overheats process stream | Process pumps overheat process to greater than flammable temperature of organics with subsequent explosion (independent of ignition); release of radiological material; equipment failure | Bounding ASP Process Vessel Explosion event has the potential to exceed the TOC to Onsite-2 receptor per analysis documented in S-CLC-J-00054, *Accident Analysis of Explosion Events*. Grouped with ASP Process Vessel Explosion DBA. | ASP Process Vessel Explosion |

**Table 3.7-20. Hazard Analysis Events with High Consequences to the Onsite-2 Receptor (cont.)**

| Event Number | Event Description | Cause Description | Disposition | SWPF Representative DBA |
|---|---|---|---|---|
| ASP-103 | Overheating of incoming WTE piping from nearby fire | Fire initiates in nearby/connected areas (i.e., labyrinth, CSSX cell) causes overheating of process stream in WTE; with radiological release from overpressure - assume cell fire | Bounded in consequences by Process Cell Fire involving material leaked from ASP Process Vessel into Process Cell along with solvent and ignited. Bounding ASP Process Cell Fire event has the potential to exceed TOC to Onsite-2 receptor per analysis documented in S-CLC-J-00041, *SWPF Fire Radiological Consequence Analysis (U)*. Grouped with ASP Process Cell Fire DBA. | Process Vessel Cell Fire |
| ASP-105 | Overheating of ASP process vessel/piping from nearby fire | Fire initiates in nearby/connected areas (i.e., labyrinth, CSSX cell) causes overheating of process stream in ASP vessels/piping; with radiological release from overpressure - assume cell fire | Bounded in consequences by Process Cell Fire involving material leaked from ASP Process Vessel into Process Cell along with solvent and ignited. Bounding ASP Process Cell Fire event has the potential to exceed TOC to Onsite-2 receptor per analysis documented in S-CLC-J-00041, *SWPF Fire Radiological Consequence Analysis (U)*. Grouped with ASP Process Cell Fire DBA. | Process Vessel Cell Fire |
| ASP-108 | Hydrogen gas from radiolysis with ignition results in fire | Solids accumulate in process vessels leading to the retention of hydrogen in the unmixed waste volume which releases rapidly and the concentration of flammable gas in the vessel headspace exceeds the lower flammability limit (LFL) ignites causing fire/deflagration | Trapped gas vessel explosion event. Because the consequences for trapped gas vessel explosion events are independent of the fact of trapped gas, this event's consequences are identical to Bounding ASP Process Vessel Explosion event. Bounding ASP Process Vessel Explosion event has the potential to exceed the TOC to Onsite-2 receptor per analysis documented in S-CLC-J-00054, *Accident Analysis of Explosion Events*. Grouped with ASP Process Vessel Explosion DBA. | ASP Process Vessel Explosion |

**Table 3.7-20. Hazard Analysis Events with High Consequences to the Onsite-2 Receptor (cont.)**

| Event Number | Event Description | Cause Description | Disposition | SWPF Representative DBA |
|---|---|---|---|---|
| ASP-109 | Hydrogen gas from radiolysis with ignition results in explosion - normal operation | Solids accumulate in process vessels leading to the retention of hydrogen in the unmixed waste volume which releases rapidly and the concentration of flammable gas in the vessel headspace exceeds the lower flammability limit (LFL) ignites and detonates | Trapped gas vessel explosion event. Because the consequences for trapped gas vessel explosion events are independent of the fact of trapped gas, this event's consequences are identical to Bounding ASP Process Vessel Explosion event. Bounding ASP Process Vessel Explosion event has the potential to exceed the TOC to Onsite-2 receptor per analysis documented in S-CLC-J-00054, *Accident Analysis of Explosion Events*. Grouped with ASP Process Vessel Explosion DBA. | ASP Process Vessel Explosion |
| ASP-110 | Hydrogen gas from radiolysis with ignition results in fire | Solids accumulate in process vessels as a result of inadequate mixing, leading to the retention of hydrogen in the unmixed waste volume which releases rapidly and the concentration of flammable gas in the vessel headspace exceeds the lower flammability limit (LFL) ignites causing fire/deflagration | Trapped gas vessel explosion event. Because the consequences for trapped gas vessel explosion events are independent of the fact of trapped gas, this event's consequences are identical to Bounding ASP Process Vessel Explosion event. Bounding ASP Process Vessel Explosion event has the potential to exceed the TOC to Onsite-2 receptor per analysis documented in S-CLC-J-00054, *Accident Analysis of Explosion Events*. Grouped with ASP Process Vessel Explosion DBA. | ASP Process Vessel Explosion |

**Table 3.7-20. Hazard Analysis Events with High Consequences to the Onsite-2 Receptor (cont.)**

| Event Number | Event Description | Cause Description | Disposition | SWPF Representative DBA |
|---|---|---|---|---|
| ASP-111 | Hydrogen gas from radiolysis with ignition results in explosion - TAP not effective/working | Solids accumulate in process vessels as a result of inadequate mixing, leading to the retention of hydrogen in the unmixed waste volume which releases rapidly and the concentration of flammable gas in the vessel headspace exceeds the lower flammability limit (LFL) ignites and detonates - TAP/APA or TAP/MA not working | Trapped gas vessel explosion event. Because the consequences for trapped gas vessel explosion events are independent of the fact of trapped gas, this event's consequences are identical to Bounding ASP Process Vessel Explosion event. Bounding ASP Process Vessel Explosion event has the potential to exceed the TOC to Onsite-2 receptor per analysis documented in S-CLC-J-00054, *Accident Analysis of Explosion Events*. Grouped with ASP Process Vessel Explosion DBA. | ASP Process Vessel Explosion |
| ASP-112 | Hydrogen gas from radiolysis with ignition results in fire | Flammable gases collect in process piping and ancillary vessels greater than the LFL ignites (fire) which initiates a vessel spill or pipe spray release. | Analysis documented in calculation S-CLC-J-00137, *Pipe Length Required to Support Explosions with Significant Consequences*, determined that explosions that originate in piping cannot generate radiological consequences to the Onsite-2 receptor of 100 rem. Therefore, the consequences of this event to the Onsite-2 receptor are not High and this event is not considered as a representative DBA. | N/A |
| ASP-113 | Process stream leak into cell with subsequent fire - cell fire | Process stream leaks into process cell with residual solvent fire. | Bounding ASP Process Cell Fire event has the potential to exceed TOC to Onsite-2 receptor per analysis documented in S-CLC-J-00041, *SWPF Fire Radiological Consequence Analysis (U)*. Grouped with ASP Process Cell Fire DBA. | Process Vessel Cell Fire |

**Table 3.7-20. Hazard Analysis Events with High Consequences to the Onsite-2 Receptor (cont.)**

| Event Number | Event Description | Cause Description | Disposition | SWPF Representative DBA |
|---|---|---|---|---|
| ASP-114 | Process stream leak into cell with subsequent fire - cell fire | Process stream leaks into process cell with residual solvent fire. | Bounding ASP Process Cell Fire event has the potential to exceed TOC to Onsite-2 receptor per analysis documented in S-CLC-J-00041, *SWPF Fire Radiological Consequence Analysis (U)*. Grouped with ASP Process Cell Fire DBA. | Process Vessel Cell Fire |
| ASP-116 | Seismic | NPH causes damage and release to vessels/piping. | This event is the occurrence of spills/pressurized leaks as the result of damage to piping and vessels from a seismic event. This scenario is addressed in the bounding seismic event for SWPF. Bounding Seismic event has the potential to exceed the TOC to Onsite-2 receptor per analysis documented in S-CLC-J-00084, *Radiological Consequences of a Seismic Event at SWPFs*. Grouped with Seismic Event DBA. | Seismic Event |
| ASP-130 | Damage/loss to PVVS | Assumes explosion event with build up above LFL; assumes PVVS/PVVS - HEPA filter does not survive if explosive event not prevented - POST SEISMIC SUBSEQUENT EXPLOSION EVENT | This event is the occurrence of explosion in process vessel after loss of PVVS due to NPH event. This scenario is addressed in the bounding seismic event for SWPF. Bounding Seismic event has the potential to exceed the TOC to Onsite-2 receptor per analysis documented in S-CLC-J-00084, *Radiological Consequences of a Seismic Event at SWPFs*. Grouped with Seismic Event DBA. | Seismic Event |

**Table 3.7-20. Hazard Analysis Events with High Consequences to the Onsite-2 Receptor (cont.)**

| Event Number | Event Description | Cause Description | Disposition | SWPF Representative DBA |
|---|---|---|---|---|
| ASP-132 | Damage/loss to PAS | Assumes explosion event with build up above LFL; assumes PVVS/PVVS - HEPA filter does not survive if explosive event not prevented - POST SEISMIC SUBSEQUENT EXPLOSION EVENT | This event is the occurrence of explosion in process vessel after loss of PAS due to NPH event. This scenario is addressed in the bounding seismic event for SWPF. Bounding Seismic event has the potential to exceed the TOC to Onsite-2 receptor per analysis documented in S-CLC-J-00084, *Radiological Consequences of a Seismic Event at SWPFs*. Grouped with Seismic Event DBA. | Seismic Event |
| ASP-133 | Damage/loss to PAS - APA | Assumes explosion event with build up above LFL; assumes PVVS/PVVS HEPA filter does not survive if explosive event not prevented - POST SEISMIC SUBSEQUENT EXPLOSION EVENT | This event is the occurrence of explosion in process vessel after loss of vessel mixing due to NPH event. Trapped gas vessel explosion event. Because the consequences for trapped gas vessel explosion events are independent of the fact of trapped gas, this event's consequences are identical non-trapped gas process vessel explosion event. This scenario is addressed in the bounding seismic event for SWPF. Bounding Seismic event has the potential to exceed the TOC to Onsite-2 receptor per analysis documented in S-CLC-J-00084, *Radiological Consequences of a Seismic Event at SWPFs*. Grouped with Seismic Event DBA. | Seismic Event |

**Table 3.7-20. Hazard Analysis Events with High Consequences to the Onsite-2 Receptor (cont.)**

| Event Number | Event Description | Cause Description | Disposition | SWPF Representative DBA |
|---|---|---|---|---|
| ASP-134 | Damage/loss to PAS - ADS | Assumes explosion event with build up above LFL; assumes PVVS/PVVS HEPA filter does not survive if event not prevented - POST SEISMIC SUBSEQUENT EXPLOSION EVENT | This event is the occurrence of explosion in process vessel after loss of PAS and ADS due to NPH event. This scenario is addressed in the bounding seismic event for SWPF. Bounding Seismic event has the potential to exceed the TOC to Onsite-2 receptor per analysis documented in S-CLC-J-00084, *Radiological Consequences of a Seismic Event at SWPFs*. Grouped with Seismic Event DBA. | Seismic Event |
| ASP-135 | Damage/loss to ADS - BAR | Assumes explosion event with build up above LFL; ADS - BAR survives NPH event - POST SEISMIC SUBSEQUENT EXPLOSION EVENT | This event is the occurrence of explosion in process vessel after loss of ADS due to NPH event. This scenario is addressed in the bounding seismic event for SWPF. Bounding Seismic event has the potential to exceed the TOC to Onsite-2 receptor per analysis documented in S-CLC-J-00084, *Radiological Consequences of a Seismic Event at SWPFs*. Grouped with Seismic Event DBA. | Seismic Event |

**Table 3.7-20. Hazard Analysis Events with High Consequences to the Onsite-2 Receptor (cont.)**

| Event Number | Event Description | Cause Description | Disposition | SWPF Representative DBA |
|---|---|---|---|---|
| ASP-136 | Damage/loss to PMVS | Assumes explosion event with build up above LFL; assumes PVVS/PVVS HEPA filter does not survive if event not prevented; results in loss of PAS - APA as well - POST SEISMIC SUBSEQUENT EXPLOSION EVENT | This event is the occurrence of explosion in process vessel after loss of vessel mixing due to NPH event. Trapped gas vessel explosion event. Because the consequences for trapped gas vessel explosion events are independent of the fact of trapped gas, this event's consequences are identical non-trapped gas process vessel explosion event. This scenario is addressed in the bounding seismic event for SWPF. Bounding Seismic event has the potential to exceed the TOC to Onsite-2 receptor per analysis documented in S-CLC-J-00084, *Radiological Consequences of a Seismic Event at SWPFs*. Grouped with Seismic Event DBA. | Seismic Event |
| ASP-138 | Damage/loss to multiple systems | Potential material release - aerosolization | This event is the occurrence of aerosolization as the result of damage to multiple systems from a seismic event. This scenario is addressed in the bounding seismic event for SWPF. Bounding Seismic event has the potential to exceed the TOC to Onsite-2 receptor per analysis documented in S-CLC-J-00084, *Radiological Consequences of a Seismic Event at SWPFs*. Grouped with Seismic Event DBA. | Seismic Event |

**Table 3.7-20. Hazard Analysis Events with High Consequences to the Onsite-2 Receptor (cont.)**

| Event Number | Event Description | Cause Description | Disposition | SWPF Representative DBA |
|---|---|---|---|---|
| ASP-139 | Damage/loss to multiple systems | Assumes explosion event with build up above LFL; assumes PVVS/PVVS HEPA filter does not survive if explosive event not prevented - POST SEISMIC SUBSEQUENT EXPLOSION EVENT | This event is the occurrence of explosion in process vessel after loss of multiple flammability control systems due to NPH event. This scenario is addressed in the bounding seismic event for SWPF. Bounding Seismic event has the potential to exceed the TOC to Onsite-2 receptor per analysis documented in S-CLC-J-00084, *Radiological Consequences of a Seismic Event at SWPFs*. Grouped with Seismic Event DBA. | Seismic Event |
| ASP-140 | Damage/loss to building power systems | Assumes explosion event with build up above LFL - POST SEISMIC SUBSEQUENT EXPLOSION EVENT | This event is the occurrence of explosion in process vessel after loss of electric power systems due to NPH event. This scenario is addressed in the bounding seismic event for SWPF. Bounding Seismic event has the potential to exceed the TOC to Onsite-2 receptor per analysis documented in S-CLC-J-00084, *Radiological Consequences of a Seismic Event at SWPFs*. Grouped with Seismic Event DBA. | Seismic Event |
| ASP-141 | Damage/loss to BPCS | Assumes explosion event with build up above LFL; assumes PVVS/PVVS HEPA filter does not survive if explosive event not prevented - POST SEISMIC SUBSEQUENT EXPLOSION EVENT | This event is the occurrence of explosion in process vessel after loss of BPCS due to NPH event. This scenario is addressed in the bounding seismic event for SWPF. Bounding Seismic event has the potential to exceed the TOC to Onsite-2 receptor per analysis documented in S-CLC-J-00084, *Radiological Consequences of a Seismic Event at SWPFs*. Grouped with Seismic Event DBA. | Seismic Event |

**Table 3.7-20. Hazard Analysis Events with High Consequences to the Onsite-2 Receptor (cont.)**

| Event Number | Event Description | Cause Description | Disposition | SWPF Representative DBA |
|---|---|---|---|---|
| P&VG-270 | Seismic | Seismic causes impacts to equipment and potential fire/explosion | This event is the occurrence of fire or explosion in P&VG labyrinth after damage to equipment due to seismic event. This scenario is addressed in the bounding seismic event for SWPF. Bounding Seismic event has the potential to exceed the TOC to Onsite-2 receptor per analysis documented in S-CLC-J-00084, *Radiological Consequences of a Seismic Event at SWPFs*. Grouped with Seismic Event DBA. | Seismic Event |
| P&VG-282 | Damage/loss to PBVS | No immediate release. | This event is the loss of the PBVS as the result of an NPH event. The loss of PBVS by itself does not result in the release of any significant amount of radiological material so the consequences to the Onsite-2 receptor of this event by itself are not expected to challenge the TOC. Therefore, the consequences of this event to the Onsite-2 receptor are not High and this event is not considered as a representative DBA. | N/A |
| P&VG-283 | Damage/loss to building electrical systems | No immediate release. | This event is the loss of the PBVS due to electrical system failure as the result of an NPH event. The loss of PBVS by itself does not result in the release of any significant amount of radiological material so the consequences to the Onsite-2 receptor of this event by itself are not expected to challenge the TOC. Therefore, the consequences of this event to the Onsite-2 receptor are not High and this event is not considered as a representative DBA. | N/A |

**Table 3.7-20. Hazard Analysis Events with High Consequences to the Onsite-2 Receptor (cont.)**

| Event Number | Event Description | Cause Description | Disposition | SWPF Representative DBA |
|---|---|---|---|---|
| P&VG-284 | Damage/loss to building electrical systems | No immediate release. | This event is the loss of the ability to control the process due to electrical system failure causing failure of pumps and valves as the result of an NPH event. The loss of control of the process by itself does not result in the release of any significant amount of radiological material so the consequences to the Onsite-2 receptor of this event by itself are not expected to challenge the TOC. Therefore, the consequences of this event to the Onsite-2 receptor are not High and this event is not considered as a representative DBA. | N/A |
| P&VG-285 | Damage/loss to BPCS | No immediate release. | This event is the loss of the ability to control the process due to BPCS failure causing failure of control of pumps and valves as the result of an NPH event. The loss of control of the process by itself does not result in the release of any significant amount of radiological material so the consequences to the Onsite-2 receptor of this event by itself are not expected to challenge the TOC. Therefore, the consequences of this event to the Onsite-2 receptor are not High and this event is not considered as a representative DBA. | N/A |

**Table 3.7-20. Hazard Analysis Events with High Consequences to the Onsite-2 Receptor (cont.)**

| Event Number | Event Description | Cause Description | Disposition | SWPF Representative DBA |
|---|---|---|---|---|
| P&VG-286 | Damage/loss to BPCS | No immediate release. | This event is the loss of the ability to monitor radiological releases due to radiological monitoring systems failure as the result of an NPH event. The loss of radiological monitoring by itself does not result in the release of any significant amount of radiological material so the consequences to the Onsite-2 receptor of this event by itself are not expected to challenge the TOC. Therefore, the consequences of this event to the Onsite-2 receptor are not High and this event is not considered as a representative DBA. | N/A |
| P&VG-287 | Damage/loss to BPCS | No immediate release. | This event is the loss of the ability to control the process due to BPCS failure causing failure of ability to monitor process indicators as the result of an NPH event. The loss of control of the process by itself does not result in the release of any significant amount of radiological material so the consequences to the Onsite-2 receptor of this event by itself are not expected to challenge the TOC. Therefore, the consequences of this event to the Onsite-2 receptor are not High and this event is not considered as a representative DBA. | N/A |
| AFFF-89 | Hydrogen gas from radiolysis with ignition results in explosion - generic event | Independent of ignition source, hydrogen and carry over solvent mixture results in vessel explosion | Bounding AFF Process Vessel Explosion event has the potential to exceed the TOC to Onsite-2 receptor per analysis documented in S-CLC-J-00054, *Accident Analysis of Explosion Events*. Grouped with AFF Process Vessel Explosion DBA. | AFF Process Vessel Explosion |

**Table 3.7-20. Hazard Analysis Events with High Consequences to the Onsite-2 Receptor (cont.)**

| Event Number | Event Description | Cause Description | Disposition | SWPF Representative DBA |
|---|---|---|---|---|
| AFFF-95 | Hydrogen gas from radiolysis with ignition results in explosion – multi-strike mode; vessel explosion | Independent of ignition source, hydrogen and carry over solvent mixture results in vessel explosion; heat up solvent to flammability levels | Bounding AFF Process Vessel Explosion event has the potential to exceed the TOC to Onsite-2 receptor per analysis documented in S-CLC-J-00054, *Accident Analysis of Explosion Events*. Grouped with AFF Process Vessel Explosion DBA. | AFF Process Vessel Explosion |
| AFFF-100 | Electric spark/shock/arc flash ignites combustible/flammable process stream – multi-strike mode | Electric spark initiates explosion with hydrogen/solvent mixture in AFF vessels with release of radiological material; heat up solvent to flammability levels | Bounding AFF Process Vessel Explosion event has the potential to exceed the TOC to Onsite-2 receptor per analysis documented in S-CLC-J-00054, *Accident Analysis of Explosion Events*. Grouped with AFF Process Vessel Explosion DBA. | AFF Process Vessel Explosion |
| AFFF-149 | Process heater overheats process stream – multi-strike mode; vessel explosion; equipment failure results in overheating | Control operator error results in overheating; heat up solvent to flammability levels; heat up solvent to flammability levels | Bounding AFF Process Vessel Explosion event has the potential to exceed the TOC to Onsite-2 receptor per analysis documented in S-CLC-J-00054, *Accident Analysis of Explosion Events*. Grouped with AFF Process Vessel Explosion DBA. | AFF Process Vessel Explosion |
| AFFF-152 | Process pump overheats process stream – multi-strike mode; vessel explosion; equipment failure results in overheating | Equipment failure results in overheating; heat up solvent to flammability levels; heat up solvent to flammability levels | Bounding AFF Process Vessel Explosion event has the potential to exceed the TOC to Onsite-2 receptor per analysis documented in S-CLC-J-00054, *Accident Analysis of Explosion Events*. Grouped with AFF Process Vessel Explosion DBA. | AFF Process Vessel Explosion |

**Table 3.7-20. Hazard Analysis Events with High Consequences to the Onsite-2 Receptor (cont.)**

| Event Number | Event Description | Cause Description | Disposition | SWPF Representative DBA |
|---|---|---|---|---|
| AFFF-169 | Hydrogen gas from radiolysis with ignition results in explosion - multi-strike mode; vessel explosion; normal operation | Solids accumulate in process vessels as a result of inadequate mixing, leading to the retention of hydrogen in the unmixed waste volume which releases rapidly and the concentration of flammable gas in the vessel headspace exceeds the lower flammability limit (LFL) ignites | Trapped gas vessel explosion event. Because the consequences for trapped gas vessel explosion events are independent of the fact of trapped gas, this event's consequences are identical to Bounding AFF Process Vessel Explosion event. Bounding AFF Process Vessel Explosion event has the potential to exceed the TOC to Onsite-2 receptor per analysis documented in S-CLC-J-00054, *Accident Analysis of Explosion Events*. Grouped with AFF Process Vessel Explosion DBA. | AFF Process Vessel Explosion |
| AFFF-170 | Hydrogen gas from radiolysis with ignition results in explosion - multi-strike mode; vessel explosion; TAP not operating | Solids accumulate in process vessels as a result of inadequate mixing, leading to the retention of hydrogen in the unmixed waste volume which releases rapidly and the concentration of flammable gas in the vessel headspace exceeds the lower flammability limit (LFL) ignites | Trapped gas vessel explosion event. Because the consequences for trapped gas vessel explosion events are independent of the fact of trapped gas, this event's consequences are identical to Bounding AFF Process Vessel Explosion event. Bounding AFF Process Vessel Explosion event has the potential to exceed the TOC to Onsite-2 receptor per analysis documented in S-CLC-J-00054, *Accident Analysis of Explosion Events*. Grouped with AFF Process Vessel Explosion DBA. | AFF Process Vessel Explosion |
| AFFF-200 | Damage/loss to AFF exhaust system | No immediate impact because LFL not present in tanks; LFL develops over time; POST SEISMIC SUBSEQUENT EXPLOSION | This event is the occurrence of explosion in process vessel after loss of AFF exhaust system due to NPH event. This scenario is addressed in the bounding seismic event for SWPF. Bounding Seismic event has the potential to exceed the TOC to Onsite-2 receptor per analysis documented in S-CLC-J-00084, *Radiological Consequences of a Seismic Event at SWPFs*. Grouped with Seismic Event DBA. | Seismic Event |

**Table 3.7-20. Hazard Analysis Events with High Consequences to the Onsite-2 Receptor (cont.)**

| Event Number | Event Description | Cause Description | Disposition | SWPF Representative DBA |
|---|---|---|---|---|
| AFFF-206 | Damage/loss to building electrical systems | No immediate impact because LFL not present in tanks; LFL develops over time; POST SEISMIC SUBSEQUENT EXPLOSION | This event is the occurrence of explosion in process vessel after loss of vessel mixing due to NPH event. Trapped gas vessel explosion event. Because the consequences for trapped gas vessel explosion events are independent of the fact of trapped gas, this event's consequences are identical non-trapped gas process vessel explosion event. This scenario is addressed in the bounding seismic event for SWPF. Bounding Seismic event has the potential to exceed the TOC to Onsite-2 receptor per analysis documented in S-CLC-J-00084, *Radiological Consequences of a Seismic Event at SWPFs*. Grouped with Seismic Event DBA. | Seismic Event |
| AFFF-207 | Damage/loss to building electrical systems | No immediate impact because LFL not present in tanks; LFL develops over time; POST SEISMIC SUBSEQUENT EXPLOSION | This event is the occurrence of explosion in process vessel after loss of BPCS due to failure of the electrical systems from a NPH event. This scenario is addressed in the bounding seismic event for SWPF. Bounding Seismic event has the potential to exceed the TOC to Onsite-2 receptor per analysis documented in S-CLC-J-00084, *Radiological Consequences of a Seismic Event at SWPFs*. Grouped with Seismic Event DBA. | Seismic Event |

**Table 3.7-20. Hazard Analysis Events with High Consequences to the Onsite-2 Receptor (cont.)**

| Event Number | Event Description | Cause Description | Disposition | SWPF Representative DBA |
|---|---|---|---|---|
| AFFF-208 | Damage/loss to BPCS | No immediate impact because LFL not present in tanks; LFL develops over time; POST SEISMIC SUBSEQUENT EXPLOSION | This event is the occurrence of explosion in process vessel after loss of BPCS due to NPH event. This scenario is addressed in the bounding seismic event for SWPF. Bounding Seismic event has the potential to exceed the TOC to Onsite-2 receptor per analysis documented in S-CLC-J-00084, *Radiological Consequences of a Seismic Event at SWPFs*. Grouped with Seismic Event DBA. | Seismic Event |

**Table 3.7-21. Hazard Analysis Event Grouping into Design Basis Accidents[B]**

| Event Type | Node | SWPF DBA | HA Event Numbers |
|---|---|---|---|
| E-1 Fire | 1.1 ASP | Process Vessel Cell Fire | ASP-103, ASP-105, ASP-113, ASP-114 |
| E-2 Explosion | 1.1 ASP | ASP Process Vessel Explosion | ASP-79, ASP-84, ASP-96, ASP-97, ASP-108, ASP-109, ASP-110, ASP-111 |
| | 2.2 AFF | AFF Process Vessel Explosion | AFFF-89, AFFF-95, AFFF-100, AFFF-149, AFFF-152, AFFF-169, AFFF-170 |
| E-3 Loss of Confinement | 1.1 ASP | ASP APA Air Jet Aerosolization | ASP-32, ASP-33, ASP-34, ASP-35, ASP-36, ASP-37, ASP-38, ASP-39, ASP-40, ASP-41, ASP-42 |
| E-7 NPH | 1.1 ASP<br>1.4 Labyrinth<br>2.2 AFF | Seismic Event | ASP-116, ASP-130,ASP-132, ASP-133, ASP-134, ASP-135, ASP-136, ASP-138, ASP-139, ASP-140, ASP-141, P&VG-270, AFFF-200, AFFF-206, AFFF-207, AFFF-208 |

[B] Note the following events listed in Table 3.7-21 where qualitatively identified with "High" consequence to the collocated worker; however, further quantitative calculations determined that these events did not result in "High" consequence to the collocated worker: ASP-112, P&VG-282, P&VG-283, P&VG-284, P&VG-285, P&VG-286, and P&VG-287.

**Table 3.7-22. Design Basis Accident Control Summary**

| AA # | Description | AA Derived Controls Name | AA Preventative /Mitigative | Control Number |
|---|---|---|---|---|
| 3.4.2.1 | Cell Fire | Access Controls | IC | IC-1 |
| | | CPA Walls/Ceilings Surrounding Process Vessel Cells | IC | IC-4 |
| | | Grounding per NFPA | P | EC-7 |
| | | PBVS | M | EC-8 |
| | | Process vessels and equipment within the Process Vessel Cells | P | EC-17 |
| | | Waste Piping | P | EC-17 |
| | | Ignition Source Control Program | P | AC-7 |
| 3.4.2.2 | ASP Explosion | CFFs | IC | IC-5 |
| | | PVVS Low-Vacuum Alarm | IC | IC-12 |
| | | Access Controls | IC | IC-1 |
| | | Tank Agitation Program | IC | IC-14 |
| | | ADS Low Pressure Alarms | IC | IC-13 |
| | | ADS | P | EC-1<br>EC-2 |
| | | Grounding per NFPA | P | EC-7 |
| | | FFT-A and SSRT Tank Temperature Interlocks | P | EC-11.c |
| | | Ignition Source Control Program | P | AC-7 |
| | | Flammability Control Program for the ASDT and SAST | P | AC-8 |
| | | High Temperature in FFT-A or SSRT | P | AC-11 |
| 3.4.2.3 | AFF Explosion | CFFs | IC | IC-5 |
| | | High Turbidity Interlock | IC | IC-11 |
| | | Tank Agitation Program | IC | IC-14 |
| | | BDT Gamma Interlock | IC | IC-10 |
| | | AFF Ventilation Exhaust System | M | EC-8 |
| | | FFT-B Recirculation Loop Temperature Interlocks to Filter Recirculation Pumps | P | EC-11.c |
| | | Solvent Removal Program | P | AC-4 |

**Table 3.7-22. Design Basis Accident Control Summary (cont.)**

| AA # | Description | AA Derived Controls Name | AA Preventative /Mitigative | Control Number |
|---|---|---|---|---|
| | | Draining Slurried Solids from FFT-B/MSTT to AFDT Program | P | AC-9 |
| 3.4.2.4 | ASP Aerosolization | CFFs | IC | IC-5 |
| | | Access Controls | IC | IC-1 |
| | | APA Air Supply Configuration including Piping Minimum Diameter and Nozzle | M | EC-20 |
| | | PBVS | M | EC-8<br>EC-16 |
| | | PVVS | M | EC-8 |
| | | APA In-vessel Air Supply Piping and the APAs | P | EC-21 |
| | | Restrictive Flow Orifice | M | EC-10 |
| | | Isolating the APAs from the Plant Air Supply | M | AC-5.b |
| 3.4.2.5 | Seismic | High Turbidity Interlock | IC | IC-11 |
| | | ADS Low Pressure Alarms | IC | IC-13 |
| | | PVVS Low-Vacuum Alarm | IC | IC-12 |
| | | Access Controls | IC | IC-1 |
| | | BDT Gamma Interlock | IC | IC-10 |
| | | CPA Structure | P | IC-4 |
| | | CR Design | P | EC-4 |
| | | Hot Cell Design | P | EC-9 |
| | | ADS and Backup Air Receiver | P | EC-1<br>EC-2 |
| | | Spill Containment | M | IC-4<br>EC-3 |
| | | Grounding per NFPA | P | EC-7 |
| | | FFT-A and SSRT Tank Temperature Interlocks | P | EC-11.c |
| | | FFT-B Recirculation Loop Temperature Interlocks | P | EC-11.c |
| | | Drain lines to ASDT Cell Tanks | M | EC-13 |
| | | Process vessels and equipment within the Process Vessel Cells | P | EC-17 |

**Table 3.7-22. Design Basis Accident Control Summary (cont.)**

| AA # | Description | AA Derived Controls Name | AA Preventative /Mitigative | Control Number |
|---|---|---|---|---|
| | | Process Vessel Overflow Lines | P | EC-18 |
| | | Waste Piping | P | EC-12<br>EC-14<br>EC-17 |
| | | Access Controls | P | AC-1 |
| | | 13.8-kV Manual Disconnect Switches | P | AC-2 |
| | | Solvent Removal Program | P | AC-4 |
| | | Seismic Event Response | P | AC-10 |
| | | APA Air Supply Lines | P | EC-20 |
| | | PVVS piping in Process Vessel Cells | P | EC-22 |
| | | APA In-vessel Air Supply Piping and the APAs | P | EC-21 |

This page intentionally left blank.

## 3.8 References

[1] 10 CFR 830, *Nuclear Safety Management*.

[2] V-PHR-J-00007, *SWPF Hazard Analysis*. Parsons, Aiken, South Carolina (as modified by HACN-0004).

[3] DOE-STD-3009-94, Change Notice No. 3, *Preparation Guide for U.S. Department of Energy Nonreactor Nuclear Facility Documented Safety Analyses*. U.S. Department of Energy, Washington, D.C.

[4] DOE-STD-1027-92, Change Notice No. 1, *Hazard Categorization and Accident Analysis Techniques for Compliance with DOE Order 5480.23, Nuclear Safety Analysis Reports*. U.S. Department of Energy, Washington, D.C.

[5] DOE-HDBK-3010-94, Change Notice 1. *Airborne Release Fractions/Rates and Respirable Fractions for Non-Reactor Nuclear Facilities*, Volume 1: Analysis of Experimental Data. U.S. Department of Energy, Washington D.C.

[6] DOE O 420.1B, *Facility Safety*. U.S. Department of Energy, Washington, D.C.

[7] DOE-STD-1020-2002, *Natural Phenomena Hazards Design and Evaluation Criteria for Department of Energy Facilities*. U.S. Department of Energy, Washington, D.C.

[8] DOE-STD-1021-93, Change Notice No. 1, *Natural Phenomena Hazards Performance Categorization Guidelines for Structures, Systems, and Components*. U.S. Department of Energy, Washington, D.C.

[9] *Salt Waste Processing Facility Project Procedures Manual*. Parsons, Aiken, South Carolina.

[10] DOE-STD-3009-1994, Change Notice No. 3, *Preparation Guide for U.S. Department of Energy Nonreactor Nuclear Facility documented Safety Analysis*. U.S. Department of Energy, Washington, D.C.

[11] Site Manual SCD-11, *Consolidated Hazard Analysis Process Program and Methods Manual*, Revision 14. Savannah River Site, Aiken, South Carolina.

[12] DOE-STD-3009-2014, *Preparation of Nonreactor Nuclear Facility Documented Safety Analysis*. U.S. Department of Energy, Washington, D.C.

[13] ANSI/ASSE Z590.3–2011, *Prevention through Design: Guidelines for Addressing Occupational Hazards and Risks in Design and Redesign Processes*. American National Standards Institute, Inc./American Society of Safety Engineers. La Grange Park, Illinois.

[14] *Guidelines for Hazard Evaluation Procedures* – Third Edition. Center for Chemical Process Safety. New York, New York. April 2008.

[15] P-DB-J-00003, SWPF Process Basis of Design. Parsons, Aiken South Carolina.

[16] P-DB-J-00004, *SWPF Balance of Plant Basis of Design*. Parsons, Aiken, South Carolina.

[17] P-ESR-J-00011, *SWPF Operations Requirements Document*. Parsons, Aiken, South Carolina.

[18] P-SAR-J-00001, *SWPF Safety Analysis Mass Balance Run*. Parsons, Aiken, South Carolina.

[19] P-SYD-J-00001, *SWPF Sequence of Operations*. Parsons, Aiken, South Carolina.

[20] M-M5-J-0001, *SWPF Simplified Process Flow Schematic (U)*. Parsons, Aiken, South Carolina.

[21] 10 CFR 851, *Worker Safety and Health Program.*

[22] S-CLC-J-00029, *Radionuclide Concentrations in Process Vessels*, Revision 1. Parsons, Aiken, South Carolina.

[23] N-NCS-J-00005, *SWPF Nuclear Criticality Safety Evaluation: Fissile Concentration Due to MST*, Revision 1. Parsons, Aiken, South Carolina.

[24] N-NCS-J-00006, *SWPF Nuclear Criticality Safety Evaluation: Accumulation of NAS in SWPF Equipment*, Revision 0. Parsons, Aiken, South Carolina.

[25] N-NCS-J-00008, *SWPF Nuclear Criticality Safety Evaluation: Inadvertent Transfers*. Revision 1. Parsons, Aiken, South Carolina.

[26] DOE/EIS-0082-S2, *Savannah River Site Salt Processing Alternatives Final Supplemental Environmental Impact Statement*. U.S. Department of Energy, Savannah River Operations Office, Aiken, South Carolina. June 2001.

[27] *National Environmental Policy Act (NEPA) of 1969*, Pub. L. 91-190, 42 USC§4321 et seq., as amended.

[28] *Record of Decision: Savannah River Site Salt Processing Alternatives*. U.S. Department of Energy, Washington, D.C. Published in the Federal Register: October 17, 2001 (Volume 66, Number 201).

[29] S-EIP-J-00001, *SWPF Environmental Plan*. Parsons, Aiken, South Carolina.

[30] V-ESR-J-00019, *SWPF Permitting and Monitoring Requirement Interface Control Document (ICD-19).* Parsons, Aiken, South Carolina.

[31] Q-CLC-J-00052, *SWPF Radiological Air Emissions, Dispersion, and Dose Assessment for Normal Operations of Ventilated Tanks and Vessels*. Parsons, Aiken, South Carolina.

[32] 40 CFR 61, *National Emission Standards for Hazardous Air Pollutants.*

[33] Q-CLC-J-00006, *Level II Analysis of SWPF Air Toxic Emissions and Evaluation of Chemical Emissions Exposure Levels Adjacent to SWPF*, Revision 0. Parsons, Aiken, South Carolina.

[34] P-ESR-J-00001, *SWPF Mass Balance Model Summary Description*. Parsons, Aiken, South Carolina.

[35] M-CLC-00143, *Mass Balance Model Calculations as a Result of Nitric Acid Replacing Oxalic Acid,* Revision 1, Parsons, Aiken, South Carolina.

[36] WSRC-TR-2004-00386, *Characterization of Supernate Samples from High Level Waste Tanks 13H, 30H, 37H, 39H, 45F, 46F, and 49H*, Revision 1. Authors: Stallings, M.E., M.J. Barnes, T.B. Peters, F.F. Fondeur, D.T. Hobbs, and S.D. Fink. Westinghouse Savannah River Company, Aiken, South Carolina.

[37] P-SPC-J-00001, *SWPF Feed Strategy and Product and Secondary Waste Specification*. Parsons, Aiken, South Carolina.

[38] PE-03-166, "*Monosodium Titanate (MST) Performance in Removing Actinides/Strontium from Feed at the Salt Waste Processing Facility (SWPF)*". Letter from Painter, G.W. (DOE-SR) to C.H. Terhune III (Parsons), dated February 6, 2003, and attachment, "*Suggested Design Basis for SWPF Feed – Conceptual Design Phase*", Internal WSRC Memorandum from Elder, H.H. to R.E. Edwards, dated February 3, 2003.

[39] S-CLC-J-00041, *SWPF Fire Radiological Consequence Analysis (U)*, Revision 3, Parsons, Aiken, South Carolina.

[40] S-CLC-J-00033, *Time to Reach the Composite Lower Flammability Limit (CLFL) for SWPF Process Vessels*. Revision 2. Parsons, Aiken, South Carolina.

[41] Bureau of Mines Bulletin 680, *Investigation of Fire and Explosion Accidents in the Chemical, Mining, and Fuel-Related Industries – A Manual.* Author: Kuchta, J.M. Bureau of Mines. 1985.

[42] Material Safety Data Sheet (MSDS) No. 92842637, *Isopar L Fluid*. ExxonMobil Chemical Company, Houston, Texas. August 11, 2004.

[43] ORNL/TM-2007/093, *Radiolysis of CSSX Solvents for Parsons Infrastructure & Technology Group in FY 2007 in Support of the Salt Waste Processing Facility at the Savannah River Site.* Authors: Bonnesen, P. V., etal. Oak Ridge National Laboratory, Oak Ridge Tennessee. June 2007.

[44] S-RPT-J-00008, *SWPF Impact of Revised Atmospheric Dispersion Parameters on Accident Consequences*, Revision 0. Parsons, Aiken, South Carolina.

[45] DOE-STD-1189-2008, *Integration of Safety into the Design Process*. U.S. Department of Energy, Washington, D.C.

[46] SRNL-STI-2012-00648, *Revised Meteorological Data Files for Safety Related Atmospheric Dispersion Modeling (U)*, Revision 0, Savannah River Site, Aiken, South Carolina.

[47] ICRP Publication 68, *Dose Coefficients for Intakes of Radionuclides by Workers*, Annals of the ICRP, Volume 24, Number 4. ICRP. Elsevier Books, Oxford, England. July 1995.

[48] ICRP Publication 72, *Age-dependent Doses to the Members of the Public from Intake of Radionuclides: Part 5*, Annals of the ICRP, Volume 26, Number 1. Pergamon Press, New York, New York. 1996.

[49] SRNL-STI-2012-00016, *Roughness Lengths for the Savannah River Site*, Revision 1. A. H. Weber, R. J. Kurzeja, and C. H. Hunter, Savannah River Site, Aiken, South Carolina.

[50] S-CLC-G-00372, *Unit Total Dose Factors for Onsite and Offsite Receptors At SRS (U)*, Revision 0. Savannah River Site, Aiken, South Carolina.

[51] S-CLC-J-00058, *SWPF Dose Conversion Factors*, Revision 1. Parsons, Aiken, South Carolina.

[52] INL/EXT-09-15302, *CSSX Radiolytic $H_2$ Generation ("Thermolysis") Final Report*, Revision 0. Author: Bruce Mincher, Idaho National Laboratory, Aqueous Separations and Radiochemistry, Idaho Falls, Idaho. Issued January 2009.

[53] *Test Plan for the Determination of Isopar L Vapor over CSSX Solvent and the Test Results*. Authors: Hall, Jack R. and A.D. Peery. MCL, Inc., Project Number ORN001950. Materials and Chemistry Laboratory, Inc., Oak Ridge, Tennessee. November 5, 2007.

[54] NFPA 30, *Flammable and Combustible Liquids Code*. 2003 Edition. National Fire Protection Association. 2003.

[55] 00-700-23945, *Solvent Volumes Assumed to be Present in Process Vessels*, Revision 1. Interoffice Correspondence from J. Mullaney to B. Brasel. Parsons, Aiken, South Carolina.

[56] DOE/RW-0006, *Integrated Data Base Report – 1996: U. S. Spent Nuclear Fuel and Radioactive Waste Inventories, Projections, and Characteristics*, Revision 13. U.S. Department of Energy, Office of Environmental Management, Washington, DC.

[57] S-RPT-J-00011, *SWPF Impact of SRS Liquid Waste HGR PISAs on the SWPF Safety Basis*. Parsons, Aiken, South Carolina.

[58] S-CLC-J-00032, *Heat-up of the SEHT under Loss of Cooling Conditions*, Revision 0. Parsons, Aiken, South Carolina.

[59] HNF-4240, *Organic Solvent Topical Report*. Author: Cowley, W. Hanford Site, Richland, Washington, March 30, 1999.

[60] 00-700-26798, *Contribution of the Cs-137 in Solvent to the ASP Cell Fire Inhalation Doses*, Revision 0. Interoffice correspondence to B. Brasel from Mike Beck. Parsons, Aiken, South Carolina.

[61] S-CLC-J-00054, *Accident Analysis of Explosion Events*, Revision 2. Parsons, Aiken, South Carolina.

[62] S-CLC-J-00027, *Pulse Jet Mixer Air Jet Aerosolization Event Accident Analysis*, Revision 2. Parsons, Aiken, South Carolina.

[63] 00-700-26814, *APA Overblow Supplemental Analysis*. Interoffice Correspondence from B. Brasel to Dr. Thomas D. Burns, Jr. P.E. Parsons Aiken, South Carolina. September 12, 2018.

[64] S-CLC-J-00084, *Radiological Consequences of a Seismic Event at SWPF*. Revision 2. Parsons, Aiken, South Carolina.

[65] S-CLC-J-00139, *Time to Reach CLFL in the APA Vapor Spaces in the SWPF Process Vessels*, Revision 0. Parsons, Aiken, South Carolina.

[66] S-CLC-J-00030, *Accident Analysis of Pressurized Leak Aerosolization Events*. Revision 2. Parsons, Aiken, South Carolina.

[67] P-RPT-J-00002, *Salt Waste Processing Facility Project Test Report: Air Pulse Agitator Pilot-Scale Test*. Parsons, Aiken, South Carolina.

This page intentionally left blank.

# SWPF DOCUMENTED SAFETY ANALYSIS

# CHAPTER 4.0
# SAFETY STRUCTURES, SYSTEMS, AND COMPONENTS

This page intentionally left blank.

## TABLE OF CONTENTS

4.0 SAFETY STRUCTURES, SYSTEMS, AND COMPONENTS ..... 4.1-1

4.1 Introduction ..... 4.1-1
4.2 Requirements ..... 4.2-1
4.3 Safety Class SSCs ..... 4.3-1
4.4 SS SSCs ..... 4.4-1
4.4.1 Process Vessels, Tanks and Cross-Flow Filters: Structural (Confinement) ..... 4.4-2
4.4.2 Process Vessels: Overflow Lines ..... 4.4-4
4.4.3 Process Vessel Grounding – Central Processing Area ..... 4.4-7
4.4.4 Waste Piping ..... 4.4-9
4.4.5 Process Building: CPA ..... 4.4-11
4.4.6 Process Building Control Room, Cells, Enclosures, P&VGs and Pipe Chases ..... 4.4-13
4.4.7 Spill Containment ..... 4.4-17
4.4.8 Drain Lines to ASDT Cell Tanks (ASDT [TK-601], Solvent Drain Tank [TK-208], and Lab Drain Tank [TK-235]) ..... 4.4-22
4.4.9 Analytical Laboratory Hot Cells and AFF Sample Gloveboxes ... 4.4-24
4.4.10 APAs and Supporting Plant Air Sub-System ..... 4.4-27
4.4.11 PVVS ..... 4.4-29
4.4.12 ADS and Supporting Plant Air Sub-System ..... 4.4-32
4.4.13 PBVS ..... 4.4-40
4.4.14 Analytical Laboratory Ventilation System ..... 4.4-44
4.4.15 WTE Vent Line ..... 4.4-48
4.4.16 AFF Ventilation System ..... 4.4-49
4.4.17 Safety Instrumented System Logic Solver ..... 4.4-52
4.4.18 Tank Temperature Interlocks to Filter Recirculation Pumps ..... 4.4-57
4.4.19 Filter Feed Tank-B Recirculation Loop Temperature Interlocks 4.4-59
4.4.20 Analytical Laboratory Ventilation System: Hot Cell/Glovebox Vacuum Interlock ..... 4.4-62
4.4.21 High-turbidity Interlock ..... 4.4-64
4.4.22 Barium-137 Decay Tank Gamma Detector and Interlock ..... 4.4-67
4.4.23 ADS Low Pressure Alarms ..... 4.4-69
4.4.24 PVVS Low-Vacuum Alarm ..... 4.4-72
4.4.25 PBVS Instrumentation and Alarms ..... 4.4-74
4.4.26 PVVS HEPA Filter Instrumentation and Alarms ..... 4.4-76
4.4.27 Analytical Laboratory Ventilation System HEPA Filter Instrumentation and Alarms ..... 4.4-78
4.4.28 AFF Ventilation System Instrumentation and Alarms ..... 4.4-79
4.4.29 Waste Container Vents ..... 4.4-81
4.4.30 13.8-Kilovolt Manual Disconnect Switches ..... 4.4-82
4.5 Specific Administrative Control ..... 4.4-84
4.5.1 WAC Program (TSR Administrative Control 5.8.3.1) ..... 4.5-1

TABLE OF CONTENTS (cont.)

4.5.2 Process Chemistry Control Program (TSR Administrative Control 5.8.3.2) ..... 4.5-3
4.5.3 Ignition Source Control Program (TSR Administrative Control 5.8.3.3) ..... 4.5-4
4.5.4 Solvent Removal Program (TSR Administrative Control 5.8.3.4) . 4.5-5
4.5.5 Tank Agitation Program – AST-A (TK-101), FFT-A (TK-102), SSRT (TK-104) (Limiting Conditions for Operation [LCO] 3.1.5) 4.5-9
4.5.6 Tank Agitation Program – FFT-B (TK-222), MSTT (TK-224) (LCO 3.7.1) ..... 4.5-12
4.5.7 Draining Slurried Solids from FFT-B (TK-222)/MSTT (TK-224) to Alpha Finishing Drain Tank (AFDT) (TK-228) (TSR Administrative Control 5.8.3.7) ..... 4.5-13
4.5.8 Inter-Facility Transfer Control Program (TSR Administrative Control 5.8.3.6) ..... 4.5-15
4.5.9 Seismic Event Response (TSR Administrative Control 5.8.3.8) ... 4.5-18
4.5.10 High Temperature in the FFT-A (TK-102) or SSRT (TK-104) (TSR Administrative Control 5.8.3.9) ..... 4.5-20
4.5.11 Process Piping Line Drain/Flush (TSR Administrative Control 5.8.3.10) ..... 4.5-22
4.5.12 Access Control (TSR Administrative Control 5.8.3.11) ..... 4.5-24
4.5.13 Isolating APAs from the Plant Air System (TSR Administrative Control 5.8.3.12) ..... 4.5-26
4.6 Figures ..... 4.6-1
4.7 Tables ..... 4.7-1
4.8 References ..... 4.8-1

List of Figures

Figure 4.6-1. Safety Significant PC-3 Primary Confinement Boundary for Liquid Waste4.6-1
Figure 4.6-2. Simplified Diagram of Air Dilution System and Process Vessel Ventilation System ..... 4.6-2
Figure 4.6-3. Simplified Diagram of Analytical Laboratory Ventilation System Credited Components and Relationship to Process Building Ventilation System..... 4.6-3
Figure 4.6-4. TMR Architecture of the Tricon PLC System ..... 4.6-4

List of Tables

Table 4.7-1. Safety Significant Structures, Systems, and Components..... 4.7-1
Table 4.7-2. Specific Administrative Controls ..... 4.7-20

## LIST OF ACRONYMS AND ABBREVIATIONS

| | |
|---|---|
| % | Percent |
| AA | Accident Analysis |
| AC | Alternating Current |
| ADS | Air Dilution System |
| AFDT | Alpha Finishing Drain Tank (TK-228) |
| AFF | Alpha Finishing Facility |
| ANSI | American National Standards Institute |
| APA | Air Pulse Agitator |
| ASDT | Alpha Sorption Drain Tank (TK-601) |
| ASME | American Society of Mechanical Engineers |
| ASP | Alpha Strike Process |
| AST-A | Alpha Sorption Tank-A (TK-101) |
| AST-B | Alpha Sorption Tank (TK-221) |
| AVD | Attribute Verification Database |
| Ba | Barium |
| BDT | Ba-137 Decay Tank (TK-206) |
| BG | Building General |
| BPCS | Basic Process Control System |
| CCA | Cold Chemicals Area |
| CFF | Cross-flow Filter |
| CFR | Code of Federal Regulations |
| Ci/gal | Curies per Gallon |
| CLFL | Composite Lower Flammability Limit |
| CPA | Central Processing Area |
| CR | Control Room |
| Cs | Cesium |
| CDCSS | Cs-depleted Clarified Salt Solution |
| CSDT-A | Cleaning Solution Dump Tank-A (TK-103) |
| CSS | Clarified Salt Solution |
| CSSX | Caustic-side Solvent Extraction |
| CSTF | Concentration, Storage, and Transfer Facility |
| DBA | Design Basis Accident |
| DID | Defense-in-depth |
| DOE | U.S. Department of Energy |
| dP | Differential pressure |
| DSA | Documented Safety Analysis |
| DSS | Decontaminated Salt Solution |
| DSSHT | Decontaminated Salt Solution Hold Tank (TK-207) |
| DWPF | Defense Waste Processing Facility |
| EC | Engineering Control |
| EG | Evaluation Guideline |
| FFT-A | Filter Feed Tank-A (TK-102) |

## LIST OF ACRONYMS AND ABBREVIATIONS (cont.)

| | |
|---|---|
| FFT-B | Filter Feed Tank-B (TK-222) |
| FICV | Flow-indicating Control Valve |
| FSA | Facility Support Areas |
| ft | Feet/Foot |
| GS | General Service |
| HA | Hazards Analysis |
| HART | Highway Addressable Remote Transducer |
| HEPA | High-efficiency Particulate Air |
| HTF | H-Area Tank Farm |
| HVAC | Heating, Ventilating, and Air Conditioning |
| IC | Initial Condition |
| ICP | Instrument Control Panel |
| II/I | Two-over-One |
| IPI | Installed Process Instrumentation |
| ISA | International Society of Automation and Control |
| IST | Intermediate Storage Tank (TK-220) |
| kV | Kilovolt |
| LCO | Limiting Conditions for Operation |
| LOP | Loss of Power |
| LPPP | Low Point Pump Pit |
| M | Molar |
| M&TE | Measuring and Test Equipment |
| MCC | Motor Control Center |
| mg/L | Milligrams per Liter |
| MOI | Maximally Exposed Offsite Individual |
| MST | Monosodium Titanate |
| MSTT | MST/Sludge Transfer Tank (TK-224) |
| NFPA | National Fire Protection Association |
| NPH | Natural Phenomena Hazard |
| P&VG | Pump and Valve Gallery |
| PA | Process Area |
| PBVS | Process Building Ventilation System |
| PC | Performance Category |
| PISA | Potential Inadequacy in the Safety Analysis |
| PLC | Programmable Logic Controller |
| PMVS | Pulse Mixer Ventilation System |
| ppm | Parts per Million |
| Pu | Plutonium |
| PVVS | Process Vessel Ventilation System |
| rem | Roentgen Equivalent Man |
| SAC | Specific Administrative Control |
| SAST | Spent Acid Storage Tank (TK-127) |

## LIST OF ACRONYMS AND ABBREVIATIONS (cont.)

| | |
|---|---|
| SC | Safety Class |
| SEHT | Strip Effluent Hold Tank (TK-205) |
| SHT | Solvent Hold Tank (TK-202) |
| SIF | Safety Instrumented Function |
| SIL | Safety Integrity Level |
| SIS | Safety Instrumented Systems |
| Sr | Strontium |
| SR | Surveillance Requirement |
| SRS | Savannah River Site |
| SRSOC | Savannah River Site Operations Center |
| SS | Safety Significant |
| SSC | Structure, System, and Component |
| SSFT | Salt Solution Feed Tank (TK-109) |
| SSRT | Sludge Solids Receipt Tank (TK-104) |
| SWPF | Salt Waste Processing Facility |
| TMR | Triple Modular Redundant |
| TSR | Technical Safety Requirement |
| U | Uranium |
| UPS | Uninterruptible Power Supply |
| USQ | Unreviewed Safety Question |
| V | Volts |
| VDC | Volts Direct Current |
| VFD | Variable Frequency Drive |
| WAC | Waste Acceptance Criteria |
| WCP | Waste Compliance Plan |
| WTE | Waste Transfer Enclosure |
| WWHT | Wash Water Hold Tank (TK-105) |

This page intentionally left blank.

# 4.0 SAFETY STRUCTURES, SYSTEMS, AND COMPONENTS

## 4.1 Introduction

This chapter provides details on those facility structures, systems, and components (SSCs) that are designated as Safety Class (SC) and Safety Significant (SS). The SC and SS SSCs are necessary to protect the offsite public, provide defense-in-depth (DID), or contribute to worker safety. The determination of which SSCs protect the offsite public, provide DID, or contribute to worker safety is documented in Chapter 3.0.

As part of the safety analysis procedure defined in 10 Code of Federal Regulations (CFR) 830, *Nuclear Safety Management*[1], engineered safety features that prevent or mitigate the consequences of all potential accidents, including the Design Basis Accidents (DBAs), must be identified. Also required are descriptions of the safety functions, interfaces, operating conditions, and performance criteria for the engineered safety features.

The scope of this chapter includes the following:

1. Listing of the SC and SS SSCs for the Salt Waste Processing Facility (SWPF), including the required safety functions;
2. Identification of support systems safety SSCs depend upon to carry out safety functions;
3. Identification of the functional requirements necessary for the safety-related SSCs to perform their safety functions, and the general conditions caused by postulated accidents under which the safety-related SSCs must operate;
4. Identification of the performance criteria necessary to provide reasonable assurance that the functional requirements are met for the safety-related SSCs; and
5. Evaluation of each safety-related SSC to meet the functional requirements needed by the SSC to fulfill its safety function.

10 CFR 830[1] prescribes the use of a graded approach for the effort expended in safety analyses and the level of detail presented in associated documentation. The graded approach adjusts the magnitude of the preparation effort, based on the facility hazards magnitude or severity, facility complexity, and facility life-cycle stage.

This page intentionally left blank.

## 4.2 Requirements

This chapter was prepared in accordance with the format and content requirements defined in 10 CFR 830[1] and U.S. Department of Energy (DOE)-STD-3009-94, Change Notice No. 3, *Preparation Guide for U.S. Department of Energy Nonreactor Nuclear Facility Documented Safety Analyses*[2]. Safety-related SSCs were identified in accordance with the guidance provided in DOE-STD-3009-94, Change Notice No. 3[2].

The safety-related SSCs were selected, based on controls listed in Chapter 3.0. No events were identified in Chapter 3.0 accident(s) that are judged to challenge Evaluation Guidelines (EGs) for the Maximally Exposed Offsite Individual (MOI). Therefore, there are no SC SSCs to be described in this chapter.

Criteria for determining Performance Categories (PCs) for SSCs based on the Hazards Analysis (HA) are provided in DOE-STD-1021-93, Change Notice #1, *Natural Phenomena Hazards Performance Categorization Guidelines for Structures, Systems, and Components*[3]. The Natural Phenomena Hazard (NPH) design criteria for the SSCs are provided in DOE-STD-1020-2002, *Natural Phenomena Hazards Design and Evaluation Criteria for Department of Energy Facilities*[4]. For SS SSCs, PC-3 is used, as applicable. System evaluations of the SWPF SSC designs against NPH requirements are presented in Subchapter 4.4 for SS SSCs.

The SSCs listed in Table 4.7-1 perform required SS functions. No other SSCs should be inferred from the Chapter 3.0 controls as requiring SS classification.

S-RCP-J-00001, *SWPF Standards/Requirements Identification Document*[5], provides design requirements for Nuclear Safety. DOE O 420.1B, *Facility Safety*[6], is the referenced document for design requirements for the functional areas Engineering, Fire Protection, and Nuclear and Process Safety. DOE G 420.1-1, *Nonreactor Nuclear Safety Design Criteria and Explosive Safety Criteria Guide for use with DOE O 420.1, Facility Safety*[7], provides methodology for selecting industry codes and standards for Nuclear Safety aspects of nonreactor nuclear facilities design. The guide provides interpretive guidance on performance-level requirements for safety-related SSCs. P-DB-J-00004, *SWPF Balance of Plant Basis of Design*[8], discusses the applicable codes and standards for the SWPF Project. P-DB-J-00002, *SWPF Design Criteria Database*[9], documents the code of record and specific requirements used for the design of SS SSCs.

This page intentionally left blank.

## 4.3 Safety Class SSCs

SC SSCs are those SSCs whose preventive or mitigative function is necessary to keep hazardous material exposure to the public low enough not to challenge the offsite EGs. The EGs specify a radiological dose value of 25 Roentgen Equivalent Man (rem) Total Effective Dose Equivalent (DOE-STD-3009-94, Change Notice No. 3[2]) to a maximally exposed individual at the site boundary to be used in identifying SC SSCs. No events were identified in Chapter 3.0 accident(s) that are judged to challenge EGs for the MOI. Therefore, no SC SSCs are identified.

This page intentionally left blank.

## 4.4 SS SSCs

SS SSCs are those SSCs whose preventive or mitigative function is a major contributor to DID and/or worker safety. Generally, SS SSC designations based on worker safety are limited to those SSCs whose failure would result in:

- Prompt worker fatality or acute injury that is immediately life-threatening or permanently disabling, and/or
- A release that would challenge the onsite Threshold of Concern (i.e., Emergency Response Planning Guideline-3 concentration, 100 rem) for a nuclear-related event.

The SSCs listed in Table 4.7-1 are designated as SS. The table identifies the Chapter 3.0 accident categories, or rationale upon which the SS designation is based and summarizes the safety function(s), functional requirement(s), and Technical Safety Requirements (TSRs) coverage (Limiting Conditions for Operation [LCO] or Design Feature). The HA designated Engineering Control (EC) number and event categories are provided to provide a cross reference to the HA. Where applicable, the HA Initial Conditions (ICs) are also provided. Further details regarding the SSCs from Table 4.7-1 are provided below.

In addition to the SSCs classified as SS, several Administrative Controls and Specific Administrative Controls (SAC) provide SS functions. These Administrative Controls are specified and discussed further in Chapter 5.0 and SACs are specified and discussed further in Subchapter 0.

For passive SS SSCs, the Structural Integrity Program (Subchapter 5.5.5.2.12) is credited with ensuring that SSCs can perform their credited safety functions over the facility life. This program provides reasonable assurance that the evidence of structural or functional degradation during service is detected to permit corrective action before the function of the SSC is compromised. For the unoccupied cells and enclosures, periodic assessments of the functioning of these SS items will be necessary.

The SWPF design allows for remote removal/replacement of all components that could fail inside the Process Vessel Cells and enclosures. The remaining SSCs contained within the unoccupied cells and enclosures were designed to function for the life of the facility without periodic maintenance. Additional design margin was added for corrosion, flow erosion, and environmental conditions within the cell or enclosure, such as high radiation. Periodic assessments of the functioning of these SS items may be done by recording and verifying operational data during use, comparison to similar accessible equipment, or other means such as evaluating actual plant conditions' long-term effect on the design margin built into SSCs. Implementation of the Structural Integrity Program will make the determination as to how to address these issues.

In the following subchapters, the System Description subchapter provides a description of each SS SSC and the basic principles by which it performs its safety function. Where the identified SS

components are identified in the HA (Subchapter 3.3) and also credited in the Accident Analysis (AA) (Subchapter 3.4), clarification of the characteristics of the SS SSC is provided.

### 4.4.1 Process Vessels, Tanks and Cross-Flow Filters: Structural (Confinement)

#### 4.4.1.1 Safety Function

The primary function of process vessels, tanks and process components Alpha Strike Process (ASP) backpulse tanks, and ASP Cross-flow Filter (CFF) housings is to confine liquid waste. This prevents spills and limits the exposure to onsite personnel.

The Alpha Sorption Tank-A (AST-A) (TK-101), Filter Feed Tank-A (FFT-A) (TK-102), Sludge Solids Receipt Tank (SSRT) (TK-104), Salt Solution Feed Tank (SSFT) (TK-109), Wash Water Hold Tank (WWHT) (TK-105), Strip Effluent Hold Tank (SEHT) (TK-205), Alpha Sorption Filters Back Pulse Tanks (TK-121A/B/C), Lab Drain Tank (TK-235), and ASP CFF housings are credited for the seismic event and are designed to satisfy PC-3 seismic requirements.

The Solvent Drain Tank (TK-208), Alpha Sorption Drain Tank (ASDT) (TK-601), Cleaning Solution Dump Tank-A (CSDT-A) (TK-103), and Spent Acid Storage Tank (SAST) (TK-127) vessels provide an SS confinement function for non-NPH accident events. These tank vessels are classified as PC-1.

The ASP CFF sintered metal tubes are credited as a barrier for the solids in waste in the WWHT (TK-105), and the SSFT (TK-109) and downstream processes. The tubes are classified as PC-1. This function is credited as an Initial Condition (IC). Both the ASP and the Alpha Finishing Facility (AFF) CFF sintered metal tubes are credited as a barrier for the solids in filter loops passing to the shell side of the filter in the criticality analysis of Chapter 6.

The HA identified this SSC as EC-17 for event categories:

- Fire and
- NPH.

The DBA analysis in Subchapter 3.4 credits the process vessels, tanks and process components ASP backpulse tanks, and ASP CFF housings as SS controls (EC-17) for the following:

- Seismic and
- Process Cell Fire.

The DBA analysis in Subchapter 3.4 credits the CFF sintered metal tubes (barrier for the solids) as an SS control (IC-5) on inventory for the following:

- ASP Vessel Explosion,
- AFF Vessel Explosion, and

- Air Pulse Agitator (APA) Aerosolization.

#### 4.4.1.2 System Description

The process vessels are constructed of welded stainless steel and have designed working volumes. The process vessels and connecting piping in the cell are designed to PC-3 seismic requirements. The ASP backpulse tanks are part of the waste flow path, designed to PC-3 seismic requirements and constructed of stainless steel. Figure 4.6-1 provides a visual description of the divisions of the functional classification boundaries.

The ASP CFFs are of a shell and tube design that utilizes sintered metal tubes as the filter medium. The shell is a confinement barrier, constructed of stainless steel and designed to PC-3 seismic requirements. The sintered metal tubes are credited as a barrier for the solids in waste for the WWHT (TK-105) and SSFT (TK-109) and downstream processes, but are not designed to PC-3 seismic requirements. The CFFs have a removable head for access to the filter units.

The AFF CFF tube bundles are physically identical to those of the ASP, and are also credited as a barrier for the solids in the filter loops passing to the shell side of the filter. The CFFs have a removable head identical to that of the ASP CFFs, however in the case of a failed AFF filter the entire filter assembly is designed to be removed from the system and replaced.

#### 4.4.1.3 Functional Requirements

To ensure that the process vessel and components perform their credited safety function, the following functional requirements must be met:

- Waste is confined,
- Designated Process vessels and components are designed to satisfy PC-3 seismic requirements,
- Solids are minimized in waste in the WWHT (TK-105), the SSFT (TK-109) and downstream processes, and
- Solids are minimized on the shell side of the CFFs during normal operations.

#### 4.4.1.4 System Evaluation

Process vessels and components are passive systems credited with containment of liquid waste. Because these components provide a safety-related confinement function, all applicable elements of the American Society of Mechanical Engineers (ASME) *Boiler and Pressure Vessel Code*[10], are invoked for vessel design and fabrication. Robust design standards with appropriate corrosion and erosion allowances are used to design the tanks, piping, and other components to endure throughout the operating life of the plant.

Additionally, all connections of piping materials installed in each Process Vessel Cell are welded (i.e., no flanges, gaskets, or jumpers). Specific process vessels (i.e., AST-A [TK-101], FFT-A

[TK-102], SSRT [TK-104], SSFT [TK-109], WWHT [TK-105], SEHT [TK-205], Lab Drain Tank [TK-235], ASP CFF housing, ASP backpulse tanks) and connecting piping are credited for seismic events and are, therefore, categorized as PC-3 components. Other tanks in the Process Vessel Cells (i.e., Solvent Drain Tank [TK-208], ASDT [TK-601], SAST [TK-127], and CSDT-A [TK-103]) provide an SS confinement function for non-NPH events and are therefore categorized as PC-1 components. The Structural Integrity Program will ensure that the process vessels continue to perform their credited functions for the facility life.

The ASP and AFF CFFs are of a shell and tube design that utilizes sintered metal tubes as the filter medium. The shell of the ASP CFFs is a confinement barrier, constructed of stainless steel and designed to PC-3 seismic requirements. The sintered metal tubes in the ASP CFFs are credited as a barrier for the solids in waste in the WWHT (TK-105) and SSFT (TK-109) and the downstream processes, but are not designed to PC-3 seismic requirements. The high turbidity interlocks discussed in Subchapter 4.4.21 provide SS interlocks that stop the feed to the Caustic-side Solvent Extraction (CSSX) process with the detection of excessive solids in the SSFT (TK-109).

In addition, both the ASP and AFF CFF sintered metal tubes act as a barrier for the solids in filter loops passing to the shell side of the filter in the Criticality analysis of Chapter 6.

#### 4.4.1.5 Controls (TSRs)

The process vessels and components are designed for the facility design life, considering the high-radiation environment and the corrosive and erosive nature of the process streams.

The process vessels and components are passive design features and do not require routine maintenance or surveillance to demonstrate operability. The Structural Integrity Program addressed in the TSRs will ensure that the design features continue to fulfill their credited SS functions.

### 4.4.2 Process Vessels: Overflow Lines

The ASDT (TK-601) and Solvent Drain Tank (TK-208) process vessels receive drainage from the CSSX Tank Cells, Contactor Operating Deck, and Contactor Support Floor Area, South Chases (South Utility and CSSX Contactor Pipe Chases), CSSX Pump and Valve Gallery (P&VGs), and ASP P&VG sumps. The ASDT (TK-601) and Solvent Drain Tank (TK-208) process vessels have overflow lines installed to allow overflow to the ASDT Cell area if the volume received exceeds the available tank volume.

The Lab Drain Tank (TK-235) receives drainage from the Laboratory Hot Cells and AFF sampler gloveboxes. The Lab Drain Tank (TK-235) has an overflow line installed to allow overflow to the ASDT Cell area if the volume received exceeds the tank volume.

The AST-A (TK-101), SSRT (TK-104), WWHT (TK-105), and Lab Drain Tank (TK-235) have overflow lines that direct liquid overflowing the vessels to the cell sump. Each overflow line ends within the sump (i.e., below the elevation of the cell floor).

#### 4.4.2.1 Safety Function

Design of the East/West CSSX Tank Cells, CSSX P&VGs, and ASP P&VGs ensures that spills within the respective areas are contained to the specific cell or P&VG and channeled to the drain lines going to the ASDT (TK-601) or Solvent Drain Tank (TK-208). The overflow lines installed on the ASDT (TK-601) and Solvent Drain Tank (TK-208) are sized to ensure that spills within the East/West CSSX Tank Cells, CSSX P&VGs, and ASP P&VGs that drain to the ASDT (TK-601) or Solvent Drain Tank (TK-208) are contained within the ASDT Cell.

Design of the Laboratory Hot Cells and AFF sample gloveboxes ensures that spills within the respective areas are contained and channeled to the drain lines going to Lab Drain Tank (TK-235). The overflow line installed on the Lab Drain Tank (TK-235) is routed to the ASDT Cell sump and is sized to ensure that spills within the Hot Cells and AFF sampler gloveboxes that drain to the Lab Drain Tank (TK-235) are contained within the ASDT Cell.

The AST-A (TK-101), SSRT (TK-104), WWHT (TK-105), and Lab Drain Tank (TK-235) overflow lines direct liquid overflowing the vessels to the cell sump. Each overflow line ends within the sump. The configuration of the overflow line in conjunction with the limited volume of the cell sumps prevents elevated spills from occurring due to vessel overflows and limits the total overflow volume that could splash and aerosolize in the sump before the liquid covers the overflow discharge. Once the sump liquid covers the overflow discharge, any subsequent overflow is a submerged discharge below the liquid surface without the potential for splashing and aerosolization.

Process vessel overflow line SS control is required for the following process vessels and tanks:

- AST-A (TK-101),
- SSRT (TK-104),
- WWHT (TK-105),
- ASDT (TK-601),
- Solvent Drain Tank (TK-208), and
- Lab Drain Tank (TK-235).

Process vessel overflow lines listed above are credited as an SS control (EC-18) for the following DBA event:

- Seismic.

#### 4.4.2.2 System Description

Overflow lines are installed in the vessel to provide maximum liquid level and the minimum vessel vapor space. The overflow lines are routed to the cell sump.

#### 4.4.2.3 Functional Requirements

To ensure that the process vessel design performs its credited safety function, the following functional requirement must be met:

- The overflow lines for Solvent Drain Tank (TK-208) and ASDT (TK-601) provide flow path to the ASDT Cell and are sized to ensure draining of the P&VGs and East/West CSSX Tank Cells;
- The overflow line for Lab Drain Tank (TK-235) provides a flow path to the ASDT Cell and is sized to ensure draining of the Hot Cells and AFF sampler gloveboxes;
- The overflow lines for the AST-A (TK-101), SSRT (TK-104), WWHT (TK-105), and Lab Drain Tank (TK-235) end within the respective cell sump; and
- The overflow lines for the AST-A (TK-101), SSRT (TK-104), WWHT (TK-105), Lab Drain Tank (TK-235), Solvent Drain Tank (TK-208), and ASDT (TK-601) are designed to satisfy PC-3 seismic requirements.

#### 4.4.2.4 System Evaluation

The overflow lines installed on Solvent Drain Tank (TK-208) and ASDT (TK-601) provide a flow path to the ASDT Cell. They are sized to ensure draining of the ASP P&VGs, CSSX P&VGs, and the East/West CSSX Tank Cells, so the spill is contained within the respective area. The overflow line installed on the Lab Drain Tank (TK-235) provides a flow path to the ASDT Cell.

The overflow lines for the AST-A (TK-101), SSRT (TK-104), and WWHT (TK-105) provide a flow path to the respective cell sump which minimizes any aerosolization of waste.

The overflow lines are limited-use devices and are not expected to degrade over their operational lifetime. Additionally, the overflow piping credited during a seismic event is designed to satisfy PC-3 requirements. The evaluations of the overflow piping's ability to withstand PC-3 stresses are documented within the P-CLC-J-xxxxx series of project calculations. The process vessel overflow lines are designed, installed, and tested in accordance with American National Standards Institute (ANSI)/ASME B31.3-2002, *Process Piping*[11].

#### 4.4.2.5 Controls (TSRs)

The process vessel overflow lines are passive design features and do not require routine maintenance or surveillance to demonstrate operability. The Structural Integrity Program addressed in the TSRs will ensure that the design features will continue to fulfill their credited SS function.

### 4.4.3 Process Vessel Grounding – Central Processing Area

#### 4.4.3.1 Safety Function

The process vessels in cells and equipment enclosures within the Central Processing Area (CPA) are grounded in accordance with National Fire Protection Association (NFPA) 30, *Flammable and Combustible Liquids Code*[12], to reduce the potential for a spark from a static discharge and minimize the possibility of explosions and/or fires. The applicable cells and enclosures are the: East and West CSSX Tank Cells, and the Process Vessel Cells (i.e., AST-A, FFT-A, SSRT/WWHT, SSFT, ASDT, and SEHT). The grounding requirement also applies to the Decontaminated Salt Solution (DSS) Coalescer (TK-201).

The HA identified Electrical Grounding as EC-7 for event categories:

- Fire (deflagration) and
- Explosion.

Electrical Grounding is credited as an SS control (EC-7) for the following DBA events:

- Process Cell Fire,
- ASP Vessel Explosion, and
- Seismic (Process Vessel Cells only).

#### 4.4.3.2 System Description

The CSSX East Cell, AST-A Cell, FFT-A Cell, SSRT/WWHT Cell, SSFT Cell, ASDT Cell, and SEHT Cell and associated process vessels have no moving parts or electric motors to cause a spark, and process vessels and tanks are grounded as required by NFPA 30[12] to prevent static generation of a spark as an ignition source. The electrical grounding of process vessels is required to be maintained in the AST-A Cell, FFT-A Cell, SSRT/WWHT Cell, SSFT Cell, ASDT Cell, and SEHT Cell for the seismic event.

The CSSX West Tank Cell tanks contain solvent and are grounded as required by NFPA 30[12] to prevent static generation of a spark as an ignition source. The DSS Coalescer (TK-201) is also grounded as required by NFPA 30[12] to prevent static generation of a spark as an ignition source.

#### 4.4.3.3 Functional Requirements

To ensure that the design feature performs its credited SS function, the following functional requirements must be met:

- The DSS Coalescer (TK-201) and Process vessels contained in East and West CSSX Tank Cells, AST-A Cell, FFT-A Cell, SSRT/WWHT Cell, SSFT Cell, ASDT Cell, and SEHT Cell are appropriately grounded to prevent static generation of a spark as an ignition source; and

- Grounding of vessels in the AST-A Cell, FFT-A Cell, SSRT/WWHT Cell, SSFT Cell, ASDT Cell, and SEHT Cell are required to maintain the ignition control characteristics for the seismic event.

#### 4.4.3.4 System Evaluation

The electrical grounding system is a passive network of conductors that interconnect metallic equipment, electrically energized equipment, and ground rods. This configuration establishes a common zero potential (voltage) among equipment and provides a low resistance path to earth to conduct away from equipment any current caused by electrical shorts, leaks, or statically produced voltage.

The portion of the grounding system supporting the safety function extends from the two grounding points on each of the CPA process vessels; down grounding cables embedded in the CPA wall, floors and basemat; through the grounding grid beneath the CPA basemat, and out to the grounding rods around the perimeter of the structure. This is integrally connected to the rest of the facility grounding grid that provides a non-safety related function. The configuration of the system and qualified components provide multiple electrical conductivity paths to ground to ensure that the system fulfills its safety function. In light of this redundancy, a random failure of one or more components will not impair the safety function of the system. The diverse and redundant ground paths ensure that grounding is effective regardless of any reasonably conceived scenario involving a single path disruption and in many cases, multiple path disruptions.

The Process Vessel Cells (AST-A Cell, FFT-A Cell, SSRT/WWHT Cell, SSFT Cell, ASDT Cell, and SEHT Cell) and their vessels are designed to exclude ignition sources (no moving equipment or electric motors).

The vessels in the CSSX areas (e.g., East/West CSSX Tank Cell) are also designed to exclude ignition sources (no moving equipment or electric motors), however the rooms surrounding the vessels may contain items in classes that could be potential ignition sources (e.g., pump motors, valve actuators).

Process vessels in the AST-A Cell, FFT-A Cell, SSRT/WWHT Cell, SSFT Cell, ASDT Cell, and SEHT Cell are required to remain grounded after the seismic event.

#### 4.4.3.5 Controls (TSRs)

Process vessels in the East/West CSSX Tank Cells, AST-A Cell, FFT-A Cell, SSRT/WWHT Cell, SSFT Cell, ASDT Cell, and SEHT Cell are grounded per NFPA 30[12] to prevent static generation of a spark as an ignition source. The grounding system is a passive design feature and does not require routine maintenance or surveillance to demonstrate operability.

### 4.4.4 Waste Piping

#### 4.4.4.1 Safety Function

Waste piping prevents the release of radioactive material by confining the liquid waste. The following piping systems are classified as SS for waste confinement:

- Process lines within the Process Cells exiting the AST-A (TK-101), FFT-A (TK-102), SSRT (TK-104), SSFT (TK-109), WWHT (TK-105), SEHT (TK-205), CSDT-A (TK-103), ASDT (TK-601), SAST (TK-127), Lab Drain Tank (TK-235), CFF housings, and backpulse tanks;
- Waste Transfer Enclosure (WTE) piping up to the seal plate;
- WTE to AST-A (TK-101) piping;
- North and South ASP P&VG piping that contain material with a potential to cause a significant radiological consequence;
- Sample P&VG piping that contain material with a potential to cause a significant radiological consequence;
- South Chases piping that contain significant potential radioactive material sources provide primary confinement of the waste;
- CSSX P&VG piping that contain material with a potential to cause a significant radiological consequence; and
- HX-250 piping (when connected and operating).

As a subset of the above list, the following piping systems are required to function during and following a seismic event and are qualified to PC-3 requirements:

- Waste piping in the North and South ASP P&VGs;
- Waste piping in the Process Vessel Cell areas that extends the primary confinement boundary of the seismically qualified vessels;
- Waste piping in the WTE, up to the seal plate;
- Sample lines that contain material with a potential to cause a significant radiological consequence from the process vessel (AST-A (TK-101), FFT-A (TK-102), SSRT (TK-104), SEHT (TK-205), and WWHT (TK-105) to the Hot Cell and from the Hot Cell into the process vessel (not including inside the Hot Cell);
- SSFT (TK-109) piping through the CSSX P&VG up to the high point in the Contactor Operating Floor; and
- SEHT (TK-205) piping in the CSSX P&VG and strip effluent recirculation piping to the contactors (via SP-205) up to the high point in the Contactor Operating Deck and Contactor Support Floor Area.

The boundary for the SS waste piping is:

- Piping and valves (pressure boundary) in the major Process Vessel Cells that normally convey monosodium titanate (MST) sludge, MST (radioactive) slurry, Tank Farm solids, or concentrated strip effluent in and downstream of the SEHT (TK-205) are functionally SS. Piping and valves (pressure boundary) in the North and South ASP, Sample and CSSX P&VGs (including flanged connections and pump seals and housing [pressure boundary]) are functionally SS because the areas can be occupied under restricted conditions. Figure 4.6-1 provides a visual description of the divisions of the functional classification boundaries and shows the extent of the SS/PC-3 piping for primary confinement for the normal process paths, recycle process paths, and sample paths.

The HA identified Waste Piping as EC-14 (P&VG), EC-17 (ASP Piping) and EC-12 (Sample Lines) for event categories:

- Direct Exposure,
- Loss of Confinement,
- Fire,
- Explosion, and
- NPH.

Waste Piping is credited as an SS control for the following DBA events:

- (EC-17) Process Cell Fire and
- (EC-17, EC-12 , EC-14) Seismic.

#### 4.4.4.2 System Description

All waste piping is routed through the cells, enclosures, chases, and P&VG labyrinths to ensure proper shielding of personnel. The waste piping is constructed of stainless steel, with appropriate corrosion and erosion allowances. As defined above, waste valves/piping, flanged connections and pump seals and anchors and housing (pressure boundary) are designed as PC-3 NPH requirements.

The Structural Integrity Program will ensure that piping will continue to perform its credited functions for the facility life.

#### 4.4.4.3 Functional Requirements

To ensure that the waste piping performs its credited safety function, the following functional requirement must be met:

- The SS waste piping with boundary defined above (including flanged connections and pump seals and housing as pressure boundary in the P&VGs) confines waste, and

- The seismic subset of SS waste piping defined above (including flanged connections and pump seals and housing as pressure boundary in the P&VGs) confines waste during a seismic event and is designed to satisfy PC-3 seismic requirements.

#### 4.4.4.4 System Evaluation

The SS waste piping confines waste. Additionally, the piping credited for waste confinement during a seismic event is designed to satisfy PC-3 requirements. The evaluations of the piping system's ability to withstand PC-3 stresses are documented within the P-CLC-J-xxxxx series of project calculations. The waste piping is constructed of stainless steel. The process (waste) piping in the SWPF is designed, installed, and tested in accordance with ANSI/ASME B31.3-2002[11]. The Structural Integrity Program will ensure that the piping will continue to perform its credited functions for the facility life.

#### 4.4.4.5 Controls (TSRs)

The waste piping is designed for the facility design life, considering the high-radiation environment and the corrosive and erosive nature of the process streams.

The waste piping (including flanged connections, and pump seals and housing as pressure boundary in the P&VGs) is a passive design feature and does not require routine maintenance or surveillance to demonstrate operability. The Structural Integrity Program addressed in the TSRs will ensure that the design feature will continue to fulfill its credited SS function.

### 4.4.5 Process Building: CPA

#### 4.4.5.1 Safety Function

The safety analysis does not directly credit the CPA structure with preventing a release due to an NPH event. The CPA structure does, however, offer an additional barrier for an NPH event if the primary confinement barrier(s) (i.e., process vessels and piping) were to fail.

The CPA structure is credited with directly supporting the primary vessels and piping and serves as the primary confinement barrier for a seismic event. The CPA structure is, therefore, required to be designed to the same seismic standard as the primary confinement (PC-3). Additionally, the CPA structure prevents the primary confinement components from direct exposure to high winds or tornado missiles. The CPA structure is designed to PC-3 NPH requirements in order to credit it with protecting the primary confinement boundaries.

Structures adjacent to the CPA are designed to prevent sudden and catastrophic failure of the CPA due to an NPH event. Failure of these support structures will, therefore, not result in an unacceptable impact load to the CPA. Any additional residual load imparted by a failure of the support structure members were considered in the design of the CPA structure.

Additionally, the CPA walls surrounding the WTE and Process Vessel Cells are sufficient to absorb energy from a fire and act as a fire barrier. The WTE and Process Vessel Cell walls and ceilings inhibit fire spread from locations external to the cell.

CPA structure is credited as an SS control (IC-4) for the following DBA events:

- Process Cell Fire and
- Seismic

#### 4.4.5.2 System Description

The Process Building is functionally divided into four areas: the CPA, Cold Chemicals Area (CCA), Northern and Eastern Facility Support Areas (FSAs), and the AFF. Systems used to treat radioactive waste and primary support systems are located in the CPA and AFF.

The reinforced concrete construction of the CPA basemat, floors, walls, and ceilings meets PC-3 structural requirements to withstand NPH events. This design also shields workers and the environment from direct radiation exposure and minimizes the release of radioactive waste material to the environment if the primary confinement (provided by process tanks, piping, and equipment) fails.

The FSAs, CCA, and AFF are constructed to meet PC-1 structural requirements. The foundations and superstructures for the FSAs, CCA, and AFF are structurally decoupled from the CPA. Structural interaction evaluations (i.e., two-over-one [II/I] interactions) have been performed for SSCs designed to a lesser PC that could physically interact with and potentially damage an adjacent PC-3 SSC during an NPH event and appropriate design changes implemented, as required. Structural overviews of the Process Building and AFF are provided in Chapter 2.0.

The reinforced concrete construction of the CPA portion of the Process Building basemat, floors, walls, and ceilings meets PC-3 structural requirements to withstand NPH events. It houses the ASP and CSSX processes.

#### 4.4.5.3 Functional Requirements

To ensure that the CPA portion of the Process Building perform its credited safety functions, the following functional requirements must be met:

- Maintain structural integrity of essential areas identified in Subchapter 3.4.2.5 in the seismic event PC-3 (including II/I consideration).
- Provide a structural boundary capable of withstanding a PC-3 High Wind and PC-3 Tornado event for the essential areas identified in Subchapter 2.4.1.
- CPA walls and ceilings surrounding the WTE and Process Vessel Cells are two-hour fire barriers and are sufficient to absorb energy from a fire and act as a fire barrier for internal and external fires.

#### 4.4.5.4 System Evaluation

The CPA portions of the Process Building walls are constructed of reinforced concrete with sufficient thickness to act as a fire wall for all postulated internal and external fire events to ensure that the process vessels are protected in the Process Vessel Cells. However, the credited two-hour fire barriers that prevent fires from spreading into the Process Vessel Cells and the WTE are the walls and ceilings of the Process Vessel Cells and the WTE themselves. A fire rating of four hours can be given to a 7-inch thick reinforced concrete walls (F-FHA-J-00001, *SWPF Project Fire Hazards Analysis*[13]). Because the walls and ceilings of the Process Vessel Cells and the WTE are at least 24-inches thick, they are able to exceed the requirements of a two-hour fire barrier by a considerable margin.

The essential areas identified for a seismic event are designed to satisfy PC-3 seismic and High Wind and Tornado requirements. Functionality is ensured through implementation of the Structural Integrity Program.

#### 4.4.5.5 Controls (TSRs)

The essential areas identified for a seismic event are passive design features and do not require routine maintenance or surveillance to demonstrate operability. The Structural Integrity Program addressed in the TSRs will ensure that the design features will continue to fulfill their credited SS functions.

### 4.4.6 Process Building Control Room, Cells, Enclosures, P&VGs and Pipe Chases

#### 4.4.6.1 Safety Function

The CR provides protection from the direct effects of credible events for the CR Operators.

Unoccupied Cells, Enclosures, and Other Areas: The Onsite-1 (facility) worker is maintained external to the credited cells, and enclosures, which provides protection from the direct effects of credible events within the respective areas.

The following are designed to be unoccupied for the life of the facility and are credited as SS controls:

- AST-A Cell,
- FFT-A Cell,
- SSFT Cell,
- SEHT Cell,
- ASDT Cell,
- SSRT/WWHT Cell,
- East CSSX Tank Cell, and

- WTE.

The following are unoccupied during operations and are classified as SS controls:

- Hot Cells,
- Gloveboxes 8 and 9,
- West CSSX Tank Cell,
- CSSX Contactor Operating Deck and Contactor Support Floor Area,
- South Chases, and
- P&VG Labyrinths (North ASP, South ASP, CSSX, and Sample).

Personnel entry into the Hot Cells; Gloveboxes 8 and 9; CSSX Contactor Operating Deck and Contactor Support Floor Area; West CSSX Tank Cell, South chases, and P&VG Labyrinths is an expected activity following initial commencement of radioactive operations. The Access Control Program described in Subchapter 4.5.12 controls personnel access to all of the bulleted areas above and ensures that appropriate protective measures are established prior to allowing personnel entry.

The HA identified EC-4 (CR) for event categories:

- NPH.

The DBA analysis in Subchapter 3.4 credits the Process Cells designed to be unoccupied for the life of the facility as an SS control (IC-1) for the following:

- IC: Process Cell Fires,
- IC: ASP Vessel Explosion,
- IC: APA Aerosolization, and
- IC: Seismic.

The Control Room (CR) is credited with protection for the CR Operators as an SS control (EC-4) for the following DBA events:

- Seismic.

#### 4.4.6.2 System Description

Most operations involving waste treatment systems, equipment and support systems, and equipment and monitoring are remotely performed from the CR, using the solid state Distributed Control System. The SWPF Distributed Control System is comprised of two separate systems, the Basic Process Control System (BPCS) and the Safety Instrumented System (SIS). The BPCS is responsible for normal operation of the plant and, in many instances, is used in the first layer

of protection against unsafe conditions. The SIS is an independent system composed of sensors, signal processing and logic devices, and support systems. The CR is continuously manned during operations. As part of the CPA, the CR is contained within the PC-3 design and constructed structure.

The SWPF has six Process Vessel Cells containing waste processing tanks and piping. Each cell is constructed of reinforced concrete for NPH protection (PC-3) and gamma radiation shielding.

The floor and bottom portions of the walls in each Process Vessel Cell are provided with a stainless steel liner. The design of equipment inside the Process Vessel Cells precludes the need for hands-on maintenance or local inspection, with the exception of a few components (e.g., valves and CFF replacements), for which remote removal capability is provided.

The Process Vessel Cells are “dark cells”, in which all processes are remotely controlled. The Process Vessel Cells do not contain any process equipment with moving parts and have the ability to be monitored by using closed-circuit television which is inserted through a port. The valve bodies are sleeved to shielded penetrations in the Operating Deck to allow removal and replacement of the valve internals.

Removable shield plugs on the Operating Deck provide access to remove and replace the CFF cartridges. Thermocouple arrays in the process tanks are installed in thermowells that penetrate the tank top and Operating Deck to permit withdrawal and insertion of the array from outside the cell.

Although personnel entry into the Process Vessel Cells is prohibited after the start of radioactive operations, personnel access ports are provided to access the cells from the Operating Deck during construction and commissioning. The ports are closed by shield plugs that require mechanical assistance for removal.

Process Cell sump level instruments are provided in all cells and provides CR alarms on ANN-001 to alert the CR Operator of high sump levels. A sump pump located in the North ASP P&VG can be used to transfer waste or contaminated sump contents to the laboratory for sampling and can divert it to other locations such as a Drum-off Station, ASDT (TK-601), or SSRT (TK-104).

The design of equipment inside the South Chases precludes the need for hands-on maintenance or local inspection. The South Chases are constructed of reinforced concrete. They are designed for anticipated loads, gamma shielding protection, and resistance to NPH events. The walls, floor, and ceilings of this area are designed to satisfy PC-3 seismic requirements.

The design of equipment inside the WTE precludes the need for hands-on maintenance or local inspection. The WTE is constructed of reinforced concrete. The WTE is designed for anticipated loads, gamma shielding protection, and resistance to NPH events. The walls, floor, and ceilings of this area are designed to satisfy PC-3 seismic requirements.

The WTE contains actuated isolation valves to control inter-facility transfers. The valves are sleeved to allow removal and maintenance to be performed from the above Waste Transfer Access Room without breaching WTE confinement. A manway, closed by a shield plug that requires mechanical assistance for removal, is provided for access during construction and commissioning.

The CSSX Tank Cells, CSSX Contactor Operating Deck, and Contactor Support Floor Area are normally unoccupied areas. The CSSX P&VG contains piping and pumps that support the CSSX process; these areas are in a restricted access area and access in these areas is administratively controlled. The walls, floor, and ceilings of these areas are designed to satisfy PC-3 seismic requirements.

The North and South ASP P&VGs are constructed of reinforced concrete. The P&VGs are designed for anticipated loads, gamma shielding protection, and resistance to NPH events. The walls, floor, and ceilings of this area are credited for a seismic event and designed to satisfy PC-3 seismic requirements.

The Sample P&VG is constructed of reinforced concrete. The P&VG is designed for anticipated loads, gamma shielding protection, and resistance to NPH events. The walls, floor, and ceilings of this area are designed to satisfy PC-3 seismic requirements.

#### 4.4.6.3 Functional Requirements

To ensure that the unoccupied cells, enclosures, and P&VGs perform their credited safety functions; the following functional requirements must be met:

- Vessels and piping are located in a cell/enclosure that is designed to be unoccupied for the life of the facility (Process Vessel Cells, WTE, and East CSSX Tank Cell);
- The walls, floor, and ceilings of areas credited for a seismic event are designed to satisfy PC-3 seismic requirements;
- The cells/enclosures are designed to be unoccupied during normal operation (P&VGs, West CSSX Tank Cell, CSSX Contactor Operating Deck and Contactor Support Floor Area, South Chases, and CSSX Contactor Operating Deck);

To ensure that the CR structure performs it’s Safety Function; the following functional requirements must be met:

- The CR structural boundary protects CR Operators from the direct effects of credible events including PC-3 seismic event.

#### 4.4.6.4 System Evaluation

Personnel external to the cells, enclosures, and P&VG labyrinths are protected by a robust structure composed of reinforced concrete, which provides limited confinement of radioactive materials and protection from the direct consequence of postulated events. The cells, enclosures,

and P&VG labyrinths are credited for seismic events and are designed to satisfy PC-3 seismic requirements. The Structural Integrity Program will ensure that the concrete cells, enclosures, and P&VG labyrinths will continue to perform their credited functions. The walls and ceilings of the Process Vessel Cells are fire barriers that inhibit the spread of fire from the CSSX P&VG. The cells, enclosures, and P&VG labyrinths are designed to the appropriate codes identified in P-DB-J-00004[8] and P-DB-J-00002[9].

#### 4.4.6.5 Controls (TSRs)

The Process Cells, enclosures, and P&VG labyrinths are designed for the facility design life, considering the high-radiation environment and potential exposure to the corrosive environment.

The Process Cells, enclosures, and P&VG labyrinths are passive design features and do not require routine maintenance or surveillance to demonstrate operability. The Structural Integrity Program addressed in the TSRs will ensure that the design features will continue to fulfill their credited SS functions.

### 4.4.7 Spill Containment

#### 4.4.7.1 Safety Function

The ASP, Sample, and CSSX P&VGs are credited with containment of spills that occur in the P&VGs. Specifically, the design of the ASP, Sample, and CSSX P&VGs ensures that spills within the P&VGs are contained in the labyrinth area of the specific P&VG and channeled to the drain lines going to the drain tanks in the ASDT Cell (e.g., floor sloping, lower floor elevation with respect to adjacent areas). The CSSX Contactor Operating Deck and Contactor Support Floor Area, East CSSX Tank Cell, West CSSX Tank Cell, South Chases, and Hot Cell also provide spill containment with the spilled liquid draining to drain tanks in the ASDT Cell. Details of the drain lines to the ASDT Cell drain tanks are provided in Subchapter 4.4.8.

The Process Vessel Cells and the WTE provide containment for spills.

Because all of these areas are credited with containment of spills after the occurrence of a seismic event, the structures are classified as PC-3. The liquid containment function is credited for all events. The limited cracking that could occur in the concrete as a result of a seismic event will not be sufficient to cause loss of the credited limited containment function.

The HA identified design of the Process Vessel Cells, WTE, ASP, CSSX, and sample P&VGs, CSSX Contactor Operating Deck and Contactor Support Floor Area, East CSSX Tank Cell, West CSSX Tank Cell, South Chases, Hot Cell, Process Vessel Cells, and WTE for Spill Containment as EC-3 for event categories:

- Fire.

Design of the ASP, CSSX, and sample P&VGs, CSSX Contactor Operating Deck and Contactor Support Floor Area, East CSSX Tank Cell, West CSSX Tank Cell, South Chases, Hot Cell and

Process Vessel Cells, WTE for Spill Containment is credited as an SS control (IC-4, EC-3) for the following DBA events:

- Seismic.

#### 4.4.7.2 System Description

**North ASP P&VG**

The North ASP P&VG is north of the Process Vessel Cells at the 100-foot (ft) elevation. The pumps and their associated suction and discharge piping and valves associated with the AST-A (TK-101) FFT-A (TK-102), and SSRT (TK-104) are contained within five reinforced concrete cubicles, with labyrinth entrances from the corridor along the north wall of the P&VG. The gallery ceiling and exterior and interior walls are constructed of reinforced concrete for shielding purposes and NPH protection. In the floor of each cubicle is a sump with a weir/dam that provides an area to allow any leaks to pool and provide detection. If the leak or spill is large enough, it will overflow the weir/dam and gravity-drain into the ASDT (TK-601) located in the ASDT Cell. The floor of the cubicle is designed to prevent large leaks from spreading into the corridors (e.g., floor sloping, lower floor elevation, with respect to adjacent areas).

**South ASP P&VG**

The South ASP P&VG is south of the Process Vessel Cells at the 100-ft elevation. The interconnecting piping, isolation valves, and process pumps for the WWHT (TK-105), Solvent Drain Tank (TK-208), SAST (TK-127), and ASDT (TK-601) are located in this P&VG. The P&VG is segregated into three reinforced concrete cubicles, with labyrinth entrances from the corridor along the south wall of the P&VG. The gallery ceiling and exterior and interior walls are constructed of reinforced concrete for shielding purposes and NPH protection. In the floor of each cubicle is a sump with a weir/dam that provides an area to allow any leaks to pool and provide detection. If the leak or spill is large enough, it will overflow the weir/dam and gravity-drain into either the Solvent Drain Tank (TK-208) or the ASDT (TK-601), both located in the ASDT Cell. The floor of the cubicle is designed to prevent large leaks from spreading into the corridors (e.g., floor sloping, lower floor elevation, with respect to adjacent areas).

**Sample P&VG**

The Sample P&VG is adjacent to and west of the South ASP P&VG and south of the Process Vessel Cells at the 100-ft elevation. The interconnecting piping, isolation valves, and sample pumps are located in this P&VG. The P&VG is a single reinforced concrete cubicle, with a labyrinth entrance from the corridor along the south wall of the P&VG. The gallery ceiling and exterior and interior walls are constructed of reinforced concrete for shielding purposes and NPH protection. In the floor of the cubicle is a sump with a weir/dam that provides an area to allow any leaks to pool and provide detection. If the leak or spill is large enough it will overflow the weir/dam and gravity-drain into the ASDT (TK-601), located in the ASDT Cell.

**CSSX P&VG Gallery**

The CSSX P&VG (100-ft elevation) is directly below the Contactor Operating Deck and Contactor Support Floor Area and north of the CSSX Tank Cells. It houses the interconnecting piping, isolation valves, and process pumps for the CSSX process associated with the SSFT (TK-109), SEHT (TK-205), Caustic Wash Tank (TK-204), Solvent Hold Tank (SHT) (TK-202), Solvent Strip Feed Tank (TK-217), Strip Effluent Pump Tank (TK-215), and Barium (Ba)-137 Decay Tank (BDT) (TK-206) process vessels. The P&VG is segregated into six reinforced concrete cubicles, with labyrinth entrances from the corridor that runs down the center of the P&VG. The gallery ceiling and exterior and interior walls are constructed of reinforced concrete for shielding purposes and NPH protection. In the floor of each cubicle is a sump with a weir/dam that provides an area to allow any leaks to pool and provide detection. If the leak or spill is large enough, it will overflow the weir/dam and gravity-drain into the Solvent Drain Tank (TK-208), located in the ASDT Cell. The floor of the cubicle is designed to prevent large leaks from spreading into the corridors (e.g., floor sloping, lower floor elevation, with respect to adjacent areas).

**East/West Tank Cells**

The majority of liquid radioactive material in the CSSX section is contained in process vessels located in the CSSX Tank Cell. The CSSX Tank Cell is divided into east and west sides that are separated by a concrete wall. The east side contains the higher-activity tanks and the west side contains tanks of lower activity. The cells are constructed with reinforced concrete floors and walls and stainless steel liners for shielding purposes and NPH protection. The East CSSX Tank Cell has a removable cover block to allow access. A personnel access door is provided to the West CSSX Tank Cell. The West tank cell contains Strip Effluent Coalescer Feed Pumps.

The East and West CSSX Tank Cells each have sumps which normally contain process water to provide a liquid seal for the process vessel overflows. The sumps are normally pumped to the Solvent Drain Tank (TK-208). Each Sump contains a SS standpipe just below the top of the sump which drains to the Solvent Drain Tank (TK-208). See Subchapter 4.4.8.

**Process Cell**

The SWPF has six Process Vessel Cells containing waste processing tanks and piping. Each cell is constructed of reinforced concrete for NPH protection (PC-3) and gamma radiation shielding.

The floor and bottom portions of the walls in each Process Vessel Cell are provided with a stainless steel liner. The design of equipment inside the Process Vessel Cells precludes the need for hands-on maintenance or local inspection, with the exception of a few components (e.g., valves and CFF replacements), for which remote removal capability is provided.

Process Vessel Cell sump level instruments are provided in all cells and provides CR alarms on ANN-001 to alert the CR Operator of high sump levels. A sump pump located in the North ASP P&VG can be used to transfer waste or contaminated sump solution to the laboratory for sampling and can divert it to other locations such as a drum off station, ASDT (TK-601), or

SSRT (TK-104). The Process Cells can hold the quantity of waste contained in the enclosed tanks. The ASDT Cell is the ultimate sink for waste spills external to the Process Cells or WTE.

**Hot Cell**

The Hot Cell is located in the Analytical Laboratory (Hot Laboratory) on the 139-ft elevation of the CPA. The Hot Cells have four drain lines that prevent a spill from sample piping causing an overflow of the stainless steel liner. Hot Cell is constructed of reinforced concrete and leaded glass windows in walls which are designed to satisfy PC-3 seismic requirements. The Hot Cells provide direct shielding from the samples for the immediate workers in the Laboratory. Additionally, a separate ventilation system ensures the flow of air from the occupied areas of the laboratory into the Hot Cells. The Hot Cells also provide containment and confinement for any potential leaks or spills that may occur inside and prevent exposure of immediate workers to the direct effects of leaks or spills.

**WTE**

The WTE is constructed of reinforced concrete. The WTE is designed for anticipated loads, gamma shielding protection, and resistance to NPH events. The walls, floor, and ceiling of this area are designed to satisfy PC-3 seismic requirements. The pipe jacket up to the seal plate is an extension of the WTE confinement boundary.

The WTE is provided with a sump and a leak detector which provides a CR alarm on ANN-001 to alert the CR Operator of high sump levels. The sump can be emptied by a remote pump located in the North ASP P&VG that can be used to transfer waste or contaminated sump solution to the laboratory for sampling and can divert it to other locations such as a drum off station, ASDT (TK-601), or SSRT (TK-104). The WTE has sufficient capacity to contain the normal transfers through the WTE.

#### 4.4.7.3 Functional Requirements

To ensure that the P&VGs, CSSX Contactor Operating Deck and Contactor Support Floor Area, East CSSX Tank Cell, West CSSX Tank Cell, South Chases, and Hot Cell (includes leaded glass windows in walls) perform their credited safety functions; the following functional requirements must be met:

- Provide spill containment with the spilled liquid draining to drain tanks in the ASDT Cell. These functions are credited for all events (including PC-3 Seismic Event). For a seismic event, limited cracking could occur in the concrete; and
- The sumps are designed to collect waste as it accumulates on the floor and channel the waste to the gravity-drain to a hold tank, such as the ASDT (TK-601) or Solvent Drain Tank (TK-208). The sumps are also required to survive a PC-3 seismic event. The credited function is performed by the concrete surrounding the sump, not the non-credited steel liner of the sump.

To ensure that the Process Vessel Cells and the WTE perform their credited safety functions; the following functional requirements must be met:

- The Process Vessel Cells and the WTE provide containment for spills. These functions are credited for all events (including PC-3 Seismic Event). For a seismic event, limited cracking could occur in the concrete.

#### 4.4.7.4 System Evaluation

The floors, walls, and sumps are all passive design features built into each P&VG cubicle, CSSX Contactor Operating Deck and Contactor Support Floor Area, East CSSX Tank Cell, West CSSX Tank Cell, South Chases, and Hot Cell (includes shield windows in walls). They are also required to withstand a PC-3 seismic event and still channel waste to the sump for drainage. Limited cracking could occur in the concrete during the seismic event.

The CPA is designed with six separate Process Cells that contain waste processing tanks, filters, and piping. Each cell is constructed of reinforced concrete for NPH protection and for gamma shielding. The cell floor and bottom portions of the walls are provided with a stainless steel liner for waste containment. The height of the liner is designed to contain the entire inventory of the largest process vessel within the cell or realistic inadvertent transfers due to Operator misalignment of valves. The floors, walls, and sumps are all passive design features built into each Process Vessel Cell. The Process Vessel Cells are also required to withstand a PC-3 seismic event and still confine the spill. Limited cracking could occur in the concrete during the seismic event per the qualitative seismic performance goals for PC-3 stated in DOE-STD-1020-2002[4].

WTE provide containment for spills. The floors, walls, transfer line pipe jacket/seal plate, and sumps are all passive design features built into the WTE. The WTE is also required to withstand a PC-3 seismic event and still confine the spill. Limited cracking could occur in the concrete during the seismic event per the qualitative seismic performance goals for PC-3 stated in DOE-STD-1020-2002[4]. The WTE has sufficient capacity to contain the normal transfers through the WTE.

The CPA is designed to the appropriate codes identified in P-DB-J-00004[8] and P-DB-J-00002[9].

#### 4.4.7.5 Controls (TSRs)

The concrete structures that make up the P&VGs, CSSX Contactor Operating Deck and Contactor Support Floor Area, East CSSX Tank Cell, West CSSX Tank Cell, South Chases, and Hot Cell (includes leaded glass windows in walls), are designed for the facility design life, considering the high-radiation environment and potential exposure to the corrosive environment. The sumps and SS drains for each of these areas are an integral part of the spill containment strategy.

All are passive design features and do not require routine maintenance or surveillance to demonstrate operability. The Structural Integrity Program addressed in the TSRs will ensure that the design features will continue to fulfill their credited SS functions.

The Process Vessel Cells and WTE are designed for the facility design life, considering the high-radiation environment and potential exposure to the corrosive environment. They are passive design features and do not require routine maintenance or surveillance to demonstrate operability. The Structural Integrity Program addressed in the TSRs will ensure that the design features will continue to fulfill their credited SS functions.

### 4.4.8 Drain Lines to ASDT Cell Tanks (ASDT [TK-601], Solvent Drain Tank [TK-208], and Lab Drain Tank [TK-235])

#### 4.4.8.1 Safety Function

Drain lines from the ASP P&VGs, Sample P&VG, CSSX P&VG, CSSX Contactor Operating Deck and Contactor Support Floor Area, South Chases, and East and West CSSX Tank Cells will channel spills (waste and/or solvent) to the ASDT (TK-601) or Solvent Drain Tank (TK-208) in the ASDT Cell. The drain lines mitigate direct exposure of a spill to the facility workers and reduce the probability of large solvent fires by directing waste and solvent leakage to the tanks in the ASDT Cell.

The drain lines from the Analytical Laboratory Hot Cell are passive stainless steel piping that will channel spills (waste and/or solvent) to the Lab Drain Tank (TK-235) in the ASDT Cell. The drain lines mitigate direct exposure of a spill to the facility workers and reduce the severity of large solvent fires by directing waste and solvent leakage to the Lab Drain Tank (TK-235) in the ASDT Cell.

Because the drain lines are credited with containment of spills after the occurrence of a seismic event, the drain lines are classified as PC-3.

The HA identified Drain Lines to ASDT Cell Tanks as EC-13 for event categories:

- Direct Exposure and
- Loss of Confinement.

Drain Lines to ASDT Cell Tanks are credited as an SS control (EC-13) for the following DBA events:

- Seismic.

#### 4.4.8.2 System Description

The drain lines are passive stainless steel piping that gravity-drain from the sumps in the ASP, Sample, and CSSX P&VGs, CSSX Contactor Operating Deck and Contactor Support Floor area and South chases, and East and West CSSX Tank Cells to either the ASDT (TK-601) or Solvent Drain Tank (TK-208) in the ASDT Cell. The drain lines contain a loop seal. The loop seal separates the rooms serviced by the drain lines from the vapor space of the drain tanks, which are maintained at a higher vacuum by the Process Vessel Ventilation System (PVVS). The loop seals also protect the separation of different fire areas. The ASDT (TK-601) and Solvent Drain Tank

(TK-208) overflow to the ASDT Cell that has sump level instrumentation provided with CR alarm on ANN-001, providing Operators with additional indication of a large leak or spill. A detailed discussion related to the sumps can be found in Chapter 2.0.

The drain lines are passive stainless steel piping that gravity-drain from the sumps in the Analytical Laboratory Hot Cell to the Lab Drain Tank (TK-235). The drain line contains a loop seal. The loop seal separates the Hot Cell from the vapor space of the Lab Drain Tank (TK-235), which is maintained at a higher vacuum by the PVVS. The loop seal also protects the separation of different fire areas. The Lab Drain Tank (TK-235) overflows to the ASDT Cell, which has leak detection instrumentation that provides Operators with additional indication of a large leak or spill.

In addition to its drainage function, the drain lines are required to withstand a PC-3 seismic event. The piping is contained in normally unoccupied areas of the facility that are shielded to reduce the possibility of an indirect exposure to the facility workers.

#### 4.4.8.3 Functional Requirements

Functional requirements of the drain lines are:

- Provide a gravity drain from the ASP P&VGs, Sample P&VG, CSSX P&VGs, CSSX Contactor Operating Deck and Contactor Support Floor Area, South Chases, and East and West CSSX Tank Cells sumps to a drain tank, such as the ASDT (TK-601) or Solvent Drain Tank (TK-208) in the ASDT Cell;
- Provide a gravity drain from the Laboratory Hot Cell to the Lab Drain Tank (TK-235) in the ASDT Cell; and
- The drain piping to the ASDT (TK-601), Solvent Drain Tank (TK-208), and Lab Drain Tank (TK-235) is also required to survive a PC-3 seismic event.

#### 4.4.8.4 System Evaluation

The drain lines are all passive design features which are designed, installed, and tested in accordance with ANSI/ASME B31.3-2002[11]. The drain piping is periodically flushed to ensure that there is no blockage in the lines. The piping to ASDT (TK-601), Solvent Drain Tank (TK-208), and Lab Drain Tank (TK-235) is also required to withstand a PC-3 seismic event and still perform its passive drainage function. The evaluations of the drain piping's ability to withstand PC-3 stresses are documented within the P-CLC-J-xxxxx series of project calculations.

The design of the drain lines has been evaluated to ensure that it is sufficient to handle the maximum flush flow rate for the labyrinth walls and floors, which bounds the worst-case process leak rate (M-CLC-J-00096, *SWPF Process Drain Lines Sizing Calculation*[14]). Sustained process leak rates in excess of the maximum flush rate were evaluated to not be credible for the reasons described below.

A sudden double-ended guillotine break of the primary confinement piping, valve body, pump casing, etc., is not considered to be a credible event. Such guillotine break events only apply to high-energy piping systems defined by Branch Technical Position 3.3 of NUREG-0800, *Standard Review Plan for the Review of Safety Analysis Reports for Nuclear Power Plant*[15] as those with temperatures in excess of 200 degrees Fahrenheit and pressures in excess of 275 pounds per square inch gauge. Because the SWPF process waste line design temperatures and pressures are below the high-energy piping criteria, only pipe cracks need to be considered for containment of spills.

Labyrinths have material handling equipment (e.g., monorails, cranes) installed to support maintenance, however dropped loads do not have the potential to result in catastrophic failure of waste confining piping while it is performing its credited containment function. Prior to entering the labyrinth to perform maintenance, TSR SAC 4.5.12 (Access Control Program) ensures that potential hazards in the labyrinth are removed/controlled before the area is entered. This will ensure that waste lines are drained and flushed to the extent necessary and isolated as appropriate from the source vessels. In addition, TSR Administrative Control 5.8.2.5 ensures that a Critical Lift Program is implemented for movement of loads over SS SSCs.

#### 4.4.8.5 Controls (TSRs)

The drains are designed for the facility design life, considering the high-radiation environment and potential exposure to the corrosive environment.

The drains are passive design features. The Structural Integrity Program addressed in the TSRs will ensure that the design features will continue to fulfill their credited SS functions. The Sump Flushing Program addressed in the TSRs will ensure that drain lines requiring a routine demonstration of functionality are flushed periodically.

### 4.4.9 Analytical Laboratory Hot Cells and AFF Sample Gloveboxes

#### 4.4.9.1 Safety Function

The facility worker (Onsite-1) is maintained external to the Hot Cells and AFF Sample Gloveboxes 8 and 9 in the Analytical Laboratory during sampling operations, which provides protection from the direct effects of spills and leaks that may occur in the Hot Cells or glovebox.

The Hot Cell is designed to withstand a PC-3 seismic event and the AFF Sample Gloveboxes 8 and 9 are designed to PC-1 requirements.

The HA identified Hot Cells and AFF Sample Gloveboxes 8 and 9 as EC-6 and EC-9 for event categories:

- Fire,
- Direct Exposure,
- Loss of Confinement, and

- NPH (Hot Cell).

The Hot Cells are credited as SS controls (EC-9) for the following DBA events:

- Seismic.

#### 4.4.9.2 System Description

The SWPF will require radioactive and chemical sampling and analysis capability to: 1) determine the composition of the SWPF feed batches from the Tank Farms, 2) verify performance of process/equipment/systems, 3) qualify products for transfer to the Saltstone Production Facility and Defense Waste Processing Facility, and 4) verify composition of makeup chemicals. Some sampling and analysis will also be required to ensure that environmental monitoring and regulatory permit requirements are satisfied. Process control samples will be analyzed for radionuclide constituents on an as-soon-as-possible basis to allow for timely processing of batches within the SWPF.

A primary concern with SWPF sampling is the hazard level associated with radiation exposure in obtaining or handling a sample. To maintain radiation doses as low as reasonably achievable, special sampling and sample handling precautions must be taken. The highly radioactive waste samples from the Alpha Removal Process and from the SEHT (TK-205) are collected from the associated tanks in the Analytical Laboratory Hot Cells by pumping liquid from the tank to the Hot Cell. Less radioactive samples from the AFF process are collected in a similar manner from the associated tanks in the Analytical Laboratory in a glovebox.

The Hot Cells provide direct shielding from the samples for the immediate workers in the Laboratory. Additionally, a separate ventilation system ensures the flow of air from the occupied areas of the laboratory into the Hot Cells or Gloveboxes. The Hot Cells and gloveboxes also provide containment and confinement for any potential leaks or spills that may occur inside and prevent exposure of immediate workers to the direct effects of leaks or spills. For the Hot Cells and gloveboxes to perform their airborne confinement function when needed, they interface with and are supported by three other SS SSCs. First, the Analytical Laboratory Ventilation System (SS) directs the exhaust flow from the Hot Cell and Sampler Gloveboxes to High-efficiency Particulate Air (HEPA) filters via SS ductwork. Second, the Process Building Ventilation System (PBVS) exhaust fans (SS) provide motive force for flow through the Hot Cell and Sampler Gloveboxes and maintain appropriate vacuum in those areas when necessary to support sampling activities. Third, the Hot Cell/Glovebox low vacuum interlocks (SS) ensure that sample pumps are stopped if inadequate vacuum is present in these locations to support sampling activities. All three of these interfacing and support systems have the same functional classification as the Hot Cells and Sample Gloveboxes.

The Analytical Laboratory Hot Cells and AFF Sample Gloveboxes 8 and 9 have been designed to the appropriate codes identified in P-DB-J-00004[8] and P-DB-J-00002[9] to ensure adequate reliability.

#### 4.4.9.3 Functional Requirements

To ensure that Analytical Laboratory Hot Cells and AFF Sample Gloveboxes 8 and 9 perform their credited safety functions, the following functional requirement must be met:

- The Hot Cells and Gloveboxes 8 and 9 prevent the spread of radioactive materials to protect the immediate worker from direct effects of leaks or spills and
- The Hot Cells are designed to satisfy PC-3 seismic requirements.

#### 4.4.9.4 System Evaluation

The Hot Cells are robust structures consisting of reinforced concrete with thick, leaded-glass windows. The Hot Cells are provided with liners and sumps with drains to ensure no accumulation of any spills or leaks of radioactive materials that occur inside the Hot Cell. The physical strength of a Hot Cell ensures the protection of immediate workers located outside the Hot Cell from the physical effects of any credible spill or leak event that occurs inside the Hot Cell.

The gloveboxes are made of stainless steel and high-strength polymers. The gloveboxes are provided with liners and drains to ensure no accumulation of any spills or leaks of radioactive liquid that occurs inside the glovebox. The glovebox structure protects workers located inside the Laboratory from the physical effects of any credible spill or leak event that occurs inside the Glovebox 8 and 9.

To ensure that the Analytical Laboratory Hot Cells and AFF Sample Gloveboxes 8 and 9 perform their credited function, they are designated as SS. The Hot Cells are required to maintain their structural integrity following a seismic event so they can channel leaks or spills to the Lab Drain Tank (TK-235) and are, therefore, designed to meet PC-3 requirements. Gloveboxes 8 and 9 are not required to perform their function after an NPH event; therefore, they are designed to meet PC-1 NPH requirements.

The Analytical Laboratory Hot Cells and AFF Sample Gloveboxes 8 and 9 have been designed to the appropriate codes identified in P-DB-J-00004[8] and P-DB-J-00002[9] to ensure adequate reliability.

#### 4.4.9.5 Controls (TSRs)

The Analytical Laboratory Hot Cells and AFF Sample Gloveboxes 8 and 9 are designed for the life of the facility, with the exception of consumable parts (e.g., gloves) that will be replaced before gross failure, considering the radiological environment and potential exposure to the corrosive environment.

The Hot Cells and AFF Sample Gloveboxes 8 and 9 are passive design features and do not require routine maintenance or surveillance to demonstrate operability. The Structural Integrity

Program addressed in the TSRs will ensure that the design features continue to fulfill their credited SS functions.

### 4.4.10 APAs and Supporting Plant Air Sub-System

#### 4.4.10.1 Safety Function

The sub-system of the Plant Air System supporting operation of the APAs has two safety functions discussed below.

The Plant Air lines to the APA pulse pots are required to remain operable after all credible accidents (including seismic) to ensure that waste in the ASP tanks (AST-A [TK-101], FFT-A [TK-102], SSRT [TK-104], SSFT [TK-109] and WWHT [TK-105]) can be periodically agitated through the APA pulse pots to release any trapped gas. The APA air supply lines within the Process Cells and an available stub-out connection points for portable air compressor(s) external to the Process Cells are seismically qualified (PC-3). This provides a DID post-seismic recovery capability.

The second safety function is prevention/mitigation of the APA aerosolization event. The Plant Air supply lines to the APA pulse pots in the process vessels are required to maintain integrity (including post-seismic) to prevent an air line break, as such a break could result in air-liquid jet impingement. In addition, mitigation of the aerosolization is achieved by limiting the Air Flow and velocity of air impinging on the waste in process vessels. Certain APA system design parameters are credited as SS design features (i.e., head losses through configuration of air supply lines and APA nozzle diameter greater than minimum air supply line diameter). These passive design features limit the amount of radioactive material released during an aerosolization event in the AST-A (TK-101), FFT-A (TK-102), SSRT (TK-104), SSFT (TK-109), or WWHT (TK-105) vessels. In addition a credited restrictive flow orifice located in each of the FFT-A, SSRT, WWHT, and SSFT vessel APA air supply lines also limits the velocity and mass flow rate of an air jet to mitigate the consequences.

The HA identified APAs and Supporting Plant Air Sub-System as EC-10 for event categories:

- Loss of Confinement.

APAs and Supporting Plant Air Sub-System are credited as an SS control for the following DBA events:

- (EC-10, EC-20, EC-21) APA Aerosolization, and
- (EC-20, EC-21) Seismic.

#### 4.4.10.2 System Description

The SS system boundary for the Plant Air lines to the APAs includes pulse pots, lines from the vessel wall to the pulse pots, and lines entering the cell that supply air to the APAs, up to and

including an isolation valve external to the Process Vessel Cells. This isolation valve is upstream of the access flange or header that is provided for installation of portable compressed air. This boundary provides the DID safety functions for seismic event. The 2-inch supply line in the process vessel is smaller than the pulse jet nozzle. Because the lines are credited post-seismic, the piping within this boundary is designed to satisfy PC-3 seismic requirements. Also included within the SS boundary are the orifices (not credited) and minimum flow resistance through configuration of air supply valves and lines. In addition, credited Restrictive Flow Orifices are provided in the APA air line for the following process vessels (FFT-A [TK-102], SSRT [TK-104], WWHT [TK-105], and SSFT [TK-109]) to further reduce the air flow rate and mitigate any Aerosolization event consequences.

#### 4.4.10.3 Functional Requirements

To ensure that the APA air supply line performs its credited safety functions, the following functional requirements must be met:

- The 2-inch air supply line diameter feeding the APA pulse jet are smaller than the APA pulse jet nozzle diameter;
- Head losses through configuration of air supply lines from the respective Process Vessel APA Charge Tank to the individual APAs limit the air flow rate and velocity of air impinging on waste in process vessels is limited to less than analyzed values (AST-A [TK-101], FFT-A [TK-102], SSRT [TK-104], WWHT [TK-105], and SSFT [TK-109]);
- In-vessel Air Supply Piping and the APAs (AST-A [TK-101], FFT-A [TK-102], SSRT [TK-104], WWHT [TK-105], and SSFT [TK-109]) are designed to satisfy PC-3 seismic requirements.
- Restrictive Flow Orifices are sized as analyzed to limit the air flow rate to be within the values specified in the accident analysis (AA) in process vessels (FFT-A [TK-102], SSRT [TK-104], WWHT [TK-105], and SSFT [TK-109]), and
- To ensure that the air systems perform their DID safety functions for seismic event, the APA Plant Air System within the boundary defined above (Out to isolation valve external to the Process Vessel Cells) for ASP tanks (AST-A [TK-101], FFT-A [TK-102], SSRT [TK-104], SSFT [TK-109] and WWHT [TK-105]) is designed to satisfy PC-3 seismic requirements.

#### 4.4.10.4 System Evaluation

The SS credited controls for PC-3 seismic design of the Plant Air supply lines, 2-inch supply line, and pulse jet nozzle larger than the in vessel air supply line are passive design features. Conservatively calculated head losses based on the configuration of air supply lines from the respective Process Vessel APA Charge Tank to the individual APAs limit the air flow rate as shown in S-CLC-J-00027, *Pulse Jet Mixer Air Jet Aerosolization Event Accident Analysis*[16], for AST-A [TK-101], FFT-A [TK-102], SSRT [TK-104], SSFT [TK-109] and WWHT [TK-105]). In addition, credited Restrictive Flow Orifices are sized as analyzed to limit the air flow rate to be within the values specified in the AA in process vessels (FFT-A [TK-102], SSRT [TK-104], WWHT [TK-105], and SSFT [TK-109]).

The piping is stainless steel pipe. The Structural Integrity Program addressed in the TSRs will ensure that the design features continue to fulfill their credited SS functions.

The PC-3 seismic design of the Plant Air supply lines is a passive design feature. The evaluations of the piping's ability to withstand PC-3 stresses are documented within the P-CLC-J-xxxxx series of project calculations. The Plant Air piping is stainless steel pipe. The Structural Integrity Program addressed in the TSRs will ensure that the design features continue to fulfill their credited SS functions.

#### 4.4.10.5 Controls (TSRs)

The SS credited controls for PC-3 seismic design of the Plant Air supply lines to the Air Dilution System (ADS) header and APA, and the 2-inch supply line in the process vessel (which is smaller than the pulse jet nozzle) are passive design features and are designed for their operational life, considering the Plant Air quality. The design of the credited supply lines in the process vessel considered the environment within the process vessel. They do not require routine maintenance or surveillance to demonstrate operability. The Structural Integrity Program addressed in the TSRs will ensure that the design features continue to fulfill their credited SS functions.

### 4.4.11 PVVS

#### 4.4.11.1 Safety Function

The safety function is mitigation of the in- vessel aerosolization event. The PVVS ensures that airborne releases from non-NPH in-vessel events are not allowed to exit the CPA without being filtered. The SS function applies to the following vessels: AST-A (TK-101), FFT-A (TK-102), SSRT (TK-104), SSFT (TK-109), WWHT (TK-105), CSDT-A (TK-103), ASDT (TK-601), Lab Drain Tank (TK-235), Solvent Drain Tank (TK-208), SAST (TK-127), and SEHT (TK-205).

Also, the PVVS in-cell piping associated with the AST-A (TK-101), FFT-A (TK-102), SSRT (TK-104), SSFT (TK-109), SEHT (TK-205), and WWHT (TK-105) (up to and including the first isolation valve/damper external to the cells) is classified as PC-3 to provide the capability to ventilate the process vessels after a seismic event. This provides additional DID to maintain an air purge on the vessels to prevent a vessel explosion in addition to the seismically qualified portion of the ADS.

The HA identified PVVS as EC-8 for event categories:

- Fire,
- Explosion, and
- Loss of Confinement.

The PVVS is credited as an SS control for the following DBA events:

- (EC-8) APA Aerosolization and
- (EC-22) Seismic.

A discussion of the credited PVVS instrumentation and alarms is provided in Subchapters 4.4.24 and 4.4.26.

#### 4.4.11.2 System Description

The PVVS maintains a negative pressure in the process vessels vapor space, with respect to the Process Cell, to ensure that contaminated vapor in the vessel does not migrate to the Process Cell. The PVVS also aids in purging flammable vapors from the process vessel vapor space to preclude potential explosions. Figure 4.6-2 provides a simplified diagram of the ADS and PVVS.

The PVVS draws air through the process vessel vapor space for vessels with orifices. The PVVS exhaust fans create a negative pressure in the process vessel vapor space. This allows air to be drawn into the process vessel from the surrounding Process Cell through the process vessel orifice vent. The ability of the PVVS to exhaust flammable vapors from the process vessels is not a credited SS function. The ability of PVVS to maintain vessels with inlet orifices at or below 25% of their Composite Lower Flammability Limit (CLFL) was an initial condition assumed in the safety basis calculations. The PVVS low vacuum alarm (Subchapter 4.4.24) is credited with an SS function of alerting Operators that this initial condition may not be met. Therefore, the PVVS fans are not credited as active SS components and a safety-related power source for the fan motors is not required.

The PVVS includes redundant exhaust air treatment systems. Each exhaust train includes a cooler, demister, heater, pre-filter, and two stages of HEPA filters. Each exhaust air treatment train also includes a 100 percent (%)-capacity exhaust fan. One of the two exhaust air treatment trains is normally in operation, with the second in standby. The PVVS exhaust fans discharge to the Process Building exhaust header, which discharges to the plant stack.

The PVVS is monitored by the following SS instrumentation:

- Differential pressure (dP) alarm used by the Operator(s) to verify that negative pressure is maintained in the process vessels and tanks, and

This PVVS instrumentation is detailed in Subchapter 4.4.24.

The PVVS exhaust HEPA filters are monitored by the following instrumentation:

- dP indicators and Hi dP alarms on the PVVS exhaust HEPA filters to alert Operators to HEPA filter plugging (high dP).

The Hi dP alarms are not referenced in Chapter 3. This Alarm is classified as an SS Alarm and is designated as control number SSC-1. The Hi dP alarms on the PVVS exhaust HEPA filters are detailed in Subchapter 4.4.26.

The PVVS piping within each cell from the AST-A (TK-101), FFT-A (TK-102), SSRT (TK-104), SSFT (TK-109), SEHT (TK-205), and WWHT (TK-105) (up to and including the first isolation valve/damper external to each cell) is designed to PC-3 seismic requirements. This allows for a DID post-seismic event recovery of ventilation to the process vessels (PVVS).

#### 4.4.11.3 Functional Requirements

To ensure that the ventilation system performs its credited safety functions, the following functional requirements must be met:

- PVVS provides a flow path to the PVVS Filter from Process Vessels (AST-A [TK-101], FFT-A [TK-102], SSRT [TK-104], SSFT [TK-109], WWHT [TK-105], CSDT-A [TK-103], ASDT [TK-601], Lab Drain Tank [TK-235], Solvent Drain Tank [TK-208], SAST [TK-127], and SEHT [TK-205]);
- PVVS in-cell piping associated with the AST-A (TK-101), FFT-A (TK-102), SSRT (TK-104), SSFT (TK-109), SEHT (TK-205), and WWHT (TK-105) (up to and including the first isolation valve/damper external to the cells) is PC-3.

#### 4.4.11.4 System Evaluation

The PVVS is credited with maintaining a filtered pathway for the exhaust air because the PVVS flow path from the process vessels directs flow out of the CPA through the PBVS exhaust ducting without passing through the PBVS exhaust HEPA filters. The PVVS fans/motors do not perform credited confinement functions because, if the fans stop, the vessels would go to the same pressure as the Process Cells and the PBVS would confine and filter any airborne releases. Therefore, electrical power is not required to be classified as an SS support system for the PVVS fans.

To ensure the ability of the PVVS to accomplish its credited functions, the exhaust HEPA filters must remove radioactive particulates from the exhaust air flow from the process vessels, and the filter housings must direct the exhaust air flow through the filters. The PVVS piping/ductwork from specific process vessels up to the HEPA filters must be available to ensure that the exhaust air is directed through the HEPA filters and are designated as SS. Figure 4.6-2 provides a simplified diagram of the PVVS and shows the Functional Classification boundaries for the PVVS.

The PVVS ductwork/piping designated as SS ensures that contaminated air is directed through the HEPA filters and provides protection to the facility worker. The portion of the PVVS ductwork/piping that is of concern is the ductwork passing through areas that are routinely accessible during normal operations (e. g., corridors, operating decks, ventilation rooms). PVVS piping/ductwork in P&VG labyrinths is also designated as SS because of its proximity to workers in the adjacent corridors. PVVS ductwork in areas that have controlled/prohibited access and are ventilated by the PBVS (e. g., contactor areas, Process Vessel Cells, CSSX Tank Cells) is not required to be designated as SS to provide protection for the facility worker because any releases into these areas would be exhausted by the PBVS (via filters to protect the co-located

worker for non-NPH events) without resulting in significant consequences to the in-facility worker. PVVS in non-ventilated areas (pipe chases, Heating, Ventilating, and Air Conditioning [HVAC] chase) are designated SS because there are no other credited SSCs that prevent airborne releases into those areas reaching in-facility workers.

To ensure that PVVS piping is functional after a seismic event for selected vessels, the PVVS piping from the AST-A (TK-101), FFT-A (TK-102), SSRT (TK-104), SSFT (TK-109), SEHT (TK-205), and WWHT (TK-105) is designed to satisfy PC-3 seismic requirements through the Process Vessel Cells and into the process vessels, up to and including the first isolation valve or damper external to each cell, including the associated cell penetrations. This is DID for recovery after a seismic event. The evaluations of the PVVS piping's ability to withstand PC-3 stresses are documented within the P-CLC-J-xxxxx series of project calculations.

The PVVS components are designed to the appropriate codes identified in P-DB-J-00004[8] and P-DB-J-00002[9].

#### 4.4.11.5 Controls (TSRs)

The SS credited ventilation ducts and pipes around each cell are designed for the facility design life, considering the high-radiation environment and the corrosive and erosive nature of the process streams.

The SS credited ventilation pipes around each cell are a passive design feature and do not require routine maintenance or surveillance to demonstrate operability. The Structural Integrity Program addressed in the TSRs will ensure that the design feature will continue to fulfill its credited SS function.

The SS-credited HEPA filters are continuously monitored for high dP to ensure that the filters are available and the filter is not plugged. The HEPA filters are also subject to the periodic testing/surveillance program addressed in the TSRs.

### 4.4.12 ADS and Supporting Plant Air Sub-System

#### 4.4.12.1 Safety Function

The ADS maintains a continuous air purge to select vessels and equipment at a rate sufficient to maintain the vapor spaces below flammable conditions. The ADS flows are set to keep vessels below 100% of CLFL as long as each vessel temperature does not exceed its analyzed value (10-day adiabatic heatup). The back-up air receivers for the ADS are sized to provide the inventory of pressurized air necessary to meet the system loads for at least four days after an event that causes a loss of the normal air supply to the ADS. The ADS automatically switches to the credited back-up supply upon loss of the non-credited normal supply. This ensures that the ADS maintains a continuous air flow to the vessels. The four-day supply provides sufficient time to connect a portable air compressor to maintain the ADS system flows.

A connection point for a portable air compressor is provided to the ADS by the Plant Air System to allow a portable compressor to be used as an alternate air source.

The ADS also provides sufficient air flow to the SHT (TK-202), DSS Coalescer (TK- 201), Solvent Strip Feed Tank (TK-217), and CSSX contactor vent header to maintain the vapor spaces below 25% of CLFL. The SHT (TK-202), Solvent Strip Feed Tank (TK-217), and CSSX contactor vent headers have only a single ADS flow path set to meet the higher of the two flow requirements (i.e., maintain vapor space below 25% of CLFL or maintain vapor space below CLFL for four days). There are two flow paths from the ADS to the Solvent Drain Tank (TK-208). The first provides sufficient flow to maintain the Solvent Drain Tank (TK-208) vapor space below CLFL from the ADS distribution header, including feed from the backup air receivers. The second provides sufficient flow to maintain the Solvent Drain Tank (TK-208) vapor space below 25% of CLFL and is supplied only from the normal (not SS) Plant Air supply and is not aligned to the back-up air receivers.

The ADS piping internal to the Process Vessel Cells (SSFT Cell, SEHT Cell, AST-A Cell, FFT-A Cell, ASDT Cell, and SSRT/WWHT Cell) up to and including the flow control element (e.g., pressure regulator/control valve and rotameter assembly) and connection point to each vessel internal to those cells is designed to PC-3 standards. The vessels receiving ADS flow from this PC-3 piping are: SSFT (TK-109), SEHT (TK-205), AST-A (TK-101), FFT-A (TK-102), Solvent Drain Tank (TK-208), ASDT (TK-601), SAST (TK-127), Lab Drain Tank (TK-235), CSDT-A (TK-103), SSRT (TK-104) and WWHT (TK-105). This design feature is credited in the Safety Basis to prevent a post-NPH event explosion (100% CLFL) in a process vessel that could result in a prompt fatality or life-threatening injury to a facility worker for the 10 day period after the Seismic event. Supply piping in the Process Vessel Cells is designed as PC-3 to provide an ongoing long-term capability to provide dilution air to the process vessels to prevent a vessel explosion. Figure 4.6-2 provides a simplified diagram of the ADS and shows the Functional Classification boundaries for the ADS.

The connection point for a portable air compressor described above also provides for DID post-NPH event recovery. The applicable Plant Air lines to the ADS (see Figure 4.6-2) are required to remain operable after all credible accidents (including seismic) to ensure an air source from the portable air compressor is provided to the ADS headers. The four day supply provided by the ADS back-up air receivers provides sufficient time to connect portable air compressor(s). The ADS flows keep vessels below 100% of CLFL as long as each vessel temperature does not exceed its analyzed value (10 day adiabatic heatup). This function is also provided for DID post-seismic recovery.

The HA identified ADS as EC-1 for event categories:

- Fire (deflagration)and
- Explosion.

The HA identified ADS Backup Air Receivers as EC-2 for event categories:

- NPH.

The ADS and Supporting Plant Air Subsystem are credited as an SS control (EC-1, EC-2) for the following DBA events:

- ASP Vessel Explosion and
- Seismic.

#### 4.4.12.2 System Description

Figure 4.6-2 provides a simplified diagram of the ADS and PVVS. The ADS supplies purge air to the select process vessels and equipment during normal, accident, and post-seismic conditions.

During normal operation, the purge air is supplied by a dedicated stainless steel common supply header that connects to the Plant Air System. The supply header from the Plant Air System contains two pairs of pressure regulators in parallel that maintain the air supply to the ADS from the Plant Air System at a constant pressure. Each regulator package also contains manual isolation valves to individually isolate the pairs of pressure regulators from the system. A check valve on the common discharge of the pressure regulators prevents backflow to the Plant Air System from the ADS piping.

From the ADS supply header, stainless steel line is routed to each process vessel or equipment supplied with purge air. The line contains parallel, self-contained flow-indicating control valves that automatically control the purge supply flow rate to the process vessel. Manual isolation valves on the inlet and outlet of each flow-indicating control valve (FICV) provide individual isolation. One of the two flow-indicating control valves is normally in operation, with the second on standby (isolated). From the discharge of the flow-indicating control valves, a stainless steel line is routed to the process vessel.

If the Plant Air System is unavailable to supply compressed air to the ADS header due to system failure, Loss of Power (LOP), or a seismic event, back-up compressed air is automatically supplied to the ADS header by two dedicated compressed air receivers. The back-up ADS air receivers are of sufficient combined size to provide continuous air purge to the ADS loads for four days following a loss of the normal purge air supply from the Plant Air System. The back-up ADS air receivers are normally maintained above a minimum air pressure by a dedicated air compressor. Because the back-up ADS air receivers are self-sufficient for at least four days, neither the Plant Air System compressors nor the ADS air compressor are classified as SS support systems. Therefore, all permanently installed air compressors do not require a safety-related power source.

The air inventory of the receivers is monitored by a SS low-pressure alarm on the common discharge header. Each receiver supplies a common header. The supply header from the back-up ADS air receivers contains two pairs of pressure regulators in parallel that maintain the air

supply to the ADS from the receivers at a constant pressure. An SS CR alarm will alert Operators to a low-pressure condition downstream of the pressure regulators (based on minimum required inlet pressure for the constant flow FICVs) because the low pressure will result in a reduced air flow rate to the individual process vessels, allowing flammable vapor concentrations to increase. Each regulator package also contains a pressure relief valve to prevent over-pressurization of the ADS piping, along with manual isolation valves to individually isolate the pairs of pressure regulators from the system.

The pressure regulators for the two ADS air sources are set to automatically provide switchover of the purge air supply from the Plant Air System to the back-up air receivers in the event of failure of the Plant Air System supply. During normal operation, when the Plant Air System is supplying purge air, pressure from the Plant Air System keeps the regulators in the back-up air receivers common discharge header closed, preventing discharge of the Back-up Air Receivers. Upon loss of flow from the Plant Air System, pressure in the purge air supply line will decrease and the pressure regulators in the line from the back-up air receivers will gradually open when the pressure has decreased sufficiently. The check valve on the common discharge from the pressure regulators from the Plant Air System will close. This arrangement guarantees an uninterrupted supply of purge air to the process vessels and equipment vapor spaces.

All piping and components in the ADS required to provide the back-up purge air supply from the air receivers to the vessels located in the Process Vessel Cells are credited for operation after a seismic event. Therefore, they are classified as SS and have a seismic design category of PC-3. The vessels receiving ADS flow from PC-3 piping in the Process Vessel Cells are: SSFT (TK-109), SEHT (TK-205), AST-A (TK-101), FFT-A (TK-102), Solvent Drain Tank (TK-208), ASDT (TK-601), SAST (TK-127), Lab Drain Tank (TK-235), CSDT-A (TK-103), SSRT (TK-104) and WWHT (TK-105).

The normal purge air supply up to a manual isolation valve upstream of the pressure regulators is classified as GS and the seismic design category is PC-1.

The ADS supply line to the vessels in the CSSX Tank Cells and to the CSSX contactor vent header are not credited for operation after a seismic event. Therefore, from the discharge of the flow-indicating control valves (PC-3) to the tanks and vent header, the lines are classified as SS and have a seismic design category of PC-1. The CSSX vessels which receive ADS flows are: SHT (TK-202), DSS Stilling Tank (TK-211), DSS Coalescer (TK- 201), BDT (TK-206), Caustic Wash Tank (TK-204), Strip Effluent Pump Tank (TK-215), Strip Effluent Stilling Tank (TK-212), Strip Effluent Coalescer (TK-203), and Solvent Strip Feed Tank (TK-217).

The Solvent Drain Tank (TK-208) is the only process vessel that is provided with two supply lines from ADS. The first line is designed to provide sufficient air flow to the Solvent Drain Tank (TK-208) to maintain the vapor space below 25% of CLFL. This line is connected to the normal purge air supply line of the ADS downstream of the pressure regulators. This air supply is not credited for operation after a seismic event, so it is classified as SS and has a minimum seismic design category of PC-1. Because the system design connects both ends of this air supply line into PC-3 piping, the line itself is classified as PC-3 to minimize and simplify the interfaces

between PC-3 and PC-1 piping. An SS CR alarm will alert Operators to a low-pressure condition downstream of the pressure regulators because the low pressure will result in a reduced air flow rate through this purge path and could result in the Solvent Drain Tank (TK-208) exceeding 25% of CLFL. The second air line is designed to provide sufficient air flow to the Solvent Drain Tank (TK-208) to maintain the vapor space below CLFL, following a loss of normal flammable gas control for the Solvent Drain Tank (TK-208). This line is connected to the back-up air purge supply line of the ADS downstream of the pressure regulators. This air supply line is credited for operation after a seismic event, so it is classified as SS and has a seismic design category of PC-3.

The SS system boundary for the Plant Air lines to the ADS includes a connection point for a portable air compressor to augment the back-up air receivers in the ADS and an isolation valve to isolate the non-qualified portion of the Plant Air System. This Plant Air line to the ADS (see Figure 4.6-2) is required to remain operable after all credible accidents (including seismic) to ensure an air supply from the portable air compressor can be provided to the ADS headers.

The ADS has been designed to the appropriate codes identified in P-DB-J-00004[8] and P-DB-J-00002[9] to ensure adequate reliability in the system.

#### 4.4.12.3 Functional Requirements

To ensure that the ADS purge air supply to the selected process vessels and equipment performs its credited safety functions, the following functional requirements must be met:

- During normal operation, the ADS must continuously supply sufficient purge air flow from the Plant Air System to the Solvent Drain Tank (TK-208), SHT (TK-202), DSS Coalescer (TK-201), Solvent Strip Feed Tank (TK-217), and contactor vent header to maintain the flammable vapor concentration in the vapor space below 25% of CLFL (IC); and
- Upon loss of normal purge air flow, the ADS must continuously supply sufficient purge air from the back-up ADS air receivers to the identified ASP and CSSX process vessel and equipment vapor spaces to maintain the flammable vapor concentration in the vapor spaces below 100% of CLFL for a period of four days.

To ensure that the ADS purge air supply to the process vessels in the Process Cells performs its credited safety function for a seismic event, the following functional requirements must be met:

- ADS piping in the AST-A, FFT-A, SSFT, SEHT, SSRT/WWHT, and ASDT Process Cells must remain intact to allow flow to the vessels after connection of a portable compressed air supply.

To ensure that the ADS air supply line performs its credited safety functions, the following functional requirements must be met:

- The Plant Air System within the boundary defined above is available for providing air to the ADS header, using a portable compressor. This function is also DID seismic event recovery (beyond 10 days) and meets PC-3 design requirements.

#### 4.4.12.4 System Evaluation

Because of the radioactive material content of the waste liquid in the SWPF process and the potential presence of significant quantities of CSSX solvent throughout the process, significant quantities of flammable vapors are generated by radiolysis of the water and solvent and due to the vapor pressure of the flammable solvent itself. To prevent the possibility of an explosion occurring in vapor space or a vessel or other equipment, the flammable vapors must be purged from the vapor space to ensure that flammable concentrations of the vapors do not accumulate.

Calculation S-CLC-J-00083, Revision 0, ADS Flow Minimum Value for TSRs, provides the required individual Process Vessel Air Purge Flow rates. Interoffice Correspondence 00-700-17240, Revision 2, Air Purge Flow Requirements for Backup Air Receiver Tanks (TK-505 and TK-506) provides the operational requirements to validate the flow rates chosen. Nominally the air flow rates were derived assuming 12 hour recirculating pump runs. The following provides deviation from the 12 hour pump operation which were not identified in Inputs and Assumptions of Subchapter 3.4.1.3:

- Operators stop recirculating pumps for Strip Effluent Pump Tank and Solvent Strip Feed Tank within 2 hours of SS East CSSX Tank Cell Flow Alarm addressed in Subchapter 4.4.25.

- Operators stop recirculating pumps for Solvent Drain Tank (TK-208) within 2 hours of SS ASDT Cell Flow Alarm addressed in Subchapter 4.4.25.

- Operators stop recirculating pumps for SHT within 2 hours of SS West CSSX Tank Cell Flow Alarm addressed in Subchapter 4.4.25

During normal operation, the ADS must continuously supply sufficient purge air flow from the Plant Air System to the Solvent Drain Tank (TK-208), SHT (TK-202), DSS Coalescer (TK-201), Solvent Strip Feed Tank (TK-217), and contactor vent header to maintain the flammable vapor concentration in the vapor space below 25% of CLFL. The remainder of the vessels and tanks (with orifices and PVVS) are supplied sufficient purge air from the Plant Air System to the vapor spaces to maintain the flammable vapor concentration in the vapor spaces below 100% of CLFL. The PVVS (addressed in Subchapters 4.4.11 and 4.4.24) along with the tank orifices maintain the flammable vapor concentration in the vapor space below 25% of CLFL.

The SS control to continuously provide purge air flow is applied to the process vessels and equipment in the CPA that have the potential to reach flammable conditions (100% CLFL) within 10 days following a loss of all vessel ventilation or flammable gas control. For these vessels and equipment, the ADS is credited for post-NPH operation if the vessel is located within a Process Vessel Cell (excludes the CSSX Tank Cells).

Maintaining the flammable vapor concentrations in the vessels and equipment below the CLFL prevents the possibility of an explosion occurring in the vessel or equipment. The energy released by the explosion could result in potential failure of the vessel and prompt fatalities or life-threatening injury to facility workers. A vessel explosion could also cause significant

damage to either PC-3 vessels/piping containing high-actinide waste or to the secondary confinement structure that supports the high-actinide-containing PC-3 vessels. Accordingly, SS/PC-3 controls (i.e., the back-up air purge supply) have been applied to prevent the event within the Process Vessel Cells.

For the CSSX contactor vent header and vessels in the CSSX Tank Cells, the radiological consequences of a vessel explosion are not high enough to warrant SS controls for the co-located worker. The safety-related concern for explosions in these vessels and equipment is the potential for the explosion to damage the PVVS HEPA filters. If the PVVS HEPA filters are damaged concurrent with an aerosolization event occurring in a vessel, an unfiltered release through the PVVS exhaust ducting could occur. Because an NPH event is not an initiator of an in-vessel aerosolization event, the ADS is not required for post-NPH event mitigation in these vessels and equipment.

To ensure that the ADS purge air supply is maintained for a period of four days following a loss of the normal purge air supply from the Plant Air System, the ADS is provided with dedicated back-up air purge supply from air receivers. The Backup Air Receivers are sized to provide the maximum flow for all vessels connected plus any leakage for four days. This allows time to connect a connection point for a portable air compressor. All active and passive components that comprise the back-up ADS air supply are considered to be SS components. The back-up ADS purge air supply (including the connection point for a portable air compressor) is designed to PC-3 seismic requirements to ensure that the piping and components will remain functional after a seismic event. The evaluations of the ADS piping's ability to withstand PC-3 stresses are documented within the P-CLC-J-xxxxx series of project calculations.

The relief valves on the ADS Backup Air Receivers are credited as SS passive pressure boundary components. The relief valves are needed for ASME code compliance purposes, but their ability to provide over-pressure protection for the Backup Air Receivers is not required to be a credited SS safety function because of the multiple concurrent failures that would need to occur in order to overpressurize the Backup Air Receivers to the point of failure with the installed compressor (00-700-21943, *ADS Backup Receiver Tanks Pressure Safety Valves (PSV-7307, PSV-7309)*[17]).

The pressure regulators and flow-indicating control valves in the back-up ADS purge air supply are active components that must function in order for the ADS to accomplish its safety function. In addition, the check valve on the discharge of the pressure regulators from the normal purge air supply from the Plant Air System is an active component that must function in order to preserve the four day inventory in the Backup Air Receivers after the automatic swap-over from normal purge air supply to back-up purge air supply. The pressure regulators, flow-indicating control valves, and check valve are subject to a periodic surveillance/testing program to ensure their continued reliability. The components are designed and tested to meet the requirements for PC-3 seismic qualification.

The flow-indicating control valves are designed with integral flow regulators to maintain constant flow under varying upstream supply pressures. This was included in the design because there will be a decrease in the pressure of the ADS distribution header when the normal purge air

supply is lost and flow is initiated from the Backup Air Receivers. The flow-indicating control valves are of several different models, sized appropriately for the flow rate needed into the associated process vessel. Certain of the lower flow models have exhibited a tendency to decrease flow as supply pressure decreases. Additionally, one of the higher flow models has exhibited a tendency to increase flow as supply pressure decreases. The magnitude of the flow variations observed when switching from the normal purge air supply to the Backup Air Receivers is fairly small when the settings of the respective pressure regulators differ by 10 psi, but the flow variations are considerably larger for greater pressure differences. To restrict the potential flow variations due to the magnitude of header pressure changes, a maximum limit is placed on the normal purge air supply pressure via the TSRs. The TSRs also contain required actions to either restore header pressure to its original range or adjust flows to within limits following a switch from the normal purge air supply to the Backup Air Receivers.

To ensure that a four day supply of back-up purge air is available to meet the required safety function, sufficient compressed air is provided by the air receivers. The air receivers are mounted in a manner that meets the requirements for PC-3 seismic restraints and the pressure in the header downstream of the receivers is continuously monitored to ensure sufficient capacity. The air receivers are considered to be SS components. The dedicated air compressor used to pressurize the back-up air receivers is not considered to be a SS component.

The PC-3 seismic design of the Plant Air supply lines from the connection point for a portable air compressor is a passive design feature. The Plant Air piping is stainless steel pipe. The Structural Integrity Program addressed in the TSRs will ensure that the design features continue to fulfill their credited SS functions.

All piping in the back-up ADS purge air supply is a passive design feature. The piping is designed to meet the requirements of PC-3 seismic design. The Structural Integrity Program addressed in the TSRs ensures that the design features continue to fulfill their credited SS functions.

The pressure instruments with associated CR alarms that monitor the inventory of the back-up air receivers and the system pressures downstream both sets of pressure regulators are active components. The active portions of these instruments are SS/PC-1 because they are not needed to control the system following an NPH event. The pressure sensors provide a passive SS/PC-3 pressure boundary to maintain system inventory. The SS pressure instruments with associated CR alarms are detailed in Subchapter 4.4.23.

The ADS does not depend on electrical power to perform its safety functions. A LOP would eventually terminate flow to ADS from the Plant Air System following loss of the compressors, but the ADS realignment to the back-up air receivers is automatic and only requires appropriate response by the pressure regulators and check valve, neither of which are affected by the LOP.

Component level, system level, and process level design; performance, functional, and safety test requirements; and acceptance criteria; along with applicable tolerances are documented by

Engineering in the Attribute Verification Database (AVD) and referenced source documents. Performance attributes include identified SS testable features.

The initial testing program demonstrates that each active system performs as designed and the performance, functional, and safety design attributes are met. The documentation of the testing that verified the key attributes were satisfied as a part of the initial testing program is described in Subchapter 10.3.

#### 4.4.12.5 Controls (TSRs)

The SS credited back-up purge supply air receivers and ADS purge air supply lines to the vessels in the Process Cells for PC-3 seismic design are passive design feature and are designed for its operational life, considering the purge supply air quality. The design of the credited ADS purge air supply line inside the Process Cells considered the environment inside the Process Cell and the process vessel. The piping and air receivers do not require routine maintenance or surveillance to demonstrate operability. The Structural Integrity Program addressed in the TSRs will ensure that the design features will continue to fulfill their credited SS and PC-3 functions.

The SS and PC-3 credited back-up purge air supply pressure regulators, flow-indicating control valves, and check valve are active components for which reliability is ensured by the periodic testing/surveillance program addressed in the TSRs.

The requirements that Operators stop recirculating pumps for the Strip Effluent Pump Tank (TK-215), Solvent Strip Feed Tank (TK-217), Solvent Drain Tank (TK-208), and SHT (TK-202) within 2 hours of the loss of ventilation in their respective cells are implemented via the required actions of the LCO for the Process Building Ventilation System in the TSRs.

### 4.4.13 PBVS

#### 4.4.13.1 Safety Function

The PBVS ensures that non-negligible airborne releases from non-NPH events within the CPA are confined and filtered. These events include:

- An APA overblow event that could result in a positive pressure in the process vessel(s) and in the affected Process Cell(s). The PBVS cell inlet filters and ducting from the cell inlet HEPA filters into the Process Cells is credited with preventing an unfiltered release into the occupied areas of the CPA;
- PBVS sweeps areas away from occupied areas and filters the atmosphere to remove radioactive material. (ASP, Sample, and CSSX P&VGs, Drum-off/Decon Area, CSSX Contactor Operating Deck and Contactor Support Floor Area); and
- PBVS ventilates the atmosphere and removes radioactive material (ASP Process Vessel Cells, WTE, and East and West CSSX Tank Cells);

For these mitigating functions, the PBVS exhaust is classified as SS and PC-1 from the P&VGs to the cell inlet HEPA to the outlet penetration from the CPA. The PBVS also includes instrumentation to verify that the filtered pathway is operable, using appropriate air flow instruments, alarms, and monitoring that are functionally classified as SS.

A discussion of the credited PBVS instrumentation and alarms is provided in Subchapter 4.4.25.

The HA identified PBVS as EC-16 for event categories:

- Fire,
- Explosion, and
- Loss of Confinement.

The HA identified PBVS HEPA filters as EC-8 for event categories:

- Fire,
- Explosion, and
- Loss of Confinement.

PBVS is credited as an SS control for the following DBA events:

- (EC-8) Process Cell Fire,
- (EC-8) APA Aerosolization, and
- (EC-16) APA Aerosolization.

#### 4.4.13.2 System Description

Figure 4.6-3 provides a simplified diagram of the PBVS with nominal zones pressures shown along with the SS and PC boundaries. The PBVS utilizes a multi-zone ventilation system that provides confinement, by cascading pressure zones, of radiological contaminants. The PBVS provides filtration of exhaust air and maintains negative air pressures, as required, to ensure that the spread of contamination within the building is minimized. The zoned exhaust air is drawn from the most contaminated areas through ductwork, manual and automatic dampers, and HEPA filter banks by one of two 100%-capacity exhaust fans. One fan is normally in operation, with the second on standby. The fans discharge the filtered exhaust air through ductwork into the exhaust stack.

The cascaded air flow is balanced by a series of manual and automatic dampers and seals. The ductwork, dampers, and seals separate the Process Building into three zones of successively greater negative pressure. The zone with the greatest negative pressure with respect to atmosphere (Zone 1) is the zone of highest potential contamination.

The PBVS exhaust fans draw air from the building locations with the highest potential for airborne contamination (Zone 1). The resulting negative pressures within Zone 1 cause the transfer of air from Zone 2 into Zone 1 via HEPA filters and ductwork into the Zone 1 Process Cells. The PBVS exhaust fans maintain all Zone 1 areas at a negative pressure, relative to the Zone 2 areas. The PBVS also maintains Zone 2 areas in which non-negligible releases could occur at a negative pressure, with respect to the normally occupied Zone 3 areas and the environment.

The PBVS system is monitored by the following instrumentation:

- Instrumentation and alarms for air flow through each cell for each Process Vessel Cell and the East and West CSSX Tank Cells;
- dP instruments and alarms for each cell to ensure negative pressure inside the cell for each Process Vessel Cell and the East and West CSSX Tank Cells;
- Instrumentation and CR alarms to ensure that negative pressure is maintained in the CPA areas capable of non-negligible releases (i.e., ASP and CSSX P&VG, Drum-off/Decon Area, CSSX Contactor Operating Deck and Contactor Support Floor area);
- dP sensors and Hi alarms on the cell inlet HEPA filters and Process Building exhaust HEPA filters to alert Operators to HEPA pluggage (high dP).

These alarms are not recognized in Chapter 3. These alarms are classified as SS Alarms and are designated as control number SSC-2. A discussion of the credited PBVS instrumentation and alarms is provided in Subchapter 4.4.25.

#### 4.4.13.3 Functional Requirements

To ensure that the ventilation system performs its credited safety functions, the following functional requirements must be met:

- PBVS sweeps areas away from occupied areas (ASP, Sample, and CSSX P&VGs, Drum-off/Decon Area, CSSX Contactor Operating Deck and Contactor Support Floor Area and from the corridor into the P&VG labyrinth);
- PBVS filters releases through HEPA filters; and
- PBVS ventilates the Process Vessel Cells, WTE, and East and West CSSX Tank Cells and removes radioactive material from atmosphere.

#### 4.4.13.4 System Evaluation

To achieve its credited safety function, the PBVS exhaust fans draw air from the building locations with the highest potential for airborne contamination (Zone 1). The resulting negative pressures within Zone 1 cause the transfer of air from Zone 2 into Zone 1 via HEPA filters and ductwork into the Zone 1 Process Cells. The PBVS exhaust fans are credited with maintaining all Zone 1 areas at a negative pressure, with respect to the Zone 2 areas. The PBVS also maintains

Zone 2 areas in which non-negligible releases could occur (e.g., P&VGs) at a negative pressure, with respect to the atmosphere.

To ensure the ability of the PBVS to accomplish its credited functions, the cell inlet and Process Building exhaust HEPA filters must remove radioactive particulates from the cell inlet and building exhaust air flow and the filter housings must direct the air flow through the filters. The exhaust fans and motors must operate to draw flow through the system and the filters. The CPA ductwork from the P&VG to the cell inlet HEPA filter to the outlet penetration from the CPA, including other ventilation tie-ins (e.g., PVVS, Pulse Mixer Ventilation System [PMVS]) downstream of the PBVS fans up to the first backdraft dampers, must function to ensure that contaminated air is directed through the HEPAs and the necessary negative pressure is maintained in required areas. To ensure that the PBVS can reliably accomplish its safety functions, all of these portions of the system are designated as SS. Loss of the PBVS is evaluated in the LOP and other events. In addition, the credited active ventilation by the PBVS is for protection of the immediate worker. Therefore, an SS supply of standby power is not required for the PBVS fans.

The PBVS is not credited with performing mitigation functions following an NPH event. The preventive/mitigative controls that are credited for worker protection following NPH events includes PC-3 primary confinement for high hazard waste and PC-3 source of dilution air (where required). Because release of high-hazard material is effectively prevented by these controls, the ventilation confinement capability is not required to provide a filtered pathway during or after an NPH event. Therefore, the credited PBVS components are designed to PC-1 seismic requirements.

The process vessels and piping systems are designed to confine all high-hazard material; there is no pathway for this material to enter the Process Building air space unless a non-NPH initiated process upset condition were to occur (e.g., process vessel overflow, APA overblow, pressurized leak, spills in the P&VG, etc.), or if the PVVS fails coincident with a process event in a vessel. Under these conditions, the PBVS provides a credited passive confinement function for immediate worker protection.

The Process Building Exhaust HEPA filters are provided with a manual deluge system to supply a spray of water to the face of the first stage HEPA filter media. Because water leakage past a deluge valve could wet the HEPA filter media, weakening it over time and potentially causing material to wick through the filter, measures are necessary to prevent inadvertent wetting of the filter. To prevent inadvertent filter wetting, the design of the water supply manifold provides a means to have multiple valves closed to isolate flow, with an open drain between isolation valves to ensure that valve seat leakage or misalignment of a single valve does not result in water introduction into the HEPA filter.

Component level, system level, and process level design; performance, functional, and safety test requirements; and acceptance criteria; along with applicable tolerances are documented by Engineering in the AVD and referenced source documents. Performance attributes include identified SS testable features.

The initial testing program demonstrates that each active system performs as designed and the performance, functional, and safety design attributes are met. The documentation of the testing that verified the key attributes were satisfied as a part of the initial testing program is described in Subchapter 10.3.

The PBVS components are designed to the appropriate codes identified in P-DB-J-00004[8] and P-DB-J-00002[9] to ensure adequate reliability.

#### 4.4.13.5 Controls (TSRs)

The SS credited ventilation ducts are designed for the facility design life, considering the high-radiation environment and the corrosive and erosive nature of the process streams.

The ventilation ducts are a passive design feature and do not require routine maintenance or surveillance to demonstrate operability. The Structural Integrity Program addressed in the TSRs will ensure that the design feature will continue to fulfill its credited SS function.

The SS credited dampers and exhaust fans are active components for which reliability is ensured by the periodic testing/surveillance program addressed in the TSRs.

The SS credited HEPA filters are continuously monitored to ensure that adequate flow through the filters is available and that the HEPA filters are not plugged. The HEPA filters are also subject to the periodic testing/surveillance program addressed in the TSRs.

A TSR Administrative Control will require that the water supply to the HEPA filter spray systems be isolated by a double block and bleed alignment except in cases where there are indications of a filter fire. The position of the fire suppression valves associated with this alignment shall be administratively controlled.

### 4.4.14 Analytical Laboratory Ventilation System

#### 4.4.14.1 Safety Function

The Analytical Laboratory Ventilation System is credited for mitigating the effects of a leak, spill, or spray event as a result of a failure of radioactive waste containment in either the AFF Sample Gloveboxes (GB-008 and GB-009) or Hot Cells for the local on-site 1 worker. The Analytical Laboratory Ventilation System is credited to prevent an unfiltered release as a result of non-NPH sample system leakage events.

Because it is not credited for NPH-initiated releases, the Analytical Laboratory Ventilation System is categorized as PC-1.

The following components are required to provide a credited filtration capability: HVAC exhaust ducting, (Hot Cell) exhaust HEPA filter housing, and HEPA filters within the Analytical Laboratory Ventilation System. The integrity of the AFF sampler gloveboxes and the Hot Cells

is necessary to ensure that bulk air flow is directed to the HEPA filter when the ventilation system is running.

Interlocks are provided to stop sample pumps when dP is lost to the Sample Gloveboxes (GB-008 and GB-009) or Hot Cells. A discussion of the glovebox and Hot Cells, Analytical Laboratory Ventilation System HEPA Filter Instrumentation and alarm, and Analytical Laboratory Ventilation System Glovebox\Hot Cell Vacuum Interlock is provided in Subchapters 4.4.9, 4.4.20, and 4.4.27.

The HA identified Analytical Laboratory Ventilation System as EC-15 for event categories:

- Direct Exposure,
- Loss of Confinement,
- Fire, and
- Explosion.

The HA identified the Hot Cell exhaust HEPA in the Analytical Laboratory Ventilation System as a control for the event categories listed below. This item was elevated to SS in Chapter 3 (EC-19) because it provides significant DID.

- Fire,
- Explosion, and
- Direct Exposure.

Analytical Laboratory Ventilation System is not credited as an SS control for any of the DBA events.

#### 4.4.14.2 System Description

Figure 4.6-3 provides a simplified diagram of the Analytical Laboratory Ventilation System. The AFF Sample Gloveboxes (GB-008 and GB-009) are supplied with ventilation air through the normal HVAC system, which provides air to occupied areas of the facility, including the laboratory-occupied areas. The air enters these gloveboxes through inlet HEPA filter (FLT-025) passes through the gloveboxes and exits to a common header. The common header enters Hot Cell HC-004 and exits through Hot Cell HC-001. The exhaust header then separates into two treatment trains. Each train is composed of a scrubber (SCB-003, -004) a prefilter and a HEPA filter (FLT-021, -022). The scrubbers and filters are located in the Laboratory Hot Cell Exhaust Room against the west wall of the CPA. Exhaust air flow is provided by the Process Building exhaust fans.

For the Analytical Laboratory Ventilation System to perform its airborne confinement function when needed, the system interfaces with and is supported by three other SS SSCs. First, the Hot Cells and sampler gloveboxes (SS) provide secondary confinement around the samplers and sample piping. Second, the PBVS exhaust fans (SS) provide motive force for flow through the Hot Cell and Sampler Gloveboxes and maintain appropriate vacuum in those areas when necessary to support sampling activities. Third, the Hot Cell/Glovebox low vacuum interlocks (SS) ensure that sample pumps are stopped if inadequate vacuum is present in these locations to support sampling activities. All three of these interfacing and support systems have the same functional classification as the Analytical Laboratory Ventilation System.

The system is monitored by the following SS instrumentation:

- dP indication for Hot Cell, GB-008 and GB-009 vacuum with interlocks to the respective sample pumps.

A discussion of the credited Analytical Laboratory Ventilation System interlocks is provided in Subchapter 4.4.20.

The system is also monitored by the following instrumentation:

- dP indicators and Hi dP alarms on the exhaust HEPA filters to alert Operators to challenges to the HEPA on high dP.

These alarms are not recognized in Chapter 3. These Alarms are classified as SS Alarms and are designated as control number SSC-3. A discussion of this credited Hi dP alarm is provided in Subchapter 4.4.27.

The Analytical Laboratory Ventilation System has been designed to the appropriate codes identified in P-DB-J-00004[8] and P-DB-J-00002[9] to ensure adequate reliability in the system.

#### 4.4.14.3 Functional Requirements

To ensure that the ventilation ducts perform their credited safety functions, the following functional requirements must be met:

- Analytical Laboratory Ventilation System provides a filtered release path (Hot Cell HEPA Filter) for non-NPH sample system leakage events, and
- Analytical Laboratory Ventilation System also provides a slight negative pressure in the gloveboxes and Hot Cells to prevent the spread of contamination (protection of Onsite-1 worker).

#### 4.4.14.4 System Evaluation

To ensure the ability of the Analytical Laboratory Ventilation System to accomplish its credited functions, the Hot Cell exhaust HEPA filters must remove radioactive particulates from the exhaust air flow, and the filter housings must direct the air flow through the filters. The PBVS

exhaust fans and motors provide the vacuum required to pull air through the system and the filters. The PBVS is a SS system and is discussed in Subchapter 4.4.13.

The Analytical Laboratory Ventilation System is not credited with performing mitigation functions following an NPH event. The mitigative controls discussed above are credited for worker protection for certain operational events, but are not credited for a seismic event. Therefore, the credited Analytical Laboratory Ventilation System components are designed to PC-1 seismic requirements. The Analytical Laboratory Ventilation System and Hot Cell/ Glovebox Vacuum Interlock stop sample flow on loss of vacuum.

Because an unfiltered release cannot occur downstream of the Analytical Laboratory ventilation exhaust (Hot Cell) HEPA filters, the ductwork from the Analytical Laboratory Ventilation System, HEPA filters to the PBVS exhaust fan suction, including the indications and alarms to monitor exhaust flow, are not credited and are classified as General Service (GS).

The scrubber and demister are not credited with a safety function other than providing a pressure boundary to direct the flow of air to the HEPA filters. Failure of their normal operational function does not cause a significant release event.

Component level, system level, and process level design; performance, functional, and safety test requirements; and acceptance criteria; along with applicable tolerances are documented by Engineering in the AVD and referenced source documents. Performance attributes include identified SS testable features.

The initial testing program demonstrates that each active system performs as designed and the performance, functional, and safety design attributes are met. The documentation of the testing that verified the key attributes were satisfied as a part of the initial testing program is described in Subchapter 10.3.

The Analytical Laboratory Ventilation System components are designed to the appropriate codes identified in P-DB-J-00004[8] and P-DB-J-00002[9] to ensure adequate reliability.

#### 4.4.14.5 Controls (TSRs)

The SS credited ventilation ducts are designed for the facility design life, considering the high-radiation environment and the corrosive and erosive nature of the process streams. The ventilation ducts are a passive design feature and do not require routine maintenance or surveillance to demonstrate operability. The Structural Integrity Program addressed in the TSRs will ensure that the design feature will continue to fulfill its credited SS function.

The SS credited exhaust (Hot Cell) HEPA filters are continuously monitored to ensure that adequate flow is available through the filters. These HEPA filters are also subject to the periodic testing/surveillance program addressed in the TSRs.

### 4.4.15 WTE Vent Line

#### 4.4.15.1 Safety Function

The WTE vent line is credited as an SS control for the spill event in the WTE providing a path for a negative pressure in the WTE from the SSFT Cell, with respect to the Waste Transfer Access Room. This action reduces the spread of contamination following a leak or spill event in the WTE since the Waste Transfer Access Room has a door at the periphery of the CPA.

Chapter 3 upgraded the WTE vent line (EC-24) to SS because it was considered to provide significant DID. The HA identified that the WTE Vent Line provided DID for events in categories of Fire; but the control was not credited in the HA with an SS function of reducing frequency or consequences.

The WTE vent line is not credited as an SS control for any of the DBA events.

#### 4.4.15.2 System Description

The piping is a 3-inch vent line that is routed from the WTE high point to the adjacent (SSFT) cell. There are no moving parts (dampers or isolation valves) required to perform the intended safety function and the piping is passive in nature. The PBVS system addressed in Subchapter 4.4.13 maintains the SSFT Cell at a slight vacuum.

Although personnel entry into the WTE is not anticipated during the facility's operating lifetime, an access hatch into the WTE is provided for inspections and non-routine maintenance. The access hatch is closed by a shield plug that requires management authorization, Administrative Controls, and mechanical assistance for removal. By maintaining the WTE at a negative pressure with respect to the Waste Transfer Access Room, the potential to spread contamination is reduced.

#### 4.4.15.3 Functional Requirements

To ensure that the 3-inch stainless steel vent line performs its credited safety function, the following functional requirements must be met:

- The 3-inch-vent line provides a passive path from the SSFT Cell to maintain a dP sufficient to ensure any air leakage is from the Waste Transfer Access Room into the WTE.

#### 4.4.15.4 System Evaluation

Functionality is ensured through the implementation of applicable Surveillance Requirements (SRs) identified in the TSRs.

The piping is a 3-inch vent line that is routed from the WTE high point to the adjacent (SSFT) cell. There are no moving parts (dampers or isolation valves) required to perform the intended safety function and the piping is passive in nature.

The 3-inch-vent line will provide a negative dP between the WTE and the Waste Transfer Access Room, as long as it draws a vacuum from the SSFT Cell. The SSFT Cell is maintained at a slight vacuum by the PBVS system, which is addressed in Subchapter 4.4.13.

#### 4.4.15.5 Controls (TSRs)

The 3-inch WTE vent is designed for the facility design life, considering the high-radiation environment.

The 3-inch WTE vent is a passive design feature and does not require routine maintenance or surveillance to demonstrate operability. The Structural Integrity Program addressed in the TSRs will ensure that the design feature will continue to fulfill its credited SS function.

### 4.4.16 AFF Ventilation System

#### 4.4.16.1 Safety Function

The AFF Ventilation Exhaust System provides a filtered pathway for airborne radioactive material present within the AFF. The AFF exhaust fans create a negative pressure to draw potentially contaminated air in the AFF process vessel areas that may be released from the AFF process vessels into the AFF exhaust HEPA filter. The HEPA filter, fan housings, and interconnected ductwork serve to confine the airborne contamination within the filtration and exhaust trains to prevent an unfiltered release from the AFF.

A discussion of the credited AFF Ventilation System instrumentation and alarms is provided in Subchapter 4.4.28.

The HA identified AFF Ventilation System as EC-8 for event categories:

- Fire,
- Explosion, and
- Loss of Confinement.

The HA identified the AFF Ventilation System as a control for the event categories listed below. Chapter 3 upgraded the AFF Ventilation System (EC-23) to SS because it was considered to provide significant DID.

- Fire,
- Explosion, and
- Loss of Confinement.

The AFF Ventilation System is credited as an SS control (EC-8) for the following DBA events:

- AFF Vessel Explosion.

#### 4.4.16.2 System Description

The AFF Ventilation Exhaust System provides a filtered exhaust pathway for all air leaving the AFF. The AFF Ventilation System ensures that a negative pressure is maintained in the AFF, with respect to outside air. This ensures that all air from the AFF is exhausted through the filtered relief path and is not released directly to the outside.

The AFF Ventilation Exhaust System draws air from the AFF through a single HEPA filter system, using one of two 100%-capacity exhaust fans. The HEPA filter system consists of a pre-filter and two stages of HEPA filters. Each exhaust fan is capable of drawing AFF air through the HEPA filter. Normally, the HEPA filter and one fan are in operation, with the second fan on standby. The AFF Ventilation Exhaust System fans discharge to the plant stack.

The AFF system is monitored by the following instrumentation:

- dP alarm used by the Operator(s) to verify that negative pressure is maintained in the AFF process vessel area, and
- dP Hi alarms on the AFF exhaust HEPA filter to alert Operators to HEPA filter plugging (high dP).

These alarms are not derived as controls in Chapter 3. These Alarms were determined necessary to monitor the status of the SS ventilation system and are classified as SS Alarms and are designated as control number SSC-4. A discussion of the credited AFF Ventilation System instrumentation and alarms is provided in Subchapter 4.4.28.

Because the unmitigated consequences to a co-located worker from a spill or fire in the AFF caused by an NPH event are low, the AFF Ventilation Exhaust System is classified as PC-1 for NPH purposes.

#### 4.4.16.3 Functional Requirements

To ensure that the AFF ventilation system performs its credited safety functions, the following functional requirements must be met:

- AFF ventilation system ensures that areas having a higher potential for airborne contamination are maintained at a negative pressure, relative to atmosphere; and
- AFF ventilation ensures that all non-negligible airborne releases from non-NPH events are filtered prior to release.

#### 4.4.16.4 System Evaluation

To achieve its credited safety function, the AFF Ventilation Exhaust System exhaust fans draw air from the AFF. The resulting negative pressure in the AFF ensures that air flow is from the outside into the AFF.

To ensure the ability of the AFF Ventilation Exhaust System to accomplish its credited functions, the exhaust HEPA filter must remove particulate contamination from the exhaust air stream, and the filter housing must direct the air flow through the filter. The exhaust fans and motors must operate to draw flow through the system and the filters. The AFF ductwork from the exit of the AFF process vessel area to the backdraft damper downstream of the exhaust fan must function to ensure that the contaminated air is directed through the filters and that the necessary negative pressure is maintained in the AFF. To ensure that the AFF Ventilation Exhaust System can reliably accomplish its safety functions, these portions of the system are designated as SS.

Because the unmitigated dose to a co-located worker from a spill or fire in the AFF caused by an NPH event is low, the credited portions of the AFF Ventilation Exhaust System are classified as PC-1 for NPH purposes. Loss of the AFF Ventilation Exhaust System is evaluated in the LOP and other events. In addition, the credited active ventilation by the AFF Ventilation Exhaust System is for protection of the immediate worker. Therefore, electrical power is not required to be upgraded to an SS support system for the AFF Ventilation Exhaust System fans.

The AFF Exhaust HEPA filters are provided with a means to supply a spray of water to the face of the first stage HEPA filter media. This spray system meets the requirements of manual deluge spray system from DOE-STD-1066-99, *Fire Protection Design Criteria*[18]. Because water leakage past a deluge valve could wet the HEPA filter media, weakening it over time and potentially causing material to wick through the filter, measures are necessary to prevent inadvertent wetting of the filter. To prevent inadvertent filter wetting, the design of the water supply manifold provides a means to have multiple valves closed to isolate flow, with an open drain between isolation valves to ensure that valve seat leakage or misalignment of a single valve does not result in water introduction into the HEPA filter.

The HA and the accident analysis credit the AFF Ventilation System to mitigate the radiological consequences of vessel explosions in AFF. Subchapter 3.4.2.3 shows that although the AFF Ventilation System is not part of the first Level of Control for AFF vessel explosions, it is credited as an additional SS control to provide further reduction of the consequences of the event. There is a possibility that an AFF vessel explosion could cause the catastrophic failure of the vessel itself. Because of the relative locations of the AFF vessels and the ventilation system components this could conceivably cause a loss of the AFF exhaust fans or loss of the exhaust HEPA filter if vessel fragments struck those components. The risk of the degradation of the AFF Ventilation System caused by an AFF vessel explosion is judged to be small, and is considered acceptable because the AFF vessel ventilation system is not part of the credited first Level of Control for an AFF explosion event. The first Level of Control for the AFF explosion event is defined as the group of controls that taken together are the minimum set of controls that provide adequate protection of the health and safety of the offsite and onsite receptors from the postulated consequences of the identified DBA. Other preventive and mitigative SS controls provide additional assurance of protection of the health and safety of the offsite and onsite receptors beyond that provided by the first Level of Control alone and provide DID.

Component level, system level, and process level design; performance, functional, and safety test requirements; and acceptance criteria along; with applicable tolerances are documented by

Engineering in the AVD and referenced source documents. Performance attributes include identified SS testable features.

The initial testing program demonstrates that each active system performs as designed and the performance, functional, and safety design attributes are met. The documentation of the testing that verified the key attributes were satisfied as a part of the initial testing program is described in Subchapter 10.3.

The AFF Ventilation Exhaust System components are designed to the appropriate codes identified in P-DB-J-00004[8] and P-DB-J-00002[9].

#### 4.4.16.5 Controls (TSRs)

The SS credited ventilation ducts in the AFF Ventilation Exhaust System are designed for the facility design life, considering the radiological environment and the nature of the process streams. The ventilation is a passive design feature and does not require routine maintenance or surveillance to demonstrate operability. The Structural Integrity Program addressed in the TSRs will ensure that the design feature will continue to fulfill its credited SS function.

The SS credited dampers and exhaust fans are active components for which reliability is ensured by the periodic testing/surveillance program addressed in the TSRs.

The SS credited HEPA filter is continuously monitored to ensure that adequate flow through the filter is available. The HEPA filter is also subject to the periodic testing/surveillance program addressed in the TSRs.

A TSR Administrative Control will require that the water supply to the HEPA filter spray systems be isolated by a double block and bleed alignment except in cases where there are indications of a duct fire or filter fire. The position of the fire suppression valves associated with this alignment shall be administratively controlled.

### 4.4.17 Safety Instrumented System Logic Solver

#### 4.4.17.1 Safety Function

The Tricon Programmable Logic Controller (PLC) performs the input logic processing for both the Safety Instrumented Functions (SIFs) (SS Interlocks) and the identified SS CR alarms.

The Tricon PLC processes all of the SS interlock input parameters, logic, and outputs the safe state condition (de-energizes relays in power interruption circuits) to stop pumps associated with the SS interlocks when the respective monitored parameters exceed their setpoints. The following is a listing of the Interlocks and the associated Subchapters where details of the Interlock functions are provided.

| Interlocks | Associated Subchapter |
|---|---|
| Tank Temperature Interlocks | 4.4.18 |
| Recirculation Loop Temperature Interlock | 4.4.19 |
| Hot Cell/Glovebox Low Vacuum Interlocks | 4.4.20 |
| High-Turbidity Interlock | 4.4.21 |
| BDT gamma radiation monitor and interlock | 4.4.22 |

Additionally, the Tricon PLC processes all of the SS alarm input parameters, logic, and outputs the SS CR alarms when the monitored parameters exceed their respective setpoints. The following is a listing of the CR Alarms and the associated Subchapters where details of the CR Alarms functions are provided.

| Control Room Alarms | Associated Subchapter |
|---|---|
| ADS Low pressure alarms | 4.4.23 |
| PVVS Header Vacuum Low alarm | 4.4.24 |
| PBVS Instrumentation and Alarms | 4.4.25 |
| PVVS HEPA filters Hi dP Alarms | 4.4.26 |
| Analytical Laboratory Ventilation System (Hot Cell exhaust) HEPA Filter Hi dP Alarms | 4.4.27 |
| AFF Ventilation System Instrumentation and Alarms | 4.4.28 |

The Tricon PLC is a part of each individual instrument loop (Interlocks and Alarms) credited as SS controls described in this chapter. Because many of the SS interlocks are credited after the seismic event, the Tricon PLC is designed to satisfy PC-3 seismic requirements. The CR alarms are not PC-3.

The HA identified SIS Logic Solver as EC-11.a and b for event categories:

- Fire,
- Direct Exposure, and
- Loss of Confinement.

The HA identified SIS Logic Solver as EC-11.c for event categories:

- Explosion and
- Fire.

The SIS Logic Solver is credited for all events for which SS Interlocks and Alarms are credited.

#### 4.4.17.2 System Description

The Tricon PLC system is a fault-tolerant PLC that uses a triple modular redundant (TMR) architecture in which three parallel control paths are integrated into a single overall system. The

system is designed to use two-out-of-three voting with the intent of providing uninterrupted process operation with no single point of random hardware failure. The Tricon PLC is designed to satisfy PC-3 seismic requirements.

A Tricon PLC system consists of 1 main chassis and the primary remote expansion chassis in Instrument Control Panel (ICP)-16 with a secondary remote expansion chassis in each of the two remote input panels (ICP-02 and ICP-05). The main chassis contains: (1) two redundant power supply modules, (2) three main processor modules, and (3) two communications modules.

Figure 4.6-4 shows the data flow in the TMR architecture of the Tricon PLC system. When entering the input module, the signals from each attached sensor are separated into three isolated paths and sent to one of the three main processor modules. The TriBus inter-processor bus performs a two-out-of-three vote on data and corrects any discrepancies. This process ensures that each main processor uses the same voted data to execute its application program.

Similarly, process outputs are sent via triplicated paths to the output modules, which in turn send the data to a voter using two-out-of-three logic. The voted output is then sent to the actuation devices by an output termination board.

The Tricon PLC processes SS alarm inputs and alarm conditions outputs are routed directly to the CR alarm panel.

In addition to the SS alarm inputs, several non-SS instrument transmitter outputs are routed to the BPCS via the SIS. These non-SS instruments are the Process Vessel Cell and WTE sump level transmitters and the strip effluent Cs-137 concentration radiation instruments (CSSX Labyrinth #2). These non-SS inputs do not have the potential to adversely impact the credited safety functions of the SIS.

#### 4.4.17.3 Functional Requirements

To ensure that the Tricon PLC performs its credited safety function, the following functional requirements must be met:

- Tricon PLC is designed to satisfy PC-3 seismic requirements to ensure operability after a seismic event;
- SIFs (SS Interlocks): Processes the inputs for each Interlock input parameter and on detection of the parameter setpoint being exceeded and interlock logic met, the associated safety relays deenergized, and power interrupter devices activated to place the required components in their respective safe state (stop the pumps); and
- SS Alarms: Processes the inputs for each Alarm input parameter and on detection of the parameter setpoint being exceeded (alarm logic met), activating the respective CR alarm.

#### 4.4.17.4 System Evaluation

Functionality is ensured through the implementation of applicable SRs, as identified in the TSRs and the internal diagnostics described below.

The Tricon PLC is powered from Normal and Uninterruptible Power Supply (UPS) sources. The Safety Integrity Level (SIL) rating for the Tricon PLC is SIL 3 requirements and it is designed to conform to ANSI/International Society of Automation and Control (ANSI/ISA) 84.00.01-2004, *Functional Safety: Safety Instrumented Systems for the Process Industry Sector* (Parts 1-5)[19] for the SIS. Interface between the SIS and the BPCS is limited and isolated, such that a failure in the BPCS cannot cause a failure in the SIS. Interface between the SIS and the Highway Addressable Remote Transducer (HART) diagnostic device is limited to read only and isolated, such that a failure in the HART diagnostic device cannot cause a failure in the SIS. Tricon PLC is designed to satisfy PC-3 seismic requirements to ensure operability after a seismic event. The CR alarms and associated alarm panel is not designed to satisfy PC-3 seismic requirements.

The Tricon controller has been designed with self-diagnostics as a primary feature. TMR architecture (shown in Figure 4.6-4) ensures fault tolerance and provides error-free, uninterrupted control in the event of hard failures of components or transient faults from internal or external sources.

Each input/output module houses the circuitry for three independent channels. Each channel on the input modules reads the process data and passes that information to its respective main processor. The three main processor modules communicate with each other using a proprietary, high-speed bus system called the TriBus.

Extensive diagnostics on each channel, module, and functional circuit quickly detect and report operational faults by means of indicators or alarms. This fault information is available to an application. It is critical that an application properly manage fault information to avoid an unnecessary shutdown of a process or plant.

Each input or output point is considered to operate in one of three modes:

- TMR,
- Dual Mode, and
- Single Mode.

The current mode indicates the number of channels controlling a point; in other words, the number of channels controlling the output or having confidence in the input. For safety reasons, system mode is defined as the mode of the point controlled by the fewest number of channels.

While operating in TMR mode, during each scan the process is protected from the effect of a single safety-critical system fault. The system can also tolerate multiple faults and continue to operate correctly unless the combined effects of multiple faults affects the same point on multiple channels.

The TMR architecture is intended to allow continued system operation in the presence of any single point of failure within the system. The TMR architecture is also intended to allow the Tricon PLC to detect and correct individual faults online, without interruption of monitoring, control, and protection capabilities. In the presence of a fault, the Tricon PLC will alarm the condition, remove the affected portion of the faulted module from operation, and continue to function normally in a dual redundant mode. The system returns to the fully triple redundant mode of operation when the affected module is replaced.

To facilitate module replacement, the Tricon PLC chassis includes provisions for a spare module, logically paired with a single input or output module. This design allows on-line, hot replacement of any module, under power while the system is running, with no impact on the operation of the application.

If a system fault occurs, the loss of redundancy causes an increased probability-of-failure-on demand. To keep the probability-of-failure-on demand within industry-acceptable guidelines, the vendor documented the recommended maximum operating periods in EQIP-DCS-012, *Triconex Safety Considerations Guide*[20]:

| **Tricon PLC Operating Mode** | **SIL 1 Operating Time** | **SIL 2 Operating Time** | **SIL 3 Operating Time** |
|---|---|---|---|
| TMR Mode | Proof-Test Interval[a] | Proof-Test Interval | Proof-Test Interval |
| Dual Mode | Proof-Test Interval[b] | Proof-Test Interval[b] | Proof-Test Interval[b] |
| Single Mode | 72 hours[b] | 72 hours[b] | 72 hours[b, c] |

a. The Proof Testing for the Tricon PLC is performed via TSR Surveillances on the SIS Inputs and SIS outputs. The Tricon PLC Proof Test Interval is longer than the required frequency stated in the TSRs for applicable implementing surveillances.

b. Operating in dual mode significantly reduces the availability of the safety controller. The spurious trip rate can increase by a factor of 100 or more. Operating in single mode reduces the availability of the safety controller even further than operating in dual mode.

c. While in single mode, the SIL3 requirement for fault tolerance 1 is not satisfied. All interlocks are activated. ANN-001 ICP-16 Trouble Alarm is activated. The Tricon PLC continues to operate with one Main Processor.

The system is failsafe in that a loss of power will cause the safe state for the affected channel or the entire processing system. The required proof testing for the Tricon PLC system is performed with the individual instrument loop testing, end device testing, and with the certain parts of the SS Preventative Maintenance Program performed on the individual ICP cabinets. EQIP-DCS-013, *Failure Modes and Effects Analysis*[21] verifies that the Tricon PLC meets SIL 3 requirements. SIL verification calculations have been performed for all the interlock loops

performing SIFs. The key items from the SIL verification calculations and instrument uncertainty calculations that must be protected are summarized in 00-700-26801, *Conditions to Validate SS Instrument Calculations (SIL and Instrument Loop Uncertainty Calculations)*[22].

Component level, system level, and process level design; performance, functional, and safety test requirements; and acceptance criteria; along with applicable tolerances are documented by Engineering in the AVD and referenced source documents. Performance attributes include identified SS testable features.

The initial testing program demonstrates that each active system performs as designed and the performance, functional, and safety design attributes are met. The documentation of the testing that verified the key attributes were satisfied as a part of the initial testing program is described in Subchapter 10.3.

#### 4.4.17.5 Controls (TSRs)

The Tricon PLC system is necessary to ensure that the SS Interlocks and Alarms are activated when the monitored parameters exceed their respective setpoints and interlock logic met. Surveillances will be required to maintain the reliability of these SS SSCs. Test equipment used in the surveillances will be controlled by a Measuring and Test Equipment (M&TE) program addressed as an Administrative Control in the TSRs.

### 4.4.18 Tank Temperature Interlocks to Filter Recirculation Pumps

#### 4.4.18.1 Safety Function

The Tank Temperature Interlock operation ensures that if non-credited cooling is lost to the FFT-A (TK-102) or the SSRT (TK-104) while external recirculation pumps are left running (causing the process liquid to heat-up), the interlock would trip off the filter recirculation pumps upon exceeding the high temperature setpoint. If the filter recirculation pumps were to continue to operate and heat up the process liquid, it would decrease the time to CLFL. The interlocks are credited for operational and NPH events.

The HA identified Tank Temperature Interlocks as EC-11.c for event categories:

- Explosion and
- Fire.

Tank Temperature Interlocks are credited as an SS control (EC-11.c) for the following DBA events:

- ASP Vessel Explosion and
- Seismic.

#### 4.4.18.2 System Description

The process vessel temperature loop includes a quadruple thermocouple array installed in a thermowell with two thermocouples for each of the two temperature transmitters. The thermocouple junctions are located near the bottom of the vessel in the heel to ensure immersion in the fluid.

The temperature transmitters, SIS Logic Solvers, and power interrupting devices for the pump motors are all located within the PC-3 CPA structure. The thermocouples for the ASP vessels (i.e., FFT-A [TK-102] and SSRT [TK-104]) are designed to PC-3 requirements. The entire circuits are designed to PC-3 requirements.

All active and passive components that comprise the sensing and instrumentation circuit, interlock circuits, and power interrupting devices for the pump motors are considered SS components. The sensing and instrumentation circuit and interlock circuit design conforms to the applicable portions of ANSI/ANS 84.00.01-2004[19] for SIS. The instrument loops consist of dual thermocouples for each of the two temperature transmitters, and hardwired analog signal(s) to an SIS Logic Solver. The SIS Logic Solver hardwired output goes directly to the control devices separate from the BPCS Control circuits. The SIL rating for the SIS Logic Solver is SIL 3 to provide added confidence. The SIL rating of the overall loop is SIL 2.

Non-credited temperature indication and alarms for the process vessels and the filter loops are also available to the CR Operator through the BPCS.

#### 4.4.18.3 Functional Requirements

Functional requirements of the FFT-A (TK-102) and SSRT (TK-104) tank temperature interlocks are:

- On detection of a high temperature in the process vessel, the filter recirculation pumps are automatically stopped.

#### 4.4.18.4 System Evaluation

Functionality is ensured through the implementation of applicable SRs, as identified in the TSRs.

All active and passive components that comprise the sensing and instrumentation circuit, interlock circuits, and power interrupting devices for the pump motors are considered SS components. The instrument circuits and interlocks are designed to be fail-safe. A LOP would result in the credited interlock actions. To ensure reliability, the instrument loops are powered from dual power supplies from the SIS Logic Processor. Two power contactors in series are provided for assurance that the power is interrupted.

The SIL 3 capable SIS Logic Solver is detailed in Subchapter 4.4.17. The SIL rating for the overall loop is SIL 2. Per PP-NS-5501, *Functional Classification Methodology*[23], the SS instrument loops performing a SIF have a Target Average Probability of Failure on Demand for

SIL-2. Calculation J-CLC-J-00016, *SIL Verification Calculation for FFT-A Tank Temp Interlock to Filter Recirculation Pumps*[24], verifies that the Tank Temperature interlock meets SIL 2 requirements for the FFT-A (TK-102). Calculation J-CLC-J-00017, *SIL Verification Calculation for SSRT Tank Temp Interlock to Filter Recirculation Pump*[25], verifies that the Tank Temperature interlock meets SIL 2 requirements for the SSRT (TK-104). The instrument loops and interlocks are periodically tested.

All active and passive components associated with the Tank Temperature Interlock system are designed to satisfy PC-3 seismic requirements.

The Tank Temperature Interlock system is not required to be a redundant system. However, the two temperature detection loops are classified as SS, allowing either temperature detection loop to meet the required safety function with the other temperature detection loop out of service. Additionally, each of the temperature transmitters monitors two thermocouples for added reliability.

Component level, system level, and process level design; performance, functional, and safety test requirements; and acceptance criteria; along with applicable tolerances are documented by Engineering in the AVD and referenced source documents. Performance attributes include identified SS testable features.

The initial testing program demonstrates that each active system performs as designed and the performance, functional, and safety design attributes are met. The documentation of the testing that verified the key attributes were satisfied as a part of the initial testing program is described in Subchapter 10.3.

The instrument loops are periodically tested and are designed to appropriate codes identified in P-DB-J-00004[8] and P-DB-J-00002[9].

#### 4.4.18.5 Controls (TSRs)

The high temperature interlocks are necessary to ensure that the filter recirculation pumps are automatically stopped. Surveillances are required to maintain the reliability of these SS SSCs. Test equipment used in the surveillances are controlled by an M&TE program addressed in the TSRs as an Administrative Control.

### 4.4.19 Filter Feed Tank-B Recirculation Loop Temperature Interlocks

#### 4.4.19.1 Safety Function

The Recirculation Loop Temperature Interlock operation ensures that if non-credited cooling is lost to a Filter Feed Tank-B (FFT-B) Recirculation Loop while the loop recirculation pumps are left running (causing the process liquid to heat-up), the interlock will trip off the respective Loop filter recirculation pump upon exceeding the high temperature Setpoint. If the filter loop recirculation pump were to continue to operate and heat up the process liquid, it would decrease the time to CLFL. The interlocks are credited for operational and NPH events.

The HA identified Recirculation Loop Temperature Interlocks as EC-11.c for event categories:

- Explosion and
- Fire.

Recirculation Loop Temperature Interlocks are credited as an SS control (EC-11.c) for the following DBA events:

- AFF Vessel Explosion and
- Seismic.

#### 4.4.19.2 System Description

Each Recirculation Loop temperature loop includes a dual thermocouple array installed in a thermowell for each of the two temperature transmitters. The temperature transmitters, SIS Logic Solvers, and power interrupting devices for the pump motors are all located within the PC-3 CPA structure and are designed to PC-3 requirements. Because the AFF and FFT-B recirculation piping are designed to PC-1 requirements, the thermowells containing the thermocouples for the CFF Recirculation Loops are designed to PC-1 requirements.

All active and passive components that comprise the sensing and instrumentation circuit, interlock circuits, and power interrupting devices for the pump motors are considered SS components. The sensing and instrumentation circuit and interlock circuit design conforms to the applicable portions of ANSI/ANS 84.00.01-2004[19] for SIS. The instrument loops consist of dual thermocouples for each of the two temperature transmitters, and hardwired analog signal(s) to an SIS Logic Solver for each recirculation loop. The two pairs of thermocouple leads for the two temperature transmitters associated with a given recirculation loop are routed separately from the thermowells to the transmitters. The SIS Logic Solver hardwired output goes directly to the control devices separate from the BPCS Control circuits. The SIL rating for the SIS Logic Solver is SIL 3 to provide added confidence. The SIL rating of the overall loop is SIL 2.

Non-credited temperature indication and alarms for the process vessels and the filter loops are also available to the CR Operator through the BPCS.

#### 4.4.19.3 Functional Requirements

Functional requirements of the tank temperature interlocks are:

- On detection of a high temperature in a FFT-B filter recirculation loop, the respective filter recirculation pump is automatically stopped.

#### 4.4.19.4 System Evaluation

Functionality is ensured through the implementation of applicable SRs, as identified in the TSRs.

All active and passive components that comprise the sensing and instrumentation circuit, interlock circuits, and power interrupting devices for the pump motors are considered SS components. The instrument circuits and interlocks are designed to be fail-safe. A LOP would result in the credited interlock actions. To ensure reliability, the instrument loops are powered from dual power supplies from the SIS Logic Processor. Two power contactors in series are provided for assurance that the power is interrupted.

The SIL 3 capable SIS Logic Solver is detailed in Subchapter 4.4.17. The SIL rating for the overall loop is SIL 2. Per PP-NS-5501[23], the SS instrument loops performing a SIF have a Target Average Probability of Failure on Demand for SIL-2. Calculation J-CLC-J-00014, *SIL Verification Calculation for FFT-B Recirculation Loop High Temp Interlock*[26], verifies that the Recirculation Loop Temperature Interlocks meets SIL 2 requirements. The instrument loops and interlocks are periodically tested.

All active and passive components associated with the Recirculation Loop Temperature Interlock system are designed to satisfy PC-3 seismic requirements except for the thermowells in the FFT-B Recirculation Loops which are designed to satisfy PC-1 seismic requirements. The FFT-B Recirculation Loop pipes and the surrounding AFF building meet PC-1 seismic requirements. Each of the temperature transmitters on the Recirculation Loop monitors two thermocouples. The pair of thermocouple leads are routed in a protective conduit from the Recirculation Loop thermowell to the transmitter. Two conduit runs are provided in AFF, minimizing the distance that both pairs of thermocouple leads for a given recirculation loop share a common conduit within AFF. The transmitter automatically switches to the operational thermocouple upon detection of a bad signal. The interlock logic is 1 out of 2 transmitter inputs exceeding setpoint. If both transmitters are out of range (bad signal), the interlock would be activated and the respective pump power deenergized. The risk of a seismic event occurring and damaging all four (two per transmitter) of the thermocouples in a way that they do not respond to a subsequent increase in temperature (or failure not detected) without either damaging the FFT-B (TK-222) vessel, the filter loop piping, the operating filter recirculation pump, or causing a LOP to the pump motors is acceptably small.

Any single type of system damage listed above will be sufficient to prevent the scenario developing by either leaking the vessel contents to the sump where they will no longer be affected by the recirculation pumps or by stopping the recirculation pumps directly.

The sensors for the Recirculation Loop Temperature Interlock system require redundancy to minimize the risk of adverse seismic interactions within the AFF structure. Therefore, two temperature detection loops per recirculation loop are classified as SS, allowing continued operation with one temperature detection loop out of service for a specified time.

Component level, system level, and process level design; performance, functional, and safety test requirements; and acceptance criteria; along with applicable tolerances are documented by Engineering in the AVD and referenced source documents. Performance attributes include identified SS testable features.

The initial testing program demonstrates that each active system performs as designed and the performance, functional, and safety design attributes are met. The documentation of the testing that verified the key attributes were satisfied as a part of the initial testing program is described in Subchapter 10.3.

The instrument loops are periodically tested and are designed to appropriate codes identified in P-DB-J-00004[8] and P-DB-J-00002[9].

#### 4.4.19.5 Controls (TSRs)

The high temperature interlocks are necessary to ensure that the filter recirculation pumps are automatically stopped. Surveillances are required to maintain the reliability of these SS SSCs. Test equipment used in the surveillances is controlled by an M&TE program addressed in the TSRs as an Administrative Control.

### 4.4.20 Analytical Laboratory Ventilation System: Hot Cell/Glovebox Vacuum Interlock

#### 4.4.20.1 Safety Function

The Analytical Laboratory Ventilation System air flow mitigates the consequences of leaks and spills in the Laboratory Hot Cells and AFF Sample Gloveboxes 8 and 9 by filtering the air and directing contamination away from personnel. The Analytical Laboratory Ventilation System Hot Cell/Glovebox Low Vacuum Interlocks stop the respective sample pumps, which ensures that Analytical Laboratory Ventilation System air flow is available during sample operations.

The HA identified Analytical Laboratory Ventilation System Glovebox Vacuum Interlock as EC-11a for event categories:

- Fire.

The HA identified Analytical Laboratory Ventilation System Hot Cell Vacuum Interlock as EC-11.b for event categories:

- Direct Exposure,
- Loss of Confinement, and
- Fire.

The Analytical Laboratory Ventilation System Hot Cell/Glovebox Vacuum Interlocks are not credited as an SS control for any of the DBA events.

#### 4.4.20.2 System Description

The Analytical Laboratory Ventilation System is monitored by Analytical Laboratory Ventilation System vacuum sensors in the enclosures that contain process samplers. These sensors provide inputs to the SS (low-vacuum) interlocks to stop the sample pumps supplying flow to the

respective location. The interlock action to stop the sample pumps occurs by de-energizing the panel providing power to the pump motors, either PNL-215 for the hot cell sample pumps, or PNL-214 for the AFF sample pumps. When the SIS de-energizes the safety relay associated with a low vacuum interlock, an electrical contactor opens to de-energize the panel and separately a shunt trip coil opens the breaker feeding power to the panel. In addition to this SS interlock on sample pumps, a non-safety interlock occurs via the BPCS that stops flow to all the other process samplers in the hot cells or gloveboxes when vacuum in that location is lost.

All active and passive components that comprise the sensing and instrumentation circuit and interlock are considered SS components. The design conforms to the applicable portions of ANSI/ISA 84.00.01-2004[19] for SIS. The instrument loops consist of a transmitter and hardwired analog signal to the SIS Logic Solver. The SIS Logic Solver hardwired output goes directly to the control devices separate from the BPCS Control circuits. The SIL 3 capable SIS Logic Solver is detailed in Subchapter 4.4.17. The overall SIL rating for the loop is SIL 2.

All active and passive components associated with the Hot Cell/Glovebox Vacuum Interlock instrument loop and interlock are designed to satisfy PC-1 seismic requirements.

#### 4.4.20.3 Functional Requirements

To ensure that the Hot Cell/Glovebox Low Vacuum Interlock performs its credited safety function, the following functional requirements must be met:

- On detection of Hot Cell low vacuum, power to the respective sample pumps is interrupted.
- On detection of Glovebox 8 low vacuum, power to the respective sample pumps is interrupted.
- On detection of Glovebox 9 low vacuum, power to the respective sample pumps is interrupted.

#### 4.4.20.4 System Evaluation

Functionality is ensured through the implementation of applicable SRs identified in the TSRs.

All active and passive components that comprise the sensing and instrumentation circuit, interlock circuits, and power interrupting devices are considered SS components and are designed to be fail-safe. A LOP would result in shutdown of the respective sample pump operation. To ensure reliability, the instrument loops are powered from dual power supplies from the SIS Logic Processor.

The SIL 3 capable SIS Logic Solver is evaluated in Subchapter 4.4.17. The SIL rating for the overall loop is SIL 2. Per PP-NS-5501[23], the SS instrument loops performing an SIF have a Target Average Probability of Failure on Demand for SIL-2. Calculation J-CLC-J-00010, *Hot Cell Low Vacuum Interlock SIL Verification Calculation*[27], verifies that the Hot Cell Vacuum Interlock meets SIL 2 requirements. Calculation J-CLC-J-00011, *Glovebox 8 and Glovebox 9*

*Low Vacuum Interlock SIL Verification Calculation*[28], verifies that the Glovebox Vacuum Interlocks meets SIL 2 requirements Instrument loops and interlocks are periodically tested.

All active and passive components associated with the Hot Cell/Glovebox Vacuum Interlock instrument loops and interlocks are designed to satisfy PC-1 seismic requirements.

No redundancy is required in design of the sensor(s), sensing circuit, power supply, or relay components. The instrument and relay circuits are designed to be fail-safe. A LOP would result in de-energizing the respective sample pumps.

A power contactor opens to de-energize the panel and separately a shunt trip coil opens the breaker feeding power to the panel to provide assurance that the power panel is deenergized.

Component level, system level, and process level design; performance, functional, and safety test requirements; and acceptance criteria; along with applicable tolerances are documented by Engineering in the AVD and referenced source documents. Performance attributes include identified SS testable features.

The initial testing program demonstrates that each active system performs as designed and the performance, functional, and safety design attributes are met. The documentation of the testing that verified the key attributes were satisfied as a part of the initial testing program is described in Subchapter 10.3.

The circuits are designed to the appropriate codes identified in P-DB-J-00004[8] and P-DB-J-00002[9].

#### 4.4.20.5 Controls (TSRs)

The Analytical Laboratory Ventilation System air flow mitigates the consequences of leaks and spills in the Laboratory Hot Cells and gloveboxes by filtering the air and directing contamination away from personnel. The Analytical Laboratory Ventilation System Hot Cell/Glovebox Low Vacuum Interlock is interlocked to stop the sample pumps, which ensures that the Analytical Laboratory Ventilation System air flow is available during sample operations. Surveillances are required to maintain the reliability of these SS SSCs. Test equipment used in the surveillances are controlled by an M&TE program that is addressed in the TSRs as an Administrative Control.

### 4.4.21 High-turbidity Interlock

#### 4.4.21.1 Safety Function

CFF failures (breakthrough) would allow unintended particulate material containing actinides and strontium (Sr) to enter the CSSX process. The in-line turbidity instrumentation on the salt solution feed pumps common discharge line protects the source terms associated with postulated events downstream (CSSX process and AFF). The High Turbidity interlock protects the inventory initial condition.

The High-Turbidity Interlock is credited as an SS control (IC-11) for the following DBA events:

- AFF Vessel Explosion, and
- Seismic.

#### 4.4.21.2 System Description

The turbidity detectors are in-line detectors which detect particulate material as increased turbidity. MST or Tank Farm sludge particles in the filtrate indicate filter breakthrough or failure. The salt solution feed pumps common discharge line is equipped with two in-line turbidity instruments to detect particulate material containing actinides and $^{90}$Sr in the filtrate. On detection of an abnormally high concentration of particulate material, a safety-related interlock is actuated to stop the salt solution feed pumps to prevent the transfer of particulate material containing actinides and $^{90}$Sr to the CSSX process and the AFF.

All active and passive components that comprise the sensing and instrumentation circuit, interlock circuits, and power interrupting devices for the pump motors are considered SS components. The sensing and instrumentation circuit and interlock circuit design conforms to the applicable portions of ANSI/ISA 84.00.01-2004[19] for SIS. The instrument loops consist of a transmitter hardwired analog signals to the SIS Logic Solver. The SIS Logic Solver hardwired output goes directly to the control devices separate from the BPCS Control circuits. The SIL 3 capable SIS Logic Solver is detailed in Subchapter 4.4.17. The interlock ensures an IC is met which requires a SIL rating for the overall loop of SIL 1.

All active and passive components associated with the turbidity detection, interlock system, and power interrupting devices are designed to satisfy PC-3 seismic requirements. The interlock is fail-safe upon LOP.

#### 4.4.21.3 Functional Requirements

To ensure that the high-turbidity interlock performs its credited safety function, the following functional requirements must be met:

- On detection of a high concentration of particulate material (high turbidity) in the salt solution feed pumps discharge line, the salt solution feed pumps are automatically stopped.

#### 4.4.21.4 System Evaluation

The solids downstream of the turbidity monitors are assumed to be minimized for the safety analysis Radioisotope inventory (IC). A high concentration of MST or Tank Farm sludge particles in the filtrate indicates filter breakthrough or failure which would be collected in the SSFT (TK-109). The common discharge line of the SSFT (TK-109) is equipped with two in-line turbidity instruments to detect particulate material containing actinides and $^{90}$Sr in the clarified salt solution (CSS). On detection of abnormally high particulate material by a turbidity monitor, a safety-related interlock is actuated to stop the salt solution feed pumps.

All active and passive components that comprise the sensing and instrumentation circuit, interlock circuits, and power interrupting devices for the pump motors are considered SS components. The instrument circuits and interlocks are designed to be fail-safe. A LOP would result in the credited interlock actions. Two power contactors in series are provided for assurance that the power is interrupted. The Turbidity monitors are not powered by these 24 Volts Direct Current (VDC) power supplies from the SIS logic processors. The Turbidity monitors are powered by local 120 Volts (V) Alternating Current (AC) from the UPS. A LOP to the Turbidity monitor would result in the loss of signal which would be an Out of Range signal and the interlock logic would then be one out of one logic using the other good detector output. Both Turbidity monitors losing power results in activation of the interlock stopping the pumps. A LOP to the SIS would result in automatically stopping the pumps. Two power contactors in series are provided for assurance that the power is interrupted.

The SIL 3 capable SIS Logic Solver is evaluated in Subchapter 4.4.17. The SIL rating for the overall loop is SIL 1. Per PP-NS-5501[23], the SS instrument loops performing a SIF that are solely credited for ICs have a Target Average Probability of Failure on Demand for SIL-1. The SIL 1 rating is considered adequate for SS instrument loops that ensure ICs are met. The failure to meet the assumed inventory requirements does not in itself cause an event. Additional failures (event initiators as well as those required for event sequence progression) must take place for an event to have significant consequences. Calculation J-CLC-J-00013, *High-Turbidity Interlock SIL Verification Calculation*[29], verifies that the High-turbidity Interlock meets SIL 1 requirements.

In this case, the CFF sintered metal tubes are a SS credited barrier for the solids (containing actinides and $^{90}$Sr) in waste passing on to the SSFT (TK-109) and downstream processes (Subchapter 4.4.1). The CFF sintered metal tubes are the passive credited barrier to prevent the transfer of particulate material containing actinides and $^{90}$Sr to the CSSX process and the AFF.

The turbidity detection and interlock system is a redundant detector system. A continuous Channel check is performed comparing the redundant detector system outputs within the SIS Logic Solver which provides a CR alarm as a part of the detection system diagnostics. This provides notification so that the deviation between the two channels can be evaluated.

Continuous Operation with only one of the in-line turbidity instruments is limited and is addressed in the TSRs. The instrument loops and interlocks are periodically tested.

Component level, system level, and process level design; performance, functional, and safety test requirements; and acceptance criteria; along with applicable tolerances are documented by Engineering in the AVD and referenced source documents. Performance attributes include identified SS testable features.

The initial testing program demonstrates that each active system performs as designed and the performance, functional, and safety design attributes are met. The documentation of the testing that verified the key attributes were satisfied as a part of the initial testing program is described in Subchapter 10.3.

The instrument loop, interlocks, and power interrupting devices are designed to appropriate codes identified in P-DB-J-00004[8] and P-DB-J-00002[9].

#### 4.4.21.5 Controls (TSRs)

The high-turbidity monitor and interlock are necessary to ensure that the CSS flow to the CSSX contactors is stopped upon exceeding the high turbidity setpoint. Surveillances will be required to maintain the reliability of these SS SSCs. Test equipment used in the surveillances is controlled by an M&TE program addressed in the TSRs as an Administrative Control.

### 4.4.22 Barium-137 Decay Tank Gamma Detector and Interlock

#### 4.4.22.1 Safety Function

The AFF inventory is assumed to be a $^{137}$Cs-depleted waste stream. The gamma detector downstream of the BDT (TK-206) and interlock ensures that only a $^{137}$Cs-depleted waste stream enters the AFF. The gamma radiation monitors downstream of the BDT (TK-206) ensures that only a $^{137}$Cs-depleted waste stream enters the AFF. The BDT gamma radiation monitor and interlock system protects the inventory initial condition.

The HA identified BDT gamma radiation monitor and interlock system as a control for the event categories listed below. Subchapter 3.4 determined that the BDT gamma radiation monitor and interlock was needed as an SS control and elevated the SSC to SS (IC-10).

- Loss of Confinement.

The BDT gamma radiation monitor and interlock system is credited as an SS control (IC-10) for the following DBA events:

- AFF Vessel Explosion and
- Seismic.

#### 4.4.22.2 System Description

Two on-line gamma radiation monitors are installed downstream of each BDT pump. On detection of high gamma radiation, a safety-related interlock trips the salt solution feed pumps to the CSSX process and respective BDT pump.

All active and passive components that comprise the sensing and instrumentation, SIS Logic Solver, interlock circuits, and power interrupting devices for the pump motors are considered SS components. The sensing and instrumentation circuit and interlock circuit design conforms to the applicable portions of ANSI/ISA 84.00.01-2004[19] for SIS. Each instrument loop consists of detector, a Ratemeter and hardwired analog signal to the SIS Logic Solver. The SIS Logic Solver hardwired output goes directly to the control devices separate from the BPCS Control circuits.

The SIL 3 capable SIS Logic Solver is detailed in Subchapter 4.4.17. The interlock ensures an IC is met which requires a SIL rating for the overall loop of SIL 1.

All active and passive components associated with the high BDT gamma radiation monitor, interlock system, and power interrupting devices are designed to satisfy PC-3 seismic requirements. The interlock is fail-safe upon LOP.

#### 4.4.22.3 Functional Requirements

To ensure that the BDT gamma radiation monitor and interlock performs its credited safety function, the following functional requirements must be met:

- On detection of high gamma radiation in the DSS stream, the CSS flow to the contactors (salt solution feed pumps) and the DSS flow to the AFF (respective BDT pump) are automatically stopped.

#### 4.4.22.4 System Evaluation

All active and passive components that comprise the sensing and instrumentation circuit, interlock circuits, and power interrupting devices for the pump motors are considered SS components. The instrument circuits and interlocks are designed to be fail-safe. The Radiation monitors are not powered by these 24 VDC power supplies from the SIS logic processors. The Radiation monitor Ratemeters are powered by local 120V AC from the UPS. A LOP to the Ratemeter loop would result in the loss of signal which would be an Out of Range signal and the interlock logic would then be one out of one logic using the other good detector output. Both ratemeters losing power result in activation of the interlock stopping the pumps. A LOP to the SIS would result in automatically stopping the pumps. Two power contactors in series are provided for assurance that the power is interrupted.

The SIL 3 capable SIS Logic Solver is evaluated in Subchapter 4.4.17. The SIL rating for the overall loop is SIL 1. Per PP-NS-5501[23], the Safety-significant instrument loops performing a SIF that are solely credited for ICs have a Target Average Probability of Failure on Demand for SIL-1. The SIL 1 rating is considered adequate for SS instrument loops that ensure ICs are met. The failure to meet the assumed inventory requirement does not in itself cause an event. Additional failures (event initiators as well as those required for event sequence progression) must take place for an event to have significant consequences. Calculation J-CLC-J-00018, *BDT High Gamma Interlock SIL Verification Calculation*[30], verifies that the BDT gamma radiation monitor and interlock meets SIL 1 requirements

All active and passive components associated with the BDT gamma radiation monitor, interlock system, and power interrupting devices are designed to satisfy PC-3 seismic requirements. The interlock is fail-safe upon LOP.

The BDT gamma radiation monitor is not required to be designed with redundant components. However, two detection systems are classified as SS, allowing continued operation with one detector out of service. The instrument loops and interlocks are periodically tested.

Component level, system level, and process level design; performance, functional, and safety test requirements; and acceptance criteria; along with applicable tolerances are documented by Engineering in the AVD and referenced source documents. Performance attributes include identified SS testable features.

The initial testing program demonstrates that each active system performs as designed and the performance, functional, and safety design attributes are met. The documentation of the testing that verified the key attributes were satisfied as a part of the initial testing program is described in Subchapter 10.3.

The BDT gamma radiation monitor and interlock are designed to appropriate codes identified in P-DB-J-00004[8] and P-DB-J-00002[9].

#### 4.4.22.5 Controls (TSRs)

The BDT gamma radiation monitor and interlock system is necessary to ensure that DSS flow function is to trip the associated BDT transfer pump and the salt solution feed pumps. Surveillances are required to maintain the reliability of these SS SSCs. Test equipment used in the surveillances is controlled by an M&TE program addressed in the TSRs as an Administrative Control.

### 4.4.23 ADS Low Pressure Alarms

#### 4.4.23.1 Safety Function

Chapter 3.0 credits the ADS with maintaining an air purge to select vessels at a rate sufficient to maintain the vessel vapor spaces below flammable conditions. See Subchapter 4.4.12 for ADS specific requirements. The back-up air receivers for the ADS are sized to supply the required flow to the system loads for at least four days after an event that causes a loss of the normal air supply to the ADS. The ADS automatically switches to the credited back-up supply upon loss of the non-credited normal Plant Air supply.

Pressure instruments with associated CR alarms are provided to monitor the Back-up Air Receivers Pressure, Low Pressure Backup Purge Air Header Pressure (downstream of pressure regulators) and Normal Purge Air Header Pressure (downstream of pressure regulators) to alert CR Operators of a degraded ADS. (See Figure 4.6-2 for a simplified diagram of the ADS.)

Specifically, the Alarms are credited with the following:

- Back-up Air Receivers Pressure: Alert CR Operator to inadequate inventory of pressurized air (Four Day Supply).
- Normal Purge Air Header Pressure (downstream of pressure regulators): Alert CR Operator to inadequate flow to maintain Solvent Drain Tank (TK-208) less than 25% of CLFL (IC).
- Low Pressure Backup Purge Air Header Pressure (downstream of pressure regulators): Specifically to Alert CR Operator to inadequate flow to maintain Solvent Strip Feed Tank

(TK-217), DSS Coalescer (TK-201), SHT (TK-202) and Contactor Vent Header are less than 25% of CLFL (IC).

The pressure instruments with associated CR alarms are active components. The active portions of these instruments are SS/PC-1 because they are not credited following an NPH event. The pressure sensors provide a passive SS/PC-3 pressure boundary to maintain system inventory.

The ADS Low pressure CR alarms are credited as an SS control (IC-13) for the following DBAs:

- (Seismic, ASP Vessel Explosion) Back-up Air Receivers Pressure,
- (Seismic) Normal Purge Air Header Pressure (flow to Solvent Drain Tank [TK-208]), and
- (Seismic) Low Pressure Backup Purge Air Header Pressure (flow to CSSX components).

#### 4.4.23.2 System Description

The ADS Back-up Air Receivers Pressure is monitored by a Pressure sensor. This sensor provides the SS CR High Pressure Purge Air Pressure Low alarm. The ADS Low Pressure Back-up Air Header Pressure is monitored by a Pressure sensor. This sensor provides the SS LP Purge Air Pressure Low CR alarm. The Normal Purge Air Header Pressure is monitored by a Pressure sensor. This sensor provides the SS Plant Air Pressure to Tank Purge Low CR alarm.

All active and passive components that comprise the sensing and instrumentation circuit CR alarm are considered SS components and designed to satisfy PC-1 seismic requirements. The instrument loops consists of a transmitter and hardwired analog signal(s) to the SIS Logic Solver. The SIS Logic Solver alarm output is routed directly to the CR alarm panel. The SIL rating for the SIS Logic Solver is SIL 3 to provide added confidence the alarm conditions will be highlighted to the CR Operator. The SIL 3 capable SIS Logic Solver is detailed in Subchapter 4.4.17.

#### 4.4.23.3 Functional Requirements

The pressure instruments with associated CR alarms that monitor the inventory of the back-up air receivers and the system pressures downstream both sets of pressure regulators are active components. The active portions of these instruments are SS/PC-1 because they are not needed to control the system following an NPH event. The pressure sensors provide a passive SS/PC-3 pressure boundary to maintain system inventory.

To ensure that the “HP Purge Air Pressure Low” CR alarm performs its credited safety function, the following functional requirement must be met:

- On detection of low Pressure on the High Pressure Backup Air Header, an alarm is annunciated in the CR.

To ensure that the “LP Purge Air Pressure Low” CR alarm performs its credited safety function, the following functional requirement must be met:

- On detection of low Pressure on the Low Pressure Backup Air Header, an alarm is annunciated in the CR.

To ensure that the "Plant Air Pressure to Tank Purge Low" CR alarm performs its credited safety function, the following functional requirement must be met:

- On detection of low Pressure on the Normal Plant Air Header to Air Purge, an alarm is annunciated in the CR.

#### 4.4.23.4 System Evaluation

Functionality is ensured through the implementation of applicable SRs, as identified in the TSRs.

All active and passive components that comprise the sensing and instrumentation circuit and the CR alarm circuit are considered SS components. To ensure reliability, the instrument loops are powered from dual power supplies from the SIS Logic Processor. A LOP to the transmitter loop would result in the CR alarm. A complete LOP would be evident to the CR Operator.

The SIL 3 capable SIS Logic Solver is evaluated in Subchapter 4.4.17. The instrument loop and alarm are periodically tested.

There is no redundancy requirement in design of the CR alarms because they perform monitoring functions. The alarms verify ICs for flammable vapor control.

Component level, system level, and process level design; performance, functional, and safety test requirements; and acceptance criteria; along with applicable tolerances are documented by Engineering in the AVD and referenced source documents. Performance attributes include identified SS testable features.

The initial testing program demonstrates that each active system performs as designed and the performance, functional, and safety design attributes are met. The documentation of the testing that verified the key attributes were satisfied as a part of the initial testing program is described in Subchapter 10.3.

The circuits are designed to the appropriate codes identified in P-DB-J-00004[8] and P-DB-J-00002[9].

#### 4.4.23.5 Controls (TSRs)

The SS and PC-1 low-pressure alarms monitoring the air receivers and the headers downstream of both sets of pressure regulators are active components for which reliability is ensured by the periodic testing/surveillance program addressed in the TSRs.

The ADS Low pressure CR alarm circuits are necessary to ensure that the assumed ICs for flammable vapor control are met. Surveillances will be required to maintain the reliability of

these SS SSCs. Test equipment used in the surveillances is controlled by an M&TE program addressed in the TSRs as an Administrative Control.

### 4.4.24 PVVS Low-Vacuum Alarm

#### 4.4.24.1 Safety Function

Chapter 3.0 credits PVVS flow as an IC to ensure less than 25% CLFL concentration in process vessels as a preventer for Explosion Events. The PVVS system maintains a negative pressure on process vessels which provides for flow through the Process Vessel orifice into the process vessel vapor space. The "PVVS Header Vacuum Low" CR alarm monitors this SS parameter of the PVVS. The PVVS system is detailed in Subchapter 4.4.11.

The "PVVS Header Vacuum Low" CR alarm is credited as an SS control (IC-12) for the following DBA:

- ASP Vessel Explosions and
- Seismic.

#### 4.4.24.2 System Description

The PVVS air flow is monitored by a PVVS header dP sensor. This sensor provides the SS CR low-vacuum (low-flow) alarm.

All active and passive components that comprise the sensing and instrumentation circuit CR alarm are considered SS components and designed to satisfy PC-1 seismic requirements. The instrument loops consists of a transmitter and hardwired analog signal(s) to the SIS Logic Solver. The SIS Logic Solver alarm output is routed directly to the CR alarm panel. The SIL rating for the SIS Logic Solver is SIL 3 to provide added confidence the alarm conditions will be highlighted to the CR Operator. The SIL 3 capable SIS Logic Solver is detailed in Subchapter 4.4.17.

The PVVS header dP sensor monitors the system at a point just downstream of where the three individual PVVS subheaders join together in the PVVS/PMVS and Laboratory Vent Room on elevation 139'. The three PVVS subheaders are sized so that head losses along the subheaders are minimal during normal operation. It is possible for a process upset or misoperation to result in abnormal flows in the PVVS (e.g., emptying a process vessel cell sump to the point a vessel overflow line is uncovered, commanding fully open the air in-bleed valve for the PVVS header from the FFT-A Cell). For any case within the flow capacity of the PVVS fan, the vessel orifices are sized such that sufficient flow will exist from the cell into the tank even if the header vacuum drops slightly below the low vacuum alarm setpoint (see M-CLC-J-00134, *Process Vessel Ventilation System Sizing Calculation*[31]). For any case that exceeds the flow capacity of the PVVS fan, the PVVS fan will not be able to maintain header vacuum above its alarm setpoint, and the PVVS low vacuum alarm will alert the operators to the fact that some or all vessels do not have sufficient vacuum to cause enough flow through their inlet orifice to maintain the tank headspace below 25% of CLFL. For the case of an uncovered vessel overflow line in a Process

Vessel Cell sump, there would be additional non-SS alarms to indicate the abnormal condition (e.g., sump low level, low vessel-to-cell dP).

#### 4.4.24.3 Functional Requirements

To ensure that the "PVVS Header Vacuum Low" CR alarm performs its credited safety function, the following functional requirements must be met:

- On detection of low PVVS vacuum (flow), an alarm is annunciated in the CR.

#### 4.4.24.4 System Evaluation

Functionality is ensured through the implementation of applicable SRs, as identified in the TSRs.

All active and passive components that comprise the sensing and instrumentation circuit and the CR alarm circuit are considered SS components. The SIL 3 capable SIS Logic Solver is evaluated in Subchapter 4.4.17. The instrument loop and alarm are periodically tested.

There is no redundancy requirement in design of the CR alarm. The alarm verifies ICs for flammable vapor control. To ensure reliability, the instrument loops are powered from dual power supplies from the SIS Logic Processor. A LOP to the transmitter loop would result in the CR alarm. A complete LOP would be evident to the CR Operator.

Component level, system level, and process level design; performance, functional, and safety test requirements; and acceptance criteria; along with applicable tolerances are documented by Engineering in the AVD and referenced source documents. Performance attributes include identified SS testable features.

The initial testing program demonstrates that each active system performs as designed and the performance, functional, and safety design attributes are met. The documentation of the testing that verified the key attributes were satisfied as a part of the initial testing program is described in Subchapter 10.3.

The circuits are designed to the appropriate codes identified in P-DB-J-00004[8] and P-DB-J-00002[9].

#### 4.4.24.5 Controls (TSRs)

The PVVS Header Vacuum Low (flow) CR alarm circuit is necessary to ensure that the assumed IC for flammable vapor control is met. Surveillances will be required to maintain the reliability of these SS SSCs. Test equipment used in the surveillances is controlled by an M&TE program addressed in the TSRs as an Administrative Control.

### 4.4.25 PBVS Instrumentation and Alarms

#### 4.4.25.1 Safety Function

The PBVS operation ensures that non-negligible airborne releases from the CPA are confined and filtered for all non-NPH events. See Subchapter 4.4.13 for detailed discussion of the PBVS SS controls safety functions. The following instrumentation and alarms, which monitor PBVS operation, are credited as SS controls:

- Cell low-flow CR alarm: Instrumentation and alarms for air flow through each cell for each Process Vessel Cell and the East and West CSSX Tank Cells;
- Cell Negative Pressure CR alarm: dP instruments and alarms for each cell to ensure negative pressure inside the cell for each Process Vessel Cell and the East and West CSSX Tank Cells;
- Instrumentation and CR alarms to ensure that negative pressure is maintained in the CPA areas capable of non-negligible releases (i.e., ASP and CSSX P&VG, CSSX Contactor Operating Deck and Contactor Support Floor area);
- P&VG Negative Pressure CR alarm: dP instruments for the P&VGs to ensure negative pressure, with respect to atmosphere; and
- HEPA filters Hi dP CR alarm: dP sensors and Hi alarms on the cell inlet HEPA filters and Process Building exhaust HEPA filters to alert Operators to HEPA pluggage (high dP).

The PBVS Instrumentation and Alarms is credited as an SS control for the following:

- No direct Chapter 3.0 reference. Supports PBVS (Subchapter 4.4.13) and is designated as SSC-2.

#### 4.4.25.2 System Description

All active and passive components that comprise the sensing and instrumentation circuits and CR alarm circuits are considered SS components. The instrument loops consist of a transmitter and hardwired analog signals to the SIS Logic Solver. The SIS Logic Solver alarm output is routed directly to the CR alarm panel. The SIL rating for the SIS Logic Solver is SIL 3 to provide added confidence the alarm conditions will be highlighted to the CR Operator. The SIL 3 capable SIS Logic Solver is detailed in Subchapter 4.4.17.

All active and passive components associated with the credited PBVS instruments and alarm systems are designed to satisfy PC-1 seismic requirements.

#### 4.4.25.3 Functional Requirements

To ensure that the PBVS cell low-flow CR alarm performs its credited safety function, the following functional requirements must be met:

- On detection of low PBVS flow through the Cell, an alarm is annunciated in the CR.

To ensure that the Cell Negative Pressure CR alarm performs its credited safety function, the following functional requirements must be met:

- On detection of low dP in the Cell, an alarm is annunciated in the CR.

To ensure that the Drumoff Area, P&VG corridors, and Contactor Operating Deck Negative Pressure CR alarm performs its credited safety function, the following functional requirements must be met:

- On detection of low dP in the Drumoff Area, with respect to atmosphere, an alarm is annunciated in the CR;
- On detection of low dP in the P&VG corridor, with respect to atmosphere, an alarm is annunciated in the CR; and
- On detection of low dP in the Contactor Operating Deck, with respect to atmosphere, an alarm is annunciated in the CR.

To ensure that the PBVS HEPA filters Hi dP CR alarm performs its credited safety function, the following functional requirements must be met:

- On detection of high dP across the PBVS exhaust HEPA filters and cell inlet HEPA filters, an alarm is annunciated in the CR.

#### 4.4.25.4 System Evaluation

Functionality is ensured through the implementation of applicable SRs identified in the TSRs.

All active and passive components that comprise the sensing and instrumentation circuit and CR alarm circuits are considered SS components. The CR Annunciators are not SIFS. The SIL rating for the transmitter is SIL 2 and the SIS Logic Solver is SIL 3 to provide added confidence the alarm conditions will be highlighted to the CR Operator. The SIL 3 capable SIS Logic Solver is evaluated in Subchapter 4.4.17. The instrument loops and alarms are periodically tested.

Components associated with the Process Building Ventilation CR alarm systems are not required to operate during or after a seismic event.

There are no redundancy requirements for design of the credited Process Building Ventilation instrument sensing circuits, power supplies, or alarm panel components because they perform monitoring functions. To ensure reliability, the instrument loops are powered from dual power supplies from the SIS Logic Processor. A LOP to the transmitter loop would result in the CR alarm. A complete LOP would be evident to the CR Operator.

Component level, system level, and process level design; performance, functional, and safety test requirements; and acceptance criteria; along with applicable tolerances are documented by

Engineering in the AVD and referenced source documents. Performance attributes include identified SS testable features.

The initial testing program demonstrates that each active system performs as designed and the performance, functional, and safety design attributes are met. The documentation of the testing that verified the key attributes were satisfied as a part of the initial testing program is described in Subchapter 10.3.

The circuits are designed to the appropriate codes identified in P-DB-J-00004[8] and P-DB-J-00002[9].

#### 4.4.25.5 Controls (TSRs)

The PBVS Cell low-flow CR alarms, Cell Negative Pressure CR alarms, Drum Off Area Negative Pressure CR alarms, P&VG Corridor Negative Pressure CR alarms, and HEPA filters Hi dP CR alarms monitor the credited operational parameters of the PBVS. Surveillances will be required to maintain the reliability of these SS SSCs. Test equipment used in the surveillances is controlled by an M&TE program addressed in the TSRs as an Administrative Control.

### 4.4.26 PVVS HEPA Filter Instrumentation and Alarms

#### 4.4.26.1 Safety Function

The PVVS flow path ensures that non-negligible airborne releases from the process vessels are confined and filtered for all non-NPH events. The following instrumentation and alarms that monitor PVVS HEPA Filter availability are credited as SS controls:

- HEPA filters Hi dP CR alarms: dP sensors and Hi alarms on each of the PVVS exhaust HEPA filters to alert Operators to HEPA pluggage (high dP).

No direct Chapter 3 reference. This SSC supports the PVVS (Subchapter 4.4.11) and is designated as SSC-1.

#### 4.4.26.2 System Description

All active and passive components that comprise the sensing and instrumentation circuits and CR alarm circuits are considered SS components. The instrument loops consist of a transmitter and hardwired analog signal to the SIS Logic Solver. The SIS Logic Solver alarm output is routed directly to the CR alarm panel. The SIL rating for the SIS Logic Solver is SIL 3 to provide added confidence the alarm conditions will be highlighted to the CR Operator. The SIL 3 capable SIS Logic Solver is detailed in Subchapter 4.4.17.

All active and passive components associated with the credited PVVS instruments and alarm systems are designed to satisfy PC-1 seismic requirements.

#### 4.4.26.3 Functional Requirements

To ensure that the PVVS HEPA filters Hi dP CR alarms perform its credited safety function, the following functional requirement must be met:

- On detection of high dP across the PVVS exhaust HEPA filters, an alarm is annunciated in the CR.

#### 4.4.26.4 System Evaluation

Functionality is ensured through the implementation of applicable SRs identified in the TSRs.

All active and passive components that comprise the sensing and instrumentation circuit and CR alarm circuits are considered SS components. To ensure reliability, the instrument loops are powered from dual power supplies from the SIS Logic Processor. A LOP to the transmitter loop would result in the CR alarm. A complete LOP would be evident to the CR Operator.

The CR Annunciators are not SIFS. The SIL rating for the transmitter is SIL 2 and the SIS Logic Solver is SIL 3 to provide added confidence the alarm conditions will be highlighted to the CR Operator. The SIL 3 capable SIS Logic Solver is evaluated in Subchapter 4.4.17. The instrument loops and alarms are periodically tested.

Components associated with the PVVS CR alarm systems are not required to operate during or after a seismic event and are designed to satisfy PC-1 seismic requirements.

There is no redundancy requirement for design of the credited PVVS instrument sensing circuits, power supplies, or alarm panel components because they perform monitoring functions.

Component level, system level, and process level design; performance, functional, and safety test requirements; and acceptance criteria; along with applicable tolerances are documented by Engineering in the AVD and referenced source documents. Performance attributes include identified SS testable features.

The initial testing program demonstrates that each active system performs as designed and the performance, functional, and safety design attributes are met. The documentation of the testing that verified the key attributes were satisfied as a part of the initial testing program is described in Subchapter 10.3.

The circuits are designed to the appropriate codes identified in P-DB-J-00004[8] and P-DB-J-00002[9].

#### 4.4.26.5 Controls (TSRs)

The PVVS HEPA filters Hi dP CR alarms monitors the HEPA filter availability. Surveillances will be required to maintain the reliability of these SS SSCs. Test equipment used in the

surveillances is controlled by an M&TE program addressed in the TSRs as an Administrative Control.

### 4.4.27 Analytical Laboratory Ventilation System HEPA Filter Instrumentation and Alarms

#### 4.4.27.1 Safety Function

The Analytical Laboratory Ventilation System operation ensures that non-negligible airborne releases from the Laboratory area are confined and filtered for all non-NPH events. The following instrumentation and alarms that monitor the Analytical Laboratory Ventilation System Hot Cell exhaust HEPA Filter availability are credited as SS controls:

- HEPA filters Hi dP CR alarm: dP sensor and Hi alarm on the Analytical Laboratory Ventilation System Hot Cell exhaust HEPA filters alert Operators to HEPA pluggage (high dP).

No direct Chapter 3 reference. Supports Analytical Laboratory Ventilation System (Subchapter 4.4.14) and is designated as SSC-3.

#### 4.4.27.2 System Description

All active and passive components that comprise the sensing and instrumentation circuits and CR alarm circuits are considered SS components. The instrument loops consist of a transmitter and hardwired analog signal to the SIS Logic Solver. The SIS Logic Solver alarm output is routed directly to the CR alarm panel. The SIL rating for the SIS Logic Solver is SIL 3 to provide added confidence the alarm conditions will be highlighted to the CR Operator. The SIL 3 capable SIS Logic Solver is detailed in Subchapter 4.4.17. The alarms are fail-safe upon LOP.

#### 4.4.27.3 Functional Requirements

To ensure that the Analytical Laboratory Ventilation System HEPA filters Hi dP CR alarm performs its credited safety function; the following functional requirements must be met:

- On detection of high dP across the Analytical Laboratory Ventilation System Hot Cell exhaust HEPA filters, the associated CR alarm is annunciated.

#### 4.4.27.4 System Evaluation

Functionality is ensured through the implementation of applicable SRs identified in the TSRs.

All active and passive components that comprise the sensing and instrumentation circuit and CR alarm circuits are considered SS components. To ensure reliability, the instrument loops are powered from dual power supplies from the SIS Logic Processor. A LOP to the transmitter loop would result in the CR alarm. A complete LOP would be evident to the CR Operator.

The CR Annunciators are not SIFS. The SIL rating for the transmitter is SIL 2 and the SIS Logic Solver is SIL 3 to provide added confidence the alarm conditions will be highlighted to the CR Operator. The SIL 3 capable SIS Logic Solver is evaluated in Subchapter 4.4.17. Components associated with the Analytical Laboratory Ventilation System CR alarm systems are not required to operate during or after a seismic event.

The Analytical Laboratory Ventilation System CR alarm system is not a redundant system. The instrument loops are periodically tested.

Component level, system level, and process level design; performance, functional, and safety test requirements; and acceptance criteria; along with applicable tolerances are documented by Engineering in the AVD and referenced source documents. Performance attributes include identified SS testable features.

The initial testing program demonstrates that each active system performs as designed and the performance, functional, and safety design attributes are met. The documentation of the testing that verified the key attributes were satisfied as a part of the initial testing program is described in Subchapter 10.3.

The circuits are designed to the appropriate codes identified in P-DB-J-00004[8] and P-DB-J-00002[9].

#### 4.4.27.5 Controls (TSRs)

The Analytical Laboratory Ventilation System HEPA filters Hi dP CR alarms monitor the HEPA filter availability. Surveillances will be required to maintain the reliability of these SS SSCs. Test equipment used in the surveillances is be controlled by an M&TE program addressed in the TSRs as an Administrative Control.

### 4.4.28 AFF Ventilation System Instrumentation and Alarms

#### 4.4.28.1 Safety Function

The AFF Ventilation System provides a filtered pathway for airborne radioactive material present within the AFF for all non-NPH events. The following instrumentation and alarms, which monitor AFF Ventilation System operation, are credited as SS controls:

- AFF Process Vessel Area Negative Pressure CR alarm: dP instruments and alarms to ensure negative pressure inside the AFF Process Vessel Area; and
- HEPA filter Hi dP CR alarm: dP sensors and Hi alarms on the AFF Ventilation System exhaust HEPA filter to alert Operators to HEPA pluggage (high dP).

No direct Chapter 3 reference. This SSC supports the AFF Ventilation System (Subchapter 4.4.16) and is designated as SSC-4.

#### 4.4.28.2 System Description

All active and passive components that comprise the sensing and instrumentation circuits and CR alarm circuits are considered SS components. The instrument loops consist of a transmitter and hardwired analog signal(s) to the SIS Logic Solver. The SIS Logic Solver alarm outputs are routed directly to the CR alarm panel. The SIL rating for the SIS Logic Solver is SIL 3 to provide added confidence the alarm conditions will be highlighted to the CR Operator. The SIL 3 capable SIS Logic Solver is detailed in Subchapter 4.4.17.

All active and passive components associated with the credited AFF Ventilation System instruments and alarm systems are designed to satisfy PC-1 seismic requirements.

#### 4.4.28.3 Functional Requirements

To ensure that the AFF Process Vessel Area Negative Pressure CR alarm performs its credited safety function, the following functional requirement must be met:

- On detection of low dP in the AFF Process Vessel Area, the associated CR alarm is annunciated.

To ensure that the AFF Ventilation System HEPA filter Hi dP CR alarm performs its credited safety function, the following functional requirement must be met:

- On detection of high dP across the AFF Ventilation System exhaust HEPA filter, the associated CR alarm is annunciated.

#### 4.4.28.4 System Evaluation

Functionality is ensured through the implementation of applicable SRs identified in the TSRs.

All active and passive components that comprise the sensing and instrumentation circuit and CR alarm circuits are considered SS components. To ensure reliability, the instrument loops are powered from dual power supplies from the SIS Logic Processor. A LOP to the transmitter loop would result in the CR alarm. A complete LOP would be evident to the CR Operator.

The CR Annunciators are not SIFS. The SIL rating for the transmitter is SIL 2 and the SIS Logic Solver is SIL 3 to provide added confidence the alarm conditions will be highlighted to the CR Operator. The SIL 3 capable SIS Logic Solver is evaluated in Subchapter 4.4.17. The instrument loops and alarms are periodically tested. Components associated with the AFF Ventilation System CR alarm systems are not required to operate during or after a seismic event.

There are no redundancy requirements for design of the credited AFF Ventilation System instrument sensing circuits, power supplies or alarm panel components because they perform monitoring functions.

Component level, system level, and process level design; performance, functional, and safety test requirements; and acceptance criteria; along with applicable tolerances are documented by Engineering in the AVD and referenced source documents. Performance attributes include identified SS testable features.

The initial testing program demonstrates that each active system performs as designed and the performance, functional, and safety design attributes are met. The documentation of the testing that verified the key attributes were satisfied as a part of the initial testing program is described in Subchapter 10.3.

The circuits are designed to the appropriate codes identified in P-DB-J-00004[8] and P-DB-J-00002[9].

#### 4.4.28.5 Controls (TSRs)

AFF Process Vessel Area Negative Pressure CR alarms and HEPA filter Hi dP CR alarms monitor the system availability of the AFF Ventilation System. Surveillances will be required to maintain the reliability of these SS SSCs. Test equipment used in the surveillances is controlled by an M&TE program addressed in the TSRs as an Administrative Control.

### 4.4.29 Waste Container Vents

#### 4.4.29.1 Safety Function

Vents meeting the requirements of the Savannah River Site (SRS) Solid Waste Facility Waste Acceptance Criteria (WAC) will be installed on waste drum(s) or other waste container(s) that contain waste that could produce flammable vapor. The vent prevents build-up of flammable vapor in containers and a possible explosion.

The HA identified Waste Container Vents as EC-5 for event categories:

- Fire (deflagration) and
- Explosion.

Waste Container Vents are not credited as an SS control for any of the DBA events.

#### 4.4.29.2 System Description

Button vents or other vent designs (usually containing a filter) will be installed on waste drums or other waste containers that contain waste having the potential to generate flammable vapors as required by the SRS Solid Waste Facility WAC.

#### 4.4.29.3 Functional Requirements

To ensure that the Waste Container Vents perform their credited safety function, the following functional requirements must be met:

- Flammable vapors generated in the waste container are vented as required by the SRS Solid Waste Facility WAC by installing vents approved for use by SRS Solid Waste Facility.

#### 4.4.29.4 System Evaluation

Commercially available Waste Container Vents have been used for many years at DOE facilities. Vents will be installed on waste drum(s) or other waste container(s) that contain waste that could produce flammable vapor in quantities requiring vents as determined by the SRS Solid Waste WAC. Because long-term storage of waste in drums or other containers is not permitted at the SWPF, testing of the vents is not required.

#### 4.4.29.5 Controls (TSRs)

Waste Container Vents are a passive design feature and do not require routine maintenance or surveillance to demonstrate operability.

### 4.4.30 13.8-Kilovolt Manual Disconnect Switches

#### 4.4.30.1 Safety Function

The 13.8-Kilovolt (kV) Manual Disconnect Switches provide a means of removing all AC electrical motive power from the SWPF resulting in the stopping of all external recirculation pumps that may be adding heat to process vessels.

The HA identified 13.8-kV Manual Disconnect Switches as AC-2 for event categories:

- NPH.

The 13.8-kV Manual Disconnect Switches are credited as SS controls (AC-2) for the following DBA event:

- Seismic.

#### 4.4.30.2 System Description

The 13.8-kV Manual Disconnect Switches consist of two load interrupter switches located on separate medium voltage switchgear located in separate enclosures on the 13.8-kV Disconnect Switch Pad. The pad is located north of the Process Building between the Chiller Pad and the Administration Building. Each load interrupter switch is a three-poled, ganged, single-throw unit. The switches are provided with manual quick-make, quick-break over toggle type mechanism that does not require the use of a chain or cable for operation. The switches are locally operated by manual action to interrupt power to the SWPF electrical loads. Each switch will interrupt power from one of the two 13.8-kV feeder lines to the SWPF electrical loads. Therefore, when both switches are open, all power from the 13.8-kV feeder lines to the SWPF will be interrupted, ensuring that power to all external recirculating pumps is interrupted and the pumps stopped.

All active and passive components associated with the credited 13.8-kV Manual Disconnect Switches are designed to satisfy PC-3 seismic requirements.

#### 4.4.30.3 Functional Requirements

To ensure that the 13.8-kV Manual Disconnect Switches perform their credited safety function, the following functional requirement must be met:

- When manually actuated, the 13.8-kV Manual Disconnect Switches interrupt all 13.8-kV electrical power feeds to the SWPF.

#### 4.4.30.4 System Evaluation

The 13.8-kV Manual Disconnect Switches are addressed in the Design Features section of the TSRs. Functionality is ensured through the implementation of the Preventive Maintenance Program.

All active and passive components that comprise the 13.8-kV Manual Disconnect Switches are considered SS components.

All active and passive components associated with the 13.8-kV Manual Disconnect Switches are designed to satisfy PC-3 seismic requirements. The system is designed to appropriate codes identified in P-DB-J-00004[8] and P-DB-J-00002[9].

#### 4.4.30.5 Controls (TSRs)

The 13.8-kV Manual Disconnect Switches ensure the ability to interrupt power to all external recirculating pumps in the SWPF. The 13.8-kV Manual Disconnect Switches are covered by the Preventive Maintenance Program, which schedules appropriate maintenance activities consistent with vendor recommendations (see EQIP-ELEC-002, *MVS Maintenance Schedule*[32]). The Preventive Maintenance Program is addressed in the TSRs as an Administrative Control.

This page intentionally left blank.

## 4.5 Specific Administrative Control

The following programs shall be established, implemented, and maintained.

### 4.5.1 WAC Program (TSR Administrative Control 5.8.3.1)

#### 4.5.1.1 Safety Function

The SWPF WAC program protects inputs and assumptions for the safety analysis with respect to the characteristics of the feed waste transferred from the H-Area Tank Farm (HTF) to SWPF. The WAC limits for soluble Cs-137 and total Sr-90 reflect the more restrictive limits derived from SWPF's evaluation of the SRS Liquid Waste System hydrogen generation rate Potential Inadequacy in the Safety Analysis (PISA) (see S-RPT-J-00011, *SWPF Impact of SRS Liquid Waste HGR PISAs on the SWPF Safety Basis*[33]). This control is designated a SAC to validate the safety analysis and is intrinsic to the HA and AA.

#### 4.5.1.2 SAC Description

Feed waste is transferred in mini-batches with a nominal volume of 23,200 gallons from the SWPF Feed Tank in HTF to AST-A (TK-101) in SWPF. This control requires that waste be qualified as compliant with the requirements of X-ESR-J-00001, *SWPF Feed Waste Acceptance Criteria*[34] prior to feeding each macro-batch to SWPF. HTF accumulates the waste from several source tanks into a blend tank, where the supernate is mixed, sampled, and characterized to qualify the material for feed to SWPF. The blend tank samples are analyzed in a laboratory. The required parameters are variously measured directly, calculated from analytical results, or based on process knowledge. The SWPF Feed Tank typically contains material transferred from two or more blend tanks.

When sample results are utilized to demonstrate compliance with a limit/requirement, an analytical uncertainty of 2 sigma shall be included prior to comparing to the limit/requirement.

The waste sampling and characterization scheme is fairly complex to automate with engineered equipment and in-line characterization instruments are completely impractical. Therefore, an Administrative Control is more appropriate.

#### 4.5.1.3 Functional Requirements

The WAC Program shall ensure that composition of waste streams received into the facility are within analyzed limits. Waste streams received into the facility shall comply with the limits/requirements (accounting for analytical uncertainty) for the following items:

- Soluble $^{137}$Cs ≤ 2.0 Curies per gallon (Ci/gal),
- Suspended solids ≤ 1,200 milligrams per liter (mg/L),
- Soluble $^{90}$Sr ≤ 5.21E-03 Ci/gal,

- Total $^{90}Sr \leq$ 1.1E-01 Ci/gal,
- $NO_{effective} \geq$ 1.0 Molar (M),
- Inhalation dose potential (total) ≤ 1.1E+06 rem/gallon,
- Inhalation dose potential (solution) ≤ 4.4E+05 rem/gallon,
- Uranium (U) ≤ 25 mg/L,
- Plutonium (Pu) ≤ 2.5 mg/L, and
- U content ≤ 8 wt% U-235.

Waste streams not bounded by the analyzed isotopic and chemical inventory assumptions shall not be accepted unless an Unreviewed Safety Question (USQ) review has been performed and approved.

Transfer of waste from SWPF to other facilities shall meet the receiving facility Safety Basis. If a proposed change impacts meeting the receiving facility's requirements, the receiving facility shall perform a USQ review to determine if the proposed change is within the receiving facility's Safety Basis and shall approve the change prior to implementing the proposed change.

#### 4.5.1.4 SAC Evaluation

The Waste Compliance Plan (WCP) specifies the actions and technical evaluations that ensure that the functional requirements of the WAC are met. Periodic sampling of AST-A (TK-101) and other SWPF process vessels gives additional assurance that the safety function of this SAC is met.

Waste is characterized based on sample analysis and process knowledge. Qualified personnel perform sampling and analysis per approved procedures. Laboratory Quality Assurance practices and sample analysis protocols ensure the validity of associated sample results. For SWPF feed samples analyzed at SWPF, these practices and protocols are described in Subchapter 5.5.5.2.23.

If waste cannot be fully qualified for WAC compliance prior to a transfer to SWPF; HTF and SWPF jointly perform an assessment to determine if SWPF can still process the waste. If waste is noncompliant only with WAC elements not covered by the SAC, it can be transferred per a special WCP, conditional to a negative USQ determination. In this case, DOE approval is not required to transfer the waste to SWPF under a special WCP or other options to resolve the problem. If waste is noncompliant with WAC elements that are covered by the SAC, the USQ process will determine if DOE approval is required for waste transfer.

#### 4.5.1.5 Controls (TSRs)

This SAC is implemented through the Administrative Controls section of the TSRs.

### 4.5.2 Process Chemistry Control Program (TSR Administrative Control 5.8.3.2)

#### 4.5.2.1 Safety Function

The Process Chemistry Control Program SAC protects ICs for the safety analysis based on particular parameters of selected cold chemicals. This control is designated a SAC to validate the safety analysis accordingly.

Subchapter 3.3.2.3.2.1 (ICs) describes a Process Chemistry Control Program that ensures process chemicals are properly specified and receipt inspected, properly stored, and properly sampled as required. It further states that this program protects the assumptions used in consequence analysis.

The SAC covers cold chemicals and specific parameters as follows:

- Alcohol content in stock MST ≤ 500 parts per million (ppm) (combined methanol and ethanol). This is the precise specification listed as Assumption 30 in Calculation S-CLC-J-00033, *Time to Reach the Composite Lower Flammability Limit (CLFL) for SWPF Process Vessels*[35]. It ensures a negligible impact on the flammable gas concentration in the overhead space of AST-A (TK-101) and Alpha Sorption Tank-B (AST-B) (TK-221) when MST is added.
- CSSX solvent diluent is consistent with the parameters analyzed in the flammability analysis (i.e., Isopar L).

#### 4.5.2.2 SAC Description

The SAC ensures the required parameters of select cold chemicals at the procurement stage. It directs that the alcohol limit in MST and the diluent to be used in CSSX solvent be prescribed in formal procurement specifications. The control then requires that all parameters be verified for compliance per the vendor certifications of analysis upon receiving the chemicals in SWPF and prior to placement in storage tanks.

The requirements on cold chemicals are few, strictly administrative, and only observed at extended intervals. An automated process based on equipment is neither feasible nor needed.

#### 4.5.2.3 Functional Requirements

Upon receiving MST and CSSX solvent/diluent at SWPF and prior to placement of the material in CCA tanks, the vendor characterization of the chemicals must be verified to comply with the following limits:

- Alcohol content of MST (methanol plus ethanol) less than procurement specification and
- The diluent used in the CSSX solvent is Isopar L.

#### 4.5.2.4 SAC Evaluation

V-QP-J-00001, *SWPF Quality Assurance Plan*[36], provides requirements for the procurement and quality verification of equipment, materials, and services. These functions are effected through procedures, procurement specifications, inspection checklists, and other administrative tools. This part of the Quality Assurance program provides the SAC on cold chemicals.

P-ESR-J-00013, *SWPF Analytical Laboratory Operations Plan*[37], includes support to the safety basis in the operational agenda for the laboratory. The plan defines a broad sampling and analysis program which implements the SAC on process streams. Qualified personnel perform sampling and analysis per approved procedures. The analytical equipment is verified functional and calibrated per TSR Administrative Control 5.8.2.7.

#### 4.5.2.5 Controls (TSRs)

This SAC is implemented through the Administrative Controls section of the TSRs.

### 4.5.3 Ignition Source Control Program (TSR Administrative Control 5.8.3.3)

#### 4.5.3.1 Safety Function

The safety function of this control is to preclude activities that could introduce an ignition source into any location within the Process Vessel Cells and the WTE.

This safety function is credited for the AA events Process Vessel Cell Fire and ASP Vessel Explosion.

#### 4.5.3.2 SAC Description

This SAC precludes personnel actions or unauthorized changes to the facility that could introduce ignition sources into the Process Vessel Cells, or the WTE. CFF skirt tubes and the CFF shell during filter tube bundle replacement activities are exempted from this SAC because there are no credible scenarios leading to explosions or fires in the part of the Process Vessel Cell after the filter loop is drained.

This control is a SAC because there is no practical method to devise an engineered safety system that would preclude personnel actions or unauthorized changes to the facility that could introduce ignition sources into the Process Vessel Cells or the WTE.

#### 4.5.3.3 Functional Requirements

Energized electrical components shall be confirmed by engineering evaluation to not pose an ignition hazard within the general area of the cells prior to being inserted into the Process Vessel Cells or the WTE. This requirement is not applicable to the CFF skirt tubes or the CFF shell during filter tube bundle replacement activities.

#### 4.5.3.4 SAC Evaluation

There are no planned maintenance activities that require entry into the Process Vessel Cells or WTE over the life of the facility. The only expected insertion of equipment into the general area of the Process Vessel Cells is a portable camera that can be inserted through an access port on an as-needed basis. Maintainable items (e.g., extended sleeve valves, thermocouples, interface level detectors) are designed to be removed from the Process Vessel Cells or WTE for the performance of maintenance. CFF tube bundles are replaced without the need for personnel entry into the cell.

#### 4.5.3.5 Controls (TSRs)

This SAC is implemented through the Administrative Controls section of the TSRs.

### 4.5.4 Solvent Removal Program (TSR Administrative Control 5.8.3.4)

#### 4.5.4.1 Safety Function

The safety function of this control is to ensure the volume of CSSX solvent in a floating layer within the FFT-B (TK-222) and the MST/Sludge Transfer Tank (MSTT) (TK-224) does not reach the values assumed in the safety analysis. The safety function is met by periodically removing the liquid from the Intermediate Storage Tank (IST) (TK-220) between CSSX and the FFT-B (TK-222)/MSTT (TK-224), thereby recovering any solvent present in the tank and preventing an excessive pumpdown or other unplanned activities in the IST (TK-220) from moving excessive amounts of bulk solvent in the AST-B (TK-221) and subsequently the FFT-B (TK-222)/MSTT (TK-224).

This safety function is applicable when multi-strike operations are occurring in AFF.

This safety function is credited for HA events Fire and Explosion, as well as AA events AFF Vessel Explosion and seismic.

#### 4.5.4.2 SAC Description

The Cesium (Cs)-depleted Clarified Salt Solution (CDCSS) stream flows from the DSS Coalescer (TK-201) to the IST (TK-220) in AFF during multi-strike operations. The IST (TK-220) provides a break between the continuous CSSX process and the batch-operated AFP. From the IST (TK-220), batches of waste are moved sequentially through the AST-B (TK-221), FFT-B (TK-222), and MSTT (TK-224). The IST (TK-220) contains a mixing eductor. Operation of the mixing eductor is required prior to sampling the tank; however, the IST (TK-220) has no routine sampling requirements during multi-strike operations (P-FDD-J-00001, *SWPF Analytical Laboratory Design Requirements*[38]). The mixing eductor may also be operated at other times during multi-strike operations, but there is no technical requirement for it to run. The AST-B (TK-221), FFT-B (TK-222) and MSTT (TK-224) contain bladed agitators. The bladed agitators in these tanks are routinely operated to the maximum extent practical during multi-strike

operation in consideration of the solids present in the tanks (X-SD-J-00004, *SWPF Alpha Finishing Process System Description*[39]).

The bladed agitator in AST-B (TK-221) has three sets of blades. The lowest blades are approximately 1 ft above the tank bottom and have a diameter of about 2 ft. The two upper sets of blades each have a diameter of over 6 ft and are located approximately 6 ft and 11 ft above the tank bottom. The agitators in FFT-B (TK-222) also has three sets of blades, with the lowest set having a smaller diameter and being located closer to the tank bottom than AST-B (TK-221). The agitators are designed to keep the solids in the tank well-mixed during multi-strike operation, allowing for representative sampling of the tank contents. The agitators rotate clockwise, driving the liquid in the center of the tank down and causing liquid to flow upward near the tank walls. The AST-B (TK-221) and FFT-B (TK-222) are designed with three vertical baffles mounted on the tank walls to enhance the mixing effects of the agitators.

Because the bladed agitators are run extensively during multi-strike operation, any solvent that enters these tanks will remain mixed with the aqueous waste and will not separate and form a large floating layer at the top of the waste. The solvent would instead pass through the tanks with the aqueous waste, and move forward to the DSS Hold Tank (DSSHT) (TK-207) and the SSRT (TK-104).

During multi-strike operations, samples to demonstrate compliance with the WACs of downstream facilities (i.e., Tank 50 in the CST Facilities, Defense Waste Processing Facility [DWPF]) are taken in the AST-B (TK-221) (CDCSS stream) and the SSRT (TK-104) (MST/sludge solids). Both of the sample results are compared to the applicable limits for traces of Isopar entrained with the waste streams. If an appreciable amount of Isopar were to be present in AST-B (TK-221) for any reason during multi-strike operation, the operation of the AST-B agitators would ensure that the Isopar would be detected by the sample taken to demonstrate WAC compliance. The volume of Isopar corresponding to the maximum concentration allowed by the WAC in a full batch of waste is about 3 gallons.

The first four vessels that the CDCSS passes through after exiting the final contactor are normally quiescent (DSS Stilling Tank [TK-211], BDT [TK-206], DSS Coalescer [TK-201], IST [TK-220]). The next three vessels along the process flowpath during multi-strike operations are normally agitated using bladed agitators. The DSS Coalescer (TK-201) and DSS Stilling Tank (TK-211) normally operate with a floating layer of solvent over the CDCSS. If excess solvent is present in the stream its next most likely location to accumulate is the BDT (TK-206). All these locations are in the CPA. The most likely tank to accumulate a floating layer of solvent in the AFF is the IST (TK-220), because it may be mixed infrequently and it is the first tank in AFF that the CDCSS enters.

Multiple barriers exist that prevent moving a volume of Isopar approaching 70 gallons from a floating layer in the IST (TK-220) to a floating layer over concentrated solids slurry in the FFT-B (TK-222).

1. During multi-strike operations, a solvent recovery is performed on the IST (TK-220) at intervals that do not exceed 1,420,000 gallons of CDCSS processed through the tank (SAC).
2. The BPCS programming automatically stops the IST transfer pumps when tank level is reduced to approximately 1 ft. A separate interlock in the BPCS will stop the transfer pumps at a level several inches lower. Since the IST process piping exits the bottom of the tank, a substantial buffer of salt solution will still exist under the solvent layer in the tank's heel, preventing entrainment of bulk amounts of solvent during the routine pump down of the tank. (This barrier is not classified as SS.)
3. During multi-strike operations, AST-B (TK-221) is sampled to demonstrate compliance with the downstream facility's WAC, which includes a limit of 87.5 ppm for Isopar (Safety Basis interface control for HTF, see Subchapter 5.7.2 and X-WCP-J-00001, *SWPF Waste Compliance Plan for Decontaminated Salt Solution Transfers to Tank 50*[40]). AST-B (TK-221) is agitated almost continuously during multi-strike operations, so any solvent entering the tank from the IST (TK-220) will be dispersed throughout the volume of the AST-B (TK-221) and will be properly represented in the sample taken for analysis. It should be noted that the Isopar concentration limit for WAC compliance (87.5 ppm) is much more restrictive than the Isopar concentration corresponding to 70 gallons in a nominal 30,000-gallon batch (>1400 ppm).
4. FFT-B (TK-222) receives batches of salt solution treated with an MST slurry from the AST-B (TK-221) during multi-strike operations. Any solvent entering the FFT-B (TK-222) during a transfer from the AST-B (TK-221) will be distributed throughout the FFT-B (TK-222) by the tank's agitator, which runs almost continuously. The majority of the solvent in FFT-B (TK-222) in this scenario would pass through an operating CFF and enter the DSSHT (TK-207), as the FFT-B (TK-222) volume is reduced from its working volume of ~31,900 gallons to 2,000 gallons or less over approximately 21.6 hours. Since FFT-B (TK-222) is well-mixed, only approximately 6% of the solvent entering the tank will remain in the tank after the processing of a single AST-B (TK-221) batch, the other 94% moving forward to the DSSHT (TK-207). It is not credible that the solvent would go to a thick floating layer in the FFT-B (TK-222), and remain in that layer as the liquid surface elevation is slowly reduced and passes through the height of the two upper sets of agitator blades over a 21.6-hour period. (This barrier is not classified as SS.)

The four barriers listed above that prevent moving a volume of Isopar approaching 70 gallons from a floating layer in the IST (TK-220) to a floating layer in the FFT-B (TK-222) also prevent that solvent from being transported in bulk to the MSTT (TK-224). This is because process transfers into the MSTT (TK-224) are from only the FFT-B (TK-222). These transfers occur after the FFT-B (TK-222) has accumulated solids from seven AST-B (TK-221) batch transfers and concentrated them down to a volume that is within the capacity of the MSTT (TK-224). As noted in barrier #4 above, even if a process upset had occurred that moved solvent from the IST (TK-220) into the FFT-B (TK-222) during the transfer of the seventh batch from the AST-B (TK-221), 94% of the Isopar volume would move forward from the FFT-B (TK-222) to the DSSHT (TK-207) and only 6% of the Isopar volume will remain with the concentrated solid slurry in the FFT-B (TK-222). Because the 20-gallon Isopar inventory assumed for the MSTT

(TK-224) is much greater than 6% of the 70-gallon Isopar inventory assumed for the FFT-B (TK-222), the measures taken to protect the 70-gallon Isopar inventory in the FFT-B (TK-222) will also protect a 20-gallon Isopar inventory in the MSTT (TK-224).

The 1,420,000-gallon interval for solvent recovery operations is based on a conservative assumption that 30 ppm of Isopar separates from the aqueous stream in each batch processed through the IST (TK-220) and remains in a floating layer at the top of the liquid. This assumption for the amount of Isopar removed from the CDCSS stream exceeds the 10-mg/L Isopar concentration typically observed in the aqueous flow downstream of the coalescer during sustained steady-state CSSX operations at the Parsons Technology Center (See Figure 5-3 of P-RPT-J-00024, *SWPF Next Generation Solvent Test Report*[41]). The operating experience for concentrations of Isopar entrained in the salt solution at the Parsons Technology Center is consistent with the typical operating history of the Modular CSSX Unit at SRS. 1,420,000 gallons of salt solution at a concentration of 30 ppm contains approximately 70 gallons of Isopar.

The 70-gallon Isopar volume used to establish the interval for the solvent recovery operation is based on 100% of the Safety Analysis value for FFT-B (TK-222). This is less than the Safety Analysis value for either the IST (TK-220) or AST-B (TK-221). It should be noted that the Safety Basis calculations concerning fires and times to reach flammable conditions considered accumulations of floating solvent layers up to 100 gallons the IST (TK-220) and AST-B (TK-221)

A solvent recovery from the IST (TK-220) is performed by reducing the tank level as low as practicable with the tank's transfer pump, then using the tank's sample pump to remove essentially all the remaining liquid. The sample pump suction taps off of the transfer pump suction line, which exits from the center of the tank's bottom head. The discharge of the sample pump for the IST (TK-220) can be aligned to direct the discharge flow to pass through a series of filters before delivering the liquid to the Solvent Drain Tank. The filters are provided in the pathway to ensure that significant amounts of MST or other solids are not transferred to the Solvent Drain Tank (TK-208) since the solids could lead to operational issues if they were fed to the CSSX contactors. Following performance of the solvent recovery steps, the IST can be placed back into normal service.

There are no SSCs whose failure would result in losing the ability to complete the action required by the SAC. This item requires that a solvent recovery operation be conducted on the IST (TK-220) prior to exceeding a specified processing volume of CDCSS. If process equipment were not available to support the solvent recovery, further operation of AFF can be delayed until the solvent recovery operation can be conducted. Also, there are multiple means of evaluating the CDCSS throughput of AFF. In addition to the flow instruments on process pump outlets there are level instruments on the AFF process vessels. Therefore, no SSCs are required to be functionally classified as SS in order to support this SAC.

This control is a SAC due to the variety of requirements, which cannot be accomplished using an engineered safety system.

#### 4.5.4.3 Functional Requirements

A solvent recovery operation shall be periodically performed on the IST (TK-220) when AFF is in Multi-Strike Mode. The processing interval between solvent recovery operations shall not exceed 1,420,000 gallons while in Multi-Strike Mode. The interval between solvent recovery operations while in Multi-Strike Mode is based on the CDCSS volumes processed as measured at the IST transfer pump discharge during transfers from IST (TK-220) to AST-B (TK-221). Prior to entering Multi-Strike Mode, it shall be confirmed that the volume of CDCSS processed since the most recent solvent recovery operation on the IST (TK-220) is less than 1,420,000 gallons (considering volumes discharged from both the IST [TK-220] and the AST-B [TK-221] while in Single-Strike Mode).

#### 4.5.4.4 SAC Evaluation

The actions of this SAC are considered to be routine tasks using normal operating procedures.

Performance of this SAC relies on level indicators in the source tank (i.e., IST [TK-220]) and the receipt tank (i.e., Solvent Drain Tank [TK-208]) and the flow instrument on the discharge of the IST Sample Pump. The trends on the IST and Solvent Drain Tank level indicators at the start of the evolution indicate that the appropriate flow path for solvent recovery has been established. The IST Sample Pump flow instrument indicates when air has been entrained into the sample pump stream, indicating that the IST (TK-220) has been emptied to the extent practical. These level and flow instruments are ensured to be reliable by inclusion in the Installed Process Instrumentation (IPI) or M&TE program. The instrument outputs are displayed via the BPCS. The BPCS is reliable for this application in that it is designed for very high availability and there are indications available to the CR staff if the BPCS is not functioning.

There are no unique or complex aspects to this attribute, and no specialized operator training is required.

#### 4.5.4.5 Controls (TSRs)

This SAC is implemented through the Administrative Controls section of the TSRs.

### 4.5.5 Tank Agitation Program – AST-A (TK-101), FFT-A (TK-102), SSRT (TK-104) (Limiting Conditions for Operation [LCO] 3.1.5)

#### 4.5.5.1 Safety Function

The safety function of this control is to maintain the solids routinely suspended in the process vessels while the vessels contain a sufficient volume of liquid with a significant solids concentration that could pose a potential trapped gas issue if the solids were allowed to settle and remain undisturbed for an extended period of time.

This safety function is credited for HA events Fire and Explosion, as well as AA event ASP Vessel Explosion.

#### 4.5.5.2 SAC Description

This SAC is a routine periodic check that the APAs are operating normally in the applicable process vessels.

The satisfactory completion of this control can be determined by monitoring the status of the APA equipment module on the BPCS showing the valves are alternately pressurizing and venting the several pulse pots for each APA. This check can be done in real time via the BPCS.

This control is a SAC because it is protecting an IC assumed in the AA (i.e., process vessels containing significant solids are normally well-mixed during processing). It is not credited with preventive nor mitigative functions. Therefore, no SSCs are required to be functionally classified as SS in order to support this SAC.

At high process vessel levels, an APA uses compressed air as a motive force, but does not directly introduce air into the vessel. Operation of the APA is based on introducing compressed air into pulse pots and venting the exhaust sequentially at a predetermined frequency. This is referred to as Lift/Pulse mode. Each cycle of introducing compressed air and venting the pulse pot causes the liquid to be forced out of the pulse pot into the vessel and then drawn back into the pulse pot from the vessel. The PMVS maintains a negative pressure at the pulse pot exhaust to draw the liquid into the pulse pots and maintain proper mixing.

At lower process vessel levels, the APAs are operated in one of two lift and drop modes (i.e., Lift/Drop, Lift/Drop-Low). In these modes, instead of compressed air being used to force the liquid out of the pulse pot, the pulse pots are sequentially vented to the vessel head space and gravity is the sole motive force pushing the liquid column from the pulse pot into the vessel. PMVS is still relied upon to refill the pulse pots. When tank level is extremely low, the APA operates in a lift and drop mode where only the center pulse pot is used (Lift/Drop-Low). After tank level increases enough to provide adequate coverage of the perimeter pulse pots, the APA shifts to the other lift and drop mode where all the pulse pots are sequentially used (Lift/Drop).

The BPCS automatically shifts between the APA modes (i.e., Lift/Pulse, Lift/Drop, Lift/Drop-Low) based on the liquid level in the process vessel. The BPCS also automatically varies the APA charge tank pressure as a function of liquid level in the process vessel. The pulse time for each step in the automatic pulse pot valve sequence is varied by the BPCS based on the density of the liquid in the process vessel (see X-PCD-J-00004, *SWPF Automation Functional Control Sequence for: Alpha Strike Process*[42]).

In the event that normal operation of the APAs via the BPCS is not available, the APAs in the affected tank shall be pulsed or air-sparged before 10 days has elapsed from the time the tank was last mixed. The amount of pulsing of the APAs (without returning the APAs to “normal operation”) sufficient to release trapped gas bubbles within settled solids shall be documented by a testing report or an engineering evaluation. The key parameters for air sparging (e.g., APA charge tank pressure, sparge duration, number of pulse pots) shall also be documented by a testing report or an engineering evaluation.

Air-sparging an APA pulse pot is accomplished by aligning the pulse pot to the pressurized APA charge tank for a duration sufficient to force all the liquid from the pulse pot into the tank and maintaining continued air flow after the pulse pot has been emptied for the desired duration of the air sparge. The air exiting the bottom of the pulse pot will rise through the liquid in the tank due to buoyant forces and will cause upward movement of tank liquid in the region of the pulse pot due to movement of the air bubbles as well as downward circulating currents in other parts of the tank. The air from sparging that enters the tank headspace will affect the vacuum in the tank, unless it is within the capacity of the PVVS to maintain normal vacuum.

The conditions under which a tank will be air-sparged, if necessary, shall be such that facility workers will not be exposed to an unfiltered airborne radioactivity release. If PBVS and PVVS exhaust fans are running and system parameters are within the limits of the TSRs, facility workers will not be exposed to an unfiltered airborne radioactivity release due to sparging the APAs.

#### 4.5.5.3 Functional Requirements

APAs in the AST-A (TK-101), FFT-A (TK-102) and the SSRT (TK-104) shall be operating.

The status of the APAs shall be periodically confirmed by operators.

The presence of sufficient PMVS header vacuum to support APA operations shall be periodically confirmed by operators.

#### 4.5.5.4 SAC Evaluation

The actions of this SAC are considered to be routine tasks using normal operating procedures. There are no unique or complex aspects to this attribute, and no specialized operator training is required.

System parameters, specifically APA equipment module status valve position and key pressures, are used to verify that the APAs are cycling properly. Operation of the APA within these parameter values has been demonstrated to provide effective mixing of SWPF process vessels (see P-RPT-J-00008, *SWPF Test Report: Air Pulse Agitator Scale-up Validation*[43]).

The following assures functionality of equipment used for this SAC:

- BPCS software control (Section 5.5.5.2.15),
- Valve positions (Section 5.5.5.2.9), and
- PMVS header pressure instrument (Section 5.5.5.2.7).

#### 4.5.5.5 Controls (TSRs)

This SAC is implemented for AST-A (TK-101), FFT-A (TK-102), and SSRT (TK-104) through a LCO in the TSRs.

### 4.5.6 Tank Agitation Program – FFT-B (TK-222), MSTT (TK-224) (LCO 3.7.1)

#### 4.5.6.1 Safety Function

The safety function of this control is to frequently suspend the solids in the vessels while the vessel contains a sufficient volume of liquid with a significant solids concentration that could pose a potential trapped gas issue if the solids were allowed to settle and remain undisturbed for an extended period of time.

A significant amount of solids will be present in these vessels only during multi-strike operations in AFF.

This safety function is credited for AA event AFF Vessel Explosion.

#### 4.5.6.2 SAC Description

This SAC requires that the agitators in FFT-B (TK-222) and MSTT (TK-224) operate continuously for at least 1 hour each 2-day period while tank liquid volume is sufficient to contain the amount of solids capable of trapping enough $H_2$ that, if released, could cause the corresponding tank vapor space volume to exceed the CLFL.

The satisfactory completion of this control can be determined by monitoring the motor parameters for the agitator. This check can be done in real time, or by evaluating the most current available plant data history via the BPCS.

It is undesirable to require continuous operation of the AFF agitators because of competing concerns that arise due to use of bladed agitators. The FFT-B agitator has 3 sets of blades at different elevations along a common shaft. If the agitators are required to continuously rotate while the blades are partially submerged in the liquid (i.e., the liquid surface is passing the elevation of the blades), the resulting splashing will cause waste droplets to coat the upper surfaces within the tank. Over years, this could cause excessive buildup of salt and MST particles that would exacerbate any in-tank maintenance activities that may be needed.

The times to reach CLFL are at least 18 days for the MSTT and at least 21 days for the FFT-B (TK-222) based on a recirculation pump trip setpoint of 132 degrees Fahrenheit (see S-RPT-J-00011[33]). Because of the lengthy minimum times to reach CLFL in the applicable vessels (i.e., more than 18 days), there is no safety concern with allowing the agitators to be shut down as needed to avoid operational concerns, provided the minimum amount of agitation is performed within the required timeframe.

This control is a SAC because it is protecting an IC assumed in the AA (i.e., process vessels containing significant solids are normally well-mixed during processing). It is not credited with preventive nor mitigative functions. Therefore, no SSCs are required to be functionally classified as SS in order to support this SAC.

#### 4.5.6.3 Functional Requirements

FFT-B and MSTT agitators shall not be shut down for a period greater than 48 hours.

The status of the agitators shall be periodically confirmed by operators.

#### 4.5.6.4 SAC Evaluation

The actions of this SAC are considered to be routine tasks using normal operating procedures. There are no unique or complex aspects to this attribute, and no specialized operator training is required.

#### 4.5.6.5 Controls (TSRs)

This SAC is implemented for FFT-B (TK-222) and MSTT (TK-224) through a LCO in the TSRs.

### 4.5.7 Draining Slurried Solids from FFT-B (TK-222)/MSTT (TK-224) to Alpha Finishing Drain Tank (AFDT) (TK-228) (TSR Administrative Control 5.8.3.7)

#### 4.5.7.1 Safety Function

The safety function of this control is to prevent conditions in the AFDT (TK-228) that would result in the time to reach CLFL in the vessel becoming shorter than 10 days. This safety function is applicable to activities draining from the MSTT (TK-224) whenever it contains concentrated solids slurry. This safety function applies to activities draining from the FFT-B (TK-222) when it contains solids from seven AST-B (TK-221) batches concentrated into a tank volume of 2000 gallons or less.

This safety function is credited for the following DBA Events:

- AFF Process Vessel Explosion.

#### 4.5.7.2 SAC Description

Both the FFT-B (TK-222) and the MSTT (TK-224) are provided with multiple drain pathways where manual valves can be opened to drain the tank and/or associated process piping to the AFDT (TK-228). This draining activity is normally performed to support maintenance after the associated process piping has been flushed into the primary process vessels. The material normally drained to the AFDT (TK-228) to support maintenance typically has limited volume and only incidental solids content.

In order for conditions to exist in the AFDT (TK-228) that result in its time to reach CLFL dropping below 10 days, it is necessary to transfer almost half of the solids present in the FFT-B (TK-222) or MSTT (TK-224) under bounding conditions into the AFDT (TK-228), then fill the AFDT (TK-228) with liquid up to near its overflow. If less than this amount of solids are

transferred into the AFDT (TK-228), the time to CLFL will always be longer than 10 days. Based on the geometries of the source tank and receiving tank, it is not possible to exceed the limit on the amount of solids in the AFDT (TK-228) due to a mistransfer from the FFT-B (TK-222) unless the solids in FFT-B (TK-222) has been concentrated down below a level of 2000 gallons in the tank. At higher levels in the FFT-B (TK-222), the solids concentration is low enough such that even if the AFDT (TK-228) were filled to its overflow with that material, the time to reach CLFL in the AFDT (TK-228) following a loss of purge would be over 10 days. The MSTT (TK-224) receives concentrated solids from the FFT-B (TK-222). Therefore, anytime that the MSTT (TK-224) contains more than 200 gallons of solids slurry, the mistransfer of that material into the AFDT (TK-228) has the potential to reduce the time to CLFL in the AFDT (TK-228) to less than 10 days.

This control is a SAC because of the impracticality of automating the FFT-B and MSTT drains in a manner that would differentiate between drainage of solids slurry which is only allowed in limited volumes, and flush water or DSS which can be safely drained without a limit of volume.

There are no SSCs whose failure would result in losing the ability to complete the action required by the SAC. This item involves a determination prior to draining material that the volume and nature of the material is acceptable in the drain tank and is thus not time sensitive. If level instruments in the source or receipt tank were not available to support the determination, the draining activity can be delayed until the tank parameters can be determined and evaluated. Therefore, no SSCs are required to be functionally classified as SS in order to support this SAC.

#### 4.5.7.3 Functional Requirements

The volume of slurried solids drained from the FFT-B (TK-222) and MSTT (TK-224) to the AFDT (TK-228) shall be limited to 200 gallons. This limit applies to activities draining from the MSTT (TK-224) whenever it contains concentrated solids slurry. This limit applies to activities draining from the FFT-B (TK-222) when it contains solids from seven AST-B (TK-221) batches concentrated into a tank volume of 2000 gallons or less.

#### 4.5.7.4 SAC Evaluation

The actions of this SAC are considered to be routine tasks using normal operating procedures.

This item requires assuring that the volume of waste intended to be sent from the FFT-B (TK-222)/MSTT (TK-224) is acceptable for the AFDT (TK-228). The BPCS is reliable for this application in that it has a very high availability and there are indications available to indicate if the BPCS is not functioning. This item is a pre-transfer determination and is thus not time sensitive. Sending and receipt tank level instruments are ensured to be reliable by inclusion in the IPI program. The level instrument outputs are displayed via the BPCS. There are no unique or complex aspects to this attribute, and no operator training is required.

#### 4.5.7.5 Controls (TSRs)

This SAC is implemented through the Administrative Controls section of the TSRs.

### 4.5.8 Inter-Facility Transfer Control Program (TSR Administrative Control 5.8.3.6)

#### 4.5.8.1 Safety Function

The safety function of this control is to prevent and/or mitigate the consequences of an event initiated by a mistransfer or a spill/leak of material being transferred between SRS Liquid Waste facilities.

#### 4.5.8.2 SAC Description

The key attributes of the Inter-Facility Transfer Control Program that are classified as SACs are listed in the Subchapters below. Most of these items ensure that appropriate steps are taken by SWPF to terminate transfers when appropriate to prevent or mitigate releases from the transfer system. Other items ensure that critical transfer prerequisites are met, that transfers are appropriately monitored, and that adequate isolation is provided between SWPF tanks and the transfer lines of other Liquid Waste facilities when transfers are not in progress.

#### 4.5.8.3 Functional Requirements

An Inter-Facility Transfer Control Program shall be established governing radioactive waste transfers and the transfer of DSS. The attributes of the program that are classified as SACs are:

1. Prior to transfers to DWPF, confirm that either the receipt of the entire sending tank contents is acceptable to DWPF or the intended transfer volume entered into the SWPF BPCS is acceptable to DWPF.
2. Sound isolation (single leak tested valve, double valve isolation, or blank) of the SEHT (TK-205) and SSRT (TK-104) from the DWPF transfer lines is required when not transferring to DWPF. When sound isolation is not possible, notification shall be given to the DWPF Shift Manager/CR Manager of the potential for an unintended waste transfer and excavating activities shall be prohibited near the strip effluent and MST/sludge transfer lines within J-Area. This control does not apply to vent lines connected to the headspace of the SEHT (TK-205).
3. Transfers to DWPF shall be terminated when directed by the DWPF CR.
4. Strip effluent transfers to DWPF shall be terminated and sound isolation provided (single leak tested valve, double valve isolation, or blank) following:
   a) A seismic event,
   b) Notification of a Tornado watch, tornado warning, or high wind warning as issued by the SRS Operations Center (SRSOC), or
   c) Notification of a DWPF tornado/high wind event.
5. Provide sound isolation of the SEHT (TK-205) from DWPF's transfer line (single leak tested valve, double valve isolation, or blank) while draining the strip effluent transfer line to the

Low Point Pump Pit (LPPP). This control does not apply to vent lines connected to the headspace of the SEHT (TK-205).

6. Transfer procedures shall identify the functional equipment required to stop transfers of DSS out of SWPF, and to isolate SWPF from the Tank 50-to-Z Area inter-area line.
7. Transfers of DSS into Concentration, Storage, and Transfer Facility (CSTF) shall be terminated following a seismic event.
8. Transfers of DSS into CSTF shall be terminated following notification of the following:
   a) Tornado warning, tornado watch, or high wind warning as issued by the SRSOC,
   b) CSTF tornado/high wind event,
   c) Saltstone tornado/high wind event,
   d) CSTF wildland fire event, or
   e) CSTF CR abandonment event.

#### 4.5.8.4 SAC Evaluation

Liquid Waste transfers are routinely made between the various SRS Liquid Waste facilities. These transfers occur via fixed transfer paths and are not complex operations. Operating procedures appropriately govern the conduct of these Liquid Waste transfers. Transfers are monitored using pump indicators and liquid level indications present in both the sending and receiving facilities. Multiple, independent means are available to confirm that transfers are secured (e.g., BPCS liquid level monitoring, BPCS valve position indication, BPCS pump status indication, BPCS pump discharge flow/pressure indication). Implementing these SAC items provides assurance that the functional requirements will be performed correctly and consistently to ensure the stated safety function is maintained. Each of the SAC items of the program is evaluated below to identify compliance with principles important to the SAC requirements. SACs placed on an interfacing facility shall have the SAC justification in the facility Documented Safety Analysis (DSA) that requires the control.

Attribute 1 requires confirmation that the volume of waste intended to be sent from SWPF to DWPF is acceptable to the receipt facility. This supports DWPF personnel's ability to prevent overflows of pump tanks in the LPPP or of the Strip Effluent Feed Tank by verification of adequate freeboard space for the intended transfer volume prior to transferring from SWPF into DWPF. Typically, MST/sludge transfers out of the SSRT (TK-104) will be batch transfers of the entire tank contents, while strip effluent transfers out of the SEHT (TK-205) will be a fraction of the tank contents. However, batch transfers could be made from the SEHT (TK-205) and partial tank transfers could be made from the SSRT (TK-104). For either type transfer, the BPCS is reliable for this application in that it has a very high availability and there are indications available to indicate if the BPCS is not functioning. This attribute is a pre-transfer determination and is thus not time sensitive. Sending tank level instruments and transfer pump discharge flow instruments are ensured to be reliable by inclusion in the IPI program. The level instrument outputs and totalized transfer volume (derived from the pump discharge flow rate) are displayed

via the BPCS. Both the SEHT (TK-205) and the SSRT (TK-104) have redundant tank level instruments, so the failure of a single level instrument would not have the potential to prevent meeting the safety function of this control. Therefore, no SSCs need to be upgraded to SS to support this SAC. There are no unique or complex aspects to this attribute, and no operator training is required.

Attribute 2 requires that the SEHT (TK-205) and the SSRT (TK-104) be isolated from the DWPF transfer lines when not transferring to DWPF (i.e., after transfers to DWPF are terminated). The DWPF portion of the transfer lines starts at the seal plate just outside of the WTE. The mechanism of isolating the SEHT (TK-205) and the SSRT (TK-104) from the DWPF transfer lines will rely on BPCS control or manual positioning of valves. SWPF CR personnel may attempt to isolate the vessel from the DWPF transfer line using BPCS controls. If BPCS control fails to close the appropriate valves, the valves may be closed locally at the valve positioner. The BPCS is considered to be a reliable system adequate to perform the safety function of this SAC attribute. The BPCS provides feedback to operators conducting transfers by indication of valve position and liquid level readings. Independent verification will be performed to identify that the required valve alignment is achieved by verifying valve positions. No SS SSCs were identified as being necessary to perform the safety function of this SAC attribute. There are no unique or complex aspects to this attribute, and no specialized operator training is required.

Attribute 2 also requires that when sound isolation is not possible, notification shall be given to the DWPF Shift Manager/CR Manager and excavating activities shall be prohibited near the strip effluent and MST/sludge transfer lines within J-Area. The notification of DWPF personnel allows them to be aware of the increased potential for an inadvertent transfer between facilities. Prohibiting excavating activities near the affected transfer lines minimizes the likelihood that the transfer line will be damaged and leak while the line does not have sound isolation from source tanks.

Attributes 3, 4, 7, and 8, terminate transfers that originated from SWPF tanks and have various destinations in other Liquid Waste facilities. The transfers are terminated due to various causes, but the steps to terminate each transfer will be the same, independent of the cause. The mechanism of stopping the transfer will rely on BPCS control or manual deenergizing of the pump motor (e.g., at the Variable Frequency Drive (VFD) or a distribution breaker). SWPF CR personnel may attempt to stop the transfer using BPCS controls. If the BPCS control fails to terminate the transfer, the pump may be manually deenergized at the VFD panel or by opening a breaker. In the case of a tornado warning, deteriorating weather conditions may prevent qualified personnel from leaving a tornado shelter and stopping the pump at the VFD or breaker. If this occurs, then the termination of the transfer will rely on BPCS control to stop the transfer. The BPCS is considered to be a reliable system adequate to perform the safety function of this SAC attribute. The BPCS provides feedback to operators conducting transfers by indication of pump status, pump discharge flow rate, pump discharge pressure, and liquid level readings in the sending tank. Independent verification will be performed to identify that the transfer has been terminated by verifying that the correct pump has stopped. No SS SSCs were identified as being

necessary to perform the safety function of this SAC attribute. There are no unique or complex aspects to this attribute, and no specialized operator training is required.

Attribute 5 requires that the SEHT (TK-205) be isolated from DWPF's transfer line while draining the strip effluent transfer line to the LPPP. The DWPF portion of the transfer line starts at the seal plate just outside of the WTE. The mechanism of isolating the SEHT (TK-205) from the DWPF transfer line will rely on BPCS control or manual positioning of valves. SWPF CR personnel may attempt to isolate the SEHT (TK-205) from the DWPF transfer lines using BPCS controls. If BPCS control fails to close the appropriate valves, the valves may be closed locally at the valve positioner. The BPCS is considered to be a reliable system adequate to perform the safety function of this SAC attribute. The BPCS provides feedback to operators by indication of valve position and liquid level readings in the SEHT (TK-205). Constant level in the SEHT (TK-205) would indicate no inadvertent transfer from the tank was occurring during the draining activity. Independent verification will be performed to identify that the required valve alignment is achieved by verifying valve positions. No SS SSCs were identified as being necessary to perform the safety function of this SAC attribute. There are no unique or complex aspects to this attribute, and no specialized operator training is required.

Attribute 6 requires that transfer procedures identify the functional equipment required to stop transfers of DSS out of SWPF, and to isolate SWPF from the Tank 50-to-Z Area inter-area line. All facility operations, including waste transfers, are conducted using written operating procedures. The format and content of these typical procedures includes standard locations to provide this type of information to the operator. The procedure development and review process includes the checks necessary to ensure that the identification of the functional equipment required to stop transfers is correct. No SS SSCs were identified as being necessary to perform the safety function of this SAC attribute. There are no unique or complex aspects to this attribute, and no specialized operator training is required.

#### 4.5.8.5 Controls (TSRs)

This SAC is implemented through the Administrative Controls section of the TSRs.

### 4.5.9 Seismic Event Response (TSR Administrative Control 5.8.3.8)

#### 4.5.9.1 Safety Function

The safety function of this control is to stop all process pumps and APAs following a seismic event.

This safety function is credited for the following DBA Events:

- Seismic Event.

#### 4.5.9.2 SAC Description

Process pumps for many process vessels are provided with recirculation paths back to the vessel. Continued recirculation of a vessel's contents via the process pump or operation of APAs in a vessel following a loss of cooling could cause a vessel to heat up at an appreciable rate due to the mechanical work being done on the vessel fluid by the pump or APA. The increase in vessel temperature is assumed to result in an increase in the flammable organic vapors present in the vessel headspace due to the potential presence of a floating solvent layer.

Stopping the process pumps and APAs are actions normally performed via the BPCS. In the event that BPCS is not available alternate steps can be taken to stop the process pumps and APAs. The pumps could be stopped locally at the VFDs, as well as by opening appropriate MCC breakers. The APAs can be stopped by locally closing key actuated or manual valves on the air supply and discharge paths to the APAs. If normal methods of shutting down the process pumps and APAs are ineffective or are not available, it is possible to complete this action by opening the 13.8 kV disconnects supplying electrical power to the facility.

The process pumps that are subject to the actions of this SAC are listed below.

| | | | |
|---|---|---|---|
| P-101A/B | P-202A/B | P-220A/B | SP-101 |
| P-102-1A/B/C | P-204A/B | P-221A/B | SP-102 |
| P-102-2A/B/C | P-205A/B | P-222-1A/B/C | SP-103 |
| P-104-1 | P-206A/B | P-222-2A/B/C | SP-104 |
| P-104-2 | P-207A/B | P-224 | SP-105 |
| P-105A/B | P-208A/B | P-228 | SP-109 |
| P-109A/B | P-215A/B | P-601A/B | SP-205 |
| | P-217A/B | | SP-235 |

There are no SSCs whose failure would result in losing the ability to complete the action required by the SAC. This is because of the various means available to perform the actions. Therefore, no SSCs are required to be functionally classified as SS in order to support this SAC.

#### 4.5.9.3 Functional Requirements

Following a seismic event, all process pumps and APAs shall be stopped immediately.

#### 4.5.9.4 SAC Evaluation

The actions of this SAC are considered to be routine tasks using emergency operating procedures.

This item requires stopping the process pumps and APAs following a seismic event. Stopping the process pumps and the APAs are actions normally performed via the BPCS. In the event that BPCS is not available alternate steps can be taken to stop the process pumps. The pumps could be stopped locally at the VFDs, as well as by opening appropriate MCC breakers. The APAs can be stopped by locally closing key actuated or manual valves on the air supply and discharge

paths to the APAs. If normal methods of shutting down the process pumps and APAs are ineffective or are not available, it is possible to complete this action by opening the 13.8 kV disconnects supplying electrical power to the facility.

The BPCS is reliable for this application in that it has a very high availability and there are indications available to indicate if the BPCS is not functioning. This item should be completed within two hours, which is considerably longer than the nominal time needed to complete the action and it is thus not considered time sensitive. The most time-consuming method for shutting down the pumps would be by opening fifty-two individual breakers on the MCCs, but this would take significantly less than two hours because the MCCs are grouped in three locations within the facility. So little time is spent in moving from one breaker to the next. There are no unique or complex aspects to this attribute, and no specialized operator training is required.

#### 4.5.9.5 Controls (TSRs)

This SAC is implemented through the Administrative Controls section of the TSRs.

### 4.5.10 High Temperature in the FFT-A (TK-102) or SSRT (TK-104) (TSR Administrative Control 5.8.3.9)

#### 4.5.10.1 Safety Function

The safety function of this control is to stop the operation of the filter feed pumps, sample pumps, and the APAs for a vessel when the vessel temperature reaches the High Temperature Interlock setpoint for the filter recirculation pumps. Stopping operation of this additional equipment prevents the tank heating up to the point (under assumed adiabatic conditions) that could result in the time to reach CLFL in the vessel becoming shorter than 10 days.

This safety function is credited for the following DBA Events:

- ASP Vessel Explosion.

#### 4.5.10.2 SAC Description

The FFT-A (TK-102) and SSRT (TK-104) are provided with SS interlocks that stop the filter recirculation pumps when the vessel temperature reaches the interlock setpoint. Stopping these relatively large pumps results in a dramatic drop in the rate of potential vessel temperature increases under a loss of cooling condition. Actuation of the SS interlock for the filter recirculation pumps is displayed in the CR on ANN-001 of the SIS.

Although the major heat input to the vessel is addressed by the SS interlock, other pumps and APAs may continue to operate and could cause sufficient vessel heating under assumed adiabatic conditions to decrease the time to reach CLFL after a loss of purge to less than 10 days. Stopping the filter feed pumps and the APAs within an hour after reaching the SS interlock setpoint will stop this additional heat input to the vessel, and will result in a time to reach CLFL of greater

than 10 days, even under adiabatic conditions. Stopping the filter feed pumps and the APAs are actions normally performed via the BPCS.

In the event that BPCS is not available alternate steps can be taken to stop the filter feed pumps and the APAs. The filter feed pumps could be stopped locally at the VFDs, as well as by opening appropriate MCC breakers. The APAs can be stopped by locally closing key actuated or manual valves on the air supply and discharge paths to the APAs. If normal methods of shutting down the filter feed pumps and APAs are ineffective or are not available, it is possible to complete this action by opening the 13.8 kV disconnects supplying electrical power to the facility.

There are no SSCs whose failure would result in losing the ability to complete the action required by the SAC. This is because of the various means available to perform the actions. Also, multiple indications are available of system temperatures while recirculating the filter loops. These include a pair of tank temperature transmitters and a temperature output from the mass flow meter at the discharge of each filter recirculation pump. So multiple non-SS alarms received on the BPCS would alert the operators to excessive system temperatures. Therefore, no SSCs are required to be functionally classified as SS in order to support this SAC.

#### 4.5.10.3 Functional Requirements

Following an indication that a High Temperature Interlock has actuated or the temperature exceeds the interlock setpoint for the FFT-A (TK-102) or SSRT (TK-104), the filter feed pumps, sample pumps, and the APAs in the affected tank shall be stopped immediately.

#### 4.5.10.4 SAC Evaluation

The actions of this SAC are considered to be routine tasks using normal operating procedures and alarm response procedures.

The operator is alerted to the high temperature condition in the process vessel by an alarm in the CR received via the SIS. The temperature sensor, transmitter, and SIS logic solver are functionally classified as SS for the purposes of providing the interlock for the filter recirculation pumps. Therefore, these components are highly reliable.

This item requires stopping the filter feed pumps, sample pumps, and APAs after a High Temperature Interlock has actuated in a tank. Stopping the filter feed pumps, sample pumps, and the APAs are actions normally performed via the BPCS. In the event that BPCS is not available alternate steps can be taken to stop the filter feed pumps and the APAs. The filter feed pumps and sample pumps could be stopped locally at the VFDs, as well as by opening appropriate MCC breakers. The APAs can be stopped by locally closing key actuated or manual valves on the air supply and discharge paths to the APAs. If normal methods of shutting down the filter feed pumps and APAs are ineffective or are not available, it is possible to complete this action by opening the 13.8 kV disconnects supplying electrical power to the facility.

The BPCS is reliable for this application in that it has a very high availability and there are indications available to indicate if the BPCS is not functioning. This item should be completed

within one hour, which is several times longer than the nominal time needed to complete the action and it is thus not considered time sensitive. Sending and receipt tank level instruments are ensured to be reliable by inclusion in the IPI program. The level instrument outputs are displayed via the BPCS. There are no unique or complex aspects to this attribute, and no operator training is required.

#### 4.5.10.5 Controls (TSRs)

This SAC is implemented through the Administrative Controls section of the TSRs.

### 4.5.11 Process Piping Line Drain/Flush (TSR Administrative Control 5.8.3.10)

#### 4.5.11.1 Safety Function

The safety function of this control is to flush and drain process piping and components as necessary to remove or dilute potentially hazardous process fluids prior to entry into areas with increased ionizing radiation and/or prior to performing maintenance that opens the system's pressure boundary. These areas include CSSX, P&VG, and Analytical Laboratory Hot Cell locations.

This safety function is credited in the HA as AC-5.a for the following event categories:

- Direct Exposure,
- Loss of Confinement, and
- Fire.

#### 4.5.11.2 SAC Description

SWPF is designed with a means to drain and flush process piping and components as necessary to support maintenance. The flush and drain process is implemented through the operation of the BPCS through preprogrammed sequences initiated by the Control Operator. Flushing of solids-bearing systems are automated in the BPCS sequences for completion or shutdown of routine activities (e.g., transferring out of ASP tanks, operating cross-flow filter loops). Flushing of process systems that don't contain solids typically involves operation of manual flush valves located in P&VG corridors. Most of CSSX piping is placed in a safe condition during a normal shutdown of the CSSX process by switching the suction of the salt solution feed pumps from the SSFT (TK-109) to the DSSHT (TK-207), causing a dilution of the Cs-137 present in the CSS stream, solvent stream, and strip effluent stream.

After process piping and components in a given area are flushed/drained, a survey of radiological conditions in the area are performed prior to allowing access by Operations/Maintenance into the area to perform work. The flush and drain process is referenced in the appropriate operations/maintenance procedures as well as in the BPCS operating procedure. Operations/maintenance procedures call out when the flush and drain is necessary together with the interface of the Radiation Protection Program.

This control is a SAC because of the impracticality of automating a flushing and drain system capable of detecting the presence of radioactive material within process piping and determining the extent of flushing and draining necessary to remove the hazard.

There are no SSCs whose failure would result in losing the ability to complete the action required by the SAC. This item involves a determination prior to authorizing access that sufficient draining/flushing has been completed to remove or reduce the hazard, and is thus not time sensitive. If draining/flushing cannot be performed, access can be delayed until the draining/flushing can be completed and the radiological survey performed. Therefore, no SSCs are required to be functionally classified as SS in order to support this SAC.

#### 4.5.11.3 Functional Requirements

As specifically identified in the relevant operation/maintenance procedures, process systems in CSSX, P&VG, and Analytical Laboratory Hot Cell areas with increased ionizing radiation from the process stream shall be drained and flushed prior to entry into the areas and/or prior to performing maintenance that opens the system's pressure boundary. Liquid in process components that contains low concentrations of radioactive material (e.g., solvent in the SHT (TK-202), CSSX caustic wash material, and DSS) is not required to be drained. The Radiation Protection Program verifies that the post-flush radiological conditions in the area are acceptable.

#### 4.5.11.4 SAC Evaluation

The actions of this SAC are considered to be routine tasks using normal operating/maintenance procedures.

This item requires assuring that flushing/draining activities are performed prior to entry into areas with increased ionizing radiation from the process stream and/or prior to opening the pressure boundary of specified systems. The BPCS is normally used to perform flushing/draining of process systems and the BPCS provides feedback to operators conducting draining/flushing by indication of valve position and liquid level readings (e.g., receipt tank for flush/drain). The BPCS is reliable for this application in that it has a very high availability and there are indications available to indicate if the BPCS is not functioning. Flush water flow instruments and level instruments in tanks receiving the material being flushed/drained are ensured to be reliable by inclusion in the IPI program. The flow instrument and level instrument outputs are displayed via the BPCS. There are no unique or complex aspects to this attribute, and no specialized operator training is required.

The flush and drain process is referenced in the appropriate Operations/Maintenance procedures as well as in the BPCS operating procedure. The Control Operator ensures that the given process system has been flushed and drained. Prior to entry into or performing maintenance on a process system, the Radiation Protection Program requires verification that the radiological levels are acceptable.

#### 4.5.11.5 Controls (TSRs)

This SAC is implemented through the Administrative Controls section of the TSRs.

### 4.5.12 Access Control (TSR Administrative Control 5.8.3.11)

#### 4.5.12.1 Safety Function

The safety function of this control is to restrict personnel entry into plant areas that are unoccupied during normal process operations until potential hazards in the area are removed/controlled and an initial survey of radiological conditions in the area is performed.

This safety function is credited in the HA as AC-1 for the following event categories:

- Direct Exposure,
- Loss of Confinement,
- Fire, and
- NPH.

This safety function is credited for the following DBA Events:

- Seismic Event.

#### 4.5.12.2 SAC Description

SWPF is designed to provide a means of limiting personnel access to facility areas that may present significant personnel hazards. Personnel access is typically restricted via locked doors that are maintained under key control. Permission to access these areas is granted by the Control Room staff after any potentially hazardous processes are shut down within the area and the process systems are drained/flushed as necessary to support personnel entry into the area.

This control is a SAC because of the impracticality of automating an access control system that would be capable of determining the radiological conditions within a given plant area and restricting personnel access while hazards remain present.

There are no SSCs whose failure would result in losing the ability to complete the action required by the SAC. If the normal door lock were to become non-functional, alternate means can be used to secure the doors and restrict entry. Therefore, no SSCs are required to be functionally classified as SS in order to support this SAC.

#### 4.5.12.3 Functional Requirements

Personnel access shall be restricted into the areas listed below during normal operations following initial commencement of radioactive operations. These areas are:

- CSSX Contactor Operating Deck and Contactor Support Floor Area;
- West CSSX Tank Cell;
- Hot Cells;
- Glovebox 8 & 9;
- South Chases (i.e., South Utility Chase and Contactor Support Floor Chase); and
- CPA P&VG Labyrinths (i.e., Sample, CSSX, and ASP).

Personnel access shall also be restricted into the Process Vessel area of AFF after a seismic event.

Normal operating/maintenance procedures shall contain appropriate guidance to ensure that potential hazards in an area are removed/controlled before the area is entered. An initial survey of radiological conditions in the area shall be performed before personnel perform work activities.

The CSSX Contactor Operating Deck, West CSSX Tank Cell, and P&VG Labyrinths will be maintained as exclusion areas by physical controls (e.g., locked door/hatch). The physical controls used to meet the requirements of this program may be the same as the physical controls used to meet the Radiological Protection Program requirements for locked entries to High Radiation Areas.

The limitation on personnel access to Glovebox 8 & 9 applies to any part of the body that breaks the plane of the glovebox boundary and is not protected by a feature of the glovebox (e.g., glove).

#### 4.5.12.4 SAC Evaluation

The actions of this SAC are considered to be routine tasks using normal operating procedures.

This item requires restricting personnel entry into facility areas of concern. During normal operations, this is typically done with locked doors and controlled keys. Standard administrative methods of key control under the Conduct of Operations program are adequate for the purposes of this SAC. A survey of radiological conditions in the area are performed prior to allowing access by Operations/Maintenance into the area to perform work. Standard Radiological Protection practices are applicable to the portable instrumentation used to perform the surveys. No process instrumentation is necessary to support this SAC.

Restricting access to the AFF following a seismic event is done with announcements and postings. There is no requirement to physically lock doors associated with the AFF.

There are no unique or complex aspects to this control, and no operator training is required.

#### 4.5.12.5 Controls (TSRs)

This SAC is implemented through the Administrative Controls section of the TSRs.

### 4.5.13 Isolating APAs from the Plant Air System (TSR Administrative Control 5.8.3.12)

#### 4.5.13.1 Safety Function

The safety function of this control is to isolate the APAs in the FFT-A (TK-102), SSRT (TK-104), WWHT (TK-105), and SSFT (TK-109) from the Plant Air System's compressed air supply following loss of vacuum in the PVVS header.

This safety function is credited in the HA as AC-5.b for the following event categories:

- Loss of Confinement.

This safety function is credited for the following DBA Events:

- APA Aerosolization.

#### 4.5.13.2 SAC Description

At high liquid levels in the process vessels, the APAs in the vessels provide mixing by alternating the alignment of each pulse pot in the vessel between the PMVS header and the APA charge tank. The PMVS operates at a nominal vacuum of 36 in water. Since the PMVS vacuum is greater than the vacuum in the vessel headspace maintained by PVVS, the liquid level in the pulse pot is raised above the liquid level in the vessel. The APA charge tank is supplied from the Plant Air System and is kept at a positive pressure by a Pressure Control Valve upstream of the charge tank inlet. Aligning the pulse pot to the APA charge tank causes the pulse pot to pressurize, forcing the liquid column in the pulse pot to discharge into the bottom of the vessel via the APA nozzle. The BPCS controls the APAs parameters to prevent the discharge of air into the vessel via the APA nozzle during normal operations. Each vessel contains multiple pulse pots with individual 3-way valves to align each pulse pot to either the supply header or the PMVS header. The 3-way valves are controlled by the BPCS to sequentially pressurize the pulse pots. A single pulse pot is pressurized at a time, while the other pulse pots are aligned to the PMVS header.

If a 3-way valve sticks open while the APA is in Lift/Pulse mode, pressurized air will be continuously supplied to the pulse pot until its associated block valve is shut or valves in the air supply line are shut. After the liquid in the pulse pot has all been discharged air will exit the pulse pot and mix with the tank contents. The air rising through the liquid waste in the vessel will entrain droplets as the air enters the tank headspace, causing an airborne release of radiological material as the tank headspace pressurizes. Each vessel with APAs is connected to the PVVS via 4-inch diameter riser pipes. The increase in the amount of air passing from the vessel into the PVVS will result in a decrease in the PVVS header vacuum. The PVVS header vacuum is monitored by a Safety-Significant pressure transmitter that provides input into the SIS

and will result in a low pressure alarm in the CR when the alarm setpoint is reached. Additional indications are available in the CR that an APA is air-sparging the contents of a tank, including a BPCS alarm on low dP between the tank and its surrounding cell.

Isolating the APAs from the Plant Air System's compressed air supply can be performed at any one of multiple points in the system, including:

- Closing the pulse pot block valves between the 3-way valves and the pulse pots (4-7 per vessel depending on the number of pulse pots, 23 total for the four vessels)
- Closing the compressed air isolation valve between the APA charge tanks and the 3-way valves (1 per vessel, 4 total for the four vessels)
- Closing the pressure control valve upstream of the APA charge tanks (1 per vessel, 4 total for the four vessels)
- Closing one or more manual valves at key points in the air supply path.

Upon isolating the pressurized air supply to the pulse pots, the pulse pot with the stuck valve will depressurize and air flow from the pulse pot through the waste in the vessel will stop, terminating the airborne release.

There are no SSCs whose failure would result in losing the ability to complete the action required by the SAC. This is because of the various means available to perform the actions. Also, multiple indications are available that an APA is air-sparging the waste in a process vessel and the actions of this SAC need to be initiated. Therefore, no SSCs are required to be functionally classified as SS in order to support this SAC.

#### 4.5.13.3 Functional Requirements

The APAs in the FFT-A (TK-102), SSRT (TK-104), WWHT (TK-105), and SSFT (TK-109) shall be immediately isolated from the Plant Air System upon indication that the PVVS header vacuum has decreased below the SIS alarm setpoint.

#### 4.5.13.4 SAC Evaluation

The actions of this SAC are considered to be routine tasks using normal operating procedures.

The primary indication of a loss of PVVS header vacuum is a Safety Significant alarm received on the SIS annunciator panel in the CR. The alarm setpoint is set slightly below the normal range of system vacuum. If PVVS header vacuum was lost, multiple other indications would be available via the BPCS, including low vacuum alarms in the major process vessels.

The vessels containing APAs are connected to the PVVS header via 4-inch risers. The PVVS fans have a nominal capacity of 350 cubic feet per minute. Pressurized air supplied to the APAs is normally exhausted via the PMVS that has a nominal capacity of 2,000 cubic feet per minute. In the event that an APA valve sticks open and continuously supplies air to a pulse pot, the pulse

pot will discharge air to the bottom of the vessel. The discharged air will rise through the liquid and enter the tank headspace, from where it will be discharged via the PVVS. After tank vacuum is lost a small amount of air will escape into the surrounding cell via the PVVS orifice (1/4-inch diameter). Because virtually all the air involved with the aerosolization event will exit the vessel via the PVVS, the PVVS fans will be overwhelmed and will not be able to maintain normal vacuum in the header. Therefore the APA aerosolization event will result in a PVVS header low vacuum alarm.

The mechanism of isolating the APAs from the Plant Air supply will rely on BPCS control or manual positioning of valves. CR personnel may attempt to isolate APAs from the Plant Air supply using BPCS controls. If BPCS control fails to close the appropriate valves the valves may be closed locally at the valve positioner or manual valves in the flow path may be closed. The BPCS is considered to be a reliable system adequate to perform the safety function of this SAC attribute. The BPCS provides feedback to operators by indication of valve position as well as the vacuum in the headspace of individual tanks and the vacuum in the PVVS header. Recovering vacuum in the affected tank or the PVVS header indicates that the aerosolization event via the APAs has been terminated. Independent verification will be performed to identify that the required valve alignment is achieved by verifying valve positions. Because there are multiple means of detecting the loss of PVVS header vacuum and multiple means of isolating the APAs from the Plant Air supply, no SS SSCs were identified as being necessary to perform the safety function of this SAC attribute. There are no unique or complex aspects to this attribute, and no specialized operator training is required.

#### 4.5.13.5 Controls (TSRs)

This SAC is implemented through the Administrative Controls section of the TSRs.

## 4.6 Figures

**Figure 4.6-1. Safety Significant PC-3 Primary Confinement Boundary for Liquid Waste**

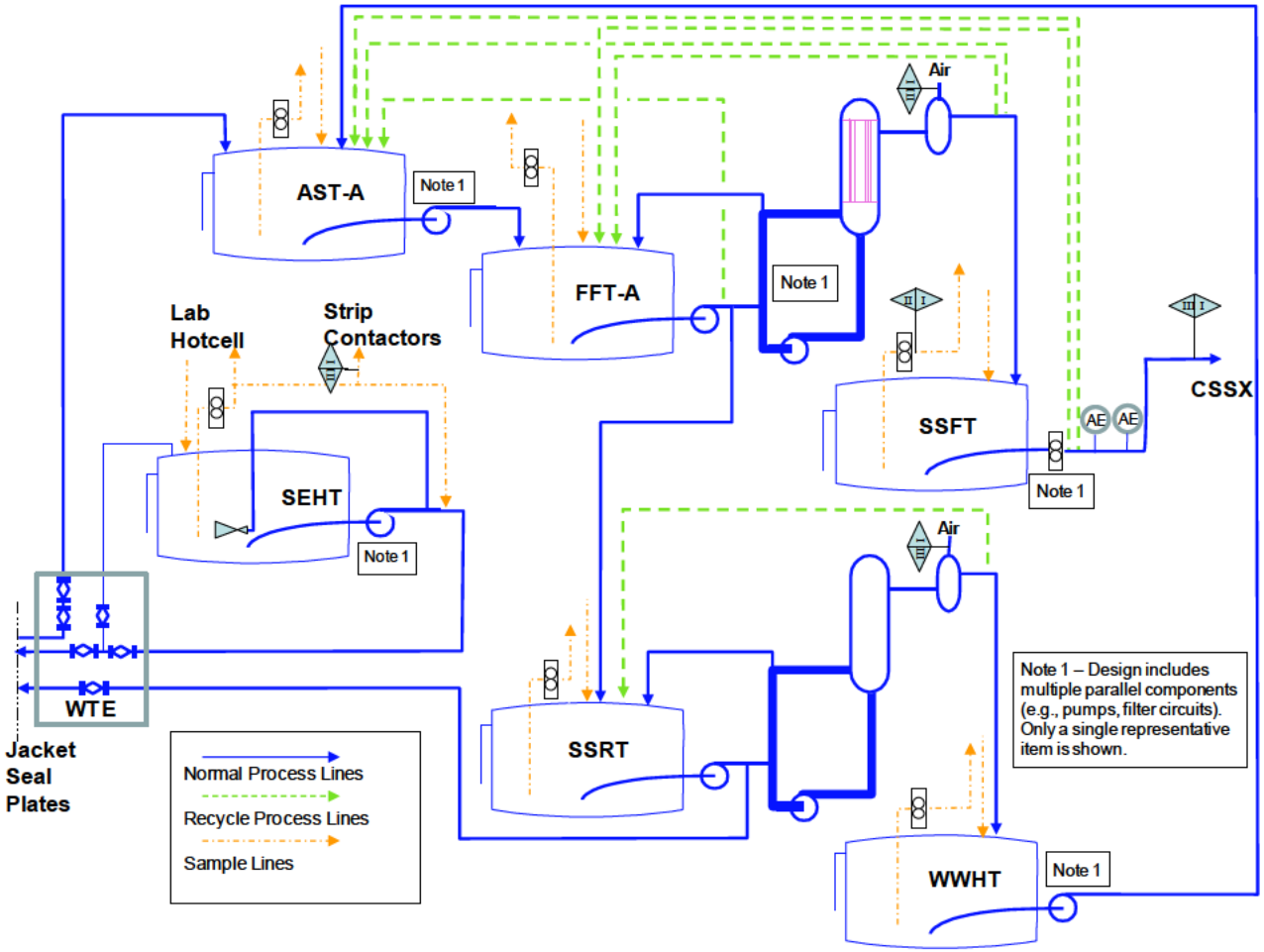

**Figure 4.6-2. Simplified Diagram of Air Dilution System and Process Vessel Ventilation System**

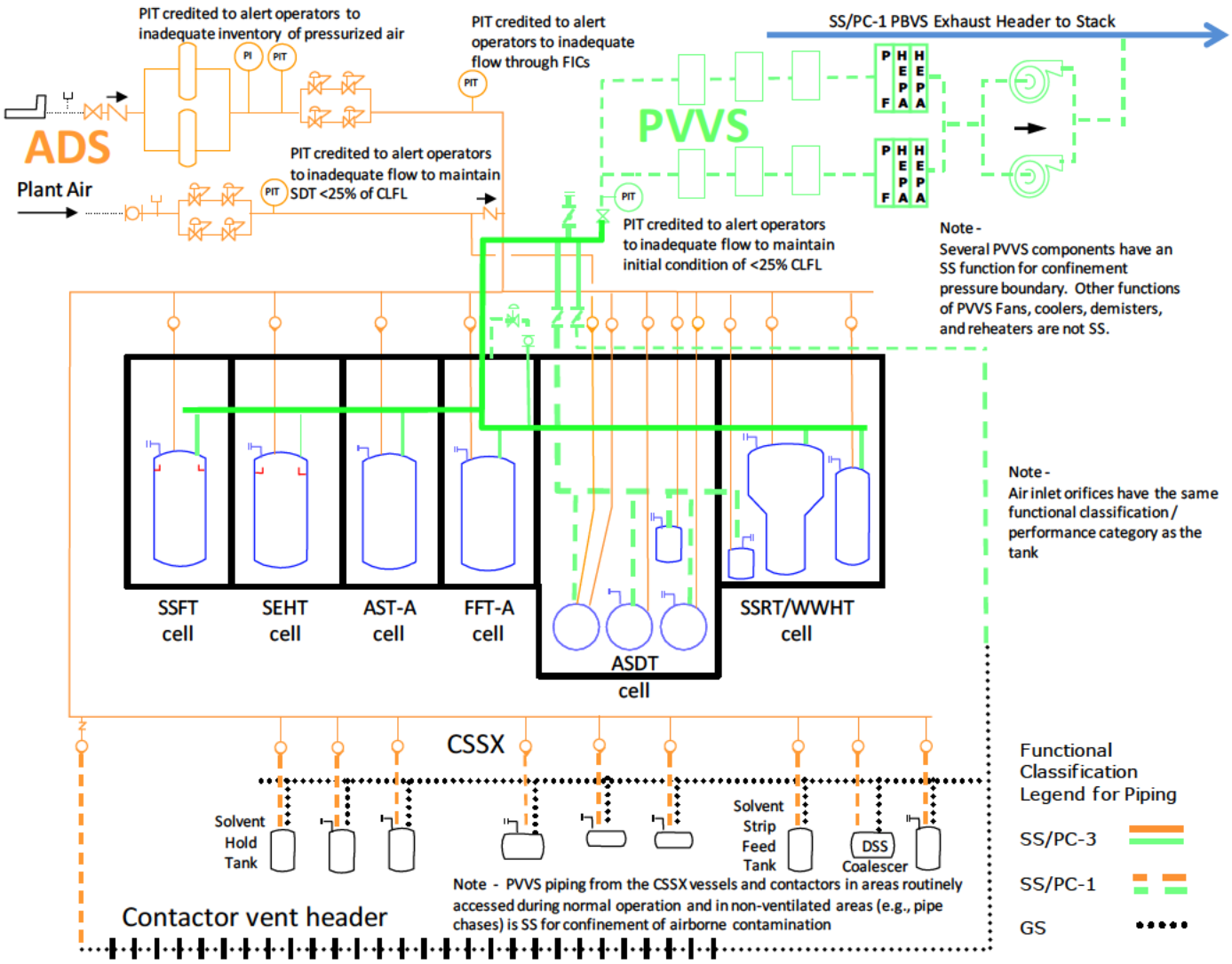

**Figure 4.6-3. Simplified Diagram of Analytical Laboratory Ventilation System Credited Components and Relationship to Process Building Ventilation System**

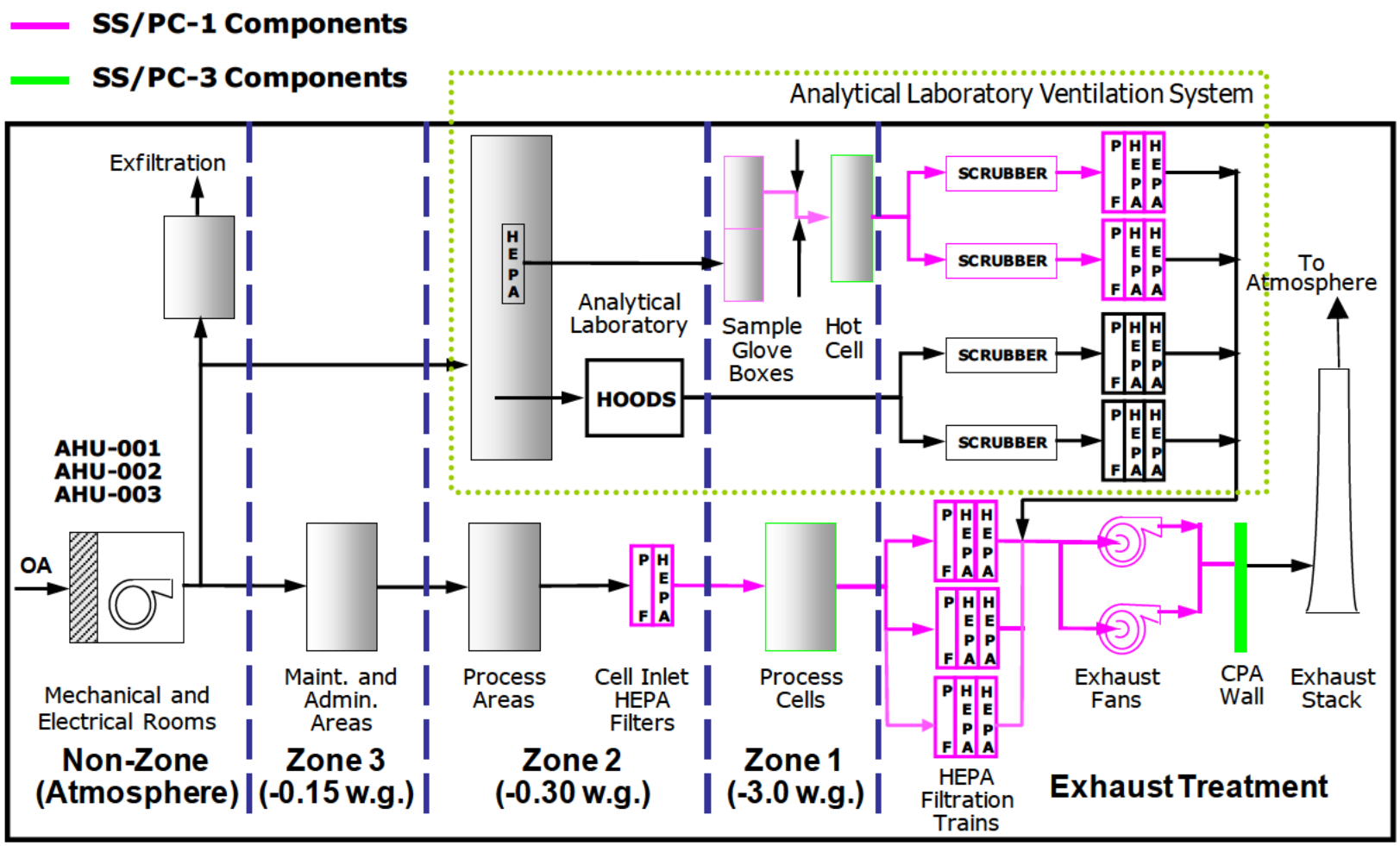

**Figure 4.6-4. TMR Architecture of the Tricon PLC System**

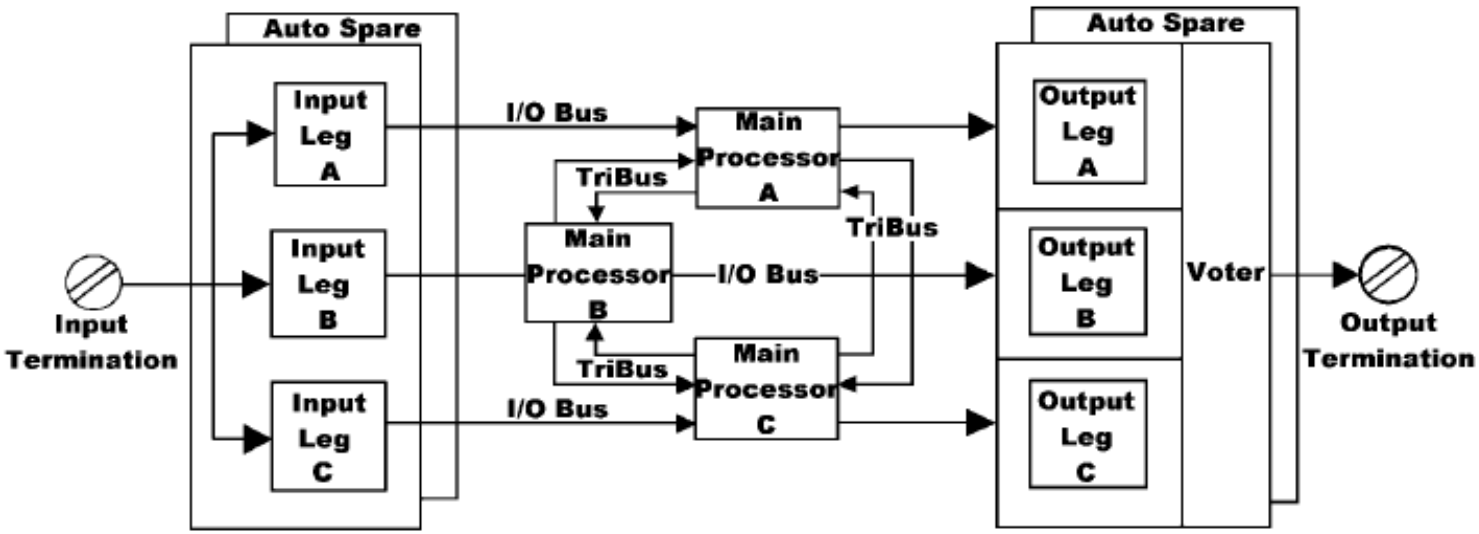

## 4.7 Tables

**Table 4.7-1. Safety Significant Structures, Systems, and Components**

| Functional Class | Chapter 4 SS SSC | Chapter 3 Accident Reference | Safety Function | Functional Requirement | TSR Coverage |
|---|---|---|---|---|---|
| SS | Subchapter: 4.4.1<br>Process Vessels, Tanks and Cross-Flow Filters: Structural (Confinement) | EC-17<br>HA – Fire<br>HA – NPH<br>EC-17<br>AA – Seismic<br>AA - Process Cell Fire<br>IC-5<br>AA - APA Aerosolization,<br>AA - ASP Vessel Explosion<br>AA - AFF Vessel Explosion | The primary function of process vessels and other components is to confine liquid waste. This prevents leaks and limits the exposure to onsite personnel.<br>Solids are excluded from waste in the SSFT (TK-109) and WWHT (TK-105).<br>ASP and AFF CFF sintered metal tubes act as a barrier for the solids in filter loops passing to the shell side of the filter in the Criticality analysis of Chapter 6. | • Waste is confined.<br>• AST-A (TK-101), FFT-A (TK-102), SSRT (TK-104), SSFT (TK-109), WWHT (TK-105), SEHT (TK-205), Lab Drain Tank (TK-235), ASP backpulse tanks, and CFF housings are designed to satisfy PC-3 seismic requirements.<br>• Solvent Drain Tank (TK-208), ASDT (TK-601), CSDT-A (TK-103), and SAST (TK-127) are designed to satisfy PC-1 seismic requirements.<br>• ASP and AFF CFF sintered metal tubes act as a barrier for the solids in filter loops.<br>• The ASP and AFF CFF sintered metal tubes are designed to satisfy PC-1 seismic requirements. | Design Feature |

**Table 4.7-1. Safety Significant Structures, Systems, and Components (cont.)**

| Functional Class | Chapter 4 SS SSC | Chapter 3 Accident Reference | Safety Function | Functional Requirement | TSR Coverage |
|---|---|---|---|---|---|
| SS | Subchapter 4.4.2<br>Process Vessels: Overflow Lines | EC-18<br>AA - Seismic: | The overflow lines for Solvent Drain Tank (TK-208) and ASDT (TK-601) provide flow path to ensure draining of the P&VGs, CSSX Contactor Operating Deck and Contactor Support Floor Area, and CSSX Tank Cell.<br>The overflow line for Lab Drain Tank (TK-235) provide flow path to ensure draining of the Laboratory Hot Cells and AFF gloveboxes.<br>The overflow lines for the AST-A (TK-101), SSRT (TK-104), WWHT (TK-105), and Lab Drain Tank (TK-235) direct liquid overflowing the vessels to the cell sump, preventing elevated spills and limiting the overflow volume that could splash and aerosolize in the sump. | • The overflow lines for Solvent Drain Tank (TK-208) and ASDT (TK-601) provide flow path are sized to ensure draining of the P&VGs, CSSX Contactor Operating Deck and Contactor Support Floor Area, and CSSX Tank Cells.<br>• The overflow line for the Lab Drain Tank (TK-235) provides a flow path to the ASDT Cell.<br>• The overflow lines for the AST-A (TK-101), SSRT (TK-104), WWHT (TK-105), and Lab Drain Tank (TK-235) end within the sump of their respective cells.<br>• The overflow lines for AST-A (TK-101), SSRT (TK-104), WWHT (TK-105), Lab Drain Tank (TK-235), Solvent Drain Tank (TK-208), and ASDT (TK-601) are designed to satisfy PC-3 seismic requirements. | Design Feature |

**Table 4.7-1. Safety Significant Structures, Systems, and Components (cont.)**

| Functional Class | Chapter 4 SS SSC | Chapter 3 Accident Reference | Safety Function | Functional Requirement | TSR Coverage |
|---|---|---|---|---|---|
| SS | Subchapter:<br>4.4.3<br>Process Vessel Grounding – Central Processing Area | EC-7<br>HA – Fire (deflagration)<br>HA – Explosion<br>EC-7<br>AA - Process Cell Fire,<br>AA - ASP Vessel Explosion,<br>AA - Seismic | The process vessels in cells and equipment enclosures within the CPA are grounded in accordance with NFPA 30[12] to reduce the potential for a spark from a static discharge and minimize the possibility of explosions and/or fires. | • DSS Coalescer (TK-201) and Process vessels contained in cells (East/West CSSX Tank Cells, AST-A, FFT-A, SSRT/WWHT, SSFT, ASDT, and SEHT Cells) are appropriately grounded to prevent static generation of a spark as an ignition source.<br>• Grounding of vessels within the Process Cells (AST-A, FFT-A, SSRT/WWHT, SSFT, ASDT, and SEHT Cells) are required to remain connected after the seismic event and are designed to satisfy PC-3 seismic requirements. | Design Feature |

**Table 4.7-1. Safety Significant Structures, Systems, and Components (cont.)**

| Functional Class | Chapter 4 SS SSC | Chapter 3 Accident Reference | Safety Function | Functional Requirement | TSR Coverage |
|---|---|---|---|---|---|
| SS | Subchapter:<br>4.4.4<br>Waste Piping | EC-12<br>HA – Direct Exposure<br>HA - Loss of Confinement<br>HA – NPH (PC-3 only)<br>EC-17<br>HA – Fire<br>HA – NPH (PC-3 only)<br><br>EC-14<br>HA – Fire<br>HA – Explosion<br>HA – Direct Exposure<br>HA - Loss of Confinement<br>HA – NPH (PC-3 only)<br><br>EC-17<br>AA - Process Cell Fire<br>EC-17, EC-12 , EC-14<br>AA - Seismic | Waste piping prevents the release of radioactive material by confining the liquid waste. | • The SS waste piping within defined boundary (including flanged connections and pump seals and housing as pressure boundary in the P&VGs) confines waste.<br>• The seismic subset of SS waste piping (including flanged-connections and pump seals and housing as pressure boundary in the P&VGs) confines waste during a seismic event and is designed to satisfy PC-3 seismic requirements. | Design Feature |

**Table 4.7-1. Safety Significant Structures, Systems, and Components (cont.)**

| Functional Class | Chapter 4 SS SSC | Chapter 3 Accident Reference | Safety Function | Functional Requirement | TSR Coverage |
|---|---|---|---|---|---|
| SS | Subchapter:<br>4.4.5<br>Process Building: | IC-4<br>AA -Process Cell Fire<br>AA - Seismic | The CPA structure directly supports the primary vessels and piping that serve as the primary confinement barrier for a seismic event and therefore, required to be designed to the same seismic standard as the primary confinement (PC-3).<br>The CPA structure protects the primary confinement components from direct exposure to PC-3 high winds or tornado missiles.<br>The CPA walls and ceiling surrounding the WTE and Process Vessel Cells act as a fire barrier for internal and external fires. | • Maintain structural integrity of essential areas identified in Subchapter 3.4.2.5 in the seismic event PC-3 (including II/I consideration).<br>• Provide a structural boundary capable of withstanding a PC-3 High Wind and PC-3 Tornado event for the essential areas identified in Subchapter 2.4.1.<br>• Provide a fire wall for internal and external fires for the WTE and Process Vessel Cells. | Design Feature |

**Table 4.7-1. Safety Significant Structures, Systems, and Components (cont.)**

| Functional Class | Chapter 4 SS SSC | Chapter 3 Accident Reference | Safety Function | Functional Requirement | TSR Coverage |
|---|---|---|---|---|---|
| SS | Subchapter:<br>4.4.6<br>Process Building Control Room, Cells, Enclosures, P&VGs and Pipe Chases | EC-4<br>HA – NPH<br>IC-1<br>AA - Process Cell Fire<br>AA - APA Aerosolization<br>AA - ASP Vessel Explosion<br>AA - Seismic Event<br>EC-4<br>AA - Seismic Event | Credited cells, enclosures, P&VGs, and pipe chases provide protection from the direct effects of credible events within the respective area for the facility worker.<br>CR provides protection from the direct effects of credible events for the CR Operators | • Vessels and piping are located in a cell/enclosure that is designed to be unoccupied for the life of the facility (Process Vessel Cells, WTE, and East CSSX Tank Cell).<br>• The walls, floor, and ceilings of areas credited for a seismic event are designed to satisfy PC-3 seismic requirements.<br>• The cells/enclosures are designed to be unoccupied during normal operation (P&VGs, West CSSX Tank Cell, CSSX Contactor Operating Deck and Contactor Support Floor Area, CSSX Contactor Operating Deck, South Chases, Glove Boxes 8 and 9, and Hot Cell).<br>• The CR structural boundary protects CR Operators from the direct effects of credible events including PC-3 seismic event. | Design Feature |
| SS | Subchapter:<br>4.4.7<br>Spill Containment | EC-3<br>HA – Fire<br>IC-4, EC-3<br>AA - Seismic | Design of the ASP, CSSX, and sample P&VGs, CSSX Contactor Operating Deck and Contactor Support Floor Area, East CSSX Tank Cell, West CSSX Tank Cell, South Chases, and Hot Cell provide spill containment with the spilled liquid draining to drain tanks in the ASDT Cell (including seismic event).<br>Process Vessel Cells and the WTE provide containment for spills (including seismic event). | • Provide spill containment with the spilled liquid draining to drain tanks in the ASDT Cell (including PC-3 Seismic Event).<br>• The sumps are designed to collect waste as it accumulates on the floor and channel the waste to the gravity-drain to a hold tank, such as the ASDT (TK-601) or Solvent Drain Tank (TK-208) (including PC-3 Seismic Event).<br>Process Vessel Cells and the WTE provide containment for spills (including PC-3 seismic event) | Design Feature |

**Table 4.7-1. Safety Significant Structures, Systems, and Components (cont.)**

| Functional Class | Chapter 4 SS SSC | Chapter 3 Accident Reference | Safety Function | Functional Requirement | TSR Coverage |
|---|---|---|---|---|---|
| SS | Subchapter:<br>4.4.8<br>Drain Lines to ASDT Cell Tanks (ASDT [TK-601], Solvent Drain Tank [TK-208], and Lab Drain Tank [TK-235]) | EC-13<br>HA – Direct Exposure<br>HA – Loss of Confinement<br>EC-13<br>AA - Seismic: | The drain lines channel spills (waste and/or solvent) to the ASDT (TK-601) and Solvent Drain Tank (TK-208) in the ASDT Cell to mitigate exposure to the facility workers and reduce the probability of large solvent fires.<br>The drain lines from the Laboratory Hot Cells will channel spills (waste and/or solvent) to the Lab Drain Tank (TK-235) in ASDT Cell to mitigate exposure to facility workers. | • Provide a gravity drain from the ASP P&VGs, Sample P&VG, CSSX P&VGs, South Chases, CSSX Contactor Operating Deck and Contactor Support Floor Area, and East and West CSSX Tank Cells sumps to hold tanks ASDT (TK-601) or Solvent Drain Tank (TK-208).<br>• The drain pipe to ASDT (TK-601), Solvent Drain Tank (TK-208), and Lab Drain Tank (TK-235) is also required to survive a PC-3 seismic event and is designed to satisfy PC-3 seismic requirements.<br>• Provide a gravity drain from the Laboratory Hot Cells sumps to the Lab Drain Tank (TK-235). | Design Feature |
| SS | Subchapter:<br>4.4.9<br>Analytical Laboratory Hot Cells and AFF Sample Gloveboxes | EC-6, EC-9<br>HA – Fire<br>HA – Direct Exposure<br>HA – Loss of Confinement<br>HA – NPH (Hot Cell)<br>EC-9<br>AA – Seismic (Hot Cell) | The facility worker (Onsite-1) is maintained external to the Hot Cells and AFF Sample Gloveboxes in the Analytical Laboratory which provides protection from the direct effects of spills and leaks that may occur in the Hot Cells or glovebox. | • The Hot Cells and Gloveboxes 8 and 9 prevent the spread of radioactive materials to protect the immediate worker from the direct effects of leaks or spills.<br>• The Hot Cells are designed to satisfy PC-3 seismic requirements. | Design Feature |

**Table 4.7-1. Safety Significant Structures, Systems, and Components (cont.)**

| Functional Class | Chapter 4 SS SSC | Chapter 3 Accident Reference | Safety Function | Functional Requirement | TSR Coverage |
|---|---|---|---|---|---|
| SS | Subchapter:<br>4.4.10<br>APAs and Supporting Plant Air Sub-System | EC-10<br>HA – Loss of Confinement<br>EC-10<br>AA – APA Aerosolization<br>EC-20, EC-21<br>AA - APA Aerosolization<br>AA - Seismic | Prevention/mitigation of the APA aerosolization event by design of the piping minimizes the air flow and velocity of air impinging on waste in process vessels.<br>DID for post-seismic Recovery: Plant Air lines to the APA pulse pots are required to remain operable to ensure that waste in the ASP tanks can be periodically agitated including connection points for portable air compressor. | • The 2-inch air supply line diameter feeding the APA pulse jet are smaller than the APA pulse jet nozzle diameter (AST-A [TK-101], FFT-A [TK-102], SSRT [TK-104], WWHT [TK-105], and SSFT [TK-109]).<br>• Head losses through configuration of air supply lines from the respective Process Vessel APA Charge Tank to the individual APAs limit the air flow rate and velocity of air impinging on waste in process vessels is limited to less than analyzed values (AST-A [TK-101], FFT-A [TK-102], SSRT [TK-104], WWHT [TK-105], and SSFT [TK-109]).<br>• Restrictive Flow Orifices are sized as analyzed to limit the air flow rate to be within the values specified in the AA in process vessels and designed to satisfy PC-3 seismic requirements (FFT-A [TK-102], SSRT [TK-104], WWHT [TK-105], and SSFT [TK-109]).<br>• In-vessel Air Supply Piping and the APAs (AST-A [TK-101], FFT-A [TK-102], SSRT [TK-104], WWHT [TK-105], and SSFT [TK-109]) are designed to satisfy PC-3 seismic requirements.<br>• To ensure that the air systems perform their DID safety functions for seismic event, the APA Plant Air System within the boundary defined above (Out to isolation valve external to the Process Vessel Cells) for ASP tanks (AST-A [TK-101], FFT-A [TK-102], SSRT [TK-104], SSFT [TK-109] and WWHT [TK-105]) is designed to satisfy PC-3 seismic requirements. | Design Feature |

**Table 4.7-1. Safety Significant Structures, Systems, and Components (cont.)**

| Functional Class | Chapter 4 SS SSC | Chapter 3 Accident Reference | Safety Function | Functional Requirement | TSR Coverage |
|---|---|---|---|---|---|
| SS | Subchapter:<br>4.4.11<br>PVVS | EC-8<br>HA – Fire<br>HA – Explosion<br>HA – Loss of Confinement<br><br>EC-8<br>AA - APA Aerosolization<br>EC-22<br>AA - Seismic | The PVVS ensures airborne releases from non-NPH in-vessel events are not allowed to exit the CPA without being filtered.<br>PVVS piping in the Process Vessel Cells (up to and including the first isolation damper external to the cells) provide the DID capability to ventilate the specific process vessels (for recovery) after a seismic event. | • PVVS provides a flow path to the PVVS Filter from Process Vessels (AST-A [TK-101], FFT-A [TK-102], SSRT [TK-104], WWHT [TK-105], SSFT [TK-109], SEHT (TK-205), ASDT [TK-601], CSDT-A [TK-103], Lab Drain Tank [TK-235], Solvent Drain Tank [TK-208], and SAST [TK-127]).<br>• PVVS in-cell piping associated with the AST-A (TK-101), FFT-A (TK-102), SSRT (TK-104), SSFT (TK-109), SEHT (TK-205), and WWHT [TK-105] (up to and including the first isolation valve/damper external to the cells) is PC-3. | LCO 3.2.1<br><br>Design Feature |

**Table 4.7-1. Safety Significant Structures, Systems, and Components (cont.)**

| Functional Class | Chapter 4 SS SSC | Chapter 3 Accident Reference | Safety Function | Functional Requirement | TSR Coverage |
|---|---|---|---|---|---|
| SS | Subchapter:<br>4.4.12<br>ADS and Supporting Plant Air Sub-System | EC-1<br>HA – Fire (deflagration):<br>HA – Explosion:<br><br>EC-2<br>HA – NPH<br><br>EC-1, EC-2<br>AA – ASP Vessel Explosion<br>AA - Seismic | The ADS maintains an air purge to select vessels and equipment at a rate sufficient to maintain the vapor spaces below flammable conditions.<br>The ADS also provides sufficient air flow to the Solvent Drain Tank (TK-208), SHT (TK-202), DSS Coalescer (TK-201), and CSSX contactor vent header to maintain the vapor spaces below 25% of CLFL.<br>The ADS provide an ongoing long-term capability to provide dilution air to the process vessels to prevent a vessel explosion.<br>Providing a connection point for a portable air compressor and piping to augment the back-up air receivers in the ADS to ensure ADS flows keep vessels below 100% of CLFL for 10 days. This function is also provides for DID post-seismic recovery (past 10 days). | ADS purge air supply to the selected process vessels and equipment performs its credited safety functions:<br>• During normal operation, the ADS must supply sufficient purge air flow from the Plant Air System to the Solvent Drain Tank (TK-208), SHT (TK-202), DSS Coalescer (TK-201), and contactor vent header to maintain the flammable gas concentrations in the vapor space below 25% of the CLFL (IC).<br>• Upon loss of normal purge air flow, the ADS must supply sufficient purge air from the back-up air receivers to the selected process vessel and equipment vapor spaces to maintain the flammable gas concentration in the vapor space below 100% of CLFL for a period of four days.<br>To ensure that the ADS purge air supply to the process vessels in the Process Vessel Cells:<br>• ADS piping in the Process Vessel Cells and within the defined boundary must remain intact to allow for connection of a portable compressed air supply (including PC-3 Seismic Event) and is designed to satisfy PC-3 seismic requirements. | LCO 3.3.1 |

**Table 4.7-1. Safety Significant Structures, Systems, and Components (cont.)**

| Functional Class | Chapter 4 SS SSC | Chapter 3 Accident Reference | Safety Function | Functional Requirement | TSR Coverage |
|---|---|---|---|---|---|
| SS | Subchapter:<br>4.4.13<br>PBVS | EC-16<br>HA –Fire:<br>HA – Explosion:<br>HA – Loss of Confinement<br><br>EC-8<br>HA – Fire<br>HA – Explosion<br>HA – Loss of Confinement<br><br>EC-8<br>AA - Process Cell Fire<br>AA - APA Aerosolization<br><br>EC-16<br>AA - APA Aerosolization | The PBVS ensures that non-negligible airborne releases from non-NPH events within the CPA are confined and filtered. | • PBVS sweeps areas away from occupied areas. (ASP, Sample, and CSSX P&VGs, Drum-off/Decon Area, CSSX Contactor Operating Deck and Contactor Support Floor Area and from the corridors into the P&VG labyrinth.).<br>• PBVS filters releases through HEPA filters.<br>• PBVS ventilates the Process Vessel Cells, WTE, and East and West CSSX Tank Cells and removes radioactive material from atmosphere. | LCO 3.2.2 |

**Table 4.7-1. Safety Significant Structures, Systems, and Components (cont.)**

| Functional Class | Chapter 4 SS SSC | Chapter 3 Accident Reference | Safety Function | Functional Requirement | TSR Coverage |
|---|---|---|---|---|---|
| SS | Subchapter:<br>4.4.14<br>Analytical Laboratory Ventilation System | EC-15<br>HA – Direct Exposure<br>HA - Loss of Confinement<br>HA – Fire<br>HA – Explosion<br><br>EC-19<br>HA – Fire<br>HA – Explosion<br>HA – Direct Exposure | Protecting local on-site 1 worker from leak/spray of waste in either the AFF Sampler Gloveboxes (GB-008 and GB-009) or Hot Cells.<br>The Analytical Laboratory Ventilation System is credited to prevent an unfiltered release as a result of non-NPH sample system leakage events. | • Analytical Laboratory Ventilation System provides a slight negative pressure in the gloveboxes and Hot Cells to prevent the spread of contamination (protection of On-site 1 worker).<br>• Analytical Laboratory Ventilation System provides a filtered release path (Hot Cell HEPA Filter) for non-NPH sample system leakage events. | LCO 3.2.3 |
| SS | Subchapter:<br>4.4.15<br>WTE Vent Line | EC-24<br>HA – Fire | The WTE vent line is credited for providing a negative pressure in the WTE, with respect to the Waste Transfer Access Room. This action reduces the spread of contamination following a leak or spill event in the WTE. | The WTE vent line provides a passive path to maintain a dP sufficient to ensure any air leakage is from the Waste Transfer Access Room into the WTE. | Design Feature |

**Table 4.7-1. Safety Significant Structures, Systems, and Components (cont.)**

| Functional Class | Chapter 4 SS SSC | Chapter 3 Accident Reference | Safety Function | Functional Requirement | TSR Coverage |
|---|---|---|---|---|---|
| SS | Subchapter:<br>4.4.16<br>AFF Ventilation System | EC-8<br>HA – Fire<br>HA – Explosion<br>HA – Loss of Confinement<br><br>EC-23<br>HA – Direct Exposure<br>HA – Loss of Confinement<br>HA – Fire<br>HA – Explosion<br><br>EC-8<br>AA - AFF Vessel Explosion | The AFF Ventilation Exhaust System provides a filtered pathway (HEPA Filter) for airborne radioactive material present within the AFF. | • AFF ventilation system ensures that areas having a higher potential for airborne contamination are maintained at a negative pressure, relative to atmosphere; and<br>• AFF ventilation ensures that all non-negligible airborne releases from non-NPH events are filtered prior to release. | LCO 3.7.2 |

**Table 4.7-1. Safety Significant Structures, Systems, and Components (cont.)**

| Functional Class | Chapter 4 SS SSC | Chapter 3 Accident Reference | Safety Function | Functional Requirement | TSR Coverage |
|---|---|---|---|---|---|
| SS | Subchapter:<br>4.4.17<br>Safety Instrumented System Logic Solver | EC-11.a.b<br>HA – Fire<br>HA – Direct Exposure<br>HA – Loss of Confinement<br><br>EC-11.c<br>HA – Fire<br>HA – Explosion<br>AA - All SS Interlocks and Alarms | The Tricon PLC:<br>• Performs the input logic processing for both the SIFs (SS Interlocks) and the identified SS CR alarms.<br>• Processes all of the SS interlock input parameters, logic, and outputs the safe state condition (de-energizes relays) to stop pumps associated with the SS interlocks.<br>• Processes all of the SS alarm input parameters, logic, and outputs the SS CR alarms. | • Tricon PLC is designed to satisfy PC-3 seismic requirements to ensure operability after a seismic event.<br>• SIFs (SS Interlocks): Processes the inputs for each Interlock input parameter and on detection of the parameter setpoint being exceeded (interlock logic met), the associated relays and power contactors are de-energized to place the required components in their respective safe state (stop the pumps).<br>• SS Alarms: Processes the inputs for each Alarm input parameter and on detection of the parameter setpoint being exceeded (alarm logic met), activating the respective CR alarm. | LCOs (multiple) |
| SS | Subchapter:<br>4.4.18<br>Tank Temperature Interlocks to Filter Recirculation Pumps | EC-11.c<br>HA – Fire<br>HA – Explosion<br><br>EC-11.c<br>AA - ASP Vessel Explosion<br>AA - Seismic | The interlock trips off the filter recirculation pumps for FFT-A (TK-102) or SSRT (TK-104) to prevent process liquid heat-up and elevated tank temperature which would decrease the time to CLFL and prevent vessel explosion. | • On detection of a high temperature in a process vessel, the respective filter recirculation pumps are automatically stopped.<br>• Interlock is designed to satisfy PC-3 seismic requirements. | LCO 3.1.3 |

**Table 4.7-1. Safety Significant Structures, Systems, and Components (cont.)**

| Functional Class | Chapter 4 SS SSC | Chapter 3 Accident Reference | Safety Function | Functional Requirement | TSR Coverage |
|---|---|---|---|---|---|
| SS | Subchapter:<br>4.4.19<br>Filter Feed Tank-B Recirculation Loop Temperature Interlocks | EC-11.c<br>HA – Fire<br>HA – Explosion<br><br>EC-11.c<br>AA - AFF Vessel Explosion<br>AA - Seismic | The interlock trips off the respective FFT-B filter recirculation pump to prevent process liquid heat-up and elevated tank temperature which would decrease the time to CLFL and prevent vessel explosion. | • On detection of a high temperature in a FFT-B filter recirculation loop, the respective filter recirculation pump is automatically stopped.<br>• Interlock is designed to satisfy PC-3 seismic requirements. | LCO 3.7.3 |
| SS | Subchapter:<br>4.4.20<br>Analytical Laboratory Ventilation System: Hot Cell/Glovebox Vacuum Interlock | EC-11.a<br>HA – Fire<br><br>EC-11.b<br>HA – Fire<br>HA – Direct Exposure<br>HA – Loss of Confinement | The Analytical Laboratory Ventilation System air flow mitigates the consequences of leaks and spills in the Laboratory Hot Cells and AFF Sample Gloveboxes by filtering the air and directing contamination away from personnel.<br>Low Analytical Laboratory Ventilation System Hot Cell/glovebox Vacuum Interlock stops the sample pumps, which ensures that sample operations take place only when Analytical Laboratory Ventilation system air flow is available. | • On detection of low Hot Cell Analytical Laboratory Ventilation System flow (low vacuum), power to the respective sample pumps is interrupted.<br>• On detection of low Glovebox 8 Analytical Laboratory Ventilation System flow (low vacuum), power to the respective sample pumps is interrupted.<br>• On detection of low Glovebox 9 Analytical Laboratory Ventilation System flow (low vacuum), power to the respective sample pumps is interrupted. | LCO 3.2.4<br>3.7.4 |
| SS | Subchapter:<br>4.4.21<br>High-turbidity Interlock | IC-11<br>AA - AFF Vessel Explosion,<br>AA - Seismic | The in-line turbidity instrumentation on the Salt Solution Feed line to the CSSX process protects the source terms associated with postulated events downstream (CSSX process and AFF). | • On detection of a high concentration of particulate material, the salt solution feed pumps are automatically stopped.<br>• Interlock is designed to satisfy PC-3 seismic requirements. | LCO 3.1.1 |

**Table 4.7-1. Safety Significant Structures, Systems, and Components (cont.)**

| Functional Class | Chapter 4 SS SSC | Chapter 3 Accident Reference | Safety Function | Functional Requirement | TSR Coverage |
|---|---|---|---|---|---|
| SS | Subchapter:<br>4.4.22<br>Barium-137 Decay Tank Gamma Detector and Interlock | IC-10<br>HA – Loss of Confinement<br>IC-10<br>AA - AFF Vessel Explosion<br>AA - Seismic | The AFF inventory includes a $^{137}$Cs-depleted waste stream. The gamma detector downstream of the BDT interlock ensures that only a $^{137}$Cs-depleted waste stream enters the AFF. | • On detection of high gamma radiation in the DSS stream, the CSS flow to the contactors (salt solution feed pumps) and the DSS flow to the AFF (respective BDT pump) are automatically stopped.<br>• Interlock is designed to satisfy PC-3 seismic requirements. | LCO 3.1.2 |
| SS | Subchapter:<br>4.4.23<br>ADS Low Pressure Alarms | IC-13<br>AA - ASP Vessel Explosion<br>AA - Seismic | The ADS maintains an air purge to select vessels and equipment at a rate sufficient to maintain the vapor spaces below flammable conditions.<br>• Back-up Air Receivers Pressure: Alert CR Operator to inadequate inventory of pressurized air (Four Day Supply).<br>• Normal Purge Air Header Pressure: Alert CR Operator to inadequate flow to maintain Solvent Drain Tank (TK-208) less than 25% of CLFL (IC).<br>• Low Pressure Backup Purge Air Header Pressure: Alert CR Operator to inadequate flow to maintain Solvent Strip Feed Tank (TK-217), SHT (TK-202), and Contactor Vent Header are less than 25% of CLFL (IC). | • On detection of low Pressure on the High Pressure Backup Air Header, the respective CR alarm is annunciated (PIT-7311 on ANN-001).<br>• On detection of low Pressure on the Normal Plant Air Header to Air Purge, the respective CR alarm is annunciated (PIT-7323 on ANN-001).<br>• On detection of low Pressure on the Low Pressure Backup Air Header, the respective CR alarm is annunciated (PIT-7314 on ANN-001). | LCO 3.3.1 |

**Table 4.7-1. Safety Significant Structures, Systems, and Components (cont.)**

| Functional Class | Chapter 4 SS SSC | Chapter 3 Accident Reference | Safety Function | Functional Requirement | TSR Coverage |
|---|---|---|---|---|---|
| SS | Subchapter:<br>4.4.24<br>PVVS Low-Vacuum Alarm | IC-12<br>AA - ASP Vessel Explosions<br>AA- Seismic | PVVS flow is an IC to maintain less than 25% (CLFL) concentration in process vessels as a preventer of Vessel Explosion Events. | • On detection of low PVVS vacuum (flow), an alarm is annunciated in the CR. | LCO<br>3.2.1 |
| SS | Subchapter:<br>4.4.25<br>PBVS Instrumentation and Alarms | SSC-2<br>(No Chapter 3 reference.) | The PBVS operation ensures that non-negligible airborne releases from the CPA are confined and filtered for all non-NPH events.<br>The PBVS instrumentation and alarms monitor PBVS operation. | • PBVS cell low-flow CR alarm: On detection of low PBVS flow through the Cell, the respective CR alarm is annunciated.<br>• Cell Negative Pressure CR alarm: On detection of low dP in the Cell, the respective CR alarm is annunciated.<br>• P&VG Negative Pressure CR alarm: On detection of low dP in the P&VG, with respect to normally occupied areas, the respective CR alarm is annunciated.<br>• Drumoff Area Negative Pressure CR alarm: On detection of low dP in the Drumoff Area, with respect to atmosphere, the respective CR alarm is annunciated.<br>• Contactor Operating Deck and Contactor Support Floor Area Negative Pressure CR alarm: On detection of low dP in the Contactor Operating Deck and Contactor Support Floor Area, with respect to atmosphere, the respective CR alarm is annunciated.<br>• PBVS HEPA filters Hi dP CR alarm: On detection of high dP across the PBVS exhaust HEPA filters and cell inlet HEPA filters, the respective CR alarm is annunciated. | LCO<br>3.2.2 |

**Table 4.7-1. Safety Significant Structures, Systems, and Components (cont.)**

| Functional Class | Chapter 4 SS SSC | Chapter 3 Accident Reference | Safety Function | Functional Requirement | TSR Coverage |
|---|---|---|---|---|---|
| SS | Subchapter:<br>4.4.26<br>PVVS HEPA Filter Instrumentation and Alarms | SSC-1<br>(No Chapter 3 reference.) | The PVVS flow path ensures that non-negligible airborne releases from the process vessels are confined and filtered for all non-NPH events.<br>Instrumentation and alarms monitor PVVS HEPA Filter availability. | • On detection of high dP across the PVVS exhaust HEPA filters, an alarm is annunciated in the CR. | LCO 3.2.1 |
| SS | Subchapter:<br>4.4.27<br>Analytical Laboratory Ventilation System HEPA Filter Instrumentation and Alarms | SSC-3<br>(No Chapter 3 reference.) | The Analytical Laboratory Ventilation System operation ensures that non-negligible airborne releases from the Lab area are confined and filtered for all non-NPH events.<br>dP sensor and Hi alarm on the Analytical Laboratory Ventilation System exhaust HEPA filters alert Operators to HEPA pluggage (high dP). | • On detection of high dP across the Analytical Laboratory Ventilation System exhaust HEPA filters, the associated CR alarm is annunciated. | LCO 3.2.3 |

**Table 4.7-1. Safety Significant Structures, Systems, and Components (cont.)**

| Functional Class | Chapter 4 SS SSC | Chapter 3 Accident Reference | Safety Function | Functional Requirement | TSR Coverage |
|---|---|---|---|---|---|
| SS | Subchapter:<br>4.4.28<br>AFF Ventilation System Instrumentation and Alarms | SSC-4<br>(No Chapter 3 reference.) | The AFF Ventilation System provides a filtered pathway for airborne radioactive material present within the AFF for all non-NPH events.<br>• AFF Process Vessel Area Negative Pressure CR alarm alerts Operators to lack of negative pressure inside the AFF Process Vessel Area.<br>• AFF Ventilation System HEPA filter Hi dP CR alarm alerts Operators of HEPA pluggage (high dP). | • On detection of low vacuum in the AFF Process Vessel Area, the associated CR alarm is annunciated.<br>• On detection of high dP across the AFF Ventilation System exhaust HEPA filters, the associated CR alarm is annunciated. | LCO 3.7.2 |
| SS | Subchapter:<br>4.4.29<br>Waste Container Vents | EC-5<br>HA – Fire (deflagration)<br>HA – Explosion | Vents installed on waste drum(s) or other waste container(s) containing waste meeting the requirements of the SRS Solid Waste Facility WAC prevents the build-up of flammable vapor and a possible Vessel Explosion. | • Flammable vapors generated in the waste container are vented as required by the SRS Solid Waste Facility WAC by installing vents approved for use by SRS Solid Waste Facility. | Design Feature |
| SS | Subchapter 4.4.30<br>13.8-kV Manual Disconnect Switches | AC-2<br>HA – NPH<br><br>AC-2<br>AA - Seismic | The 13.8-kV Manual Disconnect Switches provide a means of removing all AC electrical motive power from the SWPF resulting in the stopping of all external recirculation pumps that may be adding heat to process vessels. | • When manually actuated, the switches interrupt all 13.8-kV electrical power feeds to the SWPF for the PC-3 Seismic Event and are designed to satisfy PC-3 seismic requirements. | Design Feature |

**Table 4.7-2. Specific Administrative Controls**

| Functional Class | Chapter 4 SAC | Chapter 3 Accident Reference | Safety Function | Functional Requirement | TSR Coverage |
|---|---|---|---|---|---|
| SS | Subchapter: 4.5.1<br>WAC Program | IC-9<br>Subchapter 3.3.1.2.2 Assumption 18 | Protects inputs and assumptions for the safety analysis with respect to the characteristics of the feed waste transferred from the HTF to SWPF | Waste streams received into the facility shall comply with the limits/requirements (accounting for analytical uncertainty) for the following items:<br>• Soluble $^{137}Cs \leq 2.0$ Curies per gallon (Ci/gal),<br>• Suspended solids $\leq$ 1,200 milligrams per liter (mg/L),<br>• Soluble $^{90}Sr \leq 5.21E-03$ Ci/gal,<br>• Total $^{90}Sr \leq 1.1E-01$ Ci/gal,<br>• $NO_{effective} \geq 1.0$ Molar (M),<br>• Inhalation dose potential (total) $\leq$ 1.1E+06 rem/gallon,<br>• Inhalation dose potential (solution) $\leq$ 4.4E+05 rem/gallon,<br>• Uranium (U) $\leq$ 25 mg/L,<br>• Plutonium (Pu) $\leq$ 2.5 mg/L, and<br>• U content $\leq$ 8 wt% U-235. | SAC |
| SS | Subchapter<br>4.5.2 Process Chemistry Control Program | IC-7<br>Subchapter 3.3.1.2.2 Assumptions 22, 64 | Protects ICs for the safety analysis based on particular parameters of selected cold chemicals and process streams. | Upon receiving MST and CSSX solvent at SWPF and prior to placement of the material in CCA tanks, the vendor characterization of the chemicals must be verified to comply with the following limits:<br>• Alcohol content of MST (methanol plus ethanol) less than 500 ppm, and<br>• The diluent used in the CSSX solvent is Isopar L. | SAC |

**Table 4.7-2. Specific Administrative Controls (cont.)**

| Functional Class | Chapter 4 SAC | Chapter 3 Accident Reference | Safety Function | Functional Requirement | TSR Coverage |
|---|---|---|---|---|---|
| SS | Subchapter:<br>4.5.3<br>Ignition Source Control Program | AC-7<br>AA – ASP Vessel Explosion<br>AA – Cell Fire | To preclude activities that could introduce an ignition source into any location within the Process Vessel Cells or the WTE. | Energized electrical components shall be confirmed by engineering evaluation to not pose an ignition hazard within the general area of the cells prior to being inserted into the Process Vessel Cells or the WTE. | SAC |
| SS | Subchapter:<br>4.5.4<br>Solvent Removal Program | AC-4<br>HA – Fire<br>HA – Explosion<br>HA – NPH<br>AA – AFF Vessel Explosion<br>AA - Seismic | To ensure the volume of CSSX solvent in a floating layer within the FFT-B (TK-222) and the MST/Sludge Transfer Tank (MSTT) (TK-224) does not reach the values assumed in the safety analysis. | • A solvent recovery operation shall be periodically performed on the IST (TK-220) when AFF is in Multi-Strike Mode.<br>• Interval between solvent recovery operations shall not exceed 1,420,000 gallons. | SAC |
| SS | Subchapter:<br>4.5.5 Tank Agitation Program – AST-A (TK-101), FFT-A (TK-102), and SSRT (TK-104) | IC-14<br>HA – Fire (Deflagration)<br>HA – Explosion<br>AA – ASP Vessel Explosion | To maintain the solids routinely suspended in the process vessels while the vessels contain a sufficient volume of liquid with a significant solids concentration that could pose a potential trapped gas issue if the solids were allowed to settle and remain undisturbed for an extended period of time. | • APAs in the AST-A (TK-101), FFT-A (TK-102) and the SSRT (TK-104) shall be operating.<br>• Status of the APAs shall be periodically confirmed by operators.<br>• Presence of sufficient PMVS header vacuum to support APA operations shall be periodically confirmed by operators. | LCO 3.1.5 |
| SS | Subchapter:<br>4.5.6 Tank Agitation Program – FFT-B, MSTT | IC-14<br>HA – Fire (Deflagration)<br>HA – Explosion<br>AA - AFF Vessel Explosion | To frequently suspend the solids in the vessels while the vessel contains a sufficient volume of liquid with a significant solids concentration that could pose a potential trapped gas issue if the solids were allowed to settle and remain undisturbed for an extended period of time. | • FFT-B and MSTT agitators shall not be shut down for a period greater than 48 hours.<br>• The status of the agitators shall be periodically confirmed by operators. | LCO 3.7.1 |

**Table 4.7-2. Specific Administrative Controls (cont.)**

| Functional Class | Chapter 4 SAC | Chapter 3 Accident Reference | Safety Function | Functional Requirement | TSR Coverage |
|---|---|---|---|---|---|
| SS | Subchapter:<br>4.5.7<br>Draining Slurried Solids for FFT-B (TK-222)/MSTT (TK-224) to Alpha Finishing Drain Tank (TK-228) | AC-9<br>AA - AFF Vessel Explosion | To prevent conditions in the Alpha Finishing Drain Tank (AFDT) (TK-228) that would result in the time to reach CLFL in the vessel becoming shorter than 10 days. | • The volume of slurried solids drained from the FFT-B (TK-222) and MSTT (TK-224) to the AFDT (TK-228) shall be limited to 200 gallons. | SAC |
| SS | Subchapter:<br>4.5.8<br>Inter-facility Transfer Control Program | This SAC is imposed by interfacing Liquid Waste Facilities. See CSTF, DWPF, and Saltstone DSAs for AA references | The safety function of this control is to prevent and/or mitigate the consequences of an event initiated by a mistransfer or a spill/leak of material being transferred between SRS Liquid Waste facilities. | An Inter-Facility Transfer Control Program shall be established governing radioactive waste transfers and the transfer of DSS. The key elements of the program that are classified as SACs are:<br>1. Prior to transfers to DWPF, confirm that either the receipt of the entire sending tank contents is acceptable to DWPF or the intended transfer volume entered into the SWPF BPCS is acceptable to DWPF.<br>2. Sound isolation (single leak tested valve, double valve isolation, or blank) of the SEHT (TK-205) and SSRT (TK-104) from the DWPF transfer lines is required when not transferring to DWPF. When sound isolation is not possible, notification shall be given to the DWPF Shift Manager/CR Manager of the potential for an unintended waste transfer and excavating activities shall be prohibited near the strip effluent and MST/sludge transfer lines within J-Area. This control does not apply to vent | SAC |

**Table 4.7-2. Specific Administrative Controls (cont.)**

| Functional Class | Chapter 4 SAC | Chapter 3 Accident Reference | Safety Function | Functional Requirement | TSR Coverage |
|---|---|---|---|---|---|
| | | | | lines connected to the headspace of the SEHT (TK-205).<br>3. Transfers to DWPF shall be terminated when directed by the DWPF CR.<br>4. Transfers to DWPF shall be terminated and sound isolation provided (single leak tested valve, double valve isolation, or blank) following:<br>a) A seismic event,<br>b) Notification of a Tornado watch, tornado warning, or high wind warning as issued by the SRS Operations Center (SRSOC), or<br>c) Notification of a DWPF tornado/high wind event.<br>5. Provide sound isolation of the SEHT (TK-205) from DWPF's transfer line (single leak tested valve, double valve isolation, or blank) while draining the strip effluent transfer line to the Low Point Pump Pit (LPPP). This control does not apply to vent lines connected to the headspace of the SEHT (TK-205).<br>6. Transfer procedures shall identify the functional equipment required to stop transfers of DSS out of SWPF, and to isolate SWPF from the Tank 50-to-Z Area inter-area line.<br>7. Transfers of DSS into Concentration, Storage, and Transfer Facility (CSTF) shall be terminated following a seismic event.<br>8. Transfers of DSS into CSTF shall be terminated following notification of the | |

**Table 4.7-2. Specific Administrative Controls (cont.)**

| Functional Class | Chapter 4 SAC | Chapter 3 Accident Reference | Safety Function | Functional Requirement | TSR Coverage |
|---|---|---|---|---|---|
| | | | | following:<br>a) Tornado warning, tornado watch, or high wind warning as issued by the SRSOC,<br>b) CSTF tornado/high wind event,<br>c) Saltstone tornado/high wind event,<br>d) CSTF wildland fire event, or<br>e) CSTF CR abandonment event. | |
| SS | Subchapter 4.5.9<br>Seismic Event Response | AC-10<br>AA – Seismic | The safety function of this control is to stop all process pumps and APAs following a seismic event. | Following a seismic event, all process pumps and APAs shall be stopped. | SAC |
| SS | Subchapter 4.5.10<br>High Temperature in the FFT-A or SSRT | AC-11<br>AA – ASP Vessel Explosion | The safety function of this control is to stop the operation of the filter feed pumps, sample pumps, and the APAs for a vessel when the vessel temperature reaches the High Temperature Interlock setpoint for the filter recirculation pumps. | Following an indication that a High Temperature Interlock has actuated or the temperature exceeds the interlock setpoint for the FFT-A (TK-102) or SSRT (TK-104), the filter feed pumps, sample pumps, and the APAs in the affected tank shall be stopped. | SAC |
| SS | Subsection 4.5.11<br>Process Piping Line Drain/ Flush | AC-5a<br>HA – Direct Exposure<br>HA – Loss of Confinement<br>HA – Fire | The safety function of this control is to flush and drain process piping and components as necessary to remove or dilute potentially hazardous process fluids from a system prior to entry and/or performing maintenance that opens the pressure boundary of the system. | Process systems shall be drained and flushed prior to entry and/or performing maintenance that opens the system's pressure boundary | SAC |
| SS | Subsection 4.5.12 | AC-1<br>HA – Direct Exposure | The safety function of this control is to restrict personnel | Personnel access shall be restricted into the areas listed below during normal operations | SAC |

**Table 4.7-2. Specific Administrative Controls (cont.)**

| Functional Class | Chapter 4 SAC | Chapter 3 Accident Reference | Safety Function | Functional Requirement | TSR Coverage |
|---|---|---|---|---|---|
| | Access Control | HA – Loss of Confinement<br>HA – Fire<br>HA – NPH<br>AA - Seismic | entry into plant areas that are unoccupied during normal process operations until potential hazards in the area are removed/controlled and an initial survey of radiological conditions in the area is performed. | following initial commencement of radioactive operations. These areas are:<br>• CSSX Contactor Operating Deck and Contactor Support Floor Area;<br>• West CSSX Tank Cell;<br>• Hot Cells;<br>• Glovebox 8 & 9;<br>• South Chases (i.e., South Utility Chase and Contactor Support Floor Chase); and<br>• CPA P&VG Labyrinths (i.e., Sample, CSSX, and ASP).<br>Personnel access shall also be restricted into the Process Vessel area of AFF after a seismic event.<br>Normal operating/maintenance procedures shall contain appropriate guidance to ensure that potential hazards in an area are removed/controlled before the area is entered. An initial survey of radiological conditions in the area shall be performed before personnel perform work activities.<br>The CSSX Contactor Operating Deck, West CSSX Tank Cell, and P&VG Labyrinths will be maintained as exclusion areas by physical controls (e.g., locked door/hatch). The physical controls used to meet the requirements of this program may be the same as the physical controls used to meet the Radiological Protection Program requirements for locked entries to High Radiation Areas.<br>The limitation on personnel access to Glovebox 8 & 9 applies to any part of the body that breaks | |

**Table 4.7-2. Specific Administrative Controls (cont.)**

| Functional Class | Chapter 4 SAC | Chapter 3 Accident Reference | Safety Function | Functional Requirement | TSR Coverage |
|---|---|---|---|---|---|
| | | | | the plane of the glovebox boundary and is not protected by a feature of the glovebox (e.g., glove). | |
| SS | Subsection 4.5.13 | AC-5.b<br>HA – Loss of Confinement<br>AA – APA Aerosolization | The safety function of this control is to isolate the APAs in the FFT-A (TK-102), SSRT (TK-104), WWHT (TK-105), and SSFT (TK-109) from the Plant Air System's compressed air supply following loss of vacuum in the PVVS header. | The APAs in the FFT-A (TK-102), SSRT (TK-104), WWHT (TK-105), and SSFT (TK-109) shall be isolated from the Plant Air System upon indication that the PVVS header vacuum has been lost. | SAC |

## 4.8 References

[1] 10 CFR 830, *Nuclear Safety Management*.

[2] DOE-STD-3009-94, Change Notice No. 3, *Preparation Guide for U.S. Department of Energy Nonreactor Nuclear Facility Documented Safety Analyses*. U.S. Department of Energy, Washington, D.C.

[3] DOE-STD-1021-93, Change Notice #1, *Natural Phenomena Hazards Performance Categorization Guidelines for Structures, Systems, and Components*. U.S. Department of Energy, Washington, D.C.

[4] DOE-STD-1020-2002, *Natural Phenomena Hazards Design and Evaluation Criteria for Department of Energy Facilities*. U.S. Department of Energy, Washington, D.C.

[5] S-RCP-J-00001, *SWPF Standards/Requirements Identification Document*. Parsons, Aiken, South Carolina.

[6] DOE O 420.1B, *Facility Safety*. U.S. Department of Energy, Washington, D.C.

[7] DOE G 420.1-1, *Nonreactor Nuclear Safety Design Criteria and Explosive Safety Criteria Guide for use with DOE O 420.1, Facility Safety*. U.S. Department of Energy, Washington, D.C.

[8] P-DB-J-00004, *SWPF Balance of Plant Basis of Design*, Revision 6. Parsons, Aiken, South Carolina.

[9] P-DB-J-00002, *SWPF Design Criteria Database*. Parsons, Aiken, South Carolina.

[10] ASME *Boiler and Pressure Vessel Code*. American Society of Mechanical Engineers, New York, New York. July 1, 2001.

[11] ANSI/ASME B31.3-2002, *Process Piping*. American Society of Mechanical Engineers, New York, New York.

[12] NFPA 30, *Flammable and Combustible Liquids Code*. 2003 Edition. National Fire Protection Association.

[13] F-FHA-J-00001, *SWPF Project Fire Hazards Analysis*. Parsons, Aiken, South Carolina.

[14] M-CLC-J-00096, *SWPF Process Drain Lines Sizing Calculation*, Revision 1. Parsons, Aiken, South Carolina.

[15] NUREG-0800, *Standard Review Plan for the Review of Safety Analysis Reports for Nuclear Power Plants*, Revision 2, (LWR Edition). U.S. Nuclear Regulatory Commission Regulation, Washington D.C.

[16] S-CLC-J-00027, *Pulse Jet Mixer Air Jet Aerosolization Event Accident Analysis, Revision 2*. Parsons, Aiken, South Carolina.

[17] 00-700-21943, *ADS Backup Receiver Tanks Pressure Safety Valves (PSV-7307, PSV-7309)*, Revision 1. Interoffice Correspondence from J. Mullaney to B. Brasel. Parsons, Aiken, South Carolina.

[18] DOE-STD-1066-99, *Fire Protection Design Criteria*. U.S. Department of Energy. Washington D.C.

[19] ANSI/ISA 84.00.01-2004, *Functional Safety: Safety Instrumented Systems for the Process Industry Sector* (Parts 1-5). American National Standards Institute/Instrumentation, Systems, and Automation Society.

[20] EQIP-DCS-012, *Triconex Safety Considerations Guide*Parsons, Aiken, South Carolina.

[21] EQIP-DCS-013, *Failure Modes and Effects Analysis*. Parsons, Aiken, South Carolina.

[22] 00-700-26801, *Conditions to Validate SS Instrument Calculations (SIL and Instrument Loop Uncertainty Calculations)*. Interoffice Correspondence from J. Mullaney to M. Pittman and Justin Schulte. Parsons, Aiken, South Carolina. September 12, 2018.

[23] *Salt Waste Processing Facility Project Procedures Manual*. Parsons, Aiken, South Carolina.

[24] J-CLC-J-00016, *SIL Verification Calculation for FFT-A Tank Temp Interlock to Filter Recirculation Pumps*, Revision 0. Parsons, Aiken, South Carolina.

[25] J-CLC-J-00017, *SIL Verification Calculation for SSRT Tank Temp Interlock to Filter Recirculation Pump*, Revision 0. Parsons, Aiken, South Carolina.

[26] J-CLC-J-00014, *SIL Verification Calculation for FFT-B Recirculation Loop High Temp Interlock*, Revision 0. Parsons, Aiken, South Carolina.

[27] J-CLC-J-00010, *Hot Cell Low Vacuum Interlock SIL Verification Calculation*, Revision 1. Parsons, Aiken, South Carolina.

[28] J-CLC-J-00011, *Glovebox 8 and Glovebox 9 Low Vacuum Interlock SIL Verification Calculation*, Revision 1. Parsons, Aiken, South Carolina.

[29] J-CLC-J-00013, *High-Turbidity Interlock SIL Verification Calculation*, Revision 0. Parsons, Aiken, South Carolina.

[30] J-CLC-J-00018, *BDT High Gamma Interlock SIL Verification Calculation, Revision 0*. Parsons, Aiken, South Carolina.

[31] M-CLC-J-00134, Process Vessel Ventilation System Sizing Calculation. Parsons, Aiken, South Carolina.

[32] EQIP-ELEC-002, *MVS Maintenance Schedule*. Parsons, Aiken, South Carolina.

[33] S-RPT-J-00011, *SWPF Impact of SRS Liquid Waste HGR PISAs on the SWPF Safety Basis*. Parsons, Aiken, South Carolina.

[34] X-ESR-J-00001, *SWPF Feed Waste Acceptance Criteria*. Parsons, Aiken, South Carolina.

[35] S-CLC-J-00033, *Time to Reach the Composite Lower Flammability Limit (CLFL) for SWPF Process Vessels*, Revision 1. Parsons, Aiken, South Carolina.

[36] V-QP-J-00001, *SWPF Quality Assurance Plan*. Parsons, Aiken, South Carolina.

[37] P-ESR-J-00013, *SWPF Analytical Laboratory Operations Plan*. Parsons, Aiken, South Carolina.

[38] P-FDD-J-00001, *SWPF Analytical Laboratory Design Requirements*. Parsons, Aiken, South Carolina.

[39] X-SD-J-00004, *SWPF Alpha Finishing Process System Description*. Parsons, Aiken, South Carolina.

[40] X-WCP-J-00001, *SWPF Waste Compliance Plan for Decontaminated Salt Solution Transfers to Tank 50*. Parsons, Aiken, South Carolina.

[41] P-RPT-J-00024, *SWPF Next Generation Solvent Test Report*. Parsons, Aiken, South Carolina.

[42] X-PCD-J-00004, *SWPF Automation Functional Control Sequence for: Alpha Strike Process*. Parsons, Aiken, South Carolina.

[43] P-RPT-J-00008, *SWPF Test Report: Air Pulse Agitator Scale-up Validation*. Parsons, Aiken, South Carolina.

This page intentionally left blank.

# SWPF DOCUMENTED SAFETY ANALYSIS

# CHAPTER 5.0
# DERIVATION OF TECHNICAL SAFETY REQUIREMENTS

This page intentionally left blank.

# TABLE OF CONTENTS

**5.0 DERIVATION OF TECHNICAL SAFETY REQUIREMENTS ..... 5.1-1**

**5.1 Introduction ..... 5.1-1**
**5.1.1 Objective ..... 5.1-1**
**5.1.2 Scope ..... 5.1-1**
**5.2 Requirements ..... 5.2-1**
**5.3 TSR Coverage ..... 5.3-1**
**5.3.1 Safety Limits Coverage ..... 5.3-1**
**5.3.2 Limiting Control Settings Coverage ..... 5.3-1**
**5.3.3 LCO and Surveillance Requirement Coverage ..... 5.3-2**
**5.4 Derivation of Process Areas/Modes ..... 5.4-1**
**5.5 TSR Derivation ..... 5.4-6**
**5.5.1 CPA Process Systems TSR Derivation ..... 5.5-1**
**5.5.2 CPA Ventilation TSR Derivation ..... 5.5-7**
**5.5.3 CPA Flammability Prevention TSR Derivation ..... 5.5-15**
**5.5.4 AFF TSR Derivation ..... 5.5-19**
**5.5.5 Facility Administrative Controls ..... 5.5-25**
**5.5.6 Minimum Shift Crew ..... 5.5-33**
**5.6 Design Features ..... 5.5-34**
**5.6.1 Vital Passive Components ..... 5.6-1**
**5.6.2 Configuration and Physical Arrangement ..... 5.6-1**
**5.6.3 Site Characteristics ..... 5.6-1**
**5.7 Interface with TSRs from Other Facilities ..... 5.7-1**
**5.7.1 Transfer of Radioactive Waste into the SWPF ..... 5.7-1**
**5.7.2 Transfer of Radioactive Waste out of the SWPF ..... 5.7-1**
**5.8 Tables ..... 5.8-1**
**5.9 References ..... 5.9-1**

## List of Tables

**Table 5.8-1. Minimum Shift Crew Requirements ..... 5.8-1**
**Table 5.8-2. Summary of Technical Safety Requirements ..... 5.8-1**

## LIST OF ACRONYMS AND ABBREVIATIONS

| | |
|---|---|
| °F | degrees Fahrenheit |
| % | Percent |
| ADS | Air Dilution System |
| AFDT | Alpha Finishing Drain Tank (TK-228) |
| AFF | Alpha Finishing Facility |
| ALARA | As Low As Reasonably Achievable |
| ANSI | American National Standards Institute |
| APA | Air Pulse Agitator |
| ASDT | Alpha Sorption Drain Tank (TK-601) |
| ASME | American Society of Mechanical Engineers |
| ASP | Alpha Strike Process |
| AST-A | Alpha Sorption Tank-A (TK-101) |
| AST-B | Alpha Sorption Tank-B (TK-221) |
| BDT | Barium-137 Decay Tank (TK-206) |
| BPCS | Basic Process Control System |
| CFF | Cross-flow Filter |
| CFR | Code of Federal Regulations |
| Ci/gal | Curies per gallon |
| CLFL | Composite Lower Flammability Limit |
| CPA | Central Processing Area |
| CR | Control Room |
| Cs | Cesium |
| CSS | Clarified Salt Solution |
| CSSX | Caustic-Side Solvent Extraction |
| CSTF | Concentration, Storage, and Transfer Facilities |
| DBE | Design Basis Event |
| DID | Defense-in-depth |
| DOE | U.S. Department of Energy |
| dP | Differential Pressure |
| DSA | Documented Safety Analysis |
| DSS | Decontaminated Salt Solution |
| DWPF | Defense Waste Processing Facility |
| FFT-A | Filter Feed Tank-A (TK-102) |
| FFT-B | Filter Feed Tank-B (TK-222) |
| $H_2$ | Hydrogen |
| $H_2O$ | Water |
| HEPA | High-efficiency Particulate Air |
| HTF | H-Area Tank Farm |
| IC | Initial Condition |
| IPI | Installed Process Instrumentation |
| LCO | Limiting Conditions for Operation |
| M&TE | Measuring and Test Equipment |

## LIST OF ACRONYMS AND ABBREVIATIONS (cont.)

| | |
|---|---|
| mg/L | Milligrams per liter |
| MST | Monosodium Titanate |
| MSTT | MST/Sludge Transfer Tank (TK-224) |
| NCSE | Nuclear Criticality Safety Evaluation |
| NPH | Natural Phenomena Hazard |
| NTU | Nephelometric Turbidity Unit |
| P&VG | Pump and Valve Gallery |
| PBVS | Process Building Ventilation System |
| PISA | Potential Inadequacy in Safety Analysis |
| PMVS | Pulse Mixer Ventilation System |
| psig | Pounds per Square Inch Gauge |
| PVVS | Process Vessel Ventilation System |
| QA | Quality Assurance |
| rem | Roentgen Equivalent Man |
| SAC | Specific Administrative Control |
| SAST | Spent Acid Storage Tank (TK-127) |
| SB | Safety Basis |
| SC | Safety Class |
| SEHT | Strip Effluent Hold Tank (TK-205) |
| SHT | Solvent Hold Tank (TK-202) |
| SIL | Safety Integrity Level |
| SIS | Safety Instrumented System |
| Sr | Strontium |
| SR | Surveillance Requirement |
| SRS | Savannah River Site |
| SRSOC | Savannah River Site Operations Center |
| SS | Safety Significant |
| SSC | Structure, System, and Component |
| SSFT | Salt Solution Feed Tank (TK-109) |
| SSRT | Sludge Solids Receipt Tank (TK-104) |
| SWPF | Salt Waste Processing Facility |
| TSR | Technical Safety Requirement |
| USQ | Unreviewed Safety Question |
| WAC | Waste Acceptance Criteria |
| WCP | Waste Compliance Plan |
| wt% | Weight Percent |
| WTE | Waste Transfer Enclosure |
| WWHT | Wash Water Hold Tank (TK-105) |

This page intentionally left blank.

# 5.0 DERIVATION OF TECHNICAL SAFETY REQUIREMENTS

## 5.1 Introduction

### 5.1.1 Objective

The purpose of this Documented Safety Analysis (DSA) chapter is to provide information necessary to support Safety Basis (SB) requirements for the derivation of hazard controls in Title 10 Code of Federal Regulations (CFR) Part 830, *Nuclear Safety Management*[1].

This chapter builds on the control functions determined to be essential in Chapters 3.0 and 4.0 of this DSA to derive Technical Safety Requirements (TSRs). This chapter is meant to support and provide the information necessary for the separate TSR document required by 10 CFR 830.205, *Technical Safety Requirements*[1]. Derivation of TSRs consists of summaries and references to pertinent chapters of the DSA, in which design (i.e., structures, systems, and components [SSCs]) and administrative features (i.e., non-SSCs) are needed to prevent or mitigate the consequences of accidents. Design and administrative features addressed include those that provide: 1) significant defense-in-depth (DID), 2) significant worker safety, or 3) protection of the public. This chapter provides the necessary level of detail to determine which attributes of the SSCs and administrative features require TSR control.

### 5.1.2 Scope

This chapter is based on the graded approach and includes the following:

Information with sufficient basis from which to derive, as appropriate, any of the following TSR parameters for individual TSRs:

- Safety Limits;
- Limiting Control Settings;
- Limiting Conditions for Operation (LCOs); and/or
- Surveillance Requirements (SRs);
- Information with sufficient basis from which to derive TSR Administrative Controls for specific control features, or to specify programs necessary to perform institutional safety functions;
- Identification of passive design features addressed in this DSA;
- Identification of TSRs from other facilities that affect the Salt Waste Processing Facility (SWPF) SB; and
- Derivation of facility modes.

This page intentionally left blank.

## 5.2 Requirements

This chapter identifies the U.S. Department of Energy (DOE) Orders, design codes, standards, and regulations, and supporting documents that are required to establish the SWPF SB. The primary requirements applicable to the derivation of TSRs are contained in the following documents:

- 10 CFR 830[1];
- DOE-STD-3009-94, Change Notice No. 3, *Preparation Guide for U.S. Department of Energy Nonreactor Nuclear Facility Documented Safety Analyses*[2];
- DOE G 421.1-2, *Implementation Guide for Use in Developing Documented Safety Analyses to Meet Subpart B of 10 CFR Part 830*[3];
- DOE G 423.1-1A, *Implementation Guide for Use in Developing Technical Safety Requirements*[4]; and
- DOE O 5400.5, Change No. 2, *Radiation Protection of the Public and the Environment*[5].

This page intentionally left blank.

## 5.3 TSR Coverage

This chapter provides assurance that TSR coverage for the facility is complete. TSRs ensure that the safety functions outlined in Chapters 3.0 and 4.0 of the DSA are operational, when required, and preserve the initial conditions (ICs) for the accident scenarios. Chapter 3.0 identifies which SSCs and administrative features are Safety Class (SC) and Safety Significant (SS). Chapter 4.0 systematically evaluates the SSCs identified in Chapter 3.0 and identifies any compensatory measures required for the credited SSCs. These SSCs and administrative features are those that are required to prevent or mitigate Hazardous Events (Subchapter 3.3) and Design Basis Accidents (Subchapter 3.4) within the SWPF and that must, therefore, be evaluated for TSR coverage. Table 5.8-2 provides a summary listing of safety equipment and features required by the safety analysis. The equipment in Table 5.8-2 was evaluated to determine whether TSRs were required to maintain the equipment as operational. Subchapter 0 provides a discussion on the bases for requiring each TSR. Subchapter 0 describes the passive design features of the facility, which include equipment and other features that, if altered or modified, would have a significant effect on safe operation of the SWPF.

Equipment and/or parameters are selected for TSR coverage, based on the required function and the effect an Operator's action could have on the equipment in performing its function. In general, if the equipment is required to perform an active safety function (e.g., open or close valves, start or stop pumps), it was included in an LCO. LCOs are not developed for the passive features (e.g., tanks, structures). Parameters of the SWPF process that are controlled or influenced are also contained in LCO statements. Control of those parameters outside of immediate SWPF control (e.g., isotopic composition of the waste streams) is contained in the Administrative Controls of the TSRs, along with those programs that are credited with performing primary or DID safety functions, as discussed in Chapter 3.0.

### 5.3.1 Safety Limits Coverage

As defined in DOE G 423.1-1A[4], Safety Limits are limits on process variables associated with those physical barriers that, if reached, could directly cause the failure of one or more barriers that prevent the uncontrolled release of radioactive or other hazardous materials, with the potential of consequences to the public above specified guidelines. Based on analysis results of Chapter 3.0, no Safety Limits are required for the SWPF processes.

### 5.3.2 Limiting Control Settings Coverage

As defined in DOE G 423.1-1A[4], Limiting Control Settings are settings on safety systems that control process variables to prevent reaching Safety Limits. Because no Safety Limits are identified for the SWPF, no Limiting Control Settings are required.

### 5.3.3 LCO and Surveillance Requirement Coverage

LCOs are selected to detail operability requirements for the given equipment and ensure that the practical definitive parameter limits are included in the LCO statement. SRs define the minimum requirements necessary for the system/equipment to be considered operable.

The chosen LCOs ensure that equipment/parameters/systems required by the safety analysis are maintained within the safety envelope defined in Chapter 3.0. SRs provide the assurance, on a routine basis, that the operability requirements detailed in Chapters 3.0 and 4.0 are met.

## 5.4 Derivation of Process Areas/Modes

Facility operating Modes define the process objectives, operating parameters, and maintenance and production activities. In this manner, each Mode limits the operational activities of the facility or process area, based on its associated hazards, to safely and efficiently fulfill the process objectives.

Included within the SWPF are several Process Areas, each of which independently performs its specific functions in accomplishing the SWPF mission. The Process Areas controlled by the TSRs are as follows:

- Central Processing Area (CPA) – consisting of the Waste Transfer Enclosure (WTE), Alpha Sorption Tank-A (AST-A) Cell, Filter Feed Tank-A (FFT-A) Cell, Sludge Solids Receipt Tank/Wash Water Hold Tank (SSRT/WWHT) Cell, Salt Solution Feed Tank (SSFT) Cell, Strip Effluent Hold Tank (SEHT) Cell, Alpha Sorption Drain Tank (ASDT) Cell, North and South Alpha Strike Process (ASP) Pump and Valve Galleries (P&VGs), Caustic-Side Solvent Extraction (CSSX) P&VG, Contactor Support Floor, Contactor Operating Deck, East and West CSSX Tank Cells, Sample P&VG, Laboratory Sampler Gloveboxes, and Laboratory Hot Cell; and
- Alpha Finishing Facility (AFF) – consisting of the diked areas surrounding the Intermediate Storage Tank (TK-220), Alpha Sorption Tank-B (AST-B) (TK-221), Filter Feed Tank-B (FFT-B) (TK-222), Monosodium Titanate (MST)/Sludge Transfer Tank (MSTT) (TK-224), Decontaminated Salt Solution (DSS) Hold Tank (TK-207), and Alpha Finishing Drain Tank (AFDT) (TK-228).

Because each Process Area can perform operations independently of the other Process Areas, a separate Mode designation can apply to each Process Area.

**<u>CPA Modes</u>**

The hierarchy of Modes for the CPA from highest to lowest is Operation, Shutdown, and De-inventoried. A general description of each Mode is provided below.

| | |
|---|---|
| Operation Mode: | The Process Area is presently performing, or is declared capable of performing, its intended functions. |
| Shutdown Mode: | Transfer of waste into the FACILITY from the Tank Farm is prohibited.<br>Processing of previously received waste while in this Mode is allowed. Processing of this limited amount of waste may be desirable in order to put the PROCESS AREA systems into an overall more stable condition or to place the Process Area in De-inventoried Mode.<br>Normal operation of Air Pulse Agitators (APAs) is allowed, unless prohibited by the actions of an LCO. |

| | |
|---|---|
| De-inventoried Mode | Normal processing in the affected Process Area is stopped.<br>The contents of affected process vessels shall be emptied and diluted as necessary, such that the amount of waste in each process vessel is sufficiently low that it poses a minimal hazard to facility personnel. The affected systems shall be in a stable condition that is very unlikely to result in an uncontrolled release of radioactive waste.<br>Flammable vapor generation rates from waste shall be sufficiently low that times to reach the Composite Lower Flammability Limit (CLFL) are greater than 60 days. The method of determining hydrogen ($H_2$) generation rates for the purpose of evaluating compliance with this limit shall be consistent with the methodology described in S-RPT-J-00011, *SWPF Impact of SRS Liquid Waste HGR PISAs on the SWPF Safety Basis*[6]. Compliance with this requirement shall be documented in an engineering evaluation that may use sampling results and process knowledge for inputs into the determination of flammable vapor generation rates. The engineering evaluation may determine the impact that any dilution or flushing has on the composition of tank contents. It is not necessary to adjust sampling results to account for the uncertainty associated with laboratory analysis because of the amount of conservatism contained in the methodology for the time to CLFL determination.<br>The concentration of Cesium (Cs)-137 in CSSX strip effluent and in CSSX solvent shall be less than or equal to 1 curies per gallon (Ci/gal). This limit on solvent does not apply to the small solvent layer normally present in the Strip Effluent Coalescer (TK-203) or Strip Effluent Stilling Tank (TK-212). It is not necessary to adjust process instrument readings or sampling results to account for any uncertainty because of the amount of conservatism contained in the limit for Cs-137.<br>The maximum mass of MST/sludge solids allowed to remain in the ASP vessels (i.e., AST-A [TK-101], FFT-A [TK-102], and SSRT [TK-104]) after the start of radioactive operations is equivalent to the mass present in a 0.6-weight percent (wt%) slurry in the tank volume below the level of the center pulse pot nozzle. This amount of solids within these process vessels does not have the potential to trap enough $H_2$ that, if released, the vessel vapor space would reach the CLFL (00-700-26612, *Evaluation of Trapped Gas Releases in Select ASP and AFP Vessels*[7]). Compliance with this requirement shall be documented in an engineering evaluation that may use sampling results and process knowledge for inputs into the determination of the mass of remaining solids. The engineering evaluation may determine the impact that any dilution or flushing has on the composition of tank contents. It is not necessary to adjust sampling results to account for the uncertainty associated with laboratory analysis because of the amount of |

conservatism contained in the limit for the mass of solids.

If a mistransfer of MST/sludge solids to another process vessel had occurred, that receipt vessel must be diluted below a solids mass equivalent to a 0.1 wt% slurry in a normal heel volume prior to the CPA entering De-inventoried Mode.

The limit on the mass of solids in the ASP vessels in this Mode ensures that a release due to any accident in these tanks is bounded by the unmitigated accident analysis contained in Chapter 3.0 for any vessel containing ASP solids. These doses (e.g., 8 roentgen equivalent man [rem] for APA aerosolization in SSFT [TK-109]) are far below the threshold for requiring SS controls for protection of the co-located worker (see S-CLC-J-00027, *Pulse Jet Mixer Air Jet Aerosolization Event Accident Analysis*[8]).

There are no restrictions on the mass of MST/sludge simulant in ASP vessels for entry into DE-INVENTORIED MODE prior to the start of radioactive operations. Any sludge simulant remaining in ASP after the start of radioactive operations will be treated as actinide-laden MST/sludge for the purpose of complying with this criteria for entering DE-INVENTORIED MODE.

Operation of APAs shall be administratively controlled.

The AFF must exit Multi-strike Mode prior to the CPA entering De-inventoried Mode.

The number of modes for SWPF Process Areas is based on the minimum number required to distinguish between different facility conditions, as dictated by required equipment operability and needed parameter limits. If a mode is not used in the LCOs (except for the safest mode) or if it does not have different equipment or parameter limits specified from other modes, it should not be a mode.

SSC operability requirements for Operation Mode for the CPA were set to allow maximum operational flexibility while in the Mode. All normal SWPF activities are allowed in Operation Mode and minimal restrictions are place on the waste characteristics of process vessels (e.g., bounding conditions assumed in the Safety Analysis are allowed).

De-inventoried Mode for the CPA was derived such that none of the SSCs covered by LCOs are required to be operable. The waste inventory of vessels in the CPA is sufficiently low that it poses a minimal hazard to facility personnel.

Shutdown Mode for the CPA was established to provide operational flexibility during periods when the facility is not actively processing and it is not practical or desirable to achieve De-inventoried Mode. Significant hazards will still exist in Shutdown Mode because each process vessel could contain the bounding contents assumed in the Accident Analysis. Therefore, most LCOs still apply in this Mode. Certain LCOs are not applicable in Shutdown Mode, provided the pumps associated with the sensor/interlock circuit are not running (e.g., Barium-137 Decay Tank [BDT] [TK-206] pumps shut down for the DSS High Gamma Interlock).

Typically, the TSR Modes combined with the wording of LCO statements do not create blanket prohibitions for conducting any type of maintenance activity. In cases where an LCO statement requires that an SSC be operable in a given Mode, it is acceptable to intentionally remove the SSC from service. Acceptable reasons for intentionally removing an SSC from service include, but are not limited to, performance of surveillance requirements, preventive maintenance, corrective maintenance, or investigation of operational problems. In these cases where SSCs are intentionally removed from service while required to be operable by LCOs, the Required Actions section of the LCO will be entered and the completion times for Required Actions will be applicable. Maintenance of SSCs not addressed in LCOs will be allowed in all Modes. The maintenance procedures will address appropriate precautions for removing these SSCs from service in order to perform maintenance.

**AFF Modes**

The hierarchy of Modes for the AFF from highest to lowest is Multi-strike Mode and Single-strike Mode. A general description of each Mode is provided below.

Multi-strike Mode: The AFF is presently performing, or is declared capable of performing, its intended functions, including the sorption of radionuclides onto MST and the concentration of solids by filtration.

Single-strike Mode: The AFF is performing activities unrelated to the sorption and concentration of radionuclides onto MST. Transfer of MST from the MST Storage Tank (TK-311) to AST-B (TK-221) is prohibited. The amount of MST in AST-B (TK-221), FFT-B (TK-222), and MSTT (TK-224) is limited to the residual amount remaining after emptying and diluting the process vessels. The maximum concentration of MST allowed to remain in the AFF vessels (i.e., AST-B [TK-221], FFT-B [TK-222], and MSTT [TK-224]) is 0.05 wt% slurry. This concentration of MST within the AFF process has been evaluated in accident analysis calculations and shown to not cause the need for SS controls to prevent or mitigate events (see inventory case AST-B-2 in S-CLC-J-00029, *Radionuclide Concentrations in Process Vessels*[9]). Compliance with this requirement shall be documented in an engineering evaluation that may use sampling results and process knowledge for inputs into the determination of the concentration of remaining solids. The engineering evaluation may determine the impact that any dilution or flushing has on the composition of tank contents. It is not necessary to adjust sampling results to account for the uncertainty associated with laboratory analysis because of the amount of conservatism contained in the limit for the concentration of solids.

SSC operability requirements for Multi-strike Mode for the AFF were set to allow maximum operational flexibility while in the Mode. All normal AFF activities are allowed in Multi-strike Mode and minimal restrictions are placed on the waste characteristics of process vessels (e.g., bounding conditions assumed in the Safety Analysis are allowed).

Single-strike Mode for the AFF was derived such that none of the SSCs covered by LCOs are required to be operable. The waste inventory of vessels in the AFF is sufficiently low that it poses a minimal hazard to facility personnel.

This page intentionally left blank.

## 5.5 TSR Derivation

The following subchapters discuss in detail the bases and derivation of TSRs applicable to the SWPF. This chapter is divided into the major facility process areas (e.g., CPA and AFF).

References to various LCOs (versus subchapter numbers) are made within the following subchapter. This refers to particular subchapters within this chapter that discuss the specified LCOs.

Standardized terminology is used in listing surveillances for LCOs. An instrument loop check is a qualitative verification of acceptable performance by observation of instrument loop behavior. This verification, where possible, includes a comparison of the instrument loop with another independent instrument loop, known values, or other circuits/systems monitoring the same variable. An instrument loop calibration is the adjustment, as necessary, of the loop such that it responds within the required range and accuracy to known values of input. The instrument loop calibration checks that the Safety Instrumented System (SIS) responds properly at the alarm/interlock setpoint.

### 5.5.1 CPA Process Systems TSR Derivation

#### 5.5.1.1 High-turbidity Interlocks (LCO 3.1.1)

Chapter 3.0 credits the high-turbidity interlock with sensing a high turbidity in the process stream between the SSFT and the CSSX contactors, and automatically stopping the salt solution feed pumps.

This LCO requires that the turbidity instrument loop and high-turbidity interlock be operable with a setpoint less than or equal to a value equivalent to 1,150 milligrams per liter (mg/L) solids, adjusted for instrument uncertainty. A solids concentration of 1,150 mg/L correlates to a turbidity of greater than 700 Nephelometric Turbidity Unit (NTU) (WSRC-TR-2001-00413, *Flocculating, Settling, and Decanting for the Removal of Monosodium Titanate and Simulated High-Level Waste Sludge from Simulated Salt Supernate*[10]). Therefore, a large margin exists between the equivalent Safety Analysis Value for turbidity (i.e., 700 NTU) and the upper limit of the instrument range (i.e., 0 – 200 NTU).

This LCO also requires that the CSSX Feed Turbidity Cross Check Alarm be operable and that the deviation between the two CSSX feed turbidity instruments be less than or equal to 11 NTUs. The operable CSSX Feed Turbidity Cross Check Alarm protects an assumption contained in J-CLC-J-00013, *High-Turbidity Interlock SIL Verification Calculation*[11].

This LCO is applicable during Operation and Shutdown Modes. It is not applicable during Deinventoried Mode because process material is not fed from the SSFT (TK-109) into the CSSX contactors and, therefore, no potential exists to transfer solids from the SSFT (TK-109) to downstream locations.

#### 5.5.1.1.1 Verification of Clarified Salt Solution Turbidity (Surveillance Requirement)

This surveillance requires the operator to compare a Clarified Salt Solution (CSS) turbidity measurement against the allowed limit for the parameter. It is normally performed based on a reading from an operable turbidity instrument. Periodic performance of this item is appropriate because a turbidity reading greater than the allowed limit will normally cause an alarm in the Control Room (CR) via the SIS.

When both turbidity instruments are inoperable, this surveillance is normally performed by sampling the SSFT (TK-109). Because the sample pump suction configuration cannot sample the tank until a sufficient volume of liquid is in the tank, an exception is provided for this surveillance at low tank levels. The periodic performance of this surveillance under this circumstance is sufficient because the SS cross-flow filter tubes prevent gross solids from entering the SSFT (TK-109) and being sent downstream.

#### 5.5.1.1.2 Instrument Loop Calibration on Turbidity Instruments (Surveillance Requirement)

This surveillance ensures calibration of the credited turbidity instrument, and that the associated instrumentation reads within the calculated calibration tolerances from the uncertainty calculation. The loop calibration will also ensure that the SIS status lights appropriately respond upon reaching the high turbidity setpoint. The surveillance frequency shall be within the time documented in the uncertainty analysis (J-CLC-J-00199, *Instrument Loop Uncertainty for SS Turbidity Monitors*[12]) and the Safety Integrity Level (SIL) verification calculation (J-CLC-J-00013[11]) which were developed using vendor documentation. The periodic calibration helps to ensure that the installed instrument can perform its intended safety function.

#### 5.5.1.1.3 Test of High Turbidity Interlocks (Surveillance Requirement)

This surveillance shall ensure that the appropriate safety shutdown contactors for the Salt Solution Feed Pumps open when commanded by the SIS. The surveillance frequency shall be within the time documented in the SIL verification calculation (J-CLC-J-00013[11]) which was developed using vendor documentation. Periodic performance of this surveillance ensures that adverse trends in instrumentation performance are monitored.

### 5.5.1.2 BDT High-Gamma Interlocks (LCO 3.1.2)

Chapter 3.0 credits the high-gamma interlock with sensing a high concentration of gamma-emitters in the process stream between the BDT (TK-206) and the DSS Coalescer (TK-201), and automatically stopping the BDT Transfer Pump and the Salt Solution Feed Pumps. This protects the DSA assumptions for concentrations of Cs-137 in the AFF.

The SIS will automatically stop the Salt Solution Feed Pumps upon a high radiation signal from the BDT gamma detectors. The operability of this SIS output is addressed in LCO 3.1.1. A degraded condition of the safety relay/contactors for the Salt Solution Feed Pumps is addressed in LCO 3.1.1 and does not require entry into LCO 3.1.2.

This LCO requires the DSS high-gamma interlock to be operable with a setpoint less than or equal to 0.1 Ci/gal, adjusted for instrument uncertainty. The setpoint of 0.1 Ci/gal protects the inventory assumptions for vessels downstream of the CSSX process in S-CLC-J-00029[9].

This LCO is applicable during Operation Mode and also during Shutdown Mode while a BDT pump is operating. While the BDT pumps are not running in Shutdown Mode, there will be no flow past the gamma monitor and, therefore, no potential to transfer high-gamma material into unshielded locations (e.g., AFF).

#### 5.5.1.2.1 Instrument Loop Check On Gamma Instruments (Surveillance Requirement)

This loop check is intended to detect a gross failure of the instruments between the applicable calibrations. Failure of the loop check shall require declaring the instrument inoperable. The surveillance frequency should be sufficient to monitor adverse trends in instrumentation performance. The surveillance frequency shall consider the SIL verification calculation for the instrument loop (J-CLC-J-00018, *BDT High Gamma Interlock SIL Verification Calculation*[13]), which was developed based on vendor documentation.

#### 5.5.1.2.2 Quantitative Check on Gamma Instruments (Surveillance Requirement)

This surveillance ensures an appropriately accurate response of the credited gamma instrument to a known source of radiation. The surveillance will also ensure that the SIS status lights appropriately respond upon reaching the high gamma setpoint. The surveillance frequency shall be within the time documented in the SIL verification calculation (J-CLC-J-00018[13]) which was developed based on vendor documentation. Periodic performance of this surveillance ensures that the installed instrument can perform its intended safety function.

#### 5.5.1.2.3 Test of High Gamma Interlocks (Surveillance Requirement)

This surveillance shall ensure that the appropriate safety shutdown contactors for the BDT Transfer Pumps open when commanded by the SIS. The surveillance frequency shall be within the time documented in the SIL verification calculation (J-CLC-J-00018[13]) which was developed based on vendor documentation. Periodic performance of this surveillance ensures that adverse trends in instrumentation performance are monitored.

### 5.5.1.3 FFT-A and SSRT High Temperature Interlocks (LCO 3.1.3)

Chapter 3.0 credits the tank temperature interlocks with stopping the filter recirculation pumps when the associated tank temperature (i.e., FFT-A [TK-102] or SSRT [TK-104]) reaches the setpoint. This interlock prevents the recirculation pumps from continuously performing work on the waste in filter loop while the temperature in the associated process vessel is too high. Continuing to operate the filter recirculation pump without sufficient heat removal from either the heat exchanger in the loop or the cooling coils on the tank can increase the temperature of the waste in the FFT-A (TK-102) or SSRT (TK-104) because most or all of the flow from the filter loop is normally returned to the source tank. The temperature of the waste in the tank must be low enough that, during a 10-day period without ventilation or tank cooling, the waste

temperature will not reach its flash point and the waste will not reach the temperature at which the solvent's equilibrium vapor pressure will be high enough to reduce the time to reach CLFL below its analyzed value.

This LCO requires that the tank temperature instrument loops and high temperature interlock be operable with a setpoint less than or equal to 117 degrees Fahrenheit (°F) for FFT-A (TK-102) and 108°F for SSRT (TK-104), both adjusted for instrument uncertainty (S-RPT-J-00011[6]; and S-CLC-J-00033, *Time to Reach the Composite Lower Flammability Limit (CLFL) for SWPF Process Vessels*[14]).

This LCO is applicable during Operation and Shutdown Modes.

#### 5.5.1.3.1 Instrument Loop Check on Temperature Instruments (Surveillance Requirement)

This loop check is intended to detect a gross failure of the instruments between the applicable calibrations. Failure of the loop check shall require declaring the instrument inoperable. The surveillance frequency shall be adequate to monitor adverse trends in instrumentation performance. The surveillance frequency shall also consider the SIL verification calculations for the instrument loops (J-CLC-J-00016, *SIL Verification Calculation for FFT-A Tank Temp Interlock to Filter Recirculation Pumps*[15]; and J-CLC-J-00017, *SIL Verification Calculation for SSRT Tank Temp Interlock to Filter Recirculation Pump*[16]) which were developed based on vendor documentation.

#### 5.5.1.3.2 Instrument Loop Calibration on Temperature Instruments (Surveillance Requirement)

This surveillance ensures calibration of the credited temperature instrument, and that the associated instrumentation reads within the calculated calibration tolerances from the uncertainty calculation. The loop calibration will also ensure that the SIS status lights appropriately respond upon reaching the high temperature setpoint. The surveillance frequency shall be within the time documented in the uncertainty analysis (J-CLC-J-00187, *Instrument Loop Uncertainty for SS 3144P (HART) Temperature Transmitters*[17]) and the SIL verification calculations (J-CLC-J-00016[15] and J-CLC-J-00017[16]). This periodic surveillance helps to ensure that the installed instrument can perform its intended safety function.

#### 5.5.1.3.3 Test of High Temperature Interlocks (Surveillance Requirement)

This surveillance shall ensure that the appropriate safety shutdown contactors for the Filter Recirculation Pumps open when commanded by the SIS. The surveillance frequency shall be within the time documented in the SIL verification calculations (J-CLC-J-00016[15] and J-CLC-J-00017[16]) which was developed based on vendor documentation. Periodic performance of this surveillance ensures that adverse trends in instrumentation performance are monitored.

#### 5.5.1.4 AST-A, FFT-A, SSRT, SSFT, WWHT, and SEHT Tank Temperature (LCO 3.1.4)

Subchapter 3.4.1.3 contains an input and assumption that the temperature of the vessel contents are bounded by the analyzed values at the time cooling, ventilation, and purge are lost. This initial condition is pertinent to the flammability analysis for explosion events (S-RPT-J-00011[6], S-CLC-J-00033[14]). Increasing temperature is assumed to result in higher concentrations of CSSX solvent in the vapor space of vessels. Tank temperatures outside the range evaluated for a 10-day adiabatic heatup could result in shorter times to reach CLFL following a loss of purge and higher required purge flow rates. The six vessels that this LCO applies to are the large-volume vessels in the Process Vessel Cells that normally contain the majority of the radioactive material inventory within SWPF.

This LCO requires that tank temperatures be less than or equal to 92°F for AST-A (TK-101), FFT-A (TK-102), SSRT (TK-104), and SSFT (TK-109); 82°F for SEHT (TK-205); and 95°F for WWHT (TK-105); all adjusted for instrument uncertainty.

This LCO is applicable during Operation and Shutdown Modes.

##### 5.5.1.4.1 Verification of Tank Temperature (Surveillance Requirement)

This surveillance requires the operator to compare a tank temperature measurement against the allowed limit for the parameter for each tank listed in the LCO. It is normally performed based on a reading from an operable tank temperature instrument. The surveillance frequency shall be based on engineering judgment and shall take into consideration the availability of non-SS tank temperature alarms on the Basic Process Control System (BPCS).

#### 5.5.1.5 AST-A, FFT-A and SSRT Tank Agitation (LCO 3.1.5)

Subchapter 3.4 requires that the assumed IC that process vessels containing solids are mixed be protected. Routinely mixing solids in the vessels limits the potential accumulation of $H_2$ in settled solids in AST-A (TK-101), FFT-A (TK-102), and SSRT (TK-104) avoiding a rapid release of the trapped gas that could result in an unacceptable increase in the flammable vapor concentration. In order to prevent accumulation of $H_2$ in settled solids, this LCO requires that the APAs be operating. This LCO implements the Specific Administrative Control (SAC) on the Tank Agitation Program for AST-A (TK-101), FFT-A (TK-102), and SSRT (TK-104).

The flammability calculations supporting the Safety Basis (S-RPT-J-00011[6], S-CLC-J-00033[14]) do not explicitly differentiate between $H_2$ generated within the liquid waste that moves freely with the liquid fraction of the waste and continually evolves into the tank headspace when the liquid's solubility limit for $H_2$ is exceeded and the $H_2$ generated within the settled solids that may accumulate in bubbles until released at a later time. The SWPF Safety Basis conservatively assumes for the purposes of this LCO's surveillance frequencies and completion times that 100% of the $H_2$ generated at any location within the waste is retained in the settled solids within the tank, and that 100% of the trapped gas may be released when the settled solids are subsequently disturbed.

The accident analysis supporting this DSA shows that the minimum time to reach CLFL following a loss of all purge sources in the AST-A (TK-101), FFT-A (TK-102), and SSRT (TK-104) is at least 10 days (S-RPT-J-00011[6], S-CLC-J-00033[14]). Therefore, it is not possible for $H_2$ bubbles to build up within any settled solids at the bottom of a tank within 10 days following a loss of agitation to the point where their subsequent release would cause the tank headspace to reach 100% of the CLFL. This LCO is structured such that the sum of the time to detect a loss of tank agitation (i.e., 1.25 Days based on the frequency of surveillance 4.1.5.1 and 4.1.5.2) and the time to take action to mix the tank per the required actions is less than the minimum time of 10 days to reach flammable conditions from the accident analysis by an appropriate amount.

This LCO applies during Operation and Shutdown Modes, while tank liquid volume is sufficient to contain the amount of solids capable of trapping enough $H_2$ that, if released, could cause the corresponding tank vapor space volume to reach the CLFL.

#### 5.5.1.5.1 Verification that APAs are Operating (Surveillance Requirement)

This surveillance is performed by verifying that the APAs are operating per the requirements of this LCO. This requires the operators to utilize the BPCS to confirm the appropriate indications on the APA's faceplates. Administrative Control 5.8.2.15 is relied on to ensure that the BPCS software is maintained consistent with the programming that was determined to result in adequate mixing of the tanks during testing.

The surveillance frequency shall be based on engineering judgment and shall be sufficient to detect abnormal operation of the APAs prior to the accumulation of a significant amount of trapped gases within the resulting settled solids.

#### 5.5.1.5.2 Verification of Pulse Mixer Ventilation System Header Vacuum (Surveillance Requirement)

This surveillance requires the operator to compare a Pulse Mixer Ventilation System (PMVS) header vacuum measurement against the allowed limit for the parameter. It is normally performed based on a reading from a functional header vacuum instrument. The surveillance frequency shall be consistent with the preceding surveillance.

#### 5.5.1.5.3 Verification of APA Operating Mode (Surveillance Requirement)

This surveillance is performed by verifying that the APAs equipment module on the BPCS has the appropriate Present Value (i.e., Lift/Pulse, Lift/Drop, Lift/Drop-Low) based on the current level in the tank.

#### 5.5.1.5.4 Verification of APA Valve Positioner Operation (Surveillance Requirement)

This surveillance is performed by verifying that the APA valve positioners receive commands from the BPCS to open/close in the correct sequence for the current APA equipment module Present Value (i.e., Lift/Pulse, Lift/Drop, Lift/Drop-Low) and that the valve position indication at the positioner reflects valve movement.

#### 5.5.1.5.5 Verification of Compressed Air Flow to Pulse Pots (Surveillance Requirement)

This surveillance is performed by verifying that air is moving through the APA supply piping between the APA Charge Tank pressure control valve and the APA enclosure wall. The statement of the surveillance in the TSRs allows one of several methods to be selected to verify the movement of air. Surveillances four through six for this LCO provide a gross check that the APA equipment module in the BPCS is controlling key APA components consistent with its intended programming. The surveillance interval for items that may be performed via field checks may be twice the interval of the APA surveillances done from the BPCS in the Control Room based on the ability of the BPCS to detect most valve failures and the reliability of actuated valves.

#### 5.5.1.5.6 Verification of Proper Actuated Valve Alignment (Surveillance Requirement)

This surveillance is performed by verifying that the positioners for the actuated valves listed below show the correct valve position for the current APA equipment module Present Value (i.e., Lift/Pulse, Lift/Drop, Lift/Drop-Low). This surveillance is applicable to:

- APA Pulse Pot Block Valves
- Tank Atmosphere Isolation Valve
- Compressed Air Isolation Valve

#### 5.5.1.5.7 Verification of Manual Valve Alignment (Surveillance Requirement)

This surveillance is performed by verifying that each manual valve associated with the APAs within the APA enclosure is open. This SR is not applicable to valves that are locked, sealed, or otherwise secured in position. The surveillance frequency shall be based on engineering judgment and will consider the ability of the Conduct of Operations Program to minimize the frequency of inadvertent damper/valve manipulations.

### 5.5.2 CPA Ventilation TSR Derivation

#### 5.5.2.1 Process Vessel Ventilation System (LCO 3.2.1)

Chapter 3.4 credits the IC of a low flammable vapor concentration in process vessels prior to certain events. The initial low flammable vapor concentration ensures that flammable/explosive conditions will not be reached in the process vessels within the time periods analyzed.

To ensure that Operators are aware of the status of the ventilation flow through each vessel (provided by the Process Vessel Ventilation System [PVVS]), the PVVS header vacuum sensor is credited with providing input to a low-vacuum alarm in the CR. Because there are limited isolation points between the PVVS header and tanks that the header is credited with purging, the presence of sufficient vacuum in the header is an indication of sufficient purge flow through the vessels. The required vacuum setting, in combination with sizing of the orifice in the line between each vessel's vapor space and the surrounding cell, ensures that the flow rate of air

drawn through each process vessel is at least the minimum flow needed to maintain the vessel vapor space at or below 25 percent (%) of the CLFL (00-700-26405, *Comparison of Available Flow and Required Flow through PVVS Orifices*[18]; and M-CLC-J-00134, *Process Vessel Ventilation System Sizing Calculation*[19]). The flow rate requirement for each individual tank is calculated in S-CLC-J-00042, *Process Vessel Air Purge Flowrates*[20], and summarized in 00-700-17240, *Air Purge Flow Requirements for Backup Air Receiver Tanks (Tk-505 and Tk-506*[21]). These flow rates were confirmed to be more conservative than the flow rates for individual tanks resulting from the evaluation of the Liquid Waste System hydrogen generation rate Potential Inadequacy in Safety Analysis (PISA) including the effects of the Cs-137 and Strontium (Sr)-90 feed restrictions (S-RPT-J-00011[6]). The rapid Operator notification of a low-flow condition provided by the low-vacuum alarm ensures that Operators have sufficient time to respond to the loss of flow, preventing flammable/explosive conditions from being reached. The limited isolation points between the vacuum sensing point of the PVVS header and the supported tanks consist of three manual isolation dampers. The positions of these dampers are controlled through the Conduct of Operations Program to ensure that they allow the PVVS to perform its credited function. If any of the dampers were inadvertently closed, all tanks connected to the isolated portion of the system would experience a loss of vacuum, resulting in numerous CR alarms received on the BPCS.

Chapter 3.0 also credits the High-Efficiency Particulate Air (HEPA) filters of the PVVS with preventing an unfiltered airborne release in process vessels from reaching workers.

This LCO requires that the PVVS be operable. An operable PVVS includes:

- An operating exhaust fan;
- An on-line exhaust HEPA filter with an efficiency greater than or equal to 99%;
- HEPA filter differential pressure (dP) instruments and associated CR alarms with a high dP setpoint less than or equal to 4 in water ($H_2O$), adjusted for instrument uncertainty; and
- PVVS header vacuum instrument and associated CR alarm with setpoints greater than or equal to 10 in $H_2O$, adjusted for instrument uncertainty.
- PVVS header vacuum and exhaust secondary HEPA filter dP shall be within limits.

This LCO is applicable during Operation and Shutdown Modes.

The required value of 10 in $H_2O$ vacuum is based on the header vacuum necessary to establish the necessary flow rates from the cells into the tanks, as evaluated in M-CLC-J-00134[19].

The HEPA dP limit of this LCO is based on the maximum dP of 4.0 in $H_2O$ recommended by the manufacturer (EQIP-HVAC-005, *HEPA Filters Product & Product Drawing*[22]).

The minimum HEPA filter efficiency of 99% is based on providing a reduction of two orders of magnitude in the amount of radiological material released for applicable accidents.

#### 5.5.2.1.1 Verification that PVVS Fan is Running (Surveillance Requirement)

This fan status check provides direct confirmation that a PVVS exhaust fan is operating. Periodic performance of this item is appropriate because a low PVVS header vacuum alarm will be received in the CR via the SIS shortly after terminating fan operation.

#### 5.5.2.1.2 Verification of Final HEPA Filter dP (Surveillance Requirement)

This surveillance requires the operator to compare a dP measurement for the final HEPA filter element against the allowed limit for the parameter. It is normally performed based on a reading from an operable dP instrument. Periodic performance of this item is appropriate because a dP reading greater than the allowed limit will normally cause an alarm in the CR via the SIS.

#### 5.5.2.1.3 Verification of PVVS Header Vacuum (Surveillance Requirement)

This surveillance requires the operator to compare a PVVS header vacuum measurement against the allowed limit for the parameter. It is normally performed based on a reading from an operable vacuum instrument. Periodic performance of this item is appropriate because a vacuum reading outside of the allowed limit will normally cause an alarm in the CR via the SIS.

#### 5.5.2.1.4 Instrument Loop Calibration on Final HEPA Filter dP Instrument (Surveillance Requirement)

This surveillance ensures calibration of the credited instrument, and that the associated instrumentation reads within the calculated calibration tolerances. The loop calibration will also ensure that the SIS status lights appropriately respond upon reaching the high dP setpoint and that a CR alarm is received. The surveillance frequency shall be within the time documented in the uncertainty analysis (J-CLC-J-00188, *Instrument Loop Uncertainty for Range 1 SS 3051S (HART) Pressure Transmitters*[23]) which was developed based on vendor documentation. The periodic calibration helps to ensure that the installed instrument can perform its intended safety function.

#### 5.5.2.1.5 Instrument Loop Calibration on PVVS Header Vacuum Instrument (Surveillance Requirement)

This surveillance ensures calibration of the credited instrument, and that the associated instrumentation reads within the calculated uncertainty. The loop calibration will also ensure that the SIS status lights appropriately respond upon reaching the low vacuum setpoint and that a CR alarm is received. The surveillance frequency shall be within the time documented in the uncertainty analysis (J-CLC-J-00188[23]) which was developed based on vendor documentation. The periodic calibration helps to ensure that the installed instrument can perform its intended safety function.

#### 5.5.2.1.6 HEPA Filter Performance Test (Surveillance Requirement)

A minimum HEPA filter efficiency of 99% provides a reduction of two orders of magnitude in the amount of radiological material released for applicable accidents. Therefore, initial and periodic HEPA filter performance testing shall be performed to ensure a filter efficiency of 99% or better. The surveillance frequency shall include consideration of the guidance in American National Standards Institute/American Society of Mechanical Engineers (ANSI/ASME) N510-1989 (R1995), *Testing of Nuclear Air Treatment Systems*[24].

### 5.5.2.2 Process Building Ventilation System (LCO 3.2.2)

Chapter 3.0 credits the Process Building Ventilation System (PBVS) with ensuring that non-negligible releases from non-Natural Phenomena Hazard (NPH) events within the CPA are confined and filtered. To achieve this function, the PBVS exhaust fans draw air from the building locations with the highest potential for airborne contamination (Zone 1). The resulting negative pressures within Zone 1 cause the transfer of air from Zone 2 into Zone 1 via HEPA filters and ductwork into the Zone 1 process cells. The PBVS exhaust fans are credited with maintaining all Zone 1 areas at a negative pressure, with respect to the Zone 2 areas. The PBVS also maintains Zone 2 areas in which non-negligible releases could occur (e.g., P&VGs) at a negative pressure, with respect to the normally occupied Zone 3 areas and the environment.

To ensure that Operators are aware of the status of the ventilation flow through each cell (provided by the PBVS), the flow indicator for each process cell is credited with providing input to a low-flow alarm in the CR.

This LCO requires that the PBVS be operable. An operable PBVS includes:

- An operating exhaust fan;
- Backflow dampers at interfaces between the PBVS and the Pulse Mixer Ventilation System (PMVS) and Analytical Laboratory Ventilation Systems;
- On-line exhaust HEPA filters with an efficiency greater than or equal to 99%;
- Cell inlet HEPA filters with an efficiency greater than or equal to 99%;
- HEPA filter dP instruments and associated CR alarms with setpoints less than or equal to 4 in $H_2O$, adjusted for instrument uncertainty;
- Process cell air flow instrument loops and associated CR alarms with setpoints greater than or equal to 30% of the full-scale reading for the flow instrument (J-CLC-J-00189, *Instrument Loop Uncertainty for SS HVAC Flow Instrument Loops*[25]), adjusted for instrument uncertainty;
- dP instruments that monitor pressure in the Zone 1 areas, including CR alarms with setpoints greater than or equal to 1 in $H_2O$ vacuum, adjusted for instrument uncertainty; and

- dP instruments that monitor pressure in the P&VGs, Drum Off/Decon Area, and CSSX Contactor areas in Zone 2, including CR alarms with setpoints greater than or equal to 0.15 in $H_2O$ vacuum, adjusted for instrument uncertainty.

This LCO is applicable during Operation and Shutdown Modes.

The HEPA dP limit of this LCO is based on the maximum dP of 4.0 in $H_2O$ recommended by the manufacturer ( EQIP-HVAC-005[22]). The Zone 1 and Zone 2 low vacuum alarm setpoint limits of 1 in $H_2O$ vacuum and 0.15 in $H_2O$ vacuum, respectively, are based on alerting the operators that the vacuum has decreased significantly below its nominal operating value of 3.0 in $H_2O$ for Zone 1 or 0.3 in $H_2O$ for Zone 2. The safety analysis did not specify an exact value of concern for the area vacuums, and a value of 1.0 and 0.15 in $H_2O$ was selected based on providing an adequate margin from the nominal parameter design operating point to avoid nuisance alarms, while maintaining adequate vacuum in the area such that there are no significant flow reversals between ventilation zones.

The process cell exhaust flow limit of 30% of the full-scale reading of the flow instrument (equates to >35% of the design flow rate for each cell) is based on ensuring that sufficient flow exists for accurate measurement. The safety analysis did not specify an exact value of concern for the exhaust flow, and a value of 30% of the full-scale reading was selected based on providing an adequate margin from the nominal parameter design operating point to avoid nuisance alarms.

The minimum HEPA filter efficiency of 99% is based on providing a reduction of two orders of magnitude in the amount of radiological material released for applicable accidents.

#### 5.5.2.2.1 Verification that PBVS Exhaust Fan is Running (Surveillance Requirement)

This fan status check provides direct confirmation that a PBVS exhaust fan is operating. The surveillance frequency shall be based on engineering judgment, and includes consideration of the availability of a low flow alarms and low vacuum alarms that will be received shortly after terminating fan operation.

#### 5.5.2.2.2 Verification of Key Zone 2 Vacuum (Surveillance Requirement)

This surveillance requires the operator to compare a vacuum measurement for the key Zone 2 areas against the allowed limit for the parameters. It is normally performed based on a reading from an operable vacuum instrument. Periodic performance of this item is appropriate because a vacuum reading outside of the allowed limit will normally cause an alarm in the CR via the SIS.

#### 5.5.2.2.3 Verification of Zone 1 Vacuum (Surveillance Requirement)

This surveillance requires the operator to compare a vacuum measurement for the Zone 1 areas against the allowed limit for the parameters. It is normally performed based on a reading from an operable vacuum instrument. Periodic performance of this item is appropriate because a vacuum reading outside of the allowed limit will normally cause an alarm in the CR via the SIS.

#### 5.5.2.2.4 Verification of Cell Exhaust Flow (Surveillance Requirement)

This surveillance requires the operator to compare an exhaust flow measurement for the Process Cells against the allowed limit for the parameters. It is normally performed based on a reading from an operable flow instrument. Periodic performance of this item is appropriate because a flow reading less than the allowed limit will normally cause an alarm in the CR via the SIS.

#### 5.5.2.2.5 Verification of HEPA Filter dP (Surveillance Requirement)

This surveillance requires the operator to compare a filter dP measurement for online PBVS exhaust secondary HEPA filters and cell inlet HEPA filters against the allowed limit for the parameters. It is normally performed based on a reading from an operable dP instrument. Periodic performance of this item is appropriate because a dP reading greater than the allowed limit will normally cause an alarm in the CR via the SIS.

#### 5.5.2.2.6 Verification of HEPA Filter Sectionalizing Damper Position (Surveillance Requirement)

This surveillance ensures that the sectionalizing dampers in the HEPA filter housings for the cell inlet HEPAs are open. Closing the sectionalizing dampers will result in decreased accuracy of the HEPA filter dP instruments, since the instruments will effectively be averaging idle filter elements with zero dP along with the online filter elements. The surveillance frequency shall be based on engineering judgment and will consider the ability of the Conduct of Operations Program to minimize the frequency of inadvertent damper/valve manipulations.

#### 5.5.2.2.7 Instrument Loop Calibration on HEPA Filter dP Instrument (Surveillance Requirement)

This surveillance ensures calibration of the credited instruments, and that the associated instrumentation reads within the calculated uncertainty. The loop calibration will also ensure that the SIS status lights appropriately respond upon reaching the setpoint and that a CR alarm is received. The surveillance frequency shall be within the time documented in the uncertainty analysis (J-CLC-J-00188[23]) which was developed using vendor documentation. The periodic calibration helps to ensure that the installed instrument can perform its intended safety function.

#### 5.5.2.2.8 Instrument Loop Calibration on Zone 1 and Zone 2 dP Instruments (Surveillance Requirement)

This surveillance ensures calibration of the credited instruments, and that the associated instrumentation reads within the calculated uncertainty. The loop calibration will also ensure that the SIS status lights appropriately respond upon reaching the setpoint and that a CR alarm is received. The surveillance frequency shall be within the time documented in the uncertainty analysis (J-CLC-J-00188[23]) which was developed based on vendor documentation. The periodic calibration helps to ensure that the installed instrument can perform its intended safety function.

#### 5.5.2.2.9 Instrument Loop Calibration on Cell Exhaust Flow Instruments (Surveillance Requirement)

This surveillance ensures calibration of the credited instruments, and that the associated instrumentation reads within the calculated uncertainty. The loop calibration will also ensure that the SIS status lights appropriately respond upon reaching the setpoint and that a CR alarm is received. The surveillance frequency shall be within the time documented in the uncertainty analysis (J-CLC-J-00189[25]) which was developed based on vendor documentation. The periodic calibration helps to ensure that the installed instrument can perform its intended safety function.

#### 5.5.2.2.10 Functional Test of Backdraft Dampers (Surveillance Requirement)

The backflow dampers between the PBVS and interfacing systems are credited with preventing gross reverse flow from the PBVS exhaust duct to non-SS SSCs during a ventilation system upset or abnormal alignment. The functional test of the backflow dampers is required to demonstrate that the blades are able to move to their seat when the respective exhaust fans are stopped or when an upstream damper in the interfacing system is closed. There is no need to quantify the seat leakage for the backflow damper. The surveillance frequency considered vendor documentation for the component; however, the vendor did not identify the need for any periodic functional checks (EQIP-HVAC-006, *Dedication/Seismic Plan for Safety Significant Ruskin Model NRBD-100 Backdraft Discharge Dampers*[26]).

#### 5.5.2.2.11 HEPA Filter Performance Test (Surveillance Requirement)

A minimum HEPA filter efficiency of 99% provides a reduction of two orders of magnitude in the amount of radiological material released for applicable accidents. Therefore, initial and periodic HEPA filter performance testing shall be performed to ensure a filter efficiency of 99% or better. The surveillance frequency shall include consideration of the guidance in ANSI/ASME N510-1989 (R1995)[24].

### 5.5.2.3 Hot Cell Exhaust HEPAs (LCO 3.2.3)

Chapter 3.0 identifies that the ability of the Analytical Laboratory Ventilation System to ensure that non-negligible releases from non-NPH events within the Hot Cell and Sampler Gloveboxes are confined and filtered provides significant DID, and therefore the SSCs are elevated to a functional classification of SS. To ensure that unfiltered releases from the Hot Cells and Sampler Gloveboxes do not occur, this LCO requires that the online HEPA filters in the Hot Cell ventilation exhaust flow path be operable. This LCO also requires that a high dP alarm for the online HEPA filter be operable.

This LCO is applicable during Operation and Shutdown Modes.

#### 5.5.2.3.1 Verification of Final HEPA dP (Surveillance Requirement)

This surveillance requires the operator to compare a filter dP measurement for the online Hot Cell exhaust secondary HEPA filters against the allowed limit for the parameter. It is normally

performed based on a reading from an operable dP instrument. Periodic performance of this item is appropriate because a dP reading greater than the allowed limit will normally cause an alarm in the CR via the SIS.

#### 5.5.2.3.2 Instrument Loop Calibration on Final HEPA dP Instrument (Surveillance Requirement)

This surveillance ensures calibration of the credited instrument, and that the associated instrumentation reads within the calculated uncertainty. The loop calibration will also ensure that the SIS status lights appropriately respond upon reaching the setpoint and that a CR alarm is received. The surveillance frequency shall be within the time documented in the uncertainty analysis (J-CLC-J-00188[23]) which was developed based on vendor documentation. The periodic calibration helps to ensure that the installed instrument can perform its intended safety function.

#### 5.5.2.3.3 HEPA Filter Performance Test (Surveillance Requirement)

A minimum HEPA filter efficiency of 99% provides a reduction of two orders of magnitude in the amount of radiological material released for applicable accidents. Therefore, initial and periodic HEPA filter performance testing shall be performed to ensure a filter efficiency of 99% or better. The surveillance frequency shall include consideration of the guidance in ANSI/ASME N510-1989 (R1995)[24].

### 5.5.2.4 Hot Cell Low Vacuum Interlock (LCO 3.2.4)

Chapter 3.0 credits the Hot Cell low vacuum interlock with sensing a low vacuum in the Laboratory Hot Cell, and automatically stopping sample flow from selected sources to the laboratory by stopping all sample pumps in the CPA. Similar interlocks are credited for Gloveboxes 8 and 9 which are addressed in Subchapter 5.5.4.4.

This LCO requires that the Hot Cell vacuum instrument loop and low vacuum interlock be operable with a setpoint less than or equal to 1 in $H_2O$, adjusted for instrument uncertainty. The setpoint for the vacuum instrument is based on alerting the operators that the vacuum has decreased significantly below its nominal operating value of 3 in $H_2O$. The safety analysis did not specify an exact value of concern for the Hot Cell vacuum, and a value of 1 in $H_2O$ was selected based on consideration of having an adequate margin between the nominal design vacuum of the Hot Cell (3 in $H_2O$) and the trip setpoint to minimize the number of nuisance trips due to normal operational transients while also maintaining the Hot Cell vacuum sufficiently above that of the Gloveboxes to minimize the likelihood of flow reversals.

This LCO is applicable during Operation and Shutdown Modes, while operation of the CPA sample pumps is not inhibited.

#### 5.5.2.4.1 Verification of Hot Cell Vacuum (Surveillance Requirement)

This surveillance requires the operator to compare a Hot Cell vacuum measurement against the allowed limit for the parameter. It is normally performed based on a reading from an operable

vacuum instrument. Periodic performance of this item is appropriate because a vacuum reading outside of the allowed limit will normally cause an alarm in the CR via the SIS.

#### 5.5.2.4.2 Instrument Loop Calibration on Hot Cell Vacuum Instrument (Surveillance Requirement)

This surveillance ensures calibration of the credited vacuum instrument, and that the associated instrumentation reads within the calculated uncertainty. The loop calibration will also ensure that the SIS logic solver appropriately responds upon reaching the low vacuum setpoint. The surveillance frequency shall be within the time documented in the uncertainty analysis (J-CLC-J-00188[23]) and the SIL verification calculation (J-CLC-J-00010, *Hot Cell Low Vacuum Interlock SIL Verification Calculation*[27]) which were developed using vendor documentation. The periodic calibration helps to ensure that the installed instrument can perform its intended safety function.

#### 5.5.2.4.3 Test of Hot Cell Low Vacuum Interlock (Surveillance Requirement)

This surveillance shall ensure that the appropriate safety shutdown contactor and shunt trip breaker for the CPA sample pumps open when commanded by the SIS. The surveillance frequency shall be within the time documented in the SIL verification calculation (J-CLC-J-00010[27]) that was developed using vendor documentation. Periodic performance of this surveillance ensures that adverse trends in instrumentation performance are monitored.

### 5.5.3 CPA Flammability Prevention TSR Derivation

#### 5.5.3.1 Air Dilution System (LCO 3.3.1)

Chapter 3.0 credits the Air Dilution System (ADS) with maintaining an air purge to select vessels at a rate sufficient to maintain the vessel vapor spaces below flammable conditions. The flow rate requirement for each individual tank is calculated in S-RPT-J-00011[6].

The back-up air receivers for the ADS are sized to supply the required flow to the system loads for at least four days after an event that causes a loss of the normal air supply to the ADS. The ADS automatically switches to the credited back-up supply upon loss of the non-credited normal supply, causing a drop in the ADS distribution header pressure equal to the difference in the typical settings for the pressure control valves from the respective sources.

For the Solvent Drain Tank (TK-208), Solvent Hold Tank (SHT) (TK-202), Solvent Strip Feed Tank (TK-217), DSS Coalescer (TK-201), and CSSX contactor vent header, Chapter 3.0 also credits the ADS with maintaining the flammable vapor concentrations at a low fraction of the CLFL. The SHT (TK-202), Solvent Strip Feed Tank (TK-217), DSS Coalescer (TK-201), and CSSX contactor vent header have a single ADS flow path with flows set to meet the higher of the two requirements. The ADS provides two flow paths to the Solvent Drain Tank (TK-208). One flow path to the Solvent Drain Tank (TK-208) (adequate to maintain below flammable conditions) is from the ADS distribution header. The second flow path to the Solvent Drain Tank (TK-208) (adequate to maintain 25% of the CLFL) is supplied only from the normal plant air supply and cannot be aligned to the back-up air supply.

This LCO requires that the ADS be operable. An operable ADS includes:

- A back-up air supply with an inventory sufficient for at least four days;
- A pressure instrument and associated CR alarm monitoring Back-up Air Receiver pressure with an alarm setpoint greater than or equal to 2,335 pounds per square inch gauge (psig) (S-CLC-J-00143, *Capacity of Backup Air Receiver Tanks [TK-505 and TK-506]*[28]), adjusted for instrument uncertainty;
- A pressure instrument and associated CR alarm at the discharge of the pressure regulators for the back-up air supply to the ADS with an alarm setpoint greater than or equal to 20 psig, adjusted for instrument uncertainty;
- A pressure instrument and associated CR alarm at the discharge of the pressure regulators for the plant air system supply to the ADS with an alarm setpoint greater than or equal to 30 psig, adjusted for instrument uncertainty;
- A flow indicating controller (e.g., rotameter) for each vessel supplied from the ADS set within the required range (the minimum value for flow will differ for the lowest ranges of rotameters, dependent on the supply source);
- A second flow indicating controller (e.g., rotameter) for the Solvent Drain Tank (TK-208) set within the required range , supplied with air from a source that cannot be aligned to the Back-Up Air Receivers; and
- Pressure regulators for the back-up air supply.

This LCO also requires that the Plant Air pressure to the ADS distribution header be less than or equal to 70 psig, adjusted for instrument uncertainty. This provides an upper limit on the ADS distribution header pressure prior to its realignment to the Backup Air Receivers, which limits the decrease in header pressure when the ADS shifts to the Backup Air Receivers. Limiting this pressure decrease limits the magnitude of flow decreases that occur in the lowest range rotameters and the flow increases that occur in the highest range rotameters that can be realigned to the Backup Air Receivers.

The alarm setpoint of 20 psig for the back-up air supply to the ADS is based on the minimum pressure of 15 psig necessary to provide flow to the rotameters through the Model FC 8812 integral flow controllers (EQIP-UTIL-006, *Brooks Flow Controllers*[29]). This pressure bounds the pressure needed to provide flow through the Model FC 8800 integral flow controllers associated with the majority of ADS rotameters.

The alarm setpoint of 30 psig for the plant air system supply to the ADS is based on the minimum pressure of 25 psig necessary to provide flow to the rotameters through the Model FC 8830 integral flow controllers (EQIP-UTIL-006[29]).

This LCO is applicable during Operation and Shutdown Modes.

#### 5.5.3.1.1 Verification of ADS Flow to Individual Process Vessels (Surveillance Requirement)

Verifying that air flow to the individual process vessels is within limits by reading the local flow indicators ensures that: 1) the process vessels are receiving sufficient air flow to prevent reaching the flammable vapor concentration limits (S-RPT-J-00011[6]), and 2) the flow rate is no more than that assumed in sizing the Backup Air Receivers (J-CLC-J-00202, *Uncertainty for SS Flow Meters*[30]), such that the 4-day inventory is protected. The surveillance frequency shall be based on engineering judgment and considered adequate to monitor adverse trends in instrumentation performance.

#### 5.5.3.1.2 Verification of Plant Air Pressure to ADS (Surveillance Requirement)

This surveillance requires the operator to compare a pressure measurement downstream of the pressure regulators for the plant air supply to ADS against the allowed limits for that parameter. It is normally performed based on a reading from the installed pressure transmitter. Periodic performance of this item is appropriate because a pressure reading less than the minimum allowed limit will normally cause an alarm in the CR via the SIS, and a pressure reading greater than the maximum allowed limit will normally cause an alarm in the CR via the BPCS.

#### 5.5.3.1.3 Verification of Back-up Air Pressure to ADS (Surveillance Requirement)

This surveillance requires the operator to compare a pressure measurement downstream of the pressure regulators for the back-up air supply to ADS against the allowed limit for that parameter. It is normally performed based on a reading from the installed pressure transmitter. Periodic performance of this item is appropriate because a pressure reading less than the allowed limit will normally cause an alarm in the CR via the SIS.

#### 5.5.3.1.4 Verification of Back-up Air Receiver Pressure (Surveillance Requirement)

This surveillance requires the operator to compare a pressure measurement of the Back-up Air Receivers against the allowed limit for that parameter. It is normally performed based on a reading from the installed pressure transmitter. Periodic performance of this item is appropriate because a pressure reading less than the allowed limit will normally cause an alarm in the CR via the SIS.

#### 5.5.3.1.5 Verification of Valve Positions (Surveillance Requirement)

This surveillance ensures that each manual valve along the flowpath from the Backup Air Receivers to the destination vessels/components that is not locked, sealed, or otherwise secured in position, is in the correct position. The manual valves associated with this surveillance are those with the potential to do one of the following:

- Obstruct flow along the required path in a manner not evident to operators, or
- Allow excessive system leakage.

The surveillance frequency shall be based on engineering judgment and will consider the ability of the Conduct of Operations Program to minimize the frequency of inadvertent damper/valve manipulations.

#### 5.5.3.1.6 Instrument Loop Calibration of Pressure Instruments (Surveillance Requirement)

This surveillance ensures calibration of the credited pressure instrument, and that the associated instrumentation reads within the calculated uncertainty. The loop calibration will also ensure that the SIS logic solver appropriately responds upon reaching the setpoint and that a CR alarm is received. The surveillance frequency shall be within the time documented in the uncertainty analysis (J-CLC-J-00191, *Instrument Loop Uncertainty for SS 3051S TG [HART] Pressure Transmitters*[31]) which was developed using vendor documentation. The periodic calibration helps to ensure that the installed instrument can perform its intended safety function.

#### 5.5.3.1.7 Functional Check of Pressure Regulators (Surveillance Requirement)

This surveillance ensures that the pressure regulators in the back-up air supply to the ADS distribution header can perform their required function. The functional check can be performed by placing the back-up air supply in service (e.g., isolating the plant air supply to ADS) and verifying that the steady-state pressure from the back-up pressure regulators is within 5 psi of the target value at nominal flow rates. The surveillance frequency is based on engineering judgment and considered adequate to monitor adverse trends in component performance. The surveillance frequency also considered vendor documentation for the component; however, the vendor did not identify the need for any periodic function checks (EQIP-UTIL-005, *Cashco PCV IOM*[32]).

#### 5.5.3.1.8 Verification of System Capacity (Surveillance Requirement)

This test shall ensure that the ADS is capable of supplying air for the required duration of four days relying solely on the backup air receivers. The test may be performed by isolating the Plant Air supply to the system and other makeup sources of compressed air, and trending system parameters over a duration sufficient to establish the air usage rate. Alternatively, the test may be performed by individually leak testing pressure boundary components that comprise the major leakage pathways and calculating whether the total pressure boundary leakage is within the operating margin available in the system design. In either case, the system alignment for the surveillance must ensure that all components that might comprise the pressure boundary while the system is performing its post-accident safety function are tested for leakage appropriately. This includes but is not limited to the seats for check valves SI-285 and V8702. The surveillance frequency shall be based on engineering judgment to ensure that the installed system can perform its intended safety function.

#### 5.5.3.1.9 Instrument Loop Check of Flow Indicating Control Valves (Surveillance Requirement)

This surveillance ensures that a gross failure of the instrument has not occurred. The check shall include a verification that the indicated flow drops below the lowest non-zero division on the

scale when air flow through the rotameter is isolated. Indicated flow dropping below this value ensures that foreign material or deposits within the rotameter flow tube are not preventing the instrument from indicating low flow conditions.

The surveillance frequency shall be based on engineering judgment and considered adequate to monitor adverse trends in instrumentation performance and decrease the probability of undetected equipment failure.

#### 5.5.3.1.10 Verification of Correct ADS Flow after Distribution Header Pressure Change (Surveillance Requirement)

This surveillance ensures that excessive degradation of the rotameter flow controllers has not occurred. The check shall include a verification that the indicated flow is sufficient to prevent flammable conditions in a vessel from being reached when ADS header pressure drops from the Plant Air pressure control valve setting to the Backup Air Receiver pressure control valve setting.

The surveillance frequency shall be based on engineering judgment and considered adequate to monitor adverse trends in instrumentation performance and decrease the probability of undetected equipment failure.

### 5.5.4 AFF TSR Derivation

This subchapter derives the LCOs applicable to the AFF Process Area.

#### 5.5.4.1 FFT-B and MSTT Tank Agitation (LCO 3.7.1)

Subchapter 3.4 requires that the assumed IC that process vessels containing solids are mixed be protected. Routinely mixing solids in the vessels limits the potential accumulation of $H_2$ in settled solids in FFT-B (TK-222) and MSTT (TK-224) avoiding a rapid release of the trapped gas that could result in an unacceptable increase in the flammable vapor concentration. In order to prevent accumulation of $H_2$ in settled solids, this LCO requires that the tank not remain in an unagitated state for a period long enough for the accumulation of trapped gas to become a concern.

The flammability calculations supporting the Safety Basis do not explicitly differentiate between $H_2$ generated within the liquid waste that moves freely with the liquid fraction of the waste and continually evolves into the tank headspace when the liquid's solubility limit for $H_2$ is exceeded and the $H_2$ generated within the settled solids that may accumulate in bubbles until released at a later time. The SWPF Safety Basis conservatively assumes for the purposes of this LCO's surveillance frequencies and completion times that 100% of the $H_2$ generated at any location within the waste is retained in the settled solids within the tank, and that 100% of the trapped gas may be released when the settled solids are subsequently disturbed.

The accident analysis supporting the DSA shows that the minimum time to reach CLFL following a loss of all purge sources in the FFT-B and MSTT is at least 18.9 days

(S-CLC-J-00033[14]). (S-RPT-J-00011[6]). Therefore, it is not possible for $H_2$ bubbles to build up within any settled solids at the bottom of a tank within 18.9 days following a loss of agitation to the point where their subsequent release would cause the tank headspace to reach 100% of the CLFL. This LCO is structured such that the sum of the time to detect a loss of tank agitation per the surveillances and the time to take action to mix the tank per the required actions is less than the minimum time of 18.9 days to reach flammable conditions from the accident analysis by an appropriate amount.

This LCO applies during Multi-strike Mode, while tank liquid volume is sufficient to contain the amount of solids capable of trapping enough $H_2$ that, if released, could cause the corresponding tank vapor space volume to reach the CLFL.

#### 5.5.4.1.1 Periodic FFT-B (TK-222) Agitator Operation (Surveillance Requirement)

The agitator in FFT-B (TK-222) is required to operate continuously for at least 1 hour in order to ensure all solids within the vessels are suspended (M-DS-J-00031, *Filter Feed Tank-B Agitator AGT-222*[33]). Suspending the solids releases all significant trapped gas bubbles that could accumulate within settled solids.

The surveillance frequency of 48 hours is sufficient to ensure that a non-mixed tank is discovered and remediated in accordance with the Required Actions and their Completion Times, prior to exceeding the time necessary to generate the amount of gas necessary to cause the tank's head space to reach the CLFL. Performance of the surveillance includes a verification that the agitator shaft is rotating while the BPCS indicates the agitator is running.

#### 5.5.4.1.2 Periodic MSTT Agitator Operation (Surveillance Requirement)

The agitator in MSTT (TK-224) is required to operate continuously for at least 1 hour in order to ensure all solids within the vessels are suspended (M-DS-J-00032, *MST/Sludge Transfer Tank Agitator AGT-224*[34]). Suspending the solids releases all significant trapped gas bubbles that could accumulate within settled solids.

The surveillance frequency of 48 hours is sufficient to ensure that a non-mixed tank is discovered and remediated in accordance with the Required Actions and their Completion Times, prior to exceeding the time necessary to generate the amount of gas necessary to cause the tank's head space to reach the CLFL. Performance of the surveillance includes a verification that the agitator shaft is rotating while the BPCS indicates the agitator is running.

### 5.5.4.2 AFF Ventilation System (LCO 3.7.2)

Chapter 3.0 credits the AFF Ventilation System with ensuring that non-negligible releases from non-NPH events within the AFF are confined and filtered. To achieve this function, the AFF exhaust fans draw air from the building locations with the highest potential for airborne contamination and exhaust the air from the building through HEPA filters.

This LCO requires that the AFF Ventilation System be operable. An operable AFF Ventilation System includes:

- An operating exhaust fan;
- Backdraft dampers for exhaust fans;
- An on-line exhaust HEPA filter with an efficiency greater than or equal to 99%;
- Exhaust HEPA filter dP instruments and associated CR alarms with setpoints less than or equal to 3.33 in $H_2O$, adjusted for instrument uncertainty; and
- dP instrument that monitors pressure in the AFF process vessel area and associated CR alarms with a setpoint greater than or equal to 0.15 in $H_2O$ vacuum, adjusted for instrument uncertainty.

This LCO also requires that at least ten of the twelve sets of sectionalizing dampers internal to the housing for the AFF exhaust HEPA filter be open. This alignment prevents excessive uncertainty from being associated with the HEPA filter dP alarm.

This LCO applies during Multi-Strike Mode.

The HEPA dP limit of this LCO is based on the maximum dP of 4.0 in $H_2O$ recommended by the manufacturer (EQIP-HVAC-005[22]). The value was reduced to account for the typical alignment of two sets of the filter's internal sectionalizing dampers closed, and is further adjusted in the TSRs to account for instrument uncertainty.

The limit of 0.15 in $H_2O$ vacuum for the AFF process vessel area was selected based on having adequate margin from the nominal parameter control setpoint in the BPCS to avoid nuisance alarms, while maintaining adequate vacuum in the area such that there are no significant unfiltered releases from the AFF.

#### 5.5.4.2.1 Verification that AFF Exhaust Fan is Running (Surveillance Requirement)

This fan status check provides direct confirmation that an AFF exhaust fan is operating. The surveillance frequency shall be based on engineering judgment, and includes consideration of the availability of a low flow alarms and low vacuum alarms that will be received shortly after terminating fan operation.

#### 5.5.4.2.2 Verification of HEPA Filter dP (Surveillance Requirement)

This surveillance requires the operator to compare a filter dP measurement for online AFF exhaust secondary HEPA filters against the allowed limit for the parameter. It is normally performed based on a reading from an operable dP instrument. Periodic performance of this item is appropriate because a dP reading greater than the allowed limit will normally cause an alarm in the CR via the SIS.

#### 5.5.4.2.3 Verification of AFF Process Vessel Area Vacuum (Surveillance Requirement)

This surveillance requires the operator to compare a vacuum measurement for the AFF Process Vessel Area against the allowed limit for the parameter. It is normally performed based on a reading from an operable vacuum instrument. Periodic performance of this item is appropriate because a vacuum reading outside of the allowed limit will normally cause an alarm in the CR via the SIS.

#### 5.5.4.2.4 Instrument Loop Calibration on Final HEPA dP Instrument (Surveillance Requirement)

This surveillance ensures calibration of the credited instrument, and that the associated instrumentation reads within the calculated uncertainty. The loop calibration will also ensure that the SIS logic solver appropriately responds upon reaching the high dP setpoint and that a CR alarm is received. The surveillance frequency shall be within the time documented in the uncertainty analysis (J-CLC-J-00188[23]) which was developed using vendor documentation. The periodic calibration helps to ensure that the installed instrument can perform its intended safety function.

#### 5.5.4.2.5 Instrument Loop Calibration on Process Vessel Area Vacuum Instrument (Surveillance Requirement)

This surveillance ensures calibration of the credited instrument, and that the associated instrumentation reads within the calculated uncertainty. The loop calibration will also ensure that the SIS logic solver appropriately responds upon reaching the low vacuum setpoint and that a CR alarm is received. The surveillance frequency shall be within the time documented in the uncertainty analysis (J-CLC-J-00188[23]) which was developed using vendor documentation. The periodic calibration helps to ensure that the installed instrument can perform its intended safety function.

#### 5.5.4.2.6 HEPA Filter Performance Test (Surveillance Requirement)

A minimum HEPA filter efficiency of 99% provides a reduction of two orders of magnitude in the amount of radiological material released for applicable accidents. Therefore, initial and periodic HEPA filter performance testing shall be performed to ensure a filter efficiency of 99% or better. The surveillance frequency shall include consideration of the guidance in ANSI/ASME N510-1989 (R1995)[24].

#### 5.5.4.2.7 Functional Test of Backdraft Dampers (Surveillance Requirement)

The backflow dampers downstream of the AFF exhaust fans are credited with preventing gross reverse flow through an idle fan to the extent that it could prevent a single operating fan from developing the required negative pressure within the process vessel area; or in the case of two idle fans, prevent the AFF from being pressurized by an operating PBVS exhaust fan. The functional test of the backflow dampers is required to demonstrate that the blades are able to move to their seat when the respective exhaust fan is stopped. There is no need to quantify the

seat leakage for the backflow damper. The key ventilation parameters being within limits (e.g., process vessel area vacuum, AFF exhaust flowrate) during normal system operation confirms that the amount of seat leakage for the backflow damper is acceptable. The surveillance frequency considered vendor documentation for the component; however, the vendor did not identify the need for any periodic functional checks (EQIP-HVAC-006[26]).

#### 5.5.4.2.8 Verification of Sectionalizing Damper Alignment (Surveillance Requirement)

This surveillance ensures that at least ten of twelve sets of sectionalizing dampers for the AFF exhaust HEPA filter are open. This alignment protects assumptions made in determining the uncertainty associated with the HEPA filter dP instrument, since the instrument effectively averages the dPs across the secondary HEPA filters in all twelve sections, whether each section is on line or not. Filter sections with flow isolated will have zero dP across the secondary HEPA filter. The surveillance frequency shall be based on engineering judgment and will consider the ability of the Conduct of Operations Program to minimize the frequency of inadvertent damper/valve manipulations.

### 5.5.4.3 FFT-B Filter Loop Temperature Interlocks (LCO 3.7.3)

Chapter 3.0 credits the FFT-B filter loop temperature interlocks with stopping a filter recirculation pump when the temperature of its filter loop reaches the setpoint. This interlock prevents the recirculation pump from continuously performing work on waste in the filter loop while its temperature is too high. Continuing to operate the filter recirculation pump without sufficient heat removal from either the heat exchanger in the loop or the cooling coils on the tank can increase the temperature of the waste in FFT-B (TK-222) because most or all of the flow from the filter loop is normally returned to the source tank. The temperature of the waste in the tank must be low enough that, during a 10-day period without ventilation or tank cooling, the waste temperature will not reach its flash point and the waste will not reach the temperature at which the solvent's equilibrium vapor pressure will be high enough to reduce the time to reach CLFL below its analyzed value.

This LCO requires that the FFT-B filter loop temperature instrument loops and high temperature interlock be operable with a setpoint less than or equal to 132°F (S-RPT-J-00011[6]; and S-CLC-J-00033[14]), adjusted for instrument uncertainty.

This LCO is applicable during Multi-strike Mode, while each filter loop is aligned to FFT-B (TK-222) and the associated filter recirculation pump is running. Running the filter recirculation pump while the filter loop is aligned to the Cleaning Solution Dump Tank-B (TK-223) does not have the potential to increase the waste temperature in FFT-B (TK-222).

#### 5.5.4.3.1 Verification of FFT-B Filter Loop Temperatures (Surveillance Requirement)

This surveillance requires the operator to compare a temperature measurement for each FFT-B filter loop against the allowed limit for the parameter. It is normally performed based on a reading from an operable temperature instrument. Periodic performance of this item is

appropriate because a temperature reading greater than the allowed limit will normally cause an alarm in the CR via the SIS.

#### 5.5.4.3.2 Instrument Loop Calibration on Temperature Instruments (Surveillance Requirement)

This surveillance ensures calibration of the credited temperature instrument, and that the associated instrumentation reads within the calculated uncertainty. The loop calibration will also ensure that the SIS status lights appropriately respond upon reaching the high temperature setpoint. The surveillance frequency shall be within the time documented in the uncertainty analysis (J-CLC-J-00187[17]) and the SIL verification calculation (J-CLC-J-00014, *SIL Verification Calculation for FFT-B Recirculation Loop High Temp Interlock*[35]) which were developed using vendor documentation. The periodic calibration helps to ensure that the installed instrument can perform its intended safety function.

#### 5.5.4.3.3 Instrument Loop Test of High Temperature Interlocks (Surveillance Requirement)

This surveillance shall ensure that the appropriate safety shutdown contactors for each Filter Recirculation Pump open when commanded by the SIS. The surveillance frequency shall be within the time documented in the SIL verification calculation (J-CLC-J-00014[35]) which was developed using vendor documentation. Periodic performance of this surveillance ensures that adverse trends in instrumentation performance are monitored.

### 5.5.4.4 AFF Sampler Gloveboxes Low Vacuum Interlock (LCO 3.7.4)

Chapter 3.0 credits the low vacuum interlock for Gloveboxes 8 and 9 with sensing a low vacuum in the gloveboxes, and automatically stopping sample flow to the laboratory by stopping sample pumps.

This LCO requires that the Glovebox 8 and 9 vacuum instrument loops and low vacuum interlock be operable with a setpoint less than or equal to 0.1 in $H_2O$, adjusted for instrument uncertainty.

This LCO is applicable during Multi-strike Mode, while operation of the AFF sample pumps is not inhibited.

The limit of 0.1 in $H_2O$ vacuum for the gloveboxes was selected based on having adequate margin from the nominal parameter value to avoid nuisance interlock trips, while maintaining adequate vacuum in the area such that there are no significant releases from the gloveboxes via the inlet HEPA filters.

#### 5.5.4.4.1 Verification of Sampler Glovebox Vacuum (Surveillance Requirement)

This surveillance requires the operator to compare a vacuum measurement for the AFF sampler gloveboxes against the allowed limit for the parameter. It is normally performed based on a

reading from an operable vacuum instrument. Periodic performance of this item is appropriate because a vacuum reading outside of the allowed limit will normally cause an alarm in the CR via the SIS.

#### 5.5.4.4.2 Instrument Loop Calibration on Sampler Glovebox Vacuum Instruments (Surveillance Requirement)

This surveillance ensures calibration of the credited vacuum instrument, and that the associated instrumentation reads within the calculated uncertainty. The loop calibration will also ensure that the SIS status lights appropriately respond upon reaching the low vacuum setpoint. The surveillance frequency shall be within the time documented in the uncertainty analysis (J-CLC-J-00188[23]) and the SIL verification calculation (J-CLC-J-00011, *Glovebox 8 and Glovebox 9 Low Vacuum Interlock SIL Verification Calculation*[36]) which were developed using vendor documentation. The periodic calibration helps to ensure that the installed instrument can perform its intended safety function.

#### 5.5.4.4.3 Test of Sampler Glovebox Low Vacuum Interlock (Surveillance Requirement)

This surveillance shall ensure that the appropriate safety shutdown contactor and shunt trip breaker for the AFF sample pumps open when commanded by the SIS. The surveillance frequency shall be within the time documented in the SIL verification calculation (J-CLC-J-00011[36]) which was developed using vendor documentation. Periodic performance of this surveillance ensures that adverse trends in instrumentation performance are monitored.

### 5.5.5 Facility Administrative Controls

The Hazards Analysis (Subchapter 3.3) of Chapter 3.0 discusses numerous events that do not require quantitative accident analysis because they do not result in a high or moderate offsite consequence. However, certain Administrative Controls are required to ensure adequate worker protection. Chapter 4.0 details controls that must be in place to overcome system vulnerabilities or to maintain system operability. Facilities that interface with the SWPF also place requirements for Administrative Controls on the SWPF.

The controls to meet the above requirements are detailed in the following subchapters and annotated in Table 5.8-2, as appropriate. Table 5.8-2 does not attempt to illustrate those Administrative Controls that are considered “general” to the entire SB (e.g., structural integrity, corrosion control, radiological protection, industrial hygiene, chemical inventory control, and critical lift). Exceptions occur when “unique” elements of a program are specifically credited in the safety analysis of Chapter 3.0.

SACs are those controls that provide a specific preventive or mitigative function for accident scenarios identified in this DSA. SACs are addressed in Chapter 4.5. Programmatic Administrative Controls are the remainder of the Administrative Controls that do not meet the criteria for classification as SACs. Programmatic Administrative Controls typically summarize broad commitments to safety management programs, without specifying exact limits or Operator actions necessary for the control to fulfill its credited safety function.

#### 5.5.5.1 Procedure Controls (TSR Administrative Control 5.8.1)

The safety analysis assumes that operations within the facility are controlled by procedures that have been approved according to facility administrative requirements. These procedures shall govern the facility operations in a controlled manner under all circumstances. The controls are necessary to ensure that safety analysis assumptions on how the facility is operated are maintained.

DOE G 423.1-1A[4] lists the following types of procedures that should be identified in the TSRs:

- Operational activities,
- Maintenance activities,
- Emergency and abnormal operating procedures,
- Security plan implementation,
- Emergency plan implementation,
- All surveillances required by TSRs,
- Administrative aspects of facility operation,
- Programs specified in Section 5.8.2 of the TSRs, and
- Mode changes.

#### 5.5.5.2 Programmatic Administrative Controls (TSR Administrative Control 5.8.2)

The following programs shall be established, implemented, and maintained.

##### 5.5.5.2.1 Radiological Protection Program (TSR Administrative Control 5.8.2.1)

Procedures for personnel radiological protection shall be prepared consistent with DOE requirements and shall be approved, maintained, and adhered to for all operations involving personnel radiation exposure. The Radiological Protection Program shall ensure that the radiation exposure of onsite and offsite individuals is maintained within applicable DOE limits and is As Low As Reasonably Achievable (ALARA). The program shall ensure that individual and collective radiation exposures are minimized.

##### 5.5.5.2.2 Emergency Response Program (TSR Administrative Control 5.8.2.2)

The facility-specific annex to Site Manual SCD-7, *SRS Emergency Plan*[37] shall define specific measures, policies, and actions to prevent or minimize injuries, damage to property, and impact on the environment caused by accidents, natural disasters, or deliberate damage within the area of responsibility.

The Plant Manager shall ensure that the facility-specific annex to the Site Manual SCD-7[37] is established in accordance with applicable DOE requirements, based on formal hazard assessment

and requirements. The facility-specific annex should contain the following elements at a minimum:

- Emergency response organization,
- Operational emergency event classes,
- Notification,
- Consequence assessment,
- Protective actions,
- Medical support,
- Recovery and reentry,
- Emergency facility and equipment,
- Training,
- Drills and exercises, and
- Program administration.

#### 5.5.5.2.3 Environmental Compliance Program (TSR Administrative Control 5.8.2.3)

The Environmental Compliance Program shall comply with Federal and State environmental regulations. The SWPF shall follow facility procedures implementing the applicable environmental regulations.

#### 5.5.5.2.4 Industrial Hygiene Program (TSR Administrative Control 5.8.2.4)

The Industrial Hygiene Program shall serve to maintain employee exposures to chemical, physical, and biological hazards within safe levels. The SWPF shall follow facility procedures governing the applicable Industrial Hygiene regulations.

#### 5.5.5.2.5 Critical Lift/Crane Control Program (TSR Administrative Control 5.8.2.5)

A Critical Lift Program for movement of loads over SC or SS SSCs shall be implemented. This program shall provide assurance that the movement of loads over these locations is conducted in a manner that will minimize the potential of damaging safety-related SSCs, due to load drop accidents. The program shall include, as a minimum, the following attributes:

- Minimization of lifting heights,
- Verification of load charts,
- Lift stability, and
- Verification of rigging.

#### 5.5.5.2.6 Fire Protection Program (TSR Administrative Control 5.8.2.6)

A Fire Protection Program shall be established to minimize threats to the public health or welfare, as well as the hazards to site personnel resulting from a fire. The Fire Protection Program shall address, at a minimum, fire prevention (e.g., fire-resistive construction, facility inspections, and handling of combustible/flammable materials), and fire control (e.g., automatic detection/suppression and alarm systems, fire patrols/watches, availability/maintenance of fire-fighting equipment, identification of fire-fighting personnel, responsibilities and training, and 24-hour fire-fighting coverage). Fire Hazard Analyses shall be performed as necessary to support the Fire Protection Program. Hot Work Permits will be used to control activities involving production of sparks, flames, or high temperatures.

Certain items that are sometimes considered to be part of the overall Fire Protection Program are addressed by SACs in the TSRs (e.g., Ignition Source Control Program for the Process Vessel Cells).

#### 5.5.5.2.7 Installed Process Instrumentation, Measuring and Test Equipment, and Other TSR Measuring Devices Control Program (TSR Administrative Control 5.8.2.7)

Installed Process Instrumentation (IPI) and Measuring and Test Equipment (M&TE) shall be identified and programmatically controlled, when used to monitor process variables (e.g., level, temperature), to comply with the requirements of the TSRs (see 00-700-26816, *TSR Instrumentation – Use of IPI and BPCS Indications for SRs and Required Actions*[38]). Controls shall include, at a minimum, traceability of TSR-related instruments, calibration frequencies for applicable TSR-related instruments, and evaluation of TSR-related items found outside of calibration tolerances.

Equipment used as measuring devices to comply with the requirements of the DSA/TSRs that are not part of the IPI or M&TE programs shall have the required capability/accuracy for performance of the specified requirement. This equipment shall also be within applicable calibration and preventative maintenance frequencies.

Requirements and responsibilities for the control of laboratory equipment are defined by the laboratory's measurement control program. Implementing procedures for the laboratory define sample analysis protocols.

#### 5.5.5.2.8 Configuration Management Program (TSR Administrative Control 5.8.2.8)

A Configuration Management Program shall be implemented that:

- Identifies and documents the Technical Baseline of SSCs and computer software;
- Ensures that changes to the Technical Baseline are properly developed, assessed, approved, issued, and implemented; and
- Maintains a system for recording, controlling, and indicating the status of Technical Baseline documentation on a current basis.

#### 5.5.5.2.9 Nuclear Maintenance Management Program (TSR Administrative Control 5.8.2.9)

A Nuclear Maintenance Management Program shall be established and implemented to ensure that the SWPF SSCs are capable of performing their intended function(s). As a minimum, the program shall consider those SSCs credited in Chapter 3.0 that do not have specific TSR coverage (summarized in Table 5.8-2).

#### 5.5.5.2.10 Nuclear Criticality Safety Program (TSR Administrative Control 5.8.2.10)

The Nuclear Criticality Safety Program shall ensure that the following requirements are met:

- Nuclear Criticality Safety Evaluations (NCSEs) shall be the base documents for nuclear criticality control. Processes shall be shown to be subcritical under all normal and credible abnormal operating conditions;
- NCSEs shall be used to evaluate new processes or significant process changes that may adversely impact the characteristics of nuclear criticality safety; and
- NCSEs shall document the calculations and judgments used in determining that nuclear criticality safety is ensured.

#### 5.5.5.2.11 Quality Assurance Program (TSR Administrative Control 5.8.2.11)

The facility Quality Assurance (QA) Program shall:

- Require that sufficient records be maintained for activities affecting SS SSCs;
- Support independent assessment, verification, and inspection requirements to ensure compliance with the QA Program; and
- Provide for a graded approach to the application of QA requirements throughout the life of the facility.

#### 5.5.5.2.12 Structural Integrity Program (TSR Administrative Control 5.8.2.12)

The Structural Integrity Program shall assess each of the passive SS SSCs of Table 4.7-1 (as a minimum) and determine/implement testing requirements, as appropriate. This program shall provide reasonable assurance that the evidence of structural or functional degradation during service is detected, to permit corrective action before the function of the SSC is compromised. The program shall include, as a minimum, the following attributes:

- Evaluation of SS SSCs to determine their ability to perform their intended safety function(s) under operational and credible design basis events (DBEs);
- Identification of initial and periodic examinations and operational checks of SS SSCs during the life of the facility, to identify whether any degradation is occurring that may compromise the ability of an SSC to perform its safety function; and

- Post-DBE evaluations of SSCs to determine, in the event of a DBE, if the event has damaged the SS SSCs to the extent that they can no longer perform their safety function(s).

#### 5.5.5.2.13 Chemical Inventory Control Program (TSR Administrative Control 5.8.2.13)

A Chemical Inventory Control Program shall be established to provide control over new materials brought into the facility.

#### 5.5.5.2.14 Forklift Controls (TSR Administrative Control 5.8.2.14)

Only battery-powered forklifts are allowed in the CPA of the SWPF Process Building. This Administrative Control is not a SAC because it is not credited as part of a first Level of Control in Chapter 3 of this DSA.

#### 5.5.5.2.15 Software Control Program (TSR Administrative Control 5.8.2.15)

a. Software programming associated with safety-related SSCs shall be controlled by a program that includes the following:

    - Initiation by Design Change,
    - Implementation Phase,
    - Load Procedures,
    - Software Verification and Validation,
    - In-service Testing, and
    - Access for Software Loads Controlled.

b. BPCS programming and procedures will include the following attributes:

    - Display of process parameter values input to the BPCS from the SIS without modification (see 00-700-26816[38]).
    - Administrative controls to prevent modification of the following items without appropriate technical review and management approval.
        - APA Sequence Mode Limits (e.g., tank volumes to transition between Lift/Pulse, Lift/Drop, and Lift/Drop-Low),
        - APA Pulse Time Limits,
        - APA pulse pot sequencing,
        - APA Air Pressure Setpoint Limits,
        - Suppression of APA alarms,
        - Enabling of APA Pulse Time Override,
        - Enabling of APA Air Pressure Override, and

  - APA Valve Sequence.
- BPCS programming changes are evaluated for determining the scope of needed Software Development Testing within the BPCS module being changed, as well as in associated closely-coupled modules where applicable (e.g., APA-Equipment Module and APA-Control Module).

#### 5.5.5.2.16 Traffic Controls (TSR Administrative Control 5.8.2.16)

Programmatic controls shall be implemented to ensure that all vehicle movements are controlled near SS SSCs. These controls shall include posted speed limits. This Administrative Control is not a SAC because it is not credited as part of a first Level of Control in Chapter 3 of this DSA.

#### 5.5.5.2.17 Inter-facility Waste Transfer Control Program (TSR Administrative Control 5.8.3.6)

Programmatic controls shall be implemented to require that inter-facility waste transfers are conducted in a manner that minimizes preventable transfer events (e.g., misdirected transfers, overflows) and ensures that other transfer events (e.g., leaks, spills) are quickly detected and mitigated.

The Waste Transfer Control Program shall address valve line-up checks, leak detection monitoring, monitoring of sending/receiving tank levels, and isolation of inadvertent transfer pathways.

The specific items in the Inter-facility Waste Transfer Control Program that are SACs are identified in Subchapter 4.5.8 of this DSA.

#### 5.5.5.2.18 Sump Flushing Program (TSR Administrative Control 5.8.2.19)

The Sump Flushing Program determines which drain lines from sumps that are credited with directing waste leakage from the leak location to a collection location (e.g., from a P&VG labyrinth to the ASDT Cell, see Subchapter 4.4.8) are required to be periodically flushed to demonstrate that blockage of the line has not occurred. The program will establish required flush periodicity and key flush parameters (e.g., flush sources and durations, flush volumes, flush flow rates). This Administrative Control is not a SAC because it is not credited as part of a first Level of Control in Chapter 3 of this DSA.

#### 5.5.5.2.19 ASDT (TK-601)/Spent Acid Storage Tank (TK-127) Flammability Control Program (TSR Administrative Control 5.8.2.20)

The ASDT (TK-601)/Spent Acid Storage Tank (SAST) (TK-127) Flammability Control Program ensures that the requirements of the Tank Agitation Program are invoked when the contents of the ASDT (TK-601) and SAST (TK-127) reach parameters (e.g., volumetric $H_2$ generation rate, amount of solids, liquid level in vessel) that would result in the waste having the potential to trap

an amount of $H_2$ within 10 days that, if released, would result in the vessel vapor space reaching the CLFL.

The ASDT (TK-601)/SAST (TK-127) Flammability Control Program identifies which process streams require appropriate controls (e.g., limiting stream volumes entering ASDT or SAST) because they have the potential to cause a trapped gas concern in the ASDT or SAST.

This Administrative Control is not a SAC because it is not credited as part of a first Level of Control in Chapter 3 of this DSA.

#### 5.5.5.2.20 Isolation of HEPA filters from the Fire Suppression System (TSR Administrative Control 5.8.2.23)

The water supply to the HEPA filter spray systems will be isolated by a double block and bleed alignment except in cases where there are indications of a filter fire. The position of the fire suppression valves associated with this alignment shall be administratively controlled. This control ensures that seat leakage through or misalignment of a single valve will not result in an unintended introduction of water into the PBVS Exhaust HEPA filters or the AFF Exhaust HEPA filters, which would likely affect the ability of the HEPA filters to perform their safety function. This Administrative Control is not a SAC because it is not credited as part of a first Level of Control in Chapter 3 of this DSA.

#### 5.5.5.2.21 Tank Agitation Program (TSR Administrative Control 5.8.2.24)

Following an event that introduces excessive amounts of solids into tanks that do not normally contain solids (i.e., SSFT [TK-109], WWHT [TK-105], ASDT [TK-601], SAST [TK-127]), mixing operations shall be initiated in those tanks and maintained to the maximum extent practical until the tank contents are transferred to an appropriate location. This Administrative Control is not a SAC because it is not credited as part of a first Level of Control in Chapter 3 of this DSA.

#### 5.5.5.2.22 Conduct of Operations (TSR Administrative Control 5.8.2.27)

A Conduct of Operations Program addresses the applicable topical areas from DOE requirements.

#### 5.5.5.2.23 Laboratory Measurement Control Program (TSR Administrative Control 5.8.2.28)

A Quality Control program for analytical services shall be implemented to provide quality assurance on key laboratory practices (e.g., analytical method, equipment and materials, Measurement System and Equipment, calibration standards and calibration, Quality Control samples and control chart, and qualification of analytical services). This Administrative Control is not a SAC because it is not credited as part of a first Level of Control in Chapter 3 of this DSA.

#### 5.5.5.3 SACs (TSR Administrative Control 5.8.3)

SACs are described in Subchapter 4.5 of this DSA.

### 5.5.6 Minimum Shift Crew

The minimum shift crew encompasses the specific positions that must be manned to place the facility in a safe condition and complete necessary routine surveillances and manual actions assumed by the safety analysis identified in Chapter 3.0 accidents (e.g., shutdown of processes, termination of transfers).

The minimum shift crew requirements for SWPF are based on the staffing needs during the short-term response to a seismic event. This represents the biggest operational burden on facility staffing. Following a seismic event, the accident analysis assumes that all process pumps and APAs are shut down within two hours. This action will require checking the status of fifty-two pumps, about one-third of which should already be not running. Performing this action via the BPCS if available can be done quickly by a pair of Control Room Operators. If BPCS is not available, it will be necessary to either shutdown the pumps via the Motor Control Center breakers or Variable Frequency Drives, or to open the 13.8 kV manual disconnects that separate SWPF from its normal power supply. The Motor Control Center breakers are located in three separate rooms, all on the ground elevation of the facility. A pair of Field Operators can stop these pumps as well as isolate the five sets of APAs from their pressurized air source within the two hours assumed in the accident analysis. The minimum shift crew requirements are summarized in Table 5.8-1.

This page intentionally left blank.

## 5.6 Design Features

This subchapter identifies and describes the passive design features not specifically required to have TSRs, specifically safety limits, limiting control settings, or LCOs, as required by 10 CFR 830[1] and DOE G 423.1-1A[4]. The DOE Guide defines design features as those passive features not covered elsewhere in the TSRs that, if altered or modified, would have a significant effect on safety. The two areas required to be addressed by the guide are vital passive components and configuration/physical arrangement (DOE G 423.1-1A[4]).

### 5.6.1 Vital Passive Components

Components such as piping, valves, vessels, supports, and confinement structures are passive components that, if altered, could have an effect on safety. The passive components identified in Table 5.8-2 are credited in the safety analysis as performing a preventive or mitigative function. TSR Administrative Controls shall be established to assure programmatic controls of Structural Integrity and Preventive Maintenance. Table 5.8-2 also references Chapter 4.0 subchapters that provide more information on these design features.

### 5.6.2 Configuration and Physical Arrangement

Configuration and physical arrangement of components and structures in the SWPF have been credited in the safety analysis. The configuration and physical arrangement of the SSCs listed in Table 5.8-2 are discussed in Chapters 2.0 and 4.0. TSR Administrative Control 5.8.2.8 has been established to programmatically control the Configuration Management Program.

### 5.6.3 Site Characteristics

The location of the SWPF, with respect to the site boundary, is a feature that is utilized in the analysis of accident consequences to the public. Changes in the site boundary would have an effect on the calculated accident consequences. Therefore, the location of the SWPF meets the definition of a design feature. The location of the SWPF is described in Chapter 1.0 of this DSA.

This page intentionally left blank.

## 5.7 Interface with TSRs from Other Facilities

The intent of this subchapter is to identify the SWPF interface with the TSRs (or other applicable SB documentation) for other facilities. The first type of interface involves the transfer of radioactive waste into the SWPF. The second type of interface involves the transfer of radioactive waste out of the SWPF. These interfaces are described further below.

### 5.7.1 Transfer of Radioactive Waste into the SWPF

Programmatic controls shall ensure that waste streams to be received into the SWPF are within the analyzed isotopic and chemical inventory requirements of the SWPF Waste Acceptance Criteria (WAC), and that waste transfers are performed in accordance with the applicable SWPF-approved Waste Compliance Plan (WCP) (or other approved engineering document). If the material does not meet the WAC requirements, an Unreviewed Safety Question (USQ) review (or equivalent) shall be performed and approved by the SWPF prior to transferring the material.

In addition to the WAC, the following interface controls require TSR controls within the CSTF SB to protect the safety analysis assumptions for SWPF:

- Transfer procedures shall describe the communication protocols applicable during transfers between all CRs associated with a transfer from Tank 49 to SWPF.
- SAC – Following an earthquake, transfers from Tank 49 to SWPF shall be terminated and a siphon break established.

To address potential accident scenarios in DWPF associated with transfers from CSTF to SWPF, the following Administrative Controls shall be implemented at SWPF.

- Establish and maintain continuous communication with CRs at CSTF and DWPF during transfers from Tank 49 to SWPF.
- Monitor AST-A (TK-101) level during transfers from Tank 49 to SWPF. Notify the CSTF CR if AST-A (TK-101) level fails to rise, or if level stops rising prior to completion of the transfer.

It is recognized that implementation of these interface controls (surveillances, etc.) may be different for the sending facility and receiving facility, even for the same SSC. These differences are considered acceptable, provided the required safety functions are met as applicable for each of the involved facilities.

### 5.7.2 Transfer of Radioactive Waste out of the SWPF

The receivers of SWPF streams are the Defense Waste Processing Facility (DWPF) and Tank 50 in H-Area Tank Farm. Programmatic controls shall be implemented to ensure that material transferred out of the facility is within the analyzed isotopic and chemical inventory requirements of the intended receiver's WAC and is performed in accordance with the applicable receiver- and SWPF-approved WCP (or other approved engineering document). If the material

does not meet the receiver's WAC requirements, a USQ (or equivalent) shall be performed and approved by the receiving facility prior to transferring the material. Safety requirements for the primary receivers identified above will be discussed in the following documents: WSRC-SA-6, *Final Safety Analysis Report, Savannah River Site, Defense Waste Processing Facility*[39]; WSRC-SA-2002-00007, *Concentration, Storage, and Transfer Facilities Documented Safety Analysis*[40]; and WSRC-SA-2003-00001, *Saltstone Facility Documented Safety Analysis*[41].

Prior to each transfer, it shall be verified that the general transfer prerequisites and controls are met, along with any specific receiving facility requirements. Specific requirements for the primary receiving facilities are discussed in the following subchapters.

#### 5.7.2.1 MST/Sludge Slurry and Strip Effluent Transfers – Interface with DWPF

Inter-facility transfer lines are used to transport MST/sludge slurry and strip effluent between the SWPF and DWPF.

There are no specific controls that must be applied to DWPF operations associated with these transfers to protect the SWPF SB.

To address potential accident scenarios in DWPF associated with transfers from SWPF, the following Administrative Controls shall be implemented at SWPF:

- Establish and maintain continuous communication with the DWPF CR during transfers to DWPF.
- Transfers to DWPF shall be terminated on loss of communication.
- Prior to transfers to DWPF, identify in progress excavation work near the strip effluent and MST/sludge transfer lines within J-Area and discontinue excavation work during the transfer.
- MST/Sludge transfers to DWPF shall be terminated and sound isolation provided (single leak tested valve, double valve isolation, or blank) following:
  - A seismic event;
  - Notification of a Tornado watch, tornado warning, or high wind warning as issued by the SRS Operations Center (SRSOC); and
  - Notification of a DWPF tornado/high wind event;
- SAC – Prior to transfers to DWPF, confirm that either the receipt of the entire sending tank contents is acceptable to DWPF or the intended transfer volume entered into the SWPF BPCS is acceptable to DWPF.

- SAC – Sound isolation (single leak tested valve, double valve isolation, or blank) of the SEHT (TK-205) and SSRT (TK-104) from the DWPF transfer lines is required when not transferring to DWPF. When sound isolation is not possible, notification shall be given to the DWPF Shift Manager/CR Manager of the potential for an unintended waste transfer and excavating activities shall be prohibited in the vicinity the strip effluent and MST/sludge transfer lines within J-Area. This control does not apply to vent lines connected to the headspace of the SEHT (TK-205).
- SAC – Transfers to DWPF shall be terminated when directed by the DWPF CR.
- SAC – Strip effluent transfers to DWPF shall be terminated and sound isolation provided (single leak tested valve, double valve isolation, or blank) following:
  - A seismic event
  - Notification of a Tornado watch, tornado warning, or high wind warning as issued by the SRS Operations Center (SRSOC);
  - Notification of a DWPF tornado/high wind event;
- SAC –Sound isolation of the SEHT (TK-205) from DWPF's transfer line (single leak tested valve, double valve isolation, or blank) is required while draining the strip effluent transfer line to the LPPP. This control does not apply to vent lines connected to the headspace of the SEHT (TK-205).

#### 5.7.2.2 DSS Transfers – Interface with Concentration, Storage, and Transfer Facilities

An inter-area transfer line is used to transport DSS between the SWPF and CSTF. To address potential accident scenarios in CSTF associated with transfers from SWPF, the following Administrative Controls shall be implemented at SWPF:

- Notification shall be provided to and concurrence received from the CSTF Shift Manager/ First Line Manager/CR Manager prior to an intended transfer of DSS to the CSTF.
- For evolutions involving DSS not intended for CSTF, sound isolation (single leak tested valve, double valve isolation, or blank) of the active piping system from the Tank 50-to-Z Area inter-area line shall be required. Where sound isolation is not possible, notification shall be given to and concurrence received from the CSTF Shift Manager/First Line Manager/CR Manager of the potential for an unintended inter-facility transfer prior to the intended evolution.
- Notification of excavations potentially affecting DSS transfer lines within J-Area shall be provided to the CSTF Shift Manager/First Line Manager/CR Manager. Concurrence from CSTF shall be received prior to performing the excavations.
- SAC – Transfer procedures shall identify the functional equipment required to stop transfers of DSS out of SWPF, and to isolate SWPF from the Tank 50-to-Z Area inter-area line.
- SAC – Transfers of DSS into CSTF shall be terminated following a seismic event.

- SAC – Transfers of DSS into CSTF shall be terminated following notification of the following:
  - Tornado warning, tornado watch, or high wind warning as issued by the SRSOC;
  - CSTF tornado/high wind event;
  - CSTF wildland fire event; or
  - CSTF control room abandonment event.

To address potential accident scenarios in SWPF associated with DSS transfers from Tank 50 to Saltstone, the following Administrative Controls shall be implemented at CSTF:

- SAC – Following an earthquake, ensure transfers from Tank 50 to Saltstone are terminated and a siphon break established.

#### 5.7.2.3 DSS Transfers – Interface with Saltstone Facility

The inter-area transfer line used to transport DSS between the SWPF and HTF is interconnected with the Saltstone Facility. This creates the potential for the inadvertent transfer of DSS from SWPF to the Saltstone Facility. Because an inadvertent transfer of this nature is a credible event, the following Administrative Controls shall be implemented at SWPF to address potential accident scenarios in the Saltstone Facility.

- SAC – Transfers of DSS into CSTF shall be terminated following a seismic event.

- SAC – Transfers of DSS into CSTF shall be terminated following notification of the following:
  - Tornado warning, tornado watch, or high wind warning as issued by the SRSOC;
  - Saltstone tornado/high wind event;

There are no specific controls that must be applied to Saltstone Facility operations associated with these transfers to protect the SWPF Safety Basis.

## 5.8 Tables

**Table 5.8-1. Minimum Shift Crew Requirements**

| Shift Operations Manager/ Control Room Manager | CR Operators | Field Operators |
|---|---|---|
| 1 | 2 | 2 |

**Table 5.8-2. Summary of Technical Safety Requirements**

| SSCs / Administrative Controls | Functional Classification/ Control ID | Analysis Section(s) | Operational Limits TSR[1] |
|---|---|---|---|
| High Turbidity Interlock | SS<br>IC-11 | Sect. 4.4.21<br>AA Events–<br>• AFF Vessel Explosion<br>• Seismic | LCO 3.1.1 |
| BDT Gamma Interlock | SS<br>IC-10 | Sect. 4.4.22<br>HA Categories–<br>• Loss of Confinement<br>AA Events–<br>• AFF Vessel Explosion<br>• Seismic | LCO 3.1.2 |
| Tank Temperature Interlock to Filter Recirculation Pumps | SS<br>EC-11.c | Sect. 4.4.18<br>HA Categories–<br>• Fire<br>• Explosion<br>AA Events–<br>• ASP Vessel Explosion<br>• Seismic | LCO 3.1.3 |
| Process Vessel Temperature (AST-A [TK-101], FFT-A [TK-102], SSRT [TK-104], SSFT [TK-109], WWHT [TK-105], SEHT [TK-205]) | (IC) | AA Events –<br>• ASP Vessel Explosion | LCO 3.1.4 |
| SAC – Tank Agitation Program (AST-A [TK-101], FFT-A [TK-102], SSRT [TK-104]) | SS<br>IC-14 | Sect. 4.5.5<br>HA Categories–<br>• Fire (Deflagration)<br>• Explosion<br>AA Events–<br>• ASP Vessel Explosion | LCO 3.1.5 |

**Table 5.8-2. Summary of Technical Safety Requirements (cont.)**

| SSCs / Administrative Controls | Functional Classification/ Control ID | Analysis Section(s) | Operational Limits TSR[1] |
|---|---|---|---|
| PVVS | SS<br>EC-8<br>EC-22 | Sect. 4.4.11<br>HA Categories–<br>• Fire<br>• Explosion<br>• Loss of Confinement<br>AA Events–<br>• APA Aerosolization<br>• Seismic | LCO 3.2.1 |
| PVVS Header Low Vacuum Alarm | SS<br>IC-12 | Sect. 4.4.24<br>AA Events–<br>• ASP Vessel Explosion<br>• Seismic | LCO 3.2.1 |
| PVVS HEPA Filter Instrumentation and Alarms | SS<br>SSC-1 | Sect. 4.4.26 | LCO 3.2.1 |
| PBVS | SS<br>EC-8<br>EC-16 | Sect. 4.4.13<br>HA Categories–<br>• Fire<br>• Explosion<br>• Loss of Confinement<br>AA Events–<br>• Process Cell Fire<br>• APA Aerosolization | LCO 3.2.2 |
| PBVS Instrumentation and Alarms | SS<br>SSC-2 | Sect. 4.4.25 | LCO 3.2.2 |
| Analytical Lab Ventilation System – Hot Cell Exhaust HEPAs | SS<br>EC-15<br>EC-19 | Sect. 4.4.14<br>HA Events–<br>• Fire<br>• Loss of Confinement<br>• Direct Exposure | LCO 3.2.3 |
| Analytical Lab Ventilation System – HEPA filter Instrumentation and Alarms | SS<br>SSC-3 | Sect. 4.4.27 | LCO 3.2.3 |
| Hot Cell low vacuum interlock | SS<br>EC-11.b | Sect. 4.4.20<br>HA Events–<br>• Fire<br>• Loss of Confinement<br>• Direct Exposure | LCO 3.2.4 |

**Table 5.8-2. Summary of Technical Safety Requirements (cont.)**

| SSCs / Administrative Controls | Functional Classification/ Control ID | Analysis Section(s) | Operational Limits TSR[1] |
|---|---|---|---|
| Air Dilution System & Supporting Plant Air Subsystem | SS<br>EC-1<br>EC-2 | Sect. 4.4.12<br>HA Categories–<br>• Fire (Deflagration)<br>• Explosion<br>• NPH<br>AA Events–<br>• ASP Vessel Explosion<br>• Seismic | LCO 3.3.1 |
| Air Dilution System Low Pressure Alarms | SS<br>IC-13 | Sect. 4.4.23<br>AA Events –<br>• ASP Vessel Explosion<br>• Seismic | LCO 3.3.1 |
| FFT-B (TK-222) and MSTT (TK-224) Tank Agitation | SS<br>IC-14 | Sect. 4.5.6<br>HA Categories–<br>• Fire (Deflagration)<br>• Explosion<br>AA Events–<br>• AFF Vessel Explosion | LCO 3.7.1 |
| AFF Ventilation System | SS<br>EC-8<br>EC-23 | Sect. 4.4.16<br>HA Categories–<br>• Fire<br>• Explosion<br>Loss of Confinement<br>AA Events–<br>• AFF Vessel Explosion | LCO 3.7.2 |
| AFF Ventilation System Instrumentation and Alarms | SS<br>SSC-4 | Sect. 4.4.28 | LCO 3.7.2 |
| FFT-B Recirculation Loop Temperature Interlocks to Filter Recirculation Pumps | SS<br>EC-11.c | Sect. 4.4.19<br>HA Categories–<br>• Fire<br>• Explosion<br>AA Events–<br>• AFF Vessel Explosion<br>• Seismic | LCO 3.7.3 |
| Laboratory Sampler Glovebox Low Vacuum Interlock | SS<br>EC-11.a | Sect. 4.4.20<br>HA Events–<br>• Fire | LCO 3.7.4 |

**Table 5.8-2. Summary of Technical Safety Requirements (cont.)**

| SSCs / Administrative Controls | Functional Classification/ Control ID | Analysis Section(s) | Operational Limits TSR[1] |
|---|---|---|---|
| Prog. Administrative Control – Standard Operating Procedures | SS<br>AC-5 | HA Events–<br>• Fire<br>• Explosion<br>• Direct Exposure<br>• Loss of Confinement | 5.8.1.1 |
| Prog Administrative Control –Tank Agitation Program (SSFT [TK-109], WWHT [TK-105], ASDT [TK-601], SAST [TK-127]) | SS<br>IC-14 | HA Categories–<br>• Fire (Deflagration)<br>• Explosion<br>AA Events–<br>• ASP Vessel Explosion | 5.8.2.24 |
| Prog Administrative Control – ASDT (TK-601)/SAST (TK-127) Flammability Control Program | SS<br>AC-8 | AA Events–<br>• ASP Vessel Explosion | 5.8.2.20 |
| SAC – WAC Program | SS<br>IC-9 | Sect. 4.5.1 | 5.8.3.1 |
| SAC – Process Chemistry Control Program | SS<br>IC-7 | Sect. 4.5.2 | 5.8.3.2 |
| SAC – Ignition Source Control Program | SS<br>AC-7 | Sect. 4.5.3<br>AA Events–<br>• Cell Fire<br>• ASP Vessel Explosion | 5.8.3.3 |
| SAC – Solvent Removal Program | SS<br>AC-4 | Sect. 4.5.4<br>HA Categories–<br>• Fire<br>• Explosion<br>• NPH<br>AA Events–<br>• AFF Vessel Explosion<br>• Seismic | 5.8.3.4 |
| SAC – Inter-facility Transfer Control Program | SS | Sect. 4.5.8<br>Sect. 5.7<br>Interfacing Facility's DSAs | 5.8.3.6 |
| SAC – Draining Slurried Solids from FFT-B/MSTT to AFDT | SS<br>AC-9 | Sect. 4.5.7<br>AA Events–<br>• AFF Vessel Explosion | 5.8.3.7 |
| SAC – Seismic Event Response | SS<br>AC-10 | Sect. 4.5.9<br>AA Events–<br>• Seismic | 5.8.3.8 |

**Table 5.8-2. Summary of Technical Safety Requirements (cont.)**

| SSCs / Administrative Controls | Functional Classification/ Control ID | Analysis Section(s) | Operational Limits TSR[1] |
|---|---|---|---|
| SAC – High Temperature in FFT-A or SSRT | SS<br>AC-11 | Sect. 4.5.10<br>AA Events–<br>• ASP Vessel Explosion<br>• Seismic | 5.8.3.9 |
| SAC – Process Piping Line Drain/Flush | SS<br>AC-5.a | Sect. 4.5.11<br>HA Categories–<br>• Fire<br>• Loss of Confinement<br>Direct Exposure | 5.8.3.10 |
| SAC – Access Control | SS<br>AC-1 | Sect 4.5.12<br>HA Categories–<br>• Fire<br>• Loss of Confinement<br>• Direct Exposure<br>• NPH<br>AA Events<br>• Seismic | 5.8.3.11 |
| SAC – APA Isolation | SS<br>AC-5.b | Sect 4.5.13<br>HA Categories–<br>• Loss of Confinement<br>AA Events<br>• APA Aerosolization | 5.8.3.12 |
| Design Feature – Process Vessels, Tanks, Cross-flow Filters (CFFs) | SS<br>IC-5<br>EC-17 | Sect. 4.4.1<br>HA Categories–<br>• Fire<br>• Criticality<br>• NPH<br>AA Events–<br>• Seismic<br>• Process Cell Fire<br>• APA Aerosolization<br>• ASP Vessel Explosion<br>• AFF Vessel Explosion | Section 6.0 |
| Design Feature – Process Vessels: Overflow lines | SS<br>EC-18 | Sect. 4.4.2<br>AA Events–<br>• Seismic | Section 6.0 |

**Table 5.8-2. Summary of Technical Safety Requirements (cont.)**

| SSCs / Administrative Controls | Functional Classification/ Control ID | Analysis Section(s) | Operational Limits TSR[1] |
|---|---|---|---|
| Design Feature – Process Vessel Grounding | SS<br>EC-7 | Sect. 4.4.3<br>HA Categories–<br>• Fire<br>• Explosion<br>AA Events–<br>• Process Cell Fire<br>• ASP Vessel Explosion<br>• Seismic | Section 6.0 |
| Design Feature – Waste Piping | SS<br>EC-12<br>EC-14<br>EC-17 | Sect. 4.4.4<br>HA Categories–<br>• Fire<br>• Explosion<br>• Loss of Confinement<br>• Direct Exposure<br>• NPH<br>AA Events–<br>• Process Cell Fire<br>• Seismic | Section 6.0 |
| Design Feature – Process Building – Central Process Area Structure | SS<br>IC-4 | Sect. 4.4.5<br>AA Events–<br>• Process Cell Fire<br>• Seismic | Section 6.0 |
| Design Feature – CPA Cells and Enclosures | SS<br>IC-1<br>EC-4 | Sect. 4.4.6<br>HA Categories–<br>• NPH<br>AA Events–<br>• Process Cell Fire<br>• ASP Vessel Explosion<br>• APA Aerosolization<br>• Seismic | Section 6.0 |
| Design Feature – Spill Containment (ASP, Sample, and CSSX P&VGs, CSSX Contactor Operating Deck and Contactor Support Floor Area, Process Vessel Cells, WTE, East/West CSSX Tank Cells, South Chases, Hot Cells) | SS<br>IC-4<br>EC-3<br>EC-13 | Sect. 4.4.7<br>HA Categories–<br>• Direct Exposure<br>• Loss of Confinement<br>• Fire<br>AA Events–<br>• Seismic | Section 6.0 |

**Table 5.8-2. Summary of Technical Safety Requirements (cont.)**

| SSCs / Administrative Controls | Functional Classification/ Control ID | Analysis Section(s) | Operational Limits TSR[1] |
|---|---|---|---|
| Design Feature – Drain Lines to ASDT Cell Tanks | SS<br>EC-13 | Sect. 4.4.8<br>HA Categories–<br>• Direct Exposure<br>• Loss of Confinement<br>AA Events–<br>• Seismic | Section 6.0 |
| Design Feature – Lab Hot Cell and AFF Sample Gloveboxes | SS<br>EC-6<br>EC-9 | Sect. 4.4.9<br>HA Categories–<br>• Fire<br>• Loss of Confinement<br>• Direct Exposure<br>• NPH (Hot Cell)<br>AA Events–<br>• Seismic (Hot Cell) | Section 6.0 |
| Design Feature – APAs and Supporting Plant Air Subsystem | SS<br>EC-10<br>EC-20<br>EC-21 | Sect. 4.4.10<br>HA Categories–<br>• Fire<br>• Explosion<br>• Loss of Confinement<br>AA Events–<br>• APA Aerosolization<br>• Seismic | Section 6.0 |
| Design Feature – PVVS Piping in Process Vessel Cells (up to and including the first isolation damper external to the cells) | SS<br>EC-8<br>EC-22 | Sect. 4.4.11<br>AA Events–<br>• Seismic | Section 6.0 |
| Design Feature - ADS Header To Vessels With Connection Point For Portable Air Supply | SS<br>EC-1<br>EC-2 | Sect. 4.4.12<br>HA Categories–<br>• Fire<br>• Explosion<br>• NPH<br>AA Events–<br>• ASP Vessel Explosion<br>• Seismic | Section 6.0 |
| Design Feature – WTE Vent Line | SS<br>EC-24 | Sect. 4.4.15<br>HA Categories–<br>• Fire | Section 6.0 |
| Design Feature – Vents On Waste Drums And Waste Containers Requiring Vents | SS<br>EC-5 | Sect. 4.4.29<br>HA Categories–<br>• Fire<br>• Explosion | Section 6.0 |

**Table 5.8-2. Summary of Technical Safety Requirements (cont.)**

| SSCs / Administrative Controls | Functional Classification/ Control ID | Analysis Section(s) | Operational Limits TSR[1] |
|---|---|---|---|
| Design Feature – 13.8kV Manual Disconnect Switches | SS<br>AC-2 | Sect. 4.4.30<br>HA Categories–<br>• NPH<br>AA Events–<br>• Seismic | Section 6.0 |
| Design Feature – PVVS Ductwork And Piping | SS<br>EC-8 | Sect. 4.4.11<br>HA Categories–<br>• Fire<br>• Explosion<br>• Loss of Confinement<br>• AA Events–<br>• APA Aerosolization | Section 6.0 |
| Design Feature – PBVS ductwork | SS<br>EC-16 | Sect. 4.4.13<br>HA Categories–<br>• Fire<br>• Explosion<br>• Loss of Confinement<br>•<br>AA Events–<br>• APA Aerosolization | Section 6.0 |
| Design Feature – Analytical Laboratory Ventilation System Ductwork (Sampler Glovebox and Hot Cell exhaust ductwork) | SS<br>EC-15 | Sect. 4.4.14<br>HA Categories–<br>• Fire<br>• Explosion<br>• Loss of Confinement<br>• Direct Exposure | Section 6.0 |
| Design Feature – AFF Ventilation System Ductwork | SS<br>EC-23 | Sect. 4.4.16<br>HA Categories–<br>• Fire<br>• Explosion | Section 6.0 |

[1] References in this column are to Section identifiers within the TSR document.

## 5.9 References

[1] 10 CFR 830, *Nuclear Safety Management.*

[2] DOE-STD-3009-94, Change Notice No. 3, *Preparation Guide for U.S. Department of Energy Nonreactor Nuclear Facility Documented Safety Analyses*. U.S. Department of Energy, Washington, D.C.

[3] DOE G 421.1-2, *Implementation Guide for Use in Developing Documented Safety Analyses to Meet Subpart B of 10 CFR Part 830*. U.S. Department of Energy, Washington, D.C.

[4] DOE G 423.1-1A, *Implementation Guide for Use in Developing Technical Safety Requirements*. U.S. Department of Energy, Washington, D.C.

[5] DOE O 5400.5, Change No. 2, *Radiation Protection of the Public and the Environment*. U.S. Department of Energy, Washington, D.C. :

[6] S-RPT-J-00011, *Impact of SRS Liquid Waste HGR PISAs on the SWPF Safety Basis*, Revision 0. Parsons, Aiken, South Carolina.

[7] 00-700-26612, *Evaluation of Trapped Gas Releases in Select ASP and AFP Vessels. Interoffice Correspondence from J. Mullaney to B. Brasel*. Parsons, Aiken, South Carolina. July 3, 2018.

[8] S-CLC-J-00027, *Pulse Jet Mixer Air Jet Aerosolization Event Accident Analysis*, Revision 2. Parsons, Aiken, South Carolina.

[9] S-CLC-J-00029, *Radionuclide Concentrations in Process Vessels*, Revision 1. Parsons, Aiken, South Carolina.

[10] WSRC-TR-2001-00413, *Flocculating, Settling, and Decanting for the Removal of Monosodium Titanate and Simulated High-Level Waste Sludge from Simulated Salt Supernate*, Revision 0. Westinghouse Savannah River Company, Aiken, South Carolina.

[11] J-CLC-J-00013, *High-Turbidity Interlock SIL Verification Calculation*, Revision 0. Parsons, Aiken, South Carolina.

[12] J-CLC-J-00199, *Instrument Loop Uncertainty for SS Turbidity Monitors*, Revision 0. Parsons, Aiken, South Carolina.

[13] J-CLC-J-00018, *BDT High Gamma Interlock SIL Verification Calculation*, Revision 0. Parsons, Aiken, South Carolina.

[14] S-CLC-J-00033, *Time to Reach the Composite Lower Flammability Limit (CLFL) for SWPF Process Vessels*, Revision 2. Parsons, Aiken, South Carolina.

[15] J-CLC-J-00016, *SIL Verification Calculation for FFT-A Tank Temp Interlock to Filter Recirculation Pumps*, Revision 0. Parsons, Aiken, South Carolina.

[16] J-CLC-J-00017, *SIL Verification Calculation for SSRT Tank Temp Interlock to Filter Recirculation Pump*, Revision 0. Parsons, Aiken, South Carolina.

[17] J-CLC-J-00187, *Instrument Loop Uncertainty for SS 3144P (HART) Temperature Transmitters*, Revision 0. Parsons, Aiken, South Carolina.

[18] 00-700-26405, *Comparison of Available Flow and Required Flow through PVVS Orifices*. Interoffice Correspondence from J. Mullaney to B. Brasel. Parsons, Aiken, South Carolina. April 5, 2018.

[19] M-CLC-J-00134, *Process Vessel Ventilation System Sizing Calculation*, Revision 1. Parsons, Aiken, South Carolina.

[20] S-CLC-J-00042, *Process Vessel Air Purge Flowrates*, Revision 2. Parsons, Aiken, South Carolina.

[21] 00-700-17240, *Air Purge Flow Requirements for Backup Air Receiver Tanks (Tk-505 and Tk-506*, Revision 2. Interoffice Correspondence from M. Beck to B. Brasel. Parsons, Aiken, South Carolina.

[22] EQIP-HVAC-005, *HEPA Filters Product & Product Drawing*, Parsons, Aiken, South Carolina.

[23] J-CLC-J-00188, *Instrument Loop Uncertainty for Range 1 SS 3051S (HART) Pressure Transmitters*, Revision 1. Parsons, Aiken, South Carolina.

[24] ANSI/ASME N510-1989 (R1995), *Testing of Nuclear Air-Treatment Systems*. American National Standards Institute/American Society of Mechanical Engineers. Published January 1, 1989.

[25] J-CLC-J-00189, *Instrument Loop Uncertainty for SS HVAC Flow Instrument Loops*, Revision 0. Parsons, Aiken, South Carolina.

[26] EQIP-HVAC-006, *Dedication/Seismic Plan for Safety Significant Ruskin Model NRBD-100 Backdraft Discharge Dampers*. Parsons, Aiken, South Carolina.

[27] J-CLC-J-00010, *Hot Cell Low Vacuum Interlock SIL Verification Calculation*, Revision 1. Parsons, Aiken, South Carolina.

[28] S-CLC-J-00143, *Capacity of Backup Air Receiver Tanks (TK-505 and TK-506)*, Revision 0. Parsons, Aiken, South Carolina.

[29] EQIP-UTIL-006, *Brooks Flow Controllers*,. Parsons, Aiken, South Carolina.

[30] J-CLC-J-00202, *Uncertainty for SS Flow Meters*, Revision 2. Parsons, Aiken, South Carolina.

[31] J-CLC-J-00191, *Instrument Loop Uncertainty for SS 3051S TG (HART) Pressure Transmitters*, Revision 0. Parsons, Aiken, South Carolina.

[32] EQIP-UTIL-005, *Cashco PCV IOM*. Parsons, Aiken, South Carolina.

[33] M-DS-J-00031, *Filter Feed Tank-B Agitator AGT-222*. Parsons, Aiken, South Carolina.

[34] M-DS-J-00032, *MST/Sludge Transfer Tank Agitator AGT-224.* Parsons, Aiken, South Carolina.

[35] J-CLC-J-00014, *SIL Verification Calculation for FFT-B Recirculation Loop High Temp Interlock*, Revision 0. Parsons, Aiken, South Carolina.

[36] J-CLC-J-00011, *Glovebox 8 and Glovebox 9 Low Vacuum Interlock SIL Verification Calculation*, Revision 1. Parsons, Aiken, South Carolina.

[37] Site Manual SCD-7, *SRS Emergency Plan*, WSRC-SCD-7. Aiken, South Carolina.

[38] 00-700-26816, *TSR Instrumentation – Use of IPI and BPCS Indications for SRs and Required Actions*. Interoffice Correspondence to B. Brasel from J. Mullaney. September 12, 2018. Parsons, Aiken, South Carolina.

[39] WSRC-SA-6, *Final Safety Analysis Report, Savannah River Site, Defense Waste Processing Facility*, Volume 1, as amended. Savannah River Remediation LLC, Aiken, South Carolina.

[40] WSRC-SA-2002-00007, *Concentration, Storage, and Transfer Facilities, Documented Safety Analysis*. Savannah River Remediation LLC, Aiken, South Carolina.

[41] WSRC-SA-2003-00001, *Saltstone Facility Documented Safety Analysis*. Savannah River Remediation LLC, Aiken, South Carolina.

This page intentionally left blank.

# SWPF DOCUMENTED SAFETY ANALYSIS

# CHAPTER 6.0
# PREVENTION OF INADVERTENT CRITICALITY

This page intentionally left blank.

# TABLE OF CONTENTS

**6.0 PREVENTION OF INADVERTENT CRITICALITY ..... 6.1-1**

**6.1 Introduction ..... 6.1-1**
**6.2 Requirements ..... 6.2-1**
**6.3 Criticality Concerns ..... 6.3-1**
**6.3.1 Concentration due to MST ..... 6.3-2**
**6.3.2 Concentration due to NAS ..... 6.3-2**
**6.3.3 Inadvertent Transfers ..... 6.3-3**
**6.4 Criticality Controls ..... 6.4-1**
**6.4.1 Engineering Controls ..... 6.4-1**
**6.4.2 Administrative Controls ..... 6.4-1**
**6.4.3 Application of Double Contingency Principle ..... 6.4-2**
**6.4.4 Assumptions ..... 6.4-2**
**6.5 Criticality Safety Program ..... 6.5-1**
**6.5.1 Criticality Safety Organization ..... 6.5-1**
**6.5.2 Criticality Safety Plans and Procedures ..... 6.5-1**
**6.5.3 Criticality Safety Training ..... 6.5-2**
**6.5.4 Determination of Operational Nuclear Criticality Limits ..... 6.5-2**
**6.5.5 Criticality Safety Inspections/Audits ..... 6.5-2**
**6.5.6 Criticality Infraction Reporting and Follow-Up ..... 6.5-3**
**6.6 Criticality Instrumentation ..... 6.6-1**
**6.7 Figures ..... 6.7-1**
**6.8 References ..... 6.8-1**

## LIST OF ACRONYMS AND ABBREVIATIONS

| | |
|---|---|
| % | Percent |
| ANS | American Nuclear Society |
| ANSI | American National Standards Institute |
| CCR | Criticality Control Review |
| CFF | Cross-flow Filter |
| CFR | Code of Federal Regulations |
| CSP | Criticality Safety Program |
| CSS | Criticality Safety Staff |
| DOE | U.S. Department of Energy |
| DSA | Documented Safety Analysis |
| DSS | Decontaminated Salt Solution |
| g/L | Grams per liter |
| mg/L | Milligrams per liter |
| MST | Monosodium Titanate |
| NAS | Sodium Aluminosilicate |
| NCSE | Nuclear Criticality Safety Evaluation |
| Pu | Plutonium |
| S/RID | Standards/Requirements Identification Document |
| SS | Safety Significant |
| SWPF | Salt Waste Processing Facility |
| U | Uranium |

# 6.0 PREVENTION OF INADVERTENT CRITICALITY

## 6.1 Introduction

The purpose of this chapter is to reference and summarize the Salt Waste Processing Facility (SWPF) Criticality Safety Program (CSP) documents and provide an overview of analyses that were performed in accordance with the CSP.

SWPF is a Hazard Category 2 facility. While SWPF will receive very low fissile concentration liquid waste, the volume of the waste present in most large non-geometrically favorable tanks results in fissile mass quantities that exceed Hazard Category 2 threshold. Thus, this chapter is applicable to SWPF.

There are five main topics addressed by this chapter. First, this chapter reviews the applicable regulatory requirements documents. Second, an overview of the fissile material type, form, quantity, and potential locations of concern, is provided. Third, the most important criticality controls are discussed by type (engineered and administrative) for each Nuclear Criticality Safety Evaluation (NCSE). Fourth, the CSP established for the SWPF is discussed. Several aspects of the CSP are presented such as the criticality safety organization, training and qualifications requirements of the criticality safety staff (CSS), analytical methodology, audits and inspections, and infraction reporting. Fifth, and final, this chapter addresses instrumentation credited for the criticality safety of the SWPF.

This page intentionally left blank.

## 6.2 Requirements

The SWPF is a Hazard Category 2 nuclear facility and, as such, Section 204(b)(6) of 10 Code of Federal Regulations (CFR) 830, *Nuclear Safety Management*[1] is applicable. The SWPF Contract (DE-AC09-02SR22210, *Design, Construction, and Commissioning of a Salt Waste Processing Facility [SWPF]*[2]) with the U.S. Department of Energy (DOE) specifies the "design" requirements of Chapter III in DOE O 420.1B, *Facility Safety*[3] and the "programmatic" requirements of Chapter III in DOE O 420.1C, *Facility Safety*[4] for implementation. The composite contractual requirements of the two Orders are detailed in 00-700-24032, *DOE Order 420.1 B/C Chg. 1 Composite Requirements*[5].

The composite requirements of DOE O 420.1B/C Chg. 1 (see 00-700-24032[5]), mandates the use of applicable American National Standards Institute/American Nuclear Society (ANSI/ANS) Criticality Safety Standards. S-RCP-J-00001, *SWPF Standards/Requirements Identification Document*[6] (S/RID) identifies the basic requirements documents. These basic requirements documents are ANSI/ANS-8.1-1998, *Nuclear Criticality Safety in Operations with Fissionable Material Outside Reactors*[7], and ANSI/ANS-8.19-2005, *Administrative Practices for Nuclear Criticality Safety*[8].

In compliance with DOE O 420.1B[3] and DOE O 420.1C[4], N-NCS-J-00003, *SWPF Criticality Safety Program Description*[9], commits the Project to the applicable DOE and ANSI/ANS Standards. N-NCS-J-00002, *SWPF Criticality Safety Program Manual*[10], addresses the implementation for requirements and recommendations (as appropriate) from applicable Standards. The implementing documents for those requirements and recommendations are identified in N-NCS-J-00002[10].

This page intentionally left blank.

## 6.3 Criticality Concerns

NCSEs establish the criticality Safety Basis for the SWPF. The purpose of each NCSE is to demonstrate that the aspect of the SWPF process analyzed remains subcritical for all identified normal and credible abnormal conditions.

NCSEs are based on the existing facility and address the means by which a criticality accident is hypothesized to occur. NCSEs will be written or revised to evaluate new processes, significant changes to existing process at the SWPF, and as conditions warrant.

The following subchapters describe the basis for criticality safety according to the current NCSEs for the SWPF. These NCSEs evaluate the SWPF process vessels, filters, and contactors shown on Figure 2.10-2 in Chapter 2.0 of this Documented Safety Analysis (DSA).

Locations of interest include the non-geometrically favorable process vessels, sumps, contactors, cross-flow filters (CFFs), and horizontal tanks. The facility NCSEs analyzed these locations on a graded approach relying on bounding dimensions applicable. Drawings are referenced in the NCSEs as appropriate.

SWPF is a liquid waste processing facility. Waste feed to the SWPF from the Tank Farms is primarily supernate, with a small amount of entrained solids. The supernate is a highly basic salt solution that has a relatively low solubility for fissile materials. The historical maximum Tank Farm supernate concentrations are 25 milligrams per liter (mg/L) for total uranium (U) (LWO-LWE-2006-00142, *Maximum Tank Farm Supernate Uranium Solubility*[11]), and 1.68 mg/L for total plutonium (Pu) (WSRC-TR-93-0056, *Solubility of Plutonium and Uranium in Alkaline Salt Solutions*[12]). Supernate does not pose a criticality risk because the concentration of fissile material in the supernate is a small fraction of the safe concentration limit.

The U enrichment is expected to be relatively low. Facility NCSEs evaluated a range of U enrichment values to determine an acceptable limit. The Pu enrichment is expected to include more than 5 percent (%) $^{240}$Pu due to historical processing data at the Savannah River site. The applicable NCSEs conservatively assumed 100% $^{239}$Pu to eliminate the need for a limit on the Pu enrichment.

The facility NCSEs analyzed a range of fissile concentrations at bounding material densities to ensure the system remained subcritical at the optimum fissile concentration for the applicable model. Each NCSE addressed the densities of the applicable concentrating and fissile material.

The fissile material at risk in a specific location or for the facility as a whole depends on the volume, U concentration, Pu concentration, and U enrichment of the material present. As appropriate, bounding fissile mass values were calculated for the individual hypothetical accident scenarios in the facility NCSEs.

Thus, the primary focus of criticality safety analyses for the SWPF is the potential to accumulate and concentrate fissile material. The primary concentrating mechanism of monosodium titanate (MST) has been identified and evaluated. The potential concentrating mechanism of Sodium

Aluminosilicate (NAS) was evaluated and dismissed as a credible criticality safety concern. The inadvertent combination of bounding hypothetical process materials was also evaluated.

### 6.3.1 Concentration due to MST

MST is used to separate Pu and $^{90}$Sr from the bulk of the waste. In addition, MST has a slight affinity for U. The sorption of U and Pu on MST throughout the facility was evaluated.

A NCSE (N-NCS-J-00005, *SWPF Nuclear Criticality Safety Evaluation: Fissile Concentration Due to MST*[13]) (MST NCSE) evaluated fissile concentration in four general locations of the SWPF. These four locations were: the large non-favorable geometry process vessels, the CFFs, the contactors, and the sumps.

For the large non-favorable geometry process vessels, the MST NCSE (N-NCS-J-00005[13]) evaluated uniform settling and lump configurations in the bottom of vessels. Normal and credible abnormal upset conditions were evaluated and demonstrated that each condition remained subcritical.

The CFFs and contactors were evaluated to account for a full range of moderation conditions. The MST NCSE (N-NCS-J-00005[13]) demonstrated that, by limiting the U enrichment to a maximum of 8 % $^{235}$U by weight, both the CFFs and contactors remained subcritical. This was the limiting enrichment resulting from the MST NCSE (N-NCS-J-00005[13]).

The MST NCSE (N-NCS-J-00005[13]) evaluated the process cell sumps with a constant mass over a full range of moderation values and demonstrated the system remained subcritical. The constant mass value approximated the nominal process conditions for a Sludge Solids Receipt Tank (TK-104) of concentrated solution.

Moderation, reflection, and interaction conditions were considered and bounded by analysis for normal and credible process upset conditions in the MST NCSE (N-NCS-J-00005[13]).

### 6.3.2 Concentration due to NAS

The formation of NAS was observed in the contactors during full-scale testing. NAS is known to accumulate and concentrate fissile material. A NCSE (N-NCS-J-00006, *SWPF Nuclear Criticality Safety Evaluation: Accumulation of NAS in SWPF Equipment*[14]) (NAS NCSE) was developed to address the presence of NAS throughout the SWPF. This NAS NCSE (N-NCS-J-00006[14]) evaluated fissile concentration due to accumulation on NAS in five general locations of the SWPF: the large non-favorable geometry process vessels, the smaller non-favorable geometry process vessels (e.g., Decontaminated Salt Solution [DSS] Coalescer [TK-201] and DSS Stilling tanks [TK-211]), the CFFs, the contactors, and the Barium-137 Decay Tank [TK-206]. The attention to SWPF locations not addressed by the NAS NCSE (N-NCS-J-00006[14]) was due to the nature of the compound being analyzed.

The NAS NCSE (N-NCS-J-00006[14]) evaluated nominal and bounding material conditions (e.g., mass, density, isotopic content, etc.) for each of the process locations investigated. Instead of limiting the analysis to the exact fissile liquid expected in feed to SWPF in all parameters, some

parameters were investigated to determine maximum values. The NAS NCSE (N-NCS-J-00006[14]) demonstrated that, by limiting the U enrichment to a maximum of 66% $^{235}U$ by weight, all the material compositions and locations investigated remained subcritical. This was the limiting enrichment resulting from the NAS NCSE (N-NCS-J-00006[14]).

### 6.3.3 Inadvertent Transfers

A NCSE (N-NCS-J-00008, *Nuclear Criticality Safety Evaluation: Inadvertent Transfers*[15]) was developed to address the potential for inadvertent combinations of various materials present in SWPF. This NCSE (N-NCS-J-00008[15]) systematically evaluated the combination of bounding hypothetical materials in process vessels bounding for SWPF.

For the large non-favorable geometry process vessels, the Inadvertent Transfer NCSE (N-NCS-J-00008[15]) evaluated uniform settling and lump configurations in the bottom of vessels. Vertical and horizontal process vessels were evaluated and subcritical limits were developed for each. Moderation, reflection, and interaction conditions were considered and bounded by analysis. Normal and credible abnormal upset conditions were evaluated and the process evaluation demonstrated that each condition remained subcritical. The Inadvertent Transfer NCSE (N-NCS-J-00008[15]) demonstrated that all the material compositions and locations investigated remained subcritical.

This page intentionally left blank.

## 6.4 Criticality Controls

The following subsections summarize the controls from each of the NCSEs developed for the SWPF, because each NCSE produced unique controls. The methodology utilized for the NCSEs is consistent with the detailed guidance provided in N-NCS-J-00004, *SWPF Criticality Safety Methods Manual*[16], which in part implements the requirements in N-NCS-J-00003[9].

A review of the criticality controls from the NCSEs was performed to determine which, if any, controls were appropriate for inclusion in the DSA. N-NCS-J-00004[16] provided the criteria for selecting the controls for inclusion during the criticality control review (CCR) per DOE-STD-3007-2007, *Guidelines for Preparing Criticality Safety Evaluations at Department of Energy Nonreactor Nuclear Facilities*[17]. The controls listed in the following Subchapters are the result of the CCR (00-700-22176, *Criticality Control Review* [18]).

The contingency analysis methodology utilized in the NCSEs follows the general progression of: define the normal condition, identify the upset condition (i.e., scenario), identify the scenario limit, and evaluate the series of events/actions necessary for the process to progress from the normal condition to the scenario limit. Prevention of the events/actions necessary for the process to progress to the scenario is generally referred to as "controls". Preference is given to credit passive engineered controls over active engineered controls, and both are preferred over administrative controls. N-NCS-J-00004[16] establishes and details the methodology by which a given scenario is determined to be credible or incredible, and provides guidance for documentation and implementation of the controls for both types of scenarios as appropriate.

### 6.4.1 Engineering Controls

The NAS NCSE (N-NCS-J-00006[14]) did not rely on any passive or active engineered controls. The MST NCSE (N-NCS-J-00005[13]) and the Inadvertent Transfer NCSE (N-NCS-J-00008[15]) credited a few passive design features, but only one of those features was selected for inclusion based on the CCR (00-700-22176[18]).

The sintered metal tubes in the CFFs were credited as being designated as Safety Significant (SS) for preventing solids break-through.

### 6.4.2 Administrative Controls

The MST NCSE (N-NCS-J-00005[13]), NAS NCSE (N-NCS-J-00006[14]), and the Inadvertent Transfer NCSE (N-NCS-J-00008[15]) rely on a small set of administrative controls to support or contribute to the general conclusion that no credible criticality scenarios exist in the SWPF. The following controls were selected for inclusion based on the CCR (00-700-22176[18]).

The administrative process that evaluates chemical introduction to SWPF requires all proposed chemicals be reviewed for acting as a catalyst for fissile precipitation.

### 6.4.3 Application of Double Contingency Principle

The N-NCS-J-00004[16] develops and justifies the criteria for applying the double contingency principle. The N-NCS-J-00004[16] provides guidance through the process analysis to determine if a hypothesized criticality scenario is credible or incredible. One method relies on a process of defining the "normal" conditions, identifying the limit, identifying the failures required to get the process from "normal" to exceed some aspect of the limit, and utilizes the criteria to determine credibility of the scenario. Because the criteria require more than two independent, unlikely (i.e., robust), and simultaneous events to assemble the defined critical configuration, utilizing the established criteria inherently complies with the double contingency principle. Application of the approved methodology resulted in the absence of any credible scenarios in the NCSEs. Thus, the safety SSCs, controls, or Technical Safety Requirement limit designations of this chapter were not required for compliance with the double contingency principle.

### 6.4.4 Assumptions

The MST NCSE (N-NCS-J-00005[13]), NAS NCSE (N-NCS-J-00006[14]), and the Inadvertent Transfer NCSE (N-NCS-J-00005[15]) listed a few restricted assumptions that require protection. The CCR (00-700-22176[18]) provides the basis for including these assumptions in this DSA.

1. The maximum U enrichment allowed is 8% $^{235}$U. The U enrichment assumption from the NAS NCSE (N-NCS-J-00006[14]) is 66% $^{235}$U, thus the MST NCSE (N-NCS-J-00005[13]) is limiting.

2. The maximum U concentration in the feed to SWPF is 0.025 grams per liter (g/L) (including solids). This is the same assumption found in the NAS NCSE (N-NCS-J-00006[14]).

3. The maximum Pu and equivalent trace actinide concentration in the feed to SWPF is 0.0025 g/L (including solids).

4. MST is the only chemical added to a SWPF process vessel that may behave as a concentrating mechanism for fissile material.

5. The MST used in the SWPF is that analyzed in WSRC-STI-2006-00012, *Results of Supplemental MST Studies* [19].

6. The caustic-side solvent extraction solvent and its individual components analyzed in WSRC-TR-2002-00060, *Solvent Composition Impacts on the Extraction of Uranium and Plutonium in the Caustic Side Solvent Extraction Process*[20] is the only organic introduced to the SWPF process.

## 6.5 Criticality Safety Program

The CSS is part of the Nuclear Safety staff for the SWPF. The CSS is a small group of personnel that may be composed of permanent and subcontractor personnel. In this capacity, the Nuclear Safety Manager serves as the manager of the CSS and reports to SWPF Project Management, in accordance with V-IM-J-00001, *SWPF Project Organization, Roles and Responsibilities Manual*[21].

The technical practices of the CSS are based on guidance of the N-NCS-J-00004[16]. The administrative practices applicable to the CSS are directed by SWPF Department Procedure DP-NS-5506, *Nuclear Criticality Safety*[22]. The CSP requirement documents for SWPF are detailed in N-NCS-J-00003[9] and N-NCS-J-00002[10] indicates where the requirements are implemented.

The CSP document hierarchy indicates N-NCS-J-00003[9] contains the requirement documents of the *SWPF S/RID* (S-RCP-J-00001[6]), justifies applicable and non-applicable standards, and obtains DOE approval as required by DOE O 420.1B[3] and DOE O 420.1C[4]. N-NCS-J-00002[10] guides implementation of the program requirements and may provide additional details or requirements including references to implementing documents. N-NCS-J-00004[16] provides detailed guidance for many of the requirements in N-NCS-J-00002[10] and implements most of the CSS portion of the CSP program. DP-NS-5506[22] is another document that implements requirements from N-NCS-J-00002[10]. Training and qualification of the CSS is managed via N-NCS-J-00001, *SWPF Criticality Safety Qualification Card*[23] based on guidance in N-NCS-J-00004.

### 6.5.1 Criticality Safety Organization

The CSS is a subset of the Nuclear Safety Group. The Nuclear Safety Manager serves as the manager of the CSS and reports to SWPF Management, in accordance with V-IM-J-00001[21]. The CSS is a small group of personnel that may be composed of full and part-time subcontractor personnel on an "as-needed" basis. Qualifications for the CSS are detailed in N-NCS-J-00004[16] and documented via N-NCS-J-00001[23].

The institution of a committee responsible for criticality safety will be considered as appropriate.

### 6.5.2 Criticality Safety Plans and Procedures

Operations in which criticality safety is a consideration are governed by written plans and procedures. Applicable documents are subject to the SWPF review and change control process detailed in PP-DC-3012, *Document/Administrative Procedure Preparation and Review*[22]. Initial issuance and revision to SWPF documents receive an intradicipline check and an interdicipline review commensurate with the scope and applicability of the document. Operating procedures, including those governing fissile material operations, are managed via P-CMP-J-00001, *SWPF Conduct of Operations Manual*[24]. Criticality-related limits and controls contained in operating procedures are based on NCSEs. Individual policies, plans, and procedures containing criticality safety controls (administrative or programmatic) are reviewed by the CSS during the

interdicipline review. The SWPF change control process includes the issuance of the document and notification is distributed to selected facility personnel.

Per N-NCS-J-00003[9], there are no credible criticality scenarios for SWPF. Therefore, N-NCS-J-00002[10] indicates the absence of requirements for criticality safety postings and emergency preparedness/evacuations. Programmatic and NCSE based controls for criticality safety are implemented in appropriate SWPF policy, plans, and procedures based on the nature of the control. The implementation of programmatic controls are identified in N-NCS-J-00002[10] and NCSE based controls are implemented and managed in accordance with PP-AS-1200, *SWPF S/RID Maintenance and Compliance*[22]. Periodic review of operations with fissile material is a programmatic requirement and managed accordingly.

### 6.5.3 Criticality Safety Training

N-NCS-J-00001[23], specifies the training requirements for the CSS, which are consistent with DOE-STD-1135-99, *Guidance for Nuclear Criticality Safety Engineer Training and Qualification*[25], as specified in N-NCS-J-00004[16]. N-NCS-J-00004[16] also specifies continuing education requirements necessary for the individual CSS person to maintain qualifications.

### 6.5.4 Determination of Operational Nuclear Criticality Limits

Operational limits for criticality safety are taken from the NCSE(s) applicable to the specific equipment, activity, and/or operation. The analytical methods, computer codes, and techniques utilized by the CSS in the development of the NCSEs are documented in the N-NCS-J-00004[16]. Per the applicable requirements document, each NCSE provides a summary of analytical methods, computer codes, and analysis techniques utilized in the specific NCSE. N-NCS-J-00004[16] provides guidance for selecting the minimum subcritical margin, area of applicability, and references appropriate validation reports for incorporation of the code bias and bias uncertainty. N-NCS-J-00004[16] provides detailed guidance on the methodology and practice of performing contingency analyses, selection of limits and controls, and incorporation of those limits or controls into implementing documents.

Selected criticality safety limits or controls are presented in Section6.4.

### 6.5.5 Criticality Safety Inspections/Audits

DOE O 420.1B/C Chg. 1 (00-700-24032[5]), ANSI/ANS-8.1[7], and ANSI/ANS-8.19[8] all contain requirements related to inspections and audits. N-NCS-J-00009, *SWPF Criticality Safety Audit and Inspection Plan*[26] details the requirements from these documents and provide guidance on their implementation of the audit and inspection program. The SWPF Criticality Safety Audit and Inspection Program assigns responsibilities for the inspections/audits to the appropriate organization, provides criteria for selecting lines of inquiry, and defines appropriate inspection/audit frequencies based on appropriate references. The program identifies the implementing documents and references the appropriate SWPF record keeping requirements or procedures.

### 6.5.6 Criticality Infraction Reporting and Follow-Up

All criticality infractions are reported and reviewed in accordance with PP-CONOPS-07.2, *Occurrence Reporting*[22]. These infractions are to be investigated promptly and corrected, as appropriate. Appropriate actions are to be taken to prevent recurrence.

This page intentionally left blank.

## 6.6 Criticality Instrumentation

There is no criticality detection or alarm instrumentation in the SWPF, based on existing NCSEs.

This page intentionally left blank.

## 6.7 Figures

None.

This page intentionally left blank.

## 6.8 References

[1] 10 CFR 830, *Nuclear Safety Management*.

[2] DE-AC09-02SR22210, *Design, Construction, and Commissioning of a Salt Waste Processing Facility (SWPF)*. U. S. Department of Energy. 2002.

[3] DOE O 420.1B, *Facility Safety*. U.S. Department of Energy, Washington, D.C.

[4] DOE O 420.1C, *Facility Safety*. U.S. Department of Energy, Washington, D.C.

[5] 00-700-24032, *DOE Order 420.1 B/C Chg. 1 Composite Requirements*. Interoffice Correspondence to B. Brasel from B. Kerr. Parsons, Aiken, South Carolina.

[6] S-RCP-J-00001, *SWPF Standards/Requirements Identification Document*. Parsons, Aiken, South Carolina.

[7] ANSI/ANS-8.1-1998, *Nuclear Criticality Safety in Operations with Fissionable Materials Outside Reactors*. American National Standards Institute/American Nuclear Society. La Grange Park, Illinois.

[8] ANSI/ANS-8.19-2005, *Administrative Practices for Nuclear Criticality Safety*. American National Standards Institute/American Nuclear Society. La Grange Park, Illinois.

[9] N-NCS-J-00003, *SWPF Criticality Safety Program Description*. Parsons, Aiken, South Carolina.

[10] N-NCS-J-00002, *SWPF Criticality Safety Program Manual*. Parsons, Aiken, South Carolina.

[11] LWO-LWE-2006-00142, *Maximum Tank Farm Supernate Uranium Solubility*. Communication from Geter, C.R. to Harp, K.D. December 14, 2006.

[12] WSRC-TR-93-0056, *Solubility of Plutonium and Uranium in Alkaline Salt Solutions*. Authors: Hobbs, D.T., et. al. Westinghouse Savannah River Company, Aiken, South Carolina. February 12, 1993.

[13] N-NCS-J-00005, *SWPF Nuclear Criticality Safety Evaluation: Fissile Concentration due to MST*, Revision 2. Parsons, Aiken, South Carolina.

[14] N-NCS-J-00006, *SWPF Nuclear Criticality Safety Evaluation: Accumulation of NAS in SWPF Equipment*, Revision 0. Parsons, Aiken, South Carolina.

[15] N-NCS-J-00008, *SWPF Nuclear Criticality Safety Evaluation: Inadvertent Transfers*, Revision 2. Parsons, Aiken, South Carolina.

[16] N-NCS-J-00004, *SWPF Criticality Safety Methods Manual*. Parsons, Aiken, South Carolina.

[17] DOE-STD-3007-2007, *Guidelines for Preparing Criticality Safety Evaluations at Department of Energy Non-reactor Nuclear Facilities*. U.S. Department of Energy, Washington, D.C.

[18] 00-700-22176, *Criticality Control Review*. Revision 2. Memorandum to B. Brasel from B. Kerr. Parsons, Aiken, South Carolina.

[19] WSRC-STI-2006-00012, *Results of Supplemental MST Studies*, Revision 0. Westinghouse Savannah River Company, Aiken, South Carolina.

[20] WSRC-TR-2002-00060, *Solvent Composition Impacts on the Extraction of Uranium and Plutonium in the Caustic Side Solvent Extraction Process*. Westinghouse Savannah River Company, Aiken, South Carolina. January 18, 2002.

[21] V-IM-J-00001, *SWPF Organization, Roles, and Responsibilities Manual*. Parsons, Aiken, South Carolina.

[22] *Salt Waste Project Facility Project Procedures Manual*. Parsons, Aiken, South Carolina.

[23] N-NCS-J-00001, *SWPF Criticality Safety Qualification Card*. Parsons, Aiken, South Carolina.

[24] P-CMP-J-00001, *SWPF Conduct of Operations Manual*. Parsons, Aiken, South Carolina.

[25] DOE-STD-1135-99, *Guidance for Nuclear Criticality Safety Engineer Training and Qualification*. U.S. Department of Energy, Washington, D.C.

[26] N-NCS-J-00009, *SWPF Criticality Safety Audit and Inspection Plan*. Parsons, Aiken, South Carolina.

# SWPF DOCUMENTED SAFETY ANALYSIS

# CHAPTER 7.0
# RADIATION PROTECTION

This page intentionally left blank.

# TABLE OF CONTENTS

**7.0 RADIATION PROTECTION ..... 7.1-1**

**7.1 Introduction ..... 7.1-1**
**7.2 Requirements ..... 7.2-1**
**7.3 Radiation Protection Program and Organization ..... 7.3-1**
**7.4 ALARA Policy and Program ..... 7.4-1**
**7.5 Radiological Protection Training ..... 7.5-1**
**7.6 Radiation Exposure Control ..... 7.6-1**
**7.6.1 Administrative Controls ..... 7.6-1**
**7.6.2 Radiological Practices ..... 7.6-1**
**7.6.3 Dosimetry ..... 7.6-1**
**7.6.4 Respiratory Protection ..... 7.6-1**
**7.7 Radiological Monitoring ..... 7.7-1**
**7.8 Radiological Protection Instrumentation ..... 7.8-1**
**7.9 Radiological Protection Record Keeping ..... 7.9-1**
**7.10 Occupational Radiation Exposure ..... 7.10-1**
**7.11 References ..... 7.11-1**

## LIST OF ACRONYMS AND ABBREVIATIONS

| | |
|---|---|
| ALARA | As Low As Reasonably Achievable |
| ANSI | American National Standards Institute |
| ARM | Area Radiation Monitor |
| CAM | Continuous Air Monitor |
| CFR | Code of Federal Regulations |
| DOE | U.S. Department of Energy |
| DOELAP | Doe Laboratory Accredited Program |
| DSA | Documented Safety Analysis |
| mrem | millirem |
| rem | Roentgen Equivalent Man |
| RP | Radiation Protection |
| RPP | Radiation Protection Program |
| RPPM | Radiation Protection Program Manager |
| RWP | Radiological Work Permit |
| SWPF | Salt Waste Processing Facility |

# 7.0 RADIATION PROTECTION

## 7.1 Introduction

This chapter describes the Radiation Protection Program (RPP) for the Salt Waste Processing Facility (SWPF) as it relates to facility safety and safe operations.

PL-RP-4500, *SWPF Radiation Protection Implementation Plan for 10 CFR 835 Occupational Radiation Protection Program*[1], describes the methods and protocols which implement Radiation Protection (RP) in the SWPF. The following sections summarize selected aspects of the SWPF RPP detailed in PL-RP-4500[1].

This page intentionally left blank.

## 7.2 Requirements

The principal requirements for RP at the U.S. Department of Energy (DOE) facilities are specified in 10 Code of Federal Regulations (CFR) 835, *Occupational Radiation Protection*[2]. S-CIP-J-00004, *SWPF Radiation Protection Program for 10 CFR 835 (Occupational Radiation Protection)*[3], outlines the requirements applicable to SWPF. Changes, additions, and updates to S-CIP-J-0004[3] are submitted to the DOE Savannah River Operations Office for approval prior to initiating any activities outside the scope of the approved RPP, or when any other conditions specified in Section 101(g) of 10 CFR 835[2] are met. DOE requirements other than listed in 10 CFR 835[2] are included in S-RCP-J-00001, *SWPF Standards/Requirements Identification Document*[4].

S-RCP-J-00001[4] lists the codes, standards, and regulations governing the policies and program elements of the SWPF RPP.

This page intentionally left blank.

## 7.3 Radiation Protection Program and Organization

The RPP commits to implementation of RP requirements, as defined in 10 CFR 835[1], including the facility design and conduct of radiological work at the SWPF Project as well as the As Low As Reasonably Achievable (ALARA) principles relevant to radioactive materials.

Full implementation and compliance scheduling of the RPP is disclosed in S-CIP-J-00004[3]. The requirements and commitments contained within the RPP are implemented through PL-RP-4500[1] and procedures. Plans and procedures provide specific methods and guidance to demonstrate compliance with requirements of the RPP. Implementation is verified through internal reviews of all functional elements of the RPP at least every 36 months.

The SWPF RP Organization is comprised of a Radiation Protection Program Manager (RPPM), Health Physicist(s), Radiological Engineer(s), Radiation Protection Supervisor(s) and Radiation Protection Technicians. The primary organizational objective is to maintain and ensure implementation of the RPP and/or procedural requirements, protecting individuals from occupational exposures to ionizing radiation resulting from work performed for DOE Office of Environmental Management related to the SWPF Project. Specific information relative to roles, responsibilities, qualifications, and staffing levels for the RP Organization is addressed in PL-RP-4500[1].

This page intentionally left blank.

## 7.4 ALARA Policy and Program

PL-RP-4500[1] contains the SWPF ALARA Policy, which pledges to implement every reasonable effort to ensure occupational, environmental, and public radiation exposure from SWPF activities is maintained well below regulatory limits and at levels that are ALARA. The ALARA philosophy is based upon the assumption that any radiation exposure, however small, carries with it some risk which should be balanced by an offsetting benefit.

The SWPF Project objective is to conduct all radiological operations in a safe manner, ensuring the health and safety of all employees, subcontractors, and the general public, while meeting and/or exceeding applicable requirements of 10 CFR 835[2].

The SWPF design minimizes worker exposure. Tanks, transfer lines, and pumps for radioactive liquids and sludge are contained within concrete shielded vaults and/or labyrinths which have physical controls to prevent inadvertent entry during operations. Process equipment has high reliability and low maintenance. Much of the equipment that processes radioactive liquids is installed in duplicate to provide for continued operability while planning for maintenance or repairs in case of individual equipment failure. Prior to maintenance or repair activities, processing systems are placed in a safe configuration, and system components and equipment flushed and drained to reduce dose rates from radioactive material. Process sampling systems incorporate shielded design and sample transport to minimize worker exposure. The SWPF Analytical Laboratory is designed to handle radioactive samples within shielded “Hot Cells”. Samples are diluted in the Hot Cells to reduce radioactive concentrations, allowing for further processing and analysis in glove-boxes and radio-hoods designed to protect workers from exposure to potential airborne radioactivity and contamination.

Radiological work at the facility is authorized by Radiological Work Permits (RWPs) which include specific control measures commensurate with the existing and potential hazards associated with the work. RWPs are integrated with safety permits that contain requirements for worker protection from chemical and industrial hazards. During preparation of RWPs, work with a potential for high worker exposure is identified and subjected to additional review based on the estimated potential exposure and/or radiological hazards. Activities above established ALARA trigger levels are subjected to review by senior management via the ALARA Committee. During reviews, actions to minimize exposure are evaluated such as mockup training, flushing transfer lines and storage tanks, temporary shielding, and changes to work scope and methods. Additional details can be found in PL-RP-4500[1].

This page intentionally left blank.

## 7.5 Radiological Protection Training

Training requirements for personnel working in radiological areas are discussed in Chapter 12.0 of this Documented Safety Analysis (DSA). These are in compliance with Subpart J of 10 CFR 835[2].

This page intentionally left blank.

## 7.6 Radiation Exposure Control

### 7.6.1 Administrative Controls

Administrative Control Levels and personnel exposure limits for the SWPF Project are in accordance with 10 CFR 835[2] limits and ALARA principles as detailed in PL-RP-4500[1].

### 7.6.2 Radiological Practices

Exposure to radiation and radioactive material is primarily controlled through physical design features and entry control. Entry control consists of actions essential to ensure the effectiveness and operability of barricades, devices, alarms, and locks. It provides instruction for initiating, approving, using, and terminating RWPs or other written radiological authorizations used as administrative mechanisms establishing controls for entry and work within radiological areas.

Radiological posting and labeling provides identification of hazards to individuals, allowing them to take the appropriate protective actions given the posted condition. Means and methods of radiological posting and labeling in the workplace, in accordance with DOE requirements, is contained in PL-RP-4500[1].

### 7.6.3 Dosimetry

Personnel involved with the operations and maintenance of the facility, potentially exposed to radiation and/or radioactive material, are monitored individually to ensure personnel monitoring requirements for internal and external exposure are recorded.

SWPF utilizes the Savannah River Site DOE Laboratory Accreditation Program (DOELAP) accredited Dosimetry Program for internal (radio-bioassay) and external (personnel dosimetry) monitoring processes as described in V-ESR-J-00027, *SWPF Radiological Controls Interface Control Document (ICD-27[5])*.

### 7.6.4 Respiratory Protection

Respiratory protection equipment is used when engineering controls are impractical and/or monitoring conditions warrant. Respirators are normally worn for entry into a posted Airborne Radioactivity Area or when working on equipment having a high potential for airborne suspension of radioactive material. Respiratory protection selection is based on the type(s) of contaminant(s) to which the worker may be exposed (i.e., chemical, radiological, or both) and the measured or anticipated concentrations. Respirators approved by the National Institute for Occupational Safety and Health are selected to provide adequate protection factors for the anticipated conditions.

Other issues related to respiratory protection, such as control and issuance of respirators (training, fitness, and medical testing); inspection of equipment (cleaning, maintenance, and repair); and documentation of associated records, are managed via references from PL-RP-4500[1]

This page intentionally left blank..

## 7.7 Radiological Monitoring

Workplace monitoring includes air sampling, contamination and dose rate surveys. These surveys are performed to document radiological conditions in the workplace, identify changes in radiological conditions, detect the gradual buildup of radioactive materials in the workplace, verify the effectiveness of engineering and process controls in containing radioactive materials, and identify and control potential sources of individual exposure to radiation and/or radioactive material. Monitoring protocols (frequencies and locations) are selected based on potential and actual radiological conditions, the probability for changing conditions, and area occupancy factors.

Data collected during surveys provides information used for placement of radiological postings and boundaries, trending analyses, pre-job planning, selection of appropriate personnel protective equipment, and/or the need for enhanced engineering or administrative controls.

The SWPF is continuously monitored through use of Area Radiation Monitors (ARMs) and Continuous Air Monitors (CAMs), which are stationed throughout the facility in specific locations selected during the design phase of the project based on accessibility of areas, consideration of source terms, and the potential for changes in conditions resulting from process operations.

CAMs and ARMs collectively serve as a means to establish baseline operational radiological conditions, provide continuous monitoring and trending data, and provide personnel rapid and reliable warning of potential upset conditions. They are designed to be operational 24 hours per day, seven days per week, with the capability to detect gradual and/or immediate changes in airborne radioactive material concentrations and/or general area dose rates. All monitoring stations have local (audible/visual) alarms to alert workers in the immediate area to take actions to minimize or terminate personal exposures, and remote readouts and alarms in the RP office and Control Room. Local and remote alarm activation occurs when established setpoints (permissible levels) are exceeded.

Personnel exiting the Radiological Buffer Area established at the Central Processing Area entry/exit points are required to perform a hand and foot frisk at a minimum or a whole-body frisk, using an automated personnel contamination monitor. Personnel exiting posted Contamination or High Contamination Areas are required to perform a whole-body frisk, using appropriate hand-held frisking equipment prior to leaving an area and proceeding to the automated personnel contamination monitors at the Radiological Buffer Area boundary. If personnel identify contamination during any survey, they stay in a designated low dose rate area and request RP assistance.

The programmatic details of continuing collection of relevant meteorological data, records, and reports generated by the monitoring program are available via PL-RP-4500[1].

This page intentionally left blank.

## 7.8 Radiological Protection Instrumentation

The RP Organization selects and uses radiological instrumentation from manufacturers that have demonstrated compliance with applicable industry standards, and utilizes instrument services from the Savannah River Site Instrumentation and Calibration Laboratory or contracts services through manufacturers or vendors that have demonstrated compliance with applicable industry standards, such as American National Standards Institute (ANSI) N323A-1997, *Radiation Protection Instrumentation Test and Calibration, Portable Survey Instruments*[6].

The RP Organization has equipment capable of identifying and quantifying fixed and removable contamination levels on items or areas for both the types and energies of the radioisotopes present in the SWPF. These instruments have sufficient sensitivity for measuring direct contamination levels down to the limits in Appendix D of 10 CFR 835[2]. The RP Organization also has air sample counting equipment capable of measuring alpha and beta on air samples down to less than 0.02 Derived Air Concentration for radionuclides present in SWPF.

This page intentionally left blank.

## 7.9 Radiological Protection Record Keeping

SWPF generates and maintains records demonstrating compliance with 10 CFR 835[2] and the SWPF RPP. All records are retained until final disposition is authorized by DOE.

Radiological protection records generated as a result of requirements in procedures are Quality records. Examples of these records include Source Records, Radiological Release Records, Personnel Exposure Records, Survey Records, RWPs, Instrument Calibration Records, and Annual Dose Reports.

The handling and retention of Quality records are discussed in Chapter 14.0 of this DSA.

This page intentionally left blank.

## 7.10 Occupational Radiation Exposure

The SWPF is a new facility. Pending the development of an operational history, initial estimates of annual and cumulative (life-of-plant) personnel exposures associated with the operations, maintenance and equipment repair are based on S-EIP-J-00004, *SWPF Final Design ALARA Review Report*[7] and an Occupational ALARA Analysis performed during Cold Commissioning.

The SWPF administrative control level for individual personnel exposure (Radiological Workers) is two tiered and based on Total Effective Dose (external + internal):

1. No individual is allowed to exceed 1,000 millirem (mrem) in a year without review and approval by the project RPPM and Operations Manager.
2. No individual is allowed to exceed 2,000 mrem in a year without advance review and approval by the SWPF ALARA Committee, and Plant Manager.

Additional administrative control levels for personnel exposure include:

- The sum of the equivalent dose to the whole body for external exposures and the committed equivalent dose to any organ or tissue other than the skin or the lens of the eye: < 10.0 Roentgen Equivalent Man (rem) in a year.
- The sum of the equivalent dose to the skin or to any extremity for external exposures and the committed equivalent dose to the skin or to any extremity: < 10 rem in a year.
- Equivalent dose to the lens of the eye: < 3 rem in a year.
- Equivalent dose to an embryo/fetus for the entire gestation period: < 400 mrem.

This page intentionally left blank.

## 7.11 References

[1] PL-RP-4500, *SWPF Radiation Protection Implementation Plan for 10 CFR 835 Occupational Radiation Protection Program*. Parsons, Aiken, South Carolina.

[2] 10 CFR 835, *Occupational Radiation Protection*.

[3] S-CIP-J-00004, *SWPF Radiation Protection Program for 10 CFR 835 (Occupational Radiation Protection)*. Parsons, Aiken, South Carolina.

[4] S-RCP-J-00001, *SWPF Standards/Requirements Identification Document*. Parsons, Aiken, South Carolina.

[5] V-ESR-J-00027, *SWPF Radiological Controls Interface Control Document (ICD-27)*. Parsons, Aiken, South Carolina.

[6] ANSI N323A-1997, *Radiation Protection Instrumentation Test and Calibration, Portable Survey Instruments*. American National Standards Institute.

[7] S-EIP-J-00004, *SWPF Final Design ALARA Review Report. Parsons, Aiken, South Carolina.*

This page intentionally left blank.

# SWPF DOCUMENTED SAFETY ANALYSIS

# CHAPTER 8.0
# HAZARDOUS MATERIAL PROTECTION

This page intentionally left blank.

# TABLE OF CONTENTS

**8.0 HAZARDOUS MATERIAL PROTECTION ..... 8.1-1**

**8.1 Introduction ..... 8.1-1**
**8.2 Requirements ..... 8.2-1**
**8.3 Hazardous Material Protection and Organization ..... 8.3-1**
**8.4 Hazardous Materials ALARA Policy and Program ..... 8.4-1**
**8.5 Hazardous Material Training ..... 8.5-1**
**8.6 Hazardous Material Exposure Control ..... 8.6-1**
**8.6.1 Hazardous Materials Identification Program ..... 8.6-1**
**8.6.2 Administrative Limits ..... 8.6-1**
**8.6.3 Occupational Medical Programs ..... 8.6-1**
**8.6.4 Respiratory Protection ..... 8.6-1**
**8.7 Hazardous Material Monitoring ..... 8.7-1**
**8.8 Hazardous Material Protection Instrumentation ..... 8.8-1**
**8.9 Record Keeping ..... 8.9-1**
**8.10 Hazard Communication Program ..... 8.10-1**
**8.11 Occupational Chemical Exposures ..... 8.11-1**
**8.12 References ..... 8.12-1**

## LIST OF ACRONYMS AND ABBREVIATIONS

| | |
|---|---|
| % | Percent |
| ACGIH | American Conference of Governmental Industrial Hygienists |
| ALARA | As Low As Reasonably Achievable |
| ANSI | American National Standards Institute |
| CCA | Cold Chemicals Area |
| CFR | Code of Federal Regulation |
| DOE | U.S. Department of Energy |
| ESH | Environmental, Safety, and Health |
| IH | Industrial Hygienist |
| JHA | Job Hazards Analysis |
| NIOSH | National Institute for Occupational Safety and Health |
| OSHA | Occupational Safety and Health Administration |
| PEL | Permissible Exposure Limit |
| PPE | Personal Protective Equipment |
| RQ | Reportable Quantity |
| SDS | Safety Data Sheet |
| SRS | Savannah River Site |
| SRSOC | SRS Operation Center |
| SWPF | Salt Waste Processing Facility |
| TLV | Threshold Limit Value |
| WSHP | Worker Safety and Health Program |

# 8.0 HAZARDOUS MATERIAL PROTECTION

## 8.1 Introduction

This chapter summarizes provisions for hazardous material protection other than radiological:

- Description of the overall hazardous material protection program and organization;
- Hazard Communication Program;
- Hazardous Materials Training;
- Description of hazardous material exposure control including identification of hazardous material, administrative limits, occupational medical programs, and respiratory protection;
- Identification of hazardous material monitoring to protect workers, the public, and the environment; and
- Description of the plans and procedures for maintaining hazardous material records, hazard communications, and occupational exposures.

The Salt Waste Processing Facility (SWPF) processes utilize chemicals that could pose hazards to SWPF personnel and Savannah River Site (SRS) personnel at adjacent facilities if released to the environment. Substances that pose occupational hazards are listed in Subpart Z of 29 Code of Federal Regulations (CFR) 1910, Occupational Safety and Health Standard[1]. Some SWPF process chemicals (sodium hydroxide, nitric acid, and oxalic acid) are listed in Subpart Z of 29 CFR 1910[1] with their respective permissible exposure levels.

The use of hazardous substances is analyzed and controlled pursuant to the SWPF Integrated Safety Management System. SWPF operating procedures, S-CIP-J-00003, *SWPF 10 CFR 851 Worker Safety and Health Program*[2] (WSHP), and the Chemical Hygiene Plans are used to control and abate chemical hazards. Non-routine chemical hazards that may arise during corrective maintenance activities (e.g., welding-generated gases such as ozone, phosgene, and nitrogen oxides, or metal fumes such as hexavalent chromium) are analyzed via task specific Job Hazards Analysis (JHA). Controls identified by the JHA are included in the approved work authorization package as specific instructions for such elements as air monitoring and personal protective equipment (PPE).

Appropriate and compliant reporting and emergency actions have been developed to ensure compliance with 40 CFR 355, *Emergency Planning and Notification* [3]. This includes development of an emergency action plan in compliance with Section 38 of 29 CFR 1910[1].

This page intentionally left blank.

## 8.2 Requirements

S-RCP-J-00001, *SWPF Standards/Requirements Identification Document*[4] lists the codes, standards, and regulations governing the policies and program elements of the SWPF programs that protect workers and the environment from non-radioactive hazardous materials.

Highly or extremely hazardous substances that pose hazards to both the facility and persons outside the facility boundary are addressed in Section 119 of 29 CFR 1910[1]; 40 CFR 68, *Chemical Accident Prevention Provisions*[5]; and 40 CFR 355[3]. Nitric acid at ≥ 94.5 percent (%) concentration is listed in 29 CFR 1910.119[1]. Nitric acid > 80% is listed in Section 130 of 40 CFR 68[5]. Twenty percent (20%) nitric acid is the highest nominal concentration used in the SWPF process, therefore there are no requirements applicable to SWPF from Section 119 of 29 CFR 1910[1] or 40 CFR 68[5]. Appendix A in 40 CFR 355[3] lists nitric acid (CAS 7697-37-2) in the range 0.4 to 50% as a chemical of concern. Therefore, the emergency planning and reporting requirements of this regulation are applicable to facility operations.

This page intentionally left blank.

## 8.3 Hazardous Material Protection and Organization

During design reviews conducted by Environmental, Safety, and Health (ESH) professionals in coordination with the design staff, chemical hazards associated with operations were identified in the Cold Chemicals Area (CCA), Analytical Laboratory, and other operations. Engineered control features to eliminate or minimize exposure to hazardous chemicals were established in the SWPF design.

SWPF programs for the routine identification, analysis, and control of chemical hazards are described in the SWPF WSHP (S-CIP-J-00003[2]). The WSHP, its implementing procedures, and instructions for chemical operations address the following elements:

- Initial or baseline surveys of work areas or operations to identify and evaluate potential worker health risks;
- Periodic resurveys and/or exposure monitoring, as appropriate;
- Protection of work areas through engineered controls to ensure that chemical exposure levels do not exceed Occupational Safety and Health Administration (OSHA) Permissible Exposure Limits (PELs) or American Conference of Governmental Industrial Hygienists (ACGIH) Threshold Limit Values (TLVs) and that exposure levels are maintained As Low As Reasonably Achievable (ALARA);
- Documented exposure assessment for chemicals and use of accredited industrial hygiene laboratories;
- Specification of appropriate engineering, administrative, work practice, and/or personal protective control methods to limit chemical exposures to acceptable levels;
- Worker education, training, and involvement in work planning and procedure development;
- Use of the SWPF's Occupational Medicine Provider;
- Use of respiratory protection equipment tested under the U.S. Department of Energy (DOE)-STD-1167-2003, *The Department of Energy Respiratory Acceptance Program for Supplied-Air Suits*[6], when National Institute for Occupational Safety and Health (NIOSH)-approved respiratory protection does not exist for DOE tasks that require such equipment;
- Selection and care of NIOSH-approved respiratory protection equipment meeting applicable requirements found in American National Standards Institute (ANSI) Z88.2-1992, *Practices for Respiratory Protection*[7], and maintained in accordance with Section 134(h) of 29 CFR 1910[1];
- Policies and procedures to mitigate the risk from identified and potential occupational carcinogens; and
- Use of appropriate industrial hygiene standards.

Hazardous material protection procedures are developed under the direction of the Industrial Hygiene Manager, who oversees implementation of the Program. The ESH organization is

staffed with professionals in the Occupational Safety, Industrial Hygiene, and Environmental functional areas to assist line management in the safe execution of the SWPF mission. See subchapter 17.3 for a description of the SWPF organizations.

Inadvertent release of hazardous substances to the environment is controlled through the CCA design. The CCA is a totally enclosed area that incorporates segregated dike and sump systems, with sufficient volume to hold the entire contents of the storage and process tanks within any dike.

In the event of a release into the environment of any quantity of a hazardous substance exceeding the reportable quantity (RQ) in 40 CFR 302, *Designation, reportable quantities, and notification*[8], the SRS Operation Center (SRSOC) is notified by Shift Operations Manager (or designee), as soon as he/she has knowledge of the release. If a RQ level is reached, SRSOC notifies the National Response Center. SWPF has procedures and training in place for chemical spill response.

General emergency response actions consistent with DOE O 151.1C, *Comprehensive Emergency Management System*[9], are addressed in the Emergency Management Program and in Chapter 15.0.

## 8.4 Hazardous Materials ALARA Policy and Program

The design and operational procedures for the CCA and Analytical Laboratory ensure worker exposure to hazardous chemicals is ALARA. This provision maintains worker and public exposure to chemicals as far below the exposure limits as practical, consistent with the purpose for which the activity is undertaken, taking into account the state of technology, the economics of improvements in relation to state of technology, the economics of improvements in relation to benefits to the worker and public health and safety, and other societal and socioeconomic considerations. This policy is implemented through the SWPF WSHP (S-CIP-J-00003[2]), operating procedures, JHAs, and work planning and authorization documents.

This page intentionally left blank.

## 8.5 Hazardous Material Training

Site personnel are trained in accordance with the requirements of Section 1200 of 29 CFR 1910[1]. Initial worker training on hazardous chemicals in the workplace is provided through SWPF General Employee Training, on-the-job training, individual study of applicable procedures, and JHA. SWPF personnel receive training on hazardous chemicals in their work area upon initial work assignment and as needed as chemical hazards change. Employees responsible for CCA and Analytical Laboratory operations are specifically trained on the applicable chemical handling procedures. Personnel performing work outside these areas (e.g., maintenance or decontamination work) receive training specific to the hazardous materials used in, or generated by, the work as part of the pre-job briefing and review of the JHA and/or specific Work Package. Training includes methods and procedures for chemical handling, ventilation, PPE, material incompatibilities, exposure hazards, and emergency response for exposure and/or spills.

Subsequent training is provided whenever a significant new chemical hazard is introduced to the work area or work process for which the employee has not previously received training.

This page intentionally left blank.

## 8.6 Hazardous Material Exposure Control

The SWPF WSHP[2] (S-CIP-J-00003[2]) establishes the general Project policies and requirements for developing chemical handling procedures to ensure that chemical exposure is minimized at levels that are less than the TLV or PEL. The implementing procedures specify methods and approaches to minimize exposure.

SWPF abnormal and emergency operating procedures, in conjunction with SWPF Emergency Plan Implementing Procedures, specify appropriate actions for initial spill containment actions, first aid, evacuation, SRSOC notification, and PPE for trained and qualified spill response personnel.

### 8.6.1 Hazardous Materials Identification Program

Hazardous materials identification and evaluation is ensured through implementation of the SWPF WSHP, the Chemical Hygiene Plans, and associated implementing procedures, including JHAs and work planning/work authorization documents.

The SWPF WSHP and its implementing procedures require that chemical containers be appropriately labeled to ensure that chemical contents and hazards are clearly communicated. Paper or electronic copies of Safety Data Sheets (SDSs) (previously called Material Safety Data Sheets) for any chemical known to be present in the workplace are readily available to SWPF personnel.

### 8.6.2 Administrative Limits

Administrative limits are based on OSHA PELs or ACGIH TLVs, as codified in 10 CFR 851, *Worker Safety and Health Program*[10] and on information provided in the SDS provided by the chemical manufacturer.

### 8.6.3 Occupational Medical Programs

As part of the SWPF WSHP (S-CIP-J-00003[2]), an Occupational Medicine Program that satisfies the requirements of 10 CFR 851[10] is established. The Occupational Medical Program (including physical examinations, medical evaluations, medical surveillance, and medical record keeping) is developed by the ESH Manager and/or Industrial Hygienist (IH) Manager, working with a physician qualified in occupational medicine. SWPF personnel may utilize the SRS Medical Facility or other licensed medical facilities for medical monitoring activities, as needed.

### 8.6.4 Respiratory Protection

Use of respiratory protection onsite is governed by the SWPF WSHP and its implementing procedures to ensure compliance with the requirements of Section 134 of 29 CFR 1910[1] and ANSI Z88.2-1992[7].

This page intentionally left blank.

## 8.7 Hazardous Material Monitoring

The SWPF WSHP (S-CIP-J-00003[2]) and implementing procedures include methods and schedules for periodic hazardous material sampling and monitoring as applicable of J-Area for emissions of volatile and semi-volatile chemicals. Qualified personnel monitor work locations to maintain worker exposures to hazardous materials ALARA.

Monitoring methods for chemical exposure typically utilize breathing zone air monitoring with collection media selected based upon the NIOSH or OSHA approved methods. These type personal or general area samples are sent off-site to approved analytical laboratories for quantification. Use of chemically sensitive detectors may be used to provide real time monitoring of general areas for chemicals of concern.

This page intentionally left blank.

## 8.8 Hazardous Material Protection Instrumentation

The SWPF WSHP (S-CIP-J-00003[2]) and implementing procedures include methods that specify appropriate instrumentation for periodic monitoring of the areas for emissions of process chemicals. Storage, issue, use, and calibration of the instrumentation are in accordance with manufacturers' recommendations and requirements. Control of the calibration process and quality assurance for calibration and maintenance is implemented via applicable procedures for maintenance and testing.

This page intentionally left blank.

## 8.9 Record Keeping

The SWPF WSHP (S-CIP-J-00003[2]) and SDSs are maintained and are accessible to employees. SDSs are updated as new chemicals are introduced in the SWPF and as revised SDSs are received.

Monitoring records and results are maintained by the IH Manager and/or the Engineering, Procurement, and Construction Document Control. Exposures in excess of allowable limits are provided to the Occupational Medical Provider for evaluation and consultation.

The SWPF Occupational Medical Program establishes requirements for medical record management that are consistent with the requirements of 10 CFR 851[10]. Employee medical records are maintained for each employee for whom medical services are provided. The confidentiality of employee medical records is maintained, and medical records are protected and stored permanently. Pursuant to Section 1020 of 29 CFR 1910[1] and the *Health Insurance Portability and Accountability Act of 1996*[11], employee medical records are available to employees upon written request.

This page intentionally left blank.

## 8.10 Hazard Communication Program

The SWPF WSHP (S-CIP-J-00003[2]) and implementing procedure(s) contain applicable elements of the Hazard Communication regulation, Section 1200 of 29 CFR 1910[1]. The Program (PP-SH-4460, *Hazard Communication*[12]) identifies the specific responsibilities of management and Project staff, the requirements for having and maintaining SDSs for hazardous materials, receipt of chemicals, material labeling, chemical usage, and training. The implementing procedures provide specific means and methods for compliance with Section 1200 of 29 CFR 1910[1].

Training is discussed in the preceding Section 8.5.

This page intentionally left blank.

## 8.11 Occupational Chemical Exposures

Routine chemical use in the SWPF is normally limited to operations in the CCA and Analytical Laboratory (i.e., laboratory reagents such as acids, bases, organic compounds). Facility design and procedures ensure that worker exposure is within OSHA or ACGIH limits and ALARA.

Other chemicals for which potential worker exposure exists are those associated with cleaning solutions, compressed gases, floor coatings, hydraulic fluids, weld prep solvents, equipment maintenance, and equipment fuels. The use of chemicals is analyzed via a formal JHA and controlled through instructions developed in the work authorization package.

Estimated annual exposures to the workers from normal operations is provided in Subchapter 3.3.2.3.4 of this DSA.

This page intentionally left blank.

## 8.12 References

[1] 29 CFR 1910, *Occupational Safety and Health Standards*.

[2] S-CIP-J-00003, *SWPF 10 CFR 851 Worker Safety and Health Program*. Parsons, Aiken, South Carolina.

[3] 40 CFR 355, *Emergency Planning and Notification.*

[4] S-RCP-J-00001, *SWPF Standards/Requirements Identification Document*. Parsons, Aiken, South Carolina.

[5] 40 CFR 68, *Chemical Accident Prevention Provisions*.

[6] DOE-STD-1167-2003, *The Department of Energy Respiratory Acceptance Program for Supplied-Air Suits*. U.S. Department of Energy, Washington, D.C.

[7] ANSI Z88.2-1992, *Practices for Respiratory Protection.* American National Standards Institute, New York, New York.

[8] 40 CFR 302, *Designation, Reportable Quantities, and Notification*.

[9] DOE O 151.1C, *Comprehensive Emergency Management System*. U.S. Department of Energy, Washington, D.C..

[10] 10 CFR 851, *Worker Safety and Health Program*.

[11] Public Law 104-191, *Health Insurance Portability and Accountability Act of 1996*. Enacted August 21, 1996.

[12] *Salt Waste Processing Facility Project Procedures Manual*. Parsons, Aiken, South Carolina.

This page intentionally left blank.

# SWPF DOCUMENTED SAFETY ANALYSIS

# CHAPTER 9.0
# RADIOACTIVE, HAZARDOUS, AND MIXED WASTE MANAGEMENT

This page intentionally left blank.

# TABLE OF CONTENTS

**9.0 RADIOACTIVE, HAZARDOUS, AND MIXED WASTE MANAGEMENT ..... 9.1-1**

**9.1 Introduction ..... 9.1-1**
**9.2 Requirements ..... 9.2-1**
**9.3 Radioactive and Hazardous Waste Management Program and Organization ..... 9.3-1**
**9.4 Radioactive and Hazardous Waste Streams and Sources ..... 9.4-1**
**9.4.1 Waste Management Process ..... 9.4-1**
**9.4.2 Waste Sources and Characteristics ..... 9.4-2**
**9.4.3 Waste Handling ..... 9.4-2**
**9.5 Tables ..... 9.5-1**
**9.6 References ..... 9.6-1**

## List of Tables

**Table 9.4-1 Possible SWPF Radioactive, Hazardous, Mixed and TRU Waste Types .. 9.5-1**

# LIST OF ACRONYMS AND ABBREVIATIONS

| | |
|---|---|
| DOT | Department of Transportation |
| DWPF | Defense Waste Processing Facility |
| GCO | Generator Certification Official |
| $HNO_3$ | Nitric Acid |
| HW | Hazardous Waste |
| LLW | Low level Waste |
| LW | Liquid Waste |
| MW | Mixed Waste |
| NaOH | Sodium Hydroxide |
| RCRA | Resource Conservation and Recovery Act |
| S/RID | Standards/Requirements Identification Document |
| SPF | Saltstone Production Facility |
| SRS | Savannah River Site |
| SWPF | Salt Waste Processing Facility |
| TRU | Transuranic |
| WAC | Waste Acceptance Criteria |

# 9.0 RADIOACTIVE, HAZARDOUS, AND MIXED WASTE MANAGEMENT

## 9.1 Introduction

This chapter discusses the radioactive, hazardous, and mixed waste management program for the Salt Waste Processing Facility (SWPF). It includes the following aspects:

- Radioactive and hazardous material waste management policy, objectives, and philosophy;
- Waste management program and organization; and
- Identification of waste streams, including types, sources, and quantities.

The SWPF treats radioactive liquid waste (LW) from the Savannah River Site (SRS) H- and F-Area Tank Farms. The process outputs two LW streams to the Defense Waste Processing Facility (DWPF) and a LW stream that has an ultimate destination of the Saltstone Production Facility (SPF).

Derived from the process is miscellaneous solid and LW variously consisting of low-level radioactive waste (LLW), hazardous waste (HW), mixed waste (MW), and transuranic (TRU) waste as described in Subchapter 9.4.

Gaseous waste is released to the environment via the SWPF Building Exhaust Stack and the Cold Chemicals Area exhaust fans. Emissions of chemicals and toxic air emissions are below levels of regulatory concern and have been exempted from permitting and sampling/analysis requirements.

This page intentionally left blank.

## 9.2 Requirements

S-RCP-J-00001, *SWPF Standards/Requirements Identification Document*[1] (S/RID), lists codes, standards, and regulations governing the Radioactive and Hazardous Waste Management Program of SWPF. Programmatic compliance assessments are performed against the S/RIDs and documented as specified in S-RCP-J-00002, *SWPF Standards/Requirements Identification Document Compliance Plan*[2].

This page intentionally left blank.

## 9.3 Radioactive and Hazardous Waste Management Program and Organization

Solid radioactive, hazardous, mixed and transuranic waste generated at SWPF is managed in accordance with V-WCP-J-00003, *SWPF Waste Certification Plan*[3]. The program consists of V-WCP-J-00002, *SWPF Radioactive Waste Management Basis*[4] and V-WCP-J-00003[3]. It meets the requirements of Site Manual 1S, *SRS Radioactive Waste Requirements Manual*[5], and Site Manual 19Q, *Transportation Safety Manual*[6] and is approved and authorized by SRS Solid Waste Engineering. The Waste Certification Program addresses waste generator requirements, including:

- Waste characterization,
- Identification of waste disposition,
- Waste certification,
- Transfer of responsibility,
- Storage and staging, and
- Packaging and transportation.

SWPF generates small amounts of LLW, HW, MW, and TRU waste that is transferred to an onsite or offsite disposal facility for final disposition. Waste generated by the SWPF is characterized and packaged in accordance with the SWPF Waste Characterization Program to be in compliance with the receiving disposal facility's Waste Acceptance Criteria (WAC). Responsibility for transportation, storage, and disposition of WAC compliant waste is transferred to the disposal facility when the waste is picked up at the SWPF loading dock. Management of the day-to-day operations for the receipt, storage, and disposition of radioactive and hazardous waste at SWPF is described in Subsection 17.3.

In addition to Waste Certification Program requirements, handling and storage of radioactive waste is performed in accordance with the SWPF Radiological Protection Program and implementing procedures. Handling and storage of HW potentially derived from nitric acid ($HNO_3$), sodium hydroxide (NaOH), and spent solvent is performed in accordance with requirements of the SWPF Worker Safety and Health Program and implementing chemical handling procedures.

The Waste Certification Program specifies training and qualification requirements for waste management personnel, designates authority to certify and release waste for shipment, and generates the documentation required for waste generation, characterization, shipment, and certification.

This page intentionally left blank.

## 9.4 Radioactive and Hazardous Waste Streams and Sources

Projected SWPF LLW, HW, MW, and TRU waste types are presented in Table 9.4-1. A summary of projected annual quantities for each waste type are provided in V-ESR-J-00003, *SWPF Radioactive Solid Waste, Mixed Waste, and Hazardous Waste Interface Control Document (ICD-03)*[7]. The SWPF generates incidental LLW derived from contaminated failed equipment, filtration equipment, waste from routine sampling and analysis activities, and personal protective equipment contaminated during maintenance activities.

### 9.4.1 Waste Management Process

SWPF implements and maintains a Waste Certification Program (V-WCP-J-00003[3]) that follows the radioactive and hazardous waste management policies and philosophies discussed in Site Manuals 1S[5] and 19Q[6]. The Waste Certification Program (V-WCP-J-00003[3]) identifies and manages the secondary waste streams generated by SWPF, identifies responsibilities, references handling, sampling, labeling, training, and other applicable guidance. The Waste Certification Program (V-WCP-J-00003[3]) identifies the procedures utilized in managing the secondary waste generated for each waste type. The organizational structure identified is consistent with that in Chapter 17. The handling, segregating, characterizing, packaging, manifesting, and shipping of secondary waste is managed in accordance with appropriate procedures.

SWPF has adopted a comprehensive approach to waste reduction and has applied it to all types of secondary waste streams generated in the facility in Q-PLN-J-0099, SWPF Project Pollution Prevention Plan[8]. The first priority in waste reduction is to eliminate or minimize the generation of waste through source reduction when practical. The second priority is to identify materials that are candidates for recycle or reuse. Waste that is not a candidate for recycle/reuse will be appropriately dispositioned in accordance with existing regulations to reduce overall volume.

The Waste Certification Program requires that LLW, HW, MW, and TRU waste generated in the SWPF be packaged in U.S. Department of Transportation (DOT) approved containers for off-site shipments. On-site shipments utilize appropriately approved containers as defined by Site Manual 1S[5]. SWPF is responsible for providing the necessary technical data to meet applicable WAC(s), Site Manuals 1S[5] and 19Q[6] requirements. The SWPF Environmental, Safety, and Health personnel and Radiological Protection personnel are responsible for obtaining radiation survey/assay data of the container, or sampling and analysis of the container contents, in order to characterize the waste. The waste package and container information is entered into the SWPF waste inventory control database. Filled waste containers are stored in an approved waste staging area inside the SWPF, in accordance with Waste Certification Program staging requirements, until they can be transported to the disposal facility.

The Waste Certification Program requirements, waste management procedures, and practices ensure that the waste acceptance requirements of facilities receiving LLW, HW, MW, and TRU waste for disposal are met. Waste certification records that track the disposition of SWPF generated LLW, HW, MW, and TRU waste are maintained for the duration of the SWPF Project.

### 9.4.2 Waste Sources and Characteristics

LLW generated by the SWPF is characterized by authorized SWPF Waste Management personnel to ensure safe management and compliance with the waste acceptance requirements of the waste receiving facility(ies). The Waste Certification Program ensures that characterization data include: physical and chemical characteristics; volume, weight, identities, activities, and concentrations of major radionuclides; and the generating source.

All HW and MW generated by the SWPF is handled, sampled, characterized, packaged, staged, and shipped in accordance with the SWPF Waste Certification Program. Chemicals used in the SWPF process are considered potential waste streams. The output streams to DWPF and SPF are considered MW only if released from their primary and secondary containment, or their intended means of conveyance and transfer. Process chemicals become waste if they lose their effectiveness (spent chemicals) and are removed from the system, or if they are spilled and are unrecoverable.

Twenty percent $HNO_3$ can react exothermically if water is added to its concentrated form. The Nitric Acid Receipt Tank (TK-304) is the only tank with acid of sufficiently high concentration to be a potential precursor to a reactive waste. Waste generation from this tank is considered reactive until neutralized.

Twenty percent $HNO_3$ and 50 percent NaOH can result in the generation of characteristic corrosive HW. The Waste Certification Program requires that spills or waste derived from these sources be neutralized, sampled, characterized, packaged, and shipped to an approved onsite treatment facility for discharge to the permitted outfall, or disposed of by a commercial wastewater vendor. The neutralized corrosives are not HW and may be stored in the Neutralization Tank (TK-317) for more than 90 days.

TRU waste generated by the SWPF is handled, sampled, characterized, packaged, stored, and shipped in accordance with the Waste Certification Program. Great efforts are taken to reduce or eliminate TRU waste consisting mainly of laboratory samples. A clogged cross-flow filter is a potential TRU waste stream, but may be managed to ensure it is LLW.

### 9.4.3 Waste Handling

The Waste Certification Program requirements, policies, and procedures for transferring custody of LLW, HW, MW, and TRU waste ensures that no waste is transferred to an onsite disposal facility until the receiving facility's Generator Certification Official (GCO) authorizes the transfer via a written agreement, in accordance with Site Manuals, 1S[5] and 19Q[6]. If an offsite disposal facility is utilized, the responsible Waste Certification Official authorizes the waste shipment via an approved Waste Profile Sheet, in accordance with the receiving facility's WAC. The SWPF GCO generates manifests for the waste receiving facility to sign upon transfer of the waste. Waste characterization data, container information, generation, storage, treatment, and transportation information is transferred with, or is traceable to, the waste.

LLW that has an identified path to disposal is not stored longer than one year prior to disposal, unless authorized by the U.S. Department of Energy.

All potential HW or MW is analyzed to determine if it should be characterized as a Resource Conservation and Recovery Act (RCRA)[9] toxic waste.

TRU waste packaging complies with Site Manuals 1S[5], 19Q[6], and DOT waste packaging requirements for shipments to the Waste Isolation Pilot Plant. Responsibility for transportation, storage, and disposition of WAC compliant TRU waste is transferred from the SWPF to the Liquid Waste Operations Contractor when the waste is picked up at the SWPF loading dock.

This page intentionally left blank.

## 9.5 Tables

### Table 9.4-1 Possible SWPF Radioactive, Hazardous, Mixed and TRU Waste Types

| Classification | | Description |
|---|---|---|
| LLW | Dry Active Waste | Job Control waste, sample vials, other contaminated solids packaged in B-25 boxes or other approved containers. |
| LLW | Process Equipment | Failed equipment to be decontaminated and transferred to the SRS Solid Waste Management Facility for disposal as LLW. |
| LLW | Alpha Sorption Filtration Equipment | Failed filter unit due to leak, break, or plug. |
| TRU | TRU Waste | Alpha concentration and SWPF inventory is projected to be too low to generate any solid waste that would be classified as TRU. |
| HW | HW | Oils, grease, cleaning solvents sorbed on solid, hazardous metals or chemicals, other materials classified as HW. |
| MW | MW Solids | HW potentially contaminated with low concentrations of radioactive species. |

This page intentionally left blank.

## 9.6 References

[1] S-RCP-J-00001, *SWPF Standards/Requirements Identification Document*. Parsons, Aiken, South Carolina.

[2] S-RCP-J-00002, *SWPF Standards/Requirements Identification Document Compliance Plan*. Parsons, Aiken, South Carolina.

[3] V-WCP-J-00003, *SWPF Waste Certification Plan*. Parsons, Aiken, South Carolina.

[4] V-WCP-J-00002, *SWPF Radioactive Waste Management Basis.* Parsons, Aiken, South Carolina.

[5] Site Manual 1S, *Radioactive Waste Requirements Manual*. Savannah River Site, Aiken, South Carolina.

[6] Site Manual 19Q, *Transportation Safety Manual*. Savannah River Site, Aiken, South Carolina.

[7] V-ESR-J-00003, *SWPF Radioactive Solid Waste, Mixed Waste, and Hazardous Waste Interface Control Document (ICD-03)*. Parsons, Aiken, South Carolina.

[8] Q-PLN-J-0099, *SWPF Project Pollution Prevention Plan*. Parsons, Aiken, South Carolina.

[9] Resource Conservation and Recovery Act (RCRA). Pub. L. No 94-580 42 USC §6901 et seq., as amended. 1976.

This page intentionally left blank.

# SWPF DOCUMENTED SAFETY ANALYSIS

# CHAPTER 10.0
# INITIAL TESTING, IN-SERVICE SURVEILLANCE, AND MAINTENANCE

This page intentionally left blank.

# TABLE OF CONTENTS

**10.0 INITIAL TESTING, IN-SERVICE SURVEILLANCE, AND MAINTENANCE 10.1-1**

**10.1 Introduction ..... 10.1-1**
**10.2 Requirements ..... 10.2-1**
**10.3 Initial Testing Program ..... 10.3-1**
**10.4 In-Service Surveillance Program ..... 10.4-1**
**10.5 Maintenance Program ..... 10.5-1**
**10.6 References ..... 10.6-1**

# LIST OF ACRONYMS AND ABBREVIATIONS

| | |
|---|---|
| ASME | American Society for Mechanical Engineers |
| CFR | Code of Federal Regulations |
| CMMS | Computerized Maintenance Management System |
| CSSX | Caustic-side Solvent Extraction |
| ISOT | Integrated System Operational Test |
| IWR | Integrated Water Run |
| M&TE | Measuring and Test Equipment |
| QA | Quality Assurance |
| QAP | Quality Assurance Plan |
| SSC | Structure, System, and Component |
| SOT | System Operational Test |
| SWPF | Salt Waste Processing Facility |

# 10.0 INITIAL TESTING, IN-SERVICE SURVEILLANCE, AND MAINTENANCE

## 10.1 Introduction

This chapter describes the following programs for the Salt Waste Processing Facility (SWPF):

- Initial testing;
- In-service surveillance; and
- Planned, predictive, preventive, and corrective facility maintenance.

P-SUP-J-00001, *SWPF Commissioning Plan*[1], V-QP-J-00001, *SWPF Quality Assurance Plan*[2] (QAP), and V-PMP-J-00062, *SWPF Nuclear Maintenance Management Program Description Document*[3], describe these programs in more detail.

This page intentionally left blank.

## 10.2 Requirements

S-RCP-J-00001, *SWPF Standards/Requirements Identification Document*[4], states the codes, standards, and regulations governing initial testing, in-service surveillance, and maintenance programs at SWPF. Programmatic compliance assessments are performed against S-RCP-J-00001[4] and documented as specified in S-RCP-J-00002, *SWPF Standards/Requirements Identification Document Compliance Plan*[5].

This page intentionally left blank.

## 10.3 Initial Testing Program

P-SUP-J-00001[1] describes an overall program plan for achieving a Startup and Test Program compliant Title 10 Code of Federal Regulations (CFR) 830, *Nuclear Safety Management*[6], and The American Society for Mechanical Engineers (ASME) NQA-1-2008/09a, *Quality Assurance Requirements for Nuclear Facility Applications*[7]. P-SUP-J-00001[1] also describes a process for ensuring that all component, system, and integrated system requirements and criteria are appropriately identified, and that the Startup and Test Program produces objective, documented, and traceable evidence that these requirements and criteria are adequately verified.

Following completion of construction a series of tests commence, with each test requiring a more complex level of performance demonstration. The most basic level of testing, calibration, grooming, and alignment, includes the calibration checks of instrumentation and controls, functional checkout of control circuits, and initial component testing and operation. The next phase of testing, System Operational Testing, will demonstrate the overall ability of plant systems to meet their intended performance and functional requirements. System Operational Testing includes ensuring that items listed in the Attribute Verification Database are appropriately tested (PL-CM-8010, *SWPF SOT Plan*[8]). The Attribute Verification Database documents the acceptance criteria for the test. Performance attributes are prepared for all SS testable features (interlocks, alarms, etc.), select control sequences where additional test requirements or data acquisition is required, and required system performance parameters. The Attribute Verification Database links each performance attribute to the specific System Operational Test in which it is tested (PP-EN-5027, *Attribute Verification Database Procedure*[9]). Results from the System Operational Tests are documented in Test Results Reports (DP-CM-8010, *Test Results Review and Approval*[9]). The Joint Test Group and the Commissioning Review Board review and approve both the System Operational Test procedures, and the Test Results Reports.

Once the systems associated with a major unit operation have successfully completed System Operational Testing, an Integrated System Operational Test (ISOT) will be conducted to demonstrate the integrated operation and control of the multiple systems that are required to perform a major unit operation in the plant. On completion of ISOTs, the Integrated Water Runs (IWRs) testing commences. This testing initially operates the Plant as a complete unit, to the extent allowed using only water.

Upon successful completion and approval of System Operational Tests (SOTs), ISOTs, and the initial phase of IWRs, jurisdictional control of the plant process systems will be transferred to Plant Operations. Following transfer of plant jurisdictional control to Operations and a satisfactory Management Self-Assessment, non-radioactive waste simulant and process chemicals, including Caustic-side Solvent Extraction (CSSX) solvent will be introduced. The balance of tests requiring density adjusted waste simulant and process chemicals will then be performed. Following successful completion of testing and systemization of the CSSX system, the IWR phase will conclude and Cold Commissioning will commence. Process verification testing will be performed at full-scale operations with actual plant equipment using the nonradioactive waste simulant and the normal contingent of cold chemicals.

Configuration controls are established for changes to structures, systems, and components in accordance with P-CDM-J-00001, *SWPF Configuration Management Plan*[10], and P-DB-J-00002, *SWPF Design Criteria Database*[11]. The process includes verification that documented post-modification testing (see PP-MN-8738, *Post Maintenance Testing*[9]) is carried out to reflect the approved design and physical implementation.

## 10.4 In-Service Surveillance Program

The In-service Surveillance Program is described in V-QP-J-00001[2]. Tests required for the collection of data, to verify conformance of an item or computer program to specified requirements, or to demonstrate satisfactory performance for service will be planned and executed. Test results will be documented and their conformance with test requirements and acceptance criteria will be evaluated.

Test requirements and acceptance criteria will be provided or approved by the responsible design organization. Required tests, including, as appropriate, prototype qualification tests, production tests, proof tests prior to installation, construction tests, preoperational tests, operational tests, and computer program tests (such as software design verification, factory acceptance, site acceptance, and in-use tests) will be controlled under appropriate environmental conditions using the tools and equipment necessary to conduct the test in a manner to fulfill test requirements and acceptance criteria. The tests performed will obtain the necessary data with sufficient accuracy for evaluation and acceptance. Test requirements and acceptance criteria will be based upon specified requirements contained in applicable design documents, or other pertinent technical documents that provide approved requirements. Cognizant System Engineers generate periodic System Health Reports from various sources of information (e.g., post-maintenance test results, surveillance test results) on the performance of designated facility systems per PP-EN-5035, *System Health Reporting and Operability Assessments*[9].

Tools, gages, instruments, and other Measuring and Test Equipment (M&TE) used for activities affecting quality will be controlled, calibrated at specific periods, adjusted, and maintained to required accuracy limits. Selection of M&TE will be based on the type, range, accuracy, and tolerance needed to accomplish the required measurements for determining conformance to specified requirements.

Reports of conditions that are adverse to quality are analyzed to identify trends in quality performance. Significant conditions adverse to quality and significant trends are reported to executive management.

A tiered approach to verification and assessment includes self-checking by the individuals performing the work, supervision and review by leads, independent inspection, surveillance, and verification to confirm adequacy and effectiveness of results. Managers are required to assess the effectiveness of their own operations, implementation of their portion of the QAP (V-QP-J-00001[2]), and regulatory programs. Quality Assurance (QA) personnel perform audits and independent assessments to review, evaluate, and verify effectiveness of the QAP (V-QP-J-00001[2]) implementation.

SWPF personnel performing or managing activities affecting quality will receive indoctrination in their job responsibilities and authority, general criteria, technical objectives, including applicable codes and standards, regulatory commitments, company procedures, and QA program requirements. Facility personnel performing work will be capable of performing assigned tasks. Training requirements will be developed and implemented for personnel and for specific job

categories, as appropriate to the scope of work to which they will be assigned in accordance with PL-TR-1801, *SWPF Personnel Selection, Training, and Qualification Plan*[12]. Qualification requirements are established for specific job categories including personnel performing surveillances.

## 10.5 Maintenance Program

The SWPF Maintenance Program is described in V-PMP-J-00062[3]. The program includes the following:

- Maintenance organization and administration,
- Training and qualification of maintenance personnel,
- Maintenance facilities equipment and tools,
- Post maintenance testing,
- Control and calibration of measuring and test equipment, and
- Maintenance history and trending.

The SWPF organizational structure and roles and responsibilities for key management positions (including Maintenance) are maintained in project documents referenced in V-PMP-J-00062[3]. As the SWPF proceeds from one phase to another, staffing and the organization structure will be modified to meet the specific demands of each phase. The current Facility Organization Chart is available on internal SWPF web pages. It is this structure that integrates and relates Project work (technical, schedule, and cost) and is used throughout the life cycle of the Project. Initial staffing levels for Maintenance are described in applicable SWPF plans.

The program for Maintenance training describes the structure and administration of the Maintenance Training Program as it applies to the development, implementation, and administration of training. Training requirements for Maintenance personnel are implemented via procedures referenced in V-PMP-J-00062[3].

The Maintenance organization is provided with a number of workshop facilities to efficiently support facility maintenance and maintenance training functions. There are four types of workshops in uncontrolled or “clean areas” where maintenance on uncontaminated equipment will be performed:

1. Mechanical,
2. Electrical,
3. Instrument, and
4. General.

These workshops will be equipped with various machine tools such as lathes, milling machines, and grinders to perform the majority of repairs and maintenance work onsite.

Additionally, there will be two controlled area workshops where maintenance work can be performed on equipment that has been in contact with the process. One workshop is on the first floor. This workshop will be furnished to allow the decontamination and repair of process equipment, such as pumps and instrumentation, without spreading contamination to other areas

of the plant. The other controlled area workshop is within the laboratory area. This area is primarily intended for laboratory equipment repair, such as manipulators and sampling related equipment.

Post Maintenance Testing ensures that the original deficiency was corrected and no new or related problems have been created by the maintenance activity. Procedures referenced in V-PMP-J-00062[3], implement the requirement to verify that Structures, Systems, and Components (SSCs) are capable of performing their intended function when returned to service following maintenance.

The requirements for M&TE used by Maintenance personnel for inspection and acceptance of the Maintenance work activities are described in procedures referenced in V-PMP-J-00062[3], including requirements for calibration of M&TE, control of the standards, services and resources needed for the calibration processes, and use of external resources for calibration activities.

Maintenance history will be maintained in the Computerized Maintenance Management System (CMMS) as required by procedure. The CMMS will also be used to support work planning, performance trending, and cause analysis. This information will be used as a basis for improving equipment reliability and availability. All maintenance work is initiated in accordance with applicable procedure(s). Maintenance Work Packages created against SSCs that have a functional classification of Safety Significant or General Service-1 (specialty equipment) are reviewed by the Cognizant System Engineer responsible for the configuration, health, and operability of the applicable system. Work performed on other SSCs will be reviewed by Maintenance Engineers.

## 10.6 References

[1] P-SUP-J-00001, *SWPF Commissioning Plan*. Parsons, Aiken, South Carolina.

[2] V-QP-J-00001, *SWPF Quality Assurance Plan*. Parsons, Aiken, South Carolina.

[3] V-PMP-J-00062, *SWPF Nuclear Maintenance Management Program Description Document*. Parsons, Aiken, South Carolina.

[4] S-RCP-J-00001, *SWPF Standards/Requirements Identification Document*. Parsons, Aiken, South Carolina.

[5] S-RCP-J-00002, *SWPF Standards/Requirements Identification Document Compliance Plan*. Parsons, Aiken, South Carolina.

[6] 10 CFR 830, *Nuclear Safety Management*.

[7] ASME NQA-1-2008/09a, *Quality Assurance Requirements for Nuclear Facility Applications*. American Society of Mechanical Engineers, New York, New York. August 31, 2009.

[8] PL-CM-8010, *SWPF SOT Plan*. Parsons, Aiken, South Carolina.

[9] *Salt Waste Processing Facility Project Procedures Manual*. Parsons, Aiken, South Carolina.

[10] P-CDM-J-00001, *SWPF Configuration Management Plan*. Parsons, Aiken, South Carolina.

[11] P-DB-J-00002, *SWPF Design Criteria Database*. Parsons, Aiken, South Carolina.

[12] PL-TR-1801, *SWPF Personnel Selection, Training, and Qualification Plan*. Parsons, Aiken, South Carolina.

This page intentionally left blank.

# SWPF DOCUMENTED SAFETY ANALYSIS

# CHAPTER 11.0
# OPERATIONAL SAFETY

This page intentionally left blank.

# TABLE OF CONTENTS

**11.0 OPERATIONAL SAFETY ..... 11.1-1**

**11.1 Introduction ..... 11.1-1**
**11.2 Requirements ..... 11.2-1**
**11.3 Conduct of Operations ..... 11.3-1**
**11.4 Fire Protection ..... 11.4-1**
**11.4.1 Fire Hazards ..... 11.4-1**
**11.4.2 Fire Protection Program and Organization ..... 11.4-1**
**11.4.3 Combustible Loading Control ..... 11.4-2**
**11.4.4 Fire-Fighting Capabilities ..... 11.4-2**
**11.4.5 Fire-Fighting Readiness Assurance ..... 11.4-2**
**11.5 References ..... 11.5-1**

# LIST OF ACRONYMS AND ABBREVIATIONS

| | |
|---|---|
| DOE | U.S. Department of Energy |
| FPP | Fire Protection Program |
| DSA | Documented Safety Analysis |
| FHA | Fire Hazards Analysis |
| SRS | Savannah River Site |
| SWPF | Salt Waste Processing Facility |

# 11.0 OPERATIONAL SAFETY

## 11.1 Introduction

This chapter discusses general aspects of operational safety and fire protection in the Salt Waste Processing Facility (SWPF). It is based on P-CMP-J-00001, *SWPF Conduct of Operations Manual*[1], and F-PP-J-00001, *SWPF Fire Protection Program Plan*[2]. The scope includes the following:

- Identification of the aspects of SWPF Conduct of Operations,
- Integrated summary of the main features of the SWPF Conduct of Operations Program, and
- Description of the SWPF Fire Protection Program (FPP).

This page intentionally left blank.

## 11.2 Requirements

S-RCP-J-00001, *SWPF Standards/Requirements Identification Document*[3], states the codes, standards, and regulations governing operational safety and FPP elements for SWPF. Programmatic compliance assessments are performed against S-RCP-J-00001[3] as specified in S-RCP-J-00002, *SWPF Standards/Requirements Identification Document Compliance Plan*[4].

This page intentionally left blank.

## 11.3 Conduct of Operations

Each of the eighteen topical areas identified in Section 2 of the U.S. Department of Energy (DOE) O 422.1, Chg. 2, *Conduct of Operations*[5], as requirements for facility Conduct of Operations programs are established and maintained by P-CMP-J-00001[1]. Thus, P-CMP-J-00001[1] serves as the master control document that manages the implementation of the Conduct of Operations program. This section summarizes that each of the eighteen topical areas is applicable to SWPF. The detailed management and implementation for each topical area is addressed in P-CMP-J-00001[1].

The salient features of the SWPF conduct of operations program are briefly identified by the titles of implementing procedures, which correspond to the DOE O 422.1, Chg. 2[5]requirements:

- Organization and Administration;
- Shift Routines and Operating Practices;
- Control Area Activities;
- Communications;
- On-shift Training;
- Investigation of Abnormal Events, Conditions and Trends;
- Notifications;
- Control of Equipment and Systems Status;
- Lockouts and Tagouts;
- Independent Verification;
- Logkeeping;
- Turnover and Assumption of Responsibilities;
- Control of Interrelated Processes;
- Operating Experience Program (which includes required reading);
- Timely Instructions/Orders;
- Procedure Administration and Procedure Compliance (which combine to address aspects of technical procedures);
- Operator Aids; and
- Component Labeling.

This page intentionally left blank.

## 11.4 Fire Protection

Fire protection for the SWPF is primarily based on prevention of fires through personnel training, minimization of fixed and transient combustible and flammable materials, and elimination of ignition sources. Mitigation of fires is performed by the SWPF fire detection and suppression systems that are designed, installed, operated, and maintained in accordance with the applicable requirements of the National Fire Protection Association Codes, DOE Orders, and other national codes and standards.

### 11.4.1 Fire Hazards

F-FHA-J-00001, *SWPF Project Fire Hazards Analysis*[6] (FHA), presents a systematic identification and evaluation of the fire hazards associated with the SWPF. The FHA (F-FHA-J-00001[6]) is mandated by DOE O 420.1B, *Facility Safety*[7] for facility design, by DOE O 420.1C, Chg. 1, *Facility Safety*[8], for operations, and DOE O 440.1B, *Worker Protection Program for DOE (Including the National Nuclear Security Administration) Federal Employees*[9], and conforms to DOE-STD-1066-99, *Fire Protection Design Criteria*[10]. PP-EN-5022, *Preparation of Fire Hazards Analysis*[11], describes the methodology for the FHA (F-FHA-J-00001[6]). The FHA (F-FHA-J-00001[6]) supports this Documented Safety Analysis (DSA), but is an independent analysis. The FHA (F-FHA-J-00001[6]) was developed by using a graded approach. This graded approach allows the appropriate level of resources to be applied to areas of the analysis based on the complexity of the process, level of hazards, relative risk, and consequences of fire.

The FHA (F-FHA-J-00001[6]) concludes that, provided the identified issues are addressed prior to start-up, the level of protection from fire-related loss is sufficient to achieve the highly protected risk and life safety objectives set forth by DOE.

In summary, there are no undue hazards to the public from fire and its effects on DOE facilities. This objective is met because the consequences from a chemical or radiological release do not exceed the onsite or offsite limits. A fire in this facility will not cause an offsite release of radioactive material or other hazardous material that will threaten public health and safety or the environment because the offsite limits for chemical and/or radiological releases are not challenged.

### 11.4.2 Fire Protection Program and Organization

The SWPF FPP and supporting procedures implement the applicable requirements of DOE O 420.1B[7], DOE O 420.1C, Chg. 1[8], DOE O 440.1B[9], and DOE G 420.1-3, *Implementation Guide for DOE Fire Protection and Emergency Services Programs for Use with DOE O 420.1B, Facility Safety*[12].

At a minimum, the SWPF organization includes an individual who is responsible for coordinating testing and maintenance of the fire protection systems, whether these activities are performed by SWPF personnel or contractors. When required, the services of a qualified Fire Protection Engineer are provided. Control of the physical and administrative interfaces for the SWPF FPP and Fire Detection/Suppression Systems is implemented by V-ESR-J-00012, *SWPF Emergency Response Interface Control Document (ICD-12)*[13], V-ESR-J-00013, *SWPF Telecommunications*

*and Controls Datalink System Interface Control Document (ICD-13*)[14], and V-ESR-J-00017, *SWPF Fire Protection Water System Interface Control Document (ICD-17*)[15].

### 11.4.3 Combustible Loading Control

Combustible material management is practiced at the SWPF. Combustible loadings limits are established for key waste processing locations (i.e., West Caustic-side Solvent Extraction Tank Cell, Pump and Valve Galleries, and Alpha Finishing Facility process room) within the facility. The "dark cells" are virtually free of combustible materials and isolated during normal operations. Environmental, Safety, and Health, and Quality Assurance staff performs routine inspections to ensure compliance with posted limits at a frequency defined by applicable procedures. Any areas in question are identified to the Shift Operations Manager for prompt corrective action as required.

### 11.4.4 Fire-Fighting Capabilities

The portable and installed components of the Fire Detection/Suppression Systems are described in Subsection 2.7.1 of this DSA. For incipient fires, portable fire extinguishers may be used by SWPF personnel. All other SWPF fire-fighting activities are performed by the Savannah River site (SRS) Fire Department, which has approved Fire Control Pre-plans to direct its attack on the fire. The Fire Department's Fire Control Pre-plans and the SWPF FPP address special precautions taken during fire-fighting in radiological and hazardous chemical environments.

If a fire alarm is activated, SWPF personnel evacuate the facility and go to a safe rally point. The Shift Operations Manager contacts the SRS Emergency Duty Officer and requests response from the SRS Fire Department. The Emergency Operating Procedures and the Emergency Preparedness Implementing Procedures describe the SWPF organization that performs the initial response to facility fire events and the turnover of incident scene control to the SRS Fire Department.

### 11.4.5 Fire-Fighting Readiness Assurance

Periodic testing and maintenance of the Fire Detection/Suppression Systems is performed by qualified personnel, sub-contractors, or vendors. Deficiencies are documented and tracked to closure in accordance with FPP requirements. Periodic inspections are performed to verify compliance with FPP limits for fixed and transient combustible materials.

Annual fire drills are conducted. These tests are designed to test the total capabilities of the FPP over a period of every five years.

Records of tests, inspections program assessments, and fire drills are maintained in SWPF files.

## 11.5 References

[1] P-CMP-J-00001, *SWPF Conduct of Operations Manual*. Parsons, Aiken, South Carolina.

[2] F-PP-J-00001, *SWPF Fire Protection Program Plan*. Parsons, Aiken, South Carolina.

[3] S-RCP-J-00001, *SWPF Standards/Requirements Identification Document*. Parsons, Aiken, South Carolina..

[4] S-RCP-J-00002, *SWPF Standards/Requirements Identification Document Compliance Plan*. Parsons, Aiken, South Carolina.

[5] DOE O 422.1, Chg. 2, *Conduct of Operations*. U.S. Department of Energy, Washington, D.C.

[6] F-FHA-J-00001, *SWPF Project Fire Hazards Analysis*. Parsons, Aiken, South Carolina.

[7] DOE O 420.1B, *Facility Safety*. U.S. Department of Energy, Washington, D.C.

[8] DOE O 420.1C, Chg. 1, *Facility Safety*. U.S. Department of Energy, Washington, D.C.

[9] DOE O 440.1B, *Worker Protection Program for DOE (Including the National Nuclear Security Administration) Federal Employees*. U.S. Department of Energy, Washington, D.C.

[10] DOE-STD-1066-99, *Fire Protection Design Criteria*. U.S. Department of Energy, Washington, D.C.

[11] *Salt Waste Processing Facility Project Procedures Manual*. Parsons, Aiken, South Carolina.

[12] DOE G 420.1-3, *Implementation Guide for DOE Fire Protection and Emergency Services Programs for Use with DOE O 420.1B, Facility Safety*. U.S. Department of Energy, Washington, D.C.

[13] V-ESR-J-00012, *SWPF Emergency Response Interface Control Document (ICD-12)*. Parsons, Aiken, South Carolina.

[14] V-ESR-J-00013, *SWPF Telecommunications and Controls Datalink System Interface Control Document (ICD-13*). Parsons, Aiken, South Carolina.

[15] V-ESR-J-00017, *SWPF Fire Protection Water System Interface Control Document (ICD-17*). Parsons, Aiken, South Carolina.

This page intentionally left blank.

# SWPF DOCUMENTED SAFETY ANALYSIS

# CHAPTER 12.0
# PROCEDURES AND TRAINING

This page intentionally left blank.

# TABLE OF CONTENTS

**12.0 PROCEDURES AND TRAINING ..... 12.1-1**

**12.1 Introduction ..... 12.1-1**
**12.2 Requirements ..... 12.2-1**
**12.3 Procedure Program ..... 12.3-1**
**12.3.1 Development of Procedures ..... 12.3-1**
**12.3.2 Maintenance of Procedures ..... 12.3-1**
**12.4 Training Program ..... 12.4-1**
**12.4.1 Development of Training ..... 12.4-1**
**12.4.2 Maintenance of Training ..... 12.4-1**
**12.4.3 Modification of Training Materials ..... 12.4-2**
**12.5 References ..... 12.5-1**

# LIST OF ACRONYMS AND ABBREVIATIONS

| | |
|---|---|
| ISMS | Integrated Safety Management System |
| PL | Plan |
| PP | Project Procedure |
| SAT | Systematic Approach to Training |
| S/RID | Standards/Requirements Identification Document |
| SWPF | Salt Waste Processing Facility |

# 12.0 PROCEDURES AND TRAINING

## 12.1 Introduction

This chapter discusses general aspects of the process by which the technical content of procedures and training is developed, verified, and validated, and the mechanisms used to identify and correct technical or human factors deficiencies in procedures and training programs. It is based on the Salt Waste Processing Facility (SWPF) Conduct of Operations Manual (P-CMP-J-00001[1]); V-SCD-J-00002, *SWPF Procedure Writer's Guide*[2], and Plan (PL)-TR-1801, *SWPF Personnel Selection, Training, and Qualification Plan*[3].

This page intentionally left blank.

## 12.2 Requirements

S-RCP-J-00001, *SWPF Standards/Requirements Identification Document*[4] (S/RID), states the codes, standards, and regulations governing the procedures and training elements of the SWPF. Programmatic compliance assessments are performed against the S/RID (S-RCP-J-00001[4]) as specified in S-RCP-J-00002, *SWPF Standards/Requirements Identification Document Compliance Plan*[5].

This page intentionally left blank.

## 12.3 Procedure Program

The SWPF follows the procedure program as discussed in the SWPF Conduct of Operations Manual (P-CMP-J-00001[1]) and V-SCD-J-00002[2]. The SWPF safety management policy is that procedures are to promote safe and efficient operations.

### 12.3.1 Development of Procedures

The SWPF follows the systematic development of procedures in accordance with applicable orders and standards as discussed in the SWPF Conduct of Operations Manual (P-CMP-J-00001[1]) and V-SCD-J-00002[2]. The process comprises the following aspects:

- Procedure Preparation,
- Procedure Verification, and
- Procedure Validation.

The systematic identification of purpose, scope, and content for each required and desired procedure supports the SWPF Integrated Safety Management System (ISMS) by providing techniques and practices to implement the ISMS core functions for developing and implementing hazard controls and performing work within controls. The procedure identification, development, verification, and validation process is consistent as appropriate for the unique needs of normal, abnormal, and emergency operations; and for surveillance testing and maintenance.

### 12.3.2 Maintenance of Procedures

The SWPF follows the maintenance of procedure program as discussed in the SWPF Conduct of Operations Manual (P-CMP-J-00001[1]). The provisions for documentation, administration, and appropriate training are provided through the process referenced in P-CMP-J-00001[1]. The following provisions are part of this program with supporting references as indicated:

- Documenting Procedures and Procedure Reviews;
- Procedure Control and Dissemination;
- Project Procedure (PP)-DC-3012, *Document/Administrative Procedure Preparation and Review*[6], and PP-DC-3002, *Records Management*[6]; and
- Procedure Training and Coordination.

The development and review of procedures is subject to the documentation requirements referenced in P-CMP-J-00001[1]. As indicated in P-CMP-J-00001[1], the control and dissemination of procedures ready for field work is managed via Engineering, Procurement, and Construction Document Control. PP-DC-3012[6] provides requirements for preparation, review, and approval of deliverable and non-deliverable documents including procedures. PP-DC-3002[6] governs the content and preservation of the procedure history file. P-CMP-J-00001[1] provides for the

inclusion of Training in the development and revision process. This inclusion aids in the coordination and facilitation of verification of the procedure.

## 12.4 Training Program

SWPF utilizes a Systematic Approach to Training (SAT) as prescribed in DOE O 426.2, Admin Chg 1, *Personnel Selection, Training, Qualification, and Certification Requirements for DOE Nuclear Facilities*[7]. A SAT is implemented via the training program described in PL-TR-1801[3]. The Training program ensures the SWPF workforce maintains competence commensurate with responsibilities to ensure the Safety Management Programs are fully implemented and to ensure safe and cost effective operations.

### 12.4.1 Development of Training

PL-TR-1801[3] provides the process by which technical training is developed, verified, and validated, as well as address training methods and qualification requirements. The following elements are part of the training program with supporting references as indicated:

- Conduct of normal, abnormal, and emergency operations, P-CMP-J-00001[1];
- On-shift and classroom training, P-CMP-J-00001[1] and PL-TR-1801[3];
- Criticality training, N-NCS-J-00002, *SWPF Criticality Safety Program Manual*[8];
- Radiation and hazardous material protection training, S-CIP-J-00004, *SWPF Radiation Protection Program for 10 CFR 835 (Occupational Radiation Protection)*[9], PL-TR-1807, *SWPF Safety/Industrial Hygiene Training Program Description*[10], and PL-TR-1806, *SWPF Radiation Protection Personnel Training Program Description*[11];
- Surveillance testing and maintenance training, PL-TR-1803, *SWPF Maintenance Training Program Description*[12];
- Fire protection training, PL-TR-1802, *SWPF Operations Training Program Description*[13];
- Quality Assurance training, PL-TR-1808, *SWPF Quality Assurance/Quality Control Training Program Description*[14]; and
- Emergency preparedness training, PL-OP-8515, *SWPF Emergency Preparedness Implementation Plan*[15].

The SWPF has established an organization responsible for the training of Project personnel. The responsibilities, qualifications, and authority of training organization personnel is documented, and managerial responsibilities and authority are clearly defined. The Savannah River Site Central Training Department is contracted to perform generic training required for regulatory compliance issues (e.g., General Employee Training and Radiation Worker Training) that have site-wide application and have content that is defined from other sources.

### 12.4.2 Maintenance of Training

SWPF follows the guidance for the maintenance of training programs provided in PL-TR-1801[3]. This plan covers training oversight and assessment, and the maintenance of training records.

The SWPF processes for document creation and revision incorporate mandatory screening by the training organization for potential impact on existing training or the need for new training materials or curricula.

### 12.4.3 Modification of Training Materials

P-CMP-J-00001[1] addresses the process for evaluating the impact of operating experiences on existing training materials.

Methods for evaluating the effectiveness of training are addressed in PL-TR-1801[3]. The effectiveness evaluation includes technical or human factors identification and correction.

## 12.5 References

[1] P-CMP-J-00001, *SWPF Conduct of Operations Manual*. Parsons, Aiken, South Carolina.

[2] V-SCD-J-00002, *SWPF Procedure Writer's Guide*. Parsons, Aiken, South Carolina.

[3] PL-TR-1801, *SWPF Personnel Selection, Training, and Qualification Plan*. Parsons, Aiken, South Carolina.

[4] S-RCP-J-00001, *SWPF Standards/Requirements Identification Document*. Parsons, Aiken, South Carolina.

[5] S-RCP-J-00002, *SWPF Standards/Requirements Identification Document Compliance Plan*. Parsons, Aiken, South Carolina.

[6] *Salt Waste Project Facility Project Procedures Manual*. Parsons, Aiken, South Carolina.

[7] DOE O 426.2, Admin Chg 1, *Personnel Selection, Training, Qualification, and Certification Requirements for DOE Nuclear Facilities*. U.S. Department of Energy. Washington D.C.

[8] N-NCS-J-00002, *SWPF Criticality Safety Program Manual*. Parsons, Aiken, South Carolina.

[9] S-CIP-J-00004, *SWPF Radiation Protection Program for 10 CFR 835 (Occupational Radiation Protection)*. Parsons, Aiken, South Carolina.

[10] PL-TR-1807, *SWPF Safety/Industrial Hygiene Training Program* Description. Parsons, Aiken, South Carolina.

[11] PL-TR-1806, *SWPF Radiation Protection Personnel Training Program Description*. Parsons, Aiken, South Carolina.

[12] PL-TR-1803, *SWPF Maintenance Training Program Description*. Parsons, Aiken, South Carolina.

[13] PL-TR-1802, *SWPF Operations Training Program Description*. Parsons, Aiken, South Carolina.

[14] PL-TR-1808, *SWPF Quality Assurance/Quality Control Training Program Description*. Parsons, Aiken, South Carolina.

[15] PL-OP-8515, *SWPF Emergency Preparedness Implementation Plan*. Parsons, Aiken, South Carolina.

This page intentionally left blank.

# SWPF DOCUMENTED SAFETY ANALYSIS

# CHAPTER 13.0
# HUMAN FACTORS

This page intentionally left blank.

# TABLE OF CONTENTS

**13.0 HUMAN FACTORS ..... 13.1-1**

**13.1 Introduction ..... 13.1-1**
**13.2 Requirements ..... 13.2-1**
**13.3 Human Factors Process ..... 13.3-1**
**13.4 Identification of Human-Machine Interfaces ..... 13.4-1**
**13.5 Optimization of Human-Machine Interfaces ..... 13.5-1**
**13.6 References ..... 13.6-1**

# LIST OF ACRONYMS AND ABBREVIATIONS

| | |
|---|---|
| BPCS | Basic Process Control System |
| DSA | Documented Safety Analysis |
| HMI | Human-Machine Interface |
| NUREG | U.S. Nuclear Regulatory Commission Regulation |
| SIS | Safety Instrumented System |
| SS | Safety Significant |
| SSC | Structure, System, and Component |
| SWPF | Salt Waste Processing Facility |

# 13.0 HUMAN FACTORS

## 13.1 Introduction

Human factors engineering is a process that optimizes total system performance, reliability, and safety by maximizing human performance, minimizing error, and ensuring proper allocation of tasks to the human component in the system. Its goal is to ensure human safety and productivity and reduce the probability of human errors. The manner in which human factors engineering principles are applied to the Salt Waste Processing Facility (SWPF) is discussed below.

This chapter focuses on human factors engineering, its importance to facility safety, and the design of the facility to optimize human performance. Human factors, as discussed in this chapter, are:

- Engineering that focuses on designing facilities, systems, equipment, and tools so they are sensitive to the capabilities, limitations, and needs of humans; and
- Human reliability analysis that quantifies the contribution of human error to the facility risk.

Normal industry practice includes consideration of the human element in development of the detailed facility design. While human factors are considered in all the design, formal human factors evaluations have been performed related to human-machine interface (HMI) for Safety Significant (SS) structures, systems, and components (SSCs).

This page intentionally left blank.

## 13.2 Requirements

S-RCP-J-00001, *SWPF Standards/Requirements Identification Document*[1], lists the codes, standards, and regulations governing the policies and program elements of the SWPF programs that control the application of human factors engineering.

This page intentionally left blank.

## 13.3 Human Factors Process

The SWPF is designed with careful attention to the interfaces between operating personnel and the facility to ensure that good human factors and ergonomics practices are followed. This user-friendly design minimizes errors of omission and commission and enables an operator to respond effectively to those situations in which human response is beneficial or required. Attention to the design and content of controls and displays (both hardware- and software-generated) ensures that clear and unambiguous indications of equipment status are readily available and understood without interpretation. Design attention to physical attributes of equipment, maintenance service envelopes, service assembly and disassembly, and interface orientation with other equipment and components that affect personnel for installation, operations, and maintenance are also included in the human factors and ergonomics considerations.

Reviews of controls and displays ensure that compatibility with human psychology and physical characteristics is achieved and enable the required human tasks to be performed reliably and efficiently. Workstations and tasking, assessment of the physical components (e.g., dimensions, color coding, labeling, etc.) of the workplace, and development of training for operators are evaluated for human factors considerations. This provision eliminates or reduces the potential for human error and improves efficiency of associated operations and maintenance.

Appropriate instruments and displays in the control rooms are particularly important to allow operators to detect and correct abnormal conditions. Alarm display systems, control screen layouts, and workspace design (including access, clearances, serviceability, and habitability) are also important to ensure that routine and special maintenance are completed safely. Valves, controllers, instruments, and switches ease of functionality and access are equally important to allow unhindered and safe operator physical control and observation.

These human factors considerations support the basis for interactions and integration with other design aspects, including engineering, training, operating instructions and procedures, maintenance, and safety management. They ensure that the training of operations personnel and other staff is compatible with the facility operating regime, and that operating procedures are compatible with the design of the tasks and equipment. Task analysis activities performed by the SWPF Training organization ensure that tools, equipment, and procedures are suitable for human use and reflect opportunity for the operators to perform their jobs and the associated elements error-free.

PL-OP-8500, *SWPF Human Factors Review Plan*[2] establishes the process that will be applied to ensure incorporation of Human Factors into the operational aspects of facility design. The plan defines the required actions to implement the applicable portions of U.S. Nuclear Regulatory Commission Regulation (NUREG)-0700, *Human-System Interface Design Review Guidelines*[3], and other appropriate human factors requirements. The plan focuses on non-computerized Human Factor reviews, including the following:

- Operating procedures, including normal, abnormal, emergency, and alarm response;
- Communication systems;

- Layout and arrangement of equipment throughout the facility;
- Task and procedures reviews; and
- Allocation of workload.

PL-EN-5007, *SWPF BPCS HMI Human Factors Engineering Review Plan*[4] describes the application process of human factors engineering in the specification, design, implementation, review, and maintenance of the SWPF Basic Process Control System (BPCS) HMI graphic display layouts, arrangements, and the audible and visual alarms.

## 13.4 Identification of Human-Machine Interfaces

A review was performed of the SS SSCs identified in Chapter 4 of this Documented Safety Analysis (DSA). Many of the SS SSCs are passive design features. One of the SS SSCs is manually controlled by personnel in the field (i.e., the 13.8 kilovolt Manual Disconnect Switches). Thus, the passive design features and manual equipment lack any electronic user interface that is required to function.

A second subset of the SS SSCs are interlocks that stop process pumps or sample pumps. Bypass and testing of interlocks for surveillances and maintenance is done via the Maintenance Interface, which connects to the Safety Instrumented System (SIS) in the Server Room. Indications that individual inputs into the SIS have been bypassed are displayed on ANN 001 in the Control Room. ANN 001 is also used to display the SS alarms for various process parameters that are processed via the SIS.

The remainder SS SSCs identified in Chapter 4 of this DSA are automated active engineered controls. The equipment or system may be energized, de-energized, or settings changed via an electronic user interface, but the functioning of the equipment or system is automatically controlled by preset or programmed logic. For example, the preset field values of rotameters automatically regulate airflow; the SIS automatically performs the programmed functions for safety interlocks; and the BPCS monitors and automatically controls plant air and ventilation systems. Thus, there is no human interface required to perform the safety function once the equipment or system is operational.

All the SS functions occur under emergency conditions without reliance on operator action to actively control the systems. Therefore, there are no HMIs that affect SS SSCs.

This page intentionally left blank.

## 13.5 Optimization of Human-Machine Interfaces

Systematic reviews of HMIs will be conducted during the Cold Commissioning period of the facility. The review by the Operations group will focus on non-computerized Human Factor reviews, including the following:

- Operating procedures, including normal, abnormal, emergency, and alarm response;
- Communication systems;
- Layout and arrangement of equipment throughout the facility;
- Task and procedures reviews, and
- Allocation of workload.

A separate review by the Engineering group will review human factors engineering in the specification, design, implementation, review, and maintenance of the SWPF Safety SIS, BPCS HMI graphic display layouts, arrangements, and the audible and visual alarms.

This page intentionally left blank.

## 13.6 References

[1] S-RCP-J-00001, *SWPF Standards/Requirements Identification Document*. Parsons, Aiken, South Carolina.

[2] PL-OP-8500, *SWPF Human Factors Review Plan*. Parsons, Aiken, South Carolina.

[3] NUREG-0700, *Human-System Interface Design Review Guidelines*, Revision 2. U.S. Nuclear Regulatory Commission, Washington, D.C. March 2002.

[4] PL-EN-5007, *SWPF BPCS HMI Human Factors Engineering Review Plan*. *Parsons, Aiken, South Carolina.*

This page intentionally left blank.

# SWPF DOCUMENTED SAFETY ANALYSIS

# CHAPTER 14.0
# QUALITY ASSURANCE

This page intentionally left blank.

# TABLE OF CONTENTS

**14.0 QUALITY ASSURANCE ..... 14.1-1**

**14.1 Introduction ..... 14.1-1**
**14.2 Requirements ..... 14.2-1**
**14.3 Quality Assurance Program and Organization ..... 14.3-1**
**14.3.1 SWPF Project Manager ..... 14.3-2**
**14.3.2 Quality Assurance Manager ..... 14.3-2**
**14.3.3 QA Organization ..... 14.3-2**
**14.4 Quality Improvement ..... 14.4-1**
**14.5 Documents and Records ..... 14.5-1**
**14.6 Quality Assurance Performance ..... 14.6-1**
**14.6.1 Work Processes ..... 14.6-1**
**14.6.2 Design ..... 14.6-1**
**14.6.3 Procurement ..... 14.6-1**
**14.6.4 Inspection and Testing for Acceptance ..... 14.6-1**
**14.6.5 Independent Assessment ..... 14.6-2**
**14.7 References ..... 14.7-1**

# LIST OF ACRONYMS AND ABBREVIATIONS

| | |
|---|---|
| ANSI | American National Standards Institute |
| ASME | American Society of Mechanical Engineers |
| ASQ | American Society for Quality |
| CFR | Code of Federal Regulation |
| DOE | U.S. Department of Energy |
| DP | Department Procedure |
| IDR | Interdiscipline Review |
| ISMS | Integrated Safety Management System |
| ISO | International Organization for Standardization |
| PO | Purchase Order |
| PP | Project Procedure |
| QA | Quality Assurance |
| QAP | Quality Assurance Plan |
| QC | Quality Control |
| QMS | Quality Management System |
| SS | Safety Significant |
| SSCs | Structure, Systems, and Components |
| SWPF | Salt Waste Processing Facility |

# 14.0 QUALITY ASSURANCE

## 14.1 Introduction

This chapter describes the Quality Assurance (QA) program for the Salt Waste Processing Facility (SWPF) as related to facility safety, including these aspects:

- QA Program and QA organization,
- Document control and records management, and
- QA process ensuring that performed safety-related work meets requirements.

This page intentionally left blank.

## 14.2 Requirements

S-RCP-J-00001, *SWPF Standards/Requirements Identification Document*[1], lists the codes, standards, and regulations governing the policies and program elements of V-QP-J-00001, *SWPF Quality Assurance Plan*[2] (QAP).

This page intentionally left blank.

## 14.3 Quality Assurance Program and Organization

The QAP (V-QP-J-00001[2]) addresses the following elements and requirements from Subpart A of 10 Code of Federal Regulations (CFR), Part 830, *Nuclear Safety Management*[3]; U.S. Department of Energy (DOE) O 414.1C, *Quality Assurance*[4], as applicable to the design code of record and DOE O 414.1D, Chg. 1, *Quality Assurance*[5] for operations; American Society of Mechanical Engineers (ASME) NQA-1-2004, *Quality Assurance Requirements for Nuclear Facility Applications*[6], as applicable to the design code of record and ASME NQA-1-2008/09a, *Quality Assurance Requirements for Nuclear Facility Applications*[7] for operations; and American National Standards Institute/International Organization for Standardization/American Society for Quality (ANSI/ISO/ASQ) Q9001-2000, *Quality Management Systems – Requirements*[8]:

- Quality Policy;
- QA Program Requirements for the SWPF;
- Organization;
- QA Program;
- Design Control;
- Procurement Document Control;
- Instructions, Procedures, and Drawings;
- Document Control;
- Control of Purchased Items and Services;
- Identification and Control of Items;
- Control of Special Processes;
- Inspection;
- Test Control;
- Control of Measuring and Test Equipment;
- Handling, Storage, and Shipping;
- Inspection, Test, and Operating Status;
- Control of Nonconforming Items;
- Corrective Action;
- QA Records;
- Audits;
- Computer Software Management;
- Government Property;
- Continual Improvement; and

- Suspect/Counterfeit Items.

The QAP (V-QP-J-00001[2]) is implemented through SWPF Project Procedures (PPs). It supports implementation of DOE P 450.4A, *Integrated Safety Management System Policy*[9], by addressing SWPF Project Integrated Safety Management System (ISMS) requirements for the development of hazard controls, process and product quality, and safe performance of work within controls established by approved procedures and work instructions. As part of the Quality Management System (QMS), the QAP (V-QP-J-00001[2]) provides tools for ensuring that ISMS objectives are achieved. This ensures that workers, the environment, and the public are reasonably protected from harm.

The QMS organizational responsibilities described in V-IM-J-00001, *SWPF Organization, Roles, and Responsibilities Manual*[10] are discussed below.

### 14.3.1 SWPF Project Manager

The SWPF Project Manager is responsible for controlling processes affecting safety, quality, schedule, cost, and environmental compliance. This includes implementation of the QMS and QAP (V-QP-J-00001[2]) as applicable to the ISMS.

### 14.3.2 Quality Assurance Manager

The QA Manager, appointed by the SWPF Project Manager as the QMS Management Representative, reports to the Parsons Vice President of Quality Assurance and to the SWPF Project Manager. The QA Manager is responsible for developing and maintaining V-QP-J-00001[2], assisting in implementation of the QMS, and the review and independent assessment of safety-related processes. This established reporting relationship provides the QA Manager with the organizational freedom and authority to ensure that the QMS is developed and implemented, as well as to stop work and/or control further operations, if significant conditions adverse to quality are identified.

The QA Manager is responsible for coordinating, verifying, and monitoring activities affecting quality to ensure that SWPF Project personnel perform work in compliance with specified requirements. The QA organization is staffed with personnel that are competent and have qualifications commensurate with their assigned responsibilities.

### 14.3.3 QA Organization

The QA Manager directs the Quality Control (QC) Manager and other managers, leads, and/or supervisory personnel assigned to the Quality Department functions. The Quality Department includes a combination of QC Inspectors, Quality Engineers, and subcontract personnel. All Quality Department personnel, including subcontractors, have a reporting relationship to the QA Manager which enables the organization the ability to remain independent from cost and schedule considerations.

QA personnel performing audits or independent assessment activities are not directly responsible for producing the item or completing the activity, but only to verify quality.

This page intentionally left blank.

## 14.4 Quality Improvement

SWPF PP-AS-1203, *Corrective Action Program*[11], and PP-QA-4703, *Nonconforming Items*[11], describe the processes used to identify, document, and correct conditions adverse to quality.

This page intentionally left blank.

## 14.5 Documents and Records

SWPF PP-DC-3001, *Document Control*[11]*;* PP-DC-3002, *Records Management*[11]*;* and PP-DC-3012, *Document/Administrative Procedure Preparation and Review*[11], describe the processes used to control documents and data, make documents available to users, and control record identification, storage, protection, retrieval, retention time, and disposition.

This page intentionally left blank.

## 14.6 Quality Assurance Performance

Structures, systems, and components (SSCs) are procured, constructed, inspected, and tested with measures to ensure the quality of the items commensurate with their importance to safety, utilizing a graded approach per SWPF PP-NS-5501, *Functional Classification Methodology*[11], implemented by SWPF Departmental Procedure (DP)-QA-4706, *QA Assessment of Item and Service Procurement*[11].

### 14.6.1 Work Processes

All processes are controlled and performed by qualified personnel in accordance with applicable codes, standards, specifications, regulations, and any special customer requirements. The process control procedures prescribe or establish the requirements for planning and developing processes, establish process objectives, and provide tools for measuring those objectives to ensure that processes and resulting products meet the requirements.

### 14.6.2 Design

Systematic reviews of design documents and design changes are performed in accordance with Interdiscipline Review (IDR) guidelines in SWPF PP-EN-5006, *Interdiscipline Review*[11]. QA is a required review for all documents in the IDR process, including initial design and subsequent design changes associated with Safety Significant (SS) SSCs. QA internal audits and assessments are scheduled to review the design control process and ensure compliance with established procedural and programmatic requirements.

### 14.6.3 Procurement

Subcontracts or Purchase Orders (POs) are reviewed by the QA Manager or designee for compliance with Project requirements, as applicable for quality-related procurements. All subcontract or PO amendments shall be controlled, reviewed, and issued in the same manner as the original subcontract or PO. Review guidelines are established by SWPF PP-PR-6012, *Preparation and Change Management of Requisitions*[11]. Engineered items classified as SS SSCs, as well as services classified as SS, are procured from suppliers qualified in accordance with DP-QA-4708, *Supplier Evaluation Program*[11], and listed on the SWPF Qualified Suppliers List. Commercial items classified as SS SSCs are procured and Commercial Grade Dedicated in accordance with PP-EN-5023, *Replacement Item Evaluation/Commercial Grade Item Dedication*[11].

### 14.6.4 Inspection and Testing for Acceptance

Inspection and test planning establishes suitable methods for monitoring and measuring the characteristics of the product to ensure that product requirements have been met. The process owner's develop an inspection and test plan document, as necessary to support inspection and test records in accordance with SWPF PP-QC-4802, *Quality Control Inspection*[11].

### 14.6.5 Independent Assessment

The QA Manager ensures that internal and external assessments are scheduled at planned intervals to determine whether the QMS conforms to the requirements of V-QP-J-00001[2] and is effectively implemented and maintained. SWPF PP-QA-4701, *Surveillance Program*[11], and DP-QA-4713, *Quality Assurance Audits*[11], are used for verification or validation of process and activity conformity with management system requirements.

## 14.7 References

[1] S-RCP-J-00001, *SWPF Standards/Requirements Identification Document*. Parsons, Aiken, South Carolina.

[2] V-QP-J-00001, *SWPF Quality Assurance Plan*. Parsons, Aiken, South Carolina.

[3] 10 CFR 830, *Nuclear Safety Management*.

[4] DOE O 414.1C, *Quality Assurance*. U.S. Department of Energy, Washington, D.C.

[5] DOE O 414.1D, Chg. 1, *Quality Assurance*. U.S. Department of Energy. Washington D.C.

[6] ASME NQA-1-2004, *Quality Assurance Requirements for Nuclear Facility Applications*. American Society of Mechanical Engineers, New York, New York.

[7] ASME NQA-1-2008/09a, *Quality Assurance Requirements for Nuclear Facility Applications*. American Society of Mechanical Engineers, New York, New York.

[8] ANSI/ISO/ASQ Q9001-2000, *Quality Management Systems – Requirements*. American National Standards Institute/International Organization for Standardization/American Society for Quality.

[9] DOE P 450.4A, *Integrated Safety Management Policy*. U.S. Department of Energy, Washington, D.C.

[10] V-IM-J-00001, *SWPF Organization, Roles, and Responsibilities Manual*. Parsons, Aiken, South Carolina.

[11] *Salt Waste Project Facility Project Procedures Manual*. Parsons, Aiken, South Carolina.

This page intentionally left blank.

# SWPF DOCUMENTED SAFETY ANALYSIS

# CHAPTER 15.0
# EMERGENCY PREPAREDNESS PROGRAM

This page intentionally left blank.

# TABLE OF CONTENTS

**15.0 EMERGENCY PREPAREDNESS PROGRAM ..... 15.1-1**

**15.1 Introduction ..... 15.1-1**
**15.2 Requirements ..... 15.2-1**
**15.3 Scope of Emergency Preparedness ..... 15.3-1**
**15.4 Emergency Preparedness Planning ..... 15.4-1**
**15.4.1 Emergency Response Organization ..... 15.4-1**
**15.4.2 Assessment Actions ..... 15.4-1**
**15.4.3 Notification ..... 15.4-1**
**15.4.4 Emergency Facilities and Equipment ..... 15.4-1**
**15.4.5 Protective Actions ..... 15.4-2**
**15.4.6 Training and Exercises ..... 15.4-3**
**15.4.6.1 SWPF Specific Training ..... 15.4-3**
**15.4.6.2 Drills and Exercises ..... 15.4-3**
**15.4.7 Recovery and Reentry ..... 15.4-3**
**15.4.7.1 Reentry ..... 15.4-4**
**15.4.7.2 Recovery ..... 15.4-4**
**15.5 References ..... 15.5-1**

# LIST OF ACRONYMS AND ABBREVIATIONS

| | |
|---|---|
| DOE | U.S. Department of Energy |
| DOE-SR | U.S. Department of Energy-Savannah River |
| S/RID | Standards/Requirements Identification Document |
| SRS | Savannah River Site |
| SWPF | Salt Waste Processing Facility |

# 15.0 EMERGENCY PREPAREDNESS PROGRAM

## 15.1 Introduction

U.S. Department of Energy (DOE) O 151.1c, *Comprehensive Emergency Management System*[1], requires that each DOE site document its emergency management program in an Emergency Plan. The SRS Emergency Plan is published as SCD-7, *SRS Emergency Plan*[2]. The facility-specific information for Salt Waste Processing Facility (SWPF) is published in Annex K to SCD-7[2]. The Annex specifies the responsibilities and actions of the SWPF Emergency Response Organization in the facility and in augmented positions in the Emergency Operations Center.

This chapter summarizes the emergency preparedness and response functions of the program, including:

- Identification of the scope of the facility Emergency Plan; and
- Description of the facility emergency preparedness philosophy, objectives, organization, and emergency response.

This page intentionally left blank.

## 15.2 Requirements

S-RCP-J-00001, *SWPF Standards/Requirements Identification Document*[3] (S/RID), lists the codes, standards, and regulations governing the policies and program elements of the SWPF Emergency Management Program that fulfills the Emergency Preparedness requirements of this Chapter. Programmatic compliance assessments for the S/RID (S-RCP-J-00001[3]) are performed and documented in S-RCP-J-00002, *SWPF Standards/Requirements Identification Document Compliance Plan*[4].

This page intentionally left blank.

## 15.3 Scope of Emergency Preparedness

The SWPF Emergency Plan is focused on the protection of SWPF personnel and workers at adjacent Savannah River Site (SRS) facilities. The SWPF Annex is incorporated as Annex K in SCD-7[2].

Annex K in SCD-7[2] is applicable to all emergencies that could occur at SWPF that fall within the emergency classification system described in Section 4 of SCD-7[2].

Emergency events that trigger Emergency Action Levels for the SWPF include:

- Fire/Explosion,
- Uncontrolled Radioactive Material Releases, and
- Security Threats.

This page intentionally left blank.

## 15.4 Emergency Preparedness Planning

### 15.4.1 Emergency Response Organization

Annex K of SCD-7[2] identifies the SWPF Emergency Response organization and outlines responsibilities and authority of key individuals. SCD-7[2] discusses interfaces with offsite entities including:

- Federal Agencies,
- State Governments,
- County interfaces,
- Tribal organizations, and
- Private interfaces.

### 15.4.2 Assessment Actions

SWPF follows the process for recognizing the onset of operational emergencies as discussed in Section 4 and Annex K of SCD-7[2]. The onset recognition of an operational emergency may be aided by data collection including wind speed and direction, temperature, atmospheric pressure, area radiation monitoring, exhaust stack monitoring, continuous air monitors and sampling, chemical monitoring, fire monitoring, and others as directed by procedure or appropriate personnel. The collection and use of the available data to determine the facility condition in relation to an Emergency Action Level is directed via SWPF-EPIP-001, *Emergency Classification for the Salt Waste Processing Facility (SWPF)*[5]. The methodology, release rate estimates, source terms and computer models for accident release are discussed in Section 6 of SCD-7[2]. Releases and plumes are evaluated based on estimated source terms and wind dispersions versus bounding values described in Chapter 3 of this Documented Safety Analysis.

### 15.4.3 Notification

SWPF follows the notification process as discussed in Section 5 and Annex K of SCD-7[2]. SWPF personnel in normally occupied portions of the incident area are notified by a Public Address system, Safety Alarm System, facility radios, telephones, and facility sweep teams. SWPF emergency response personnel are notified by the same means or by activation of pagers. The site telephone system and personal contact serve as backup means of facility personnel notification. Section 10 of SCD-7[2] describes dissemination of emergency information to the public.

### 15.4.4 Emergency Facilities and Equipment

SWPF follows the facilities and equipment documentation processes as discussed in Section 11 and Annex K of SCD-7[2]. Annex K of SCD-7[2] also addresses the following facilities and equipment that are used by SWPF personnel in emergency response events:

- Decontamination facilities,
- Medical facilities,
- Primary and Alternate Control Rooms,
- Operation Support Centers,
- Communications equipment,
- Safety Showers,
- Safety alarms,
- Public Address system,
- Rescue team equipment,
- Sanitation and survival equipment,
- Transportation equipment,
- Personnel protective equipment,
- Hazardous material (Gas and Liquid) detection and monitoring equipment,
- Damage containment equipment,
- Firefighting equipment,
- Emergency power equipment, and
- Logistic support equipment.

### 15.4.5 Protective Actions

SWPF follows the protective actions as discussed in Section 7 and Annex K of SCD-7[2]. The Area Emergency Coordinator ensures that protective action decisions are made and implemented in a timely manner including transmitting protective action instructions to all J-Area personnel and notifying the Emergency Duty Officer. Protective actions that may be taken based on the circumstances of the event, as also described in Annex K of SCD-7[2]:

- Remain indoors,
- Sheltering, or
- Evacuation

Annex K of SCD-7[2] further addresses the following:

- Medical Support,
- Decontamination capabilities, and
- Records.

### 15.4.6 Training and Exercises

The SWPF follows the training and exercise programs as discussed in Sections 12 and 13, and Annex K of SCD-7[2]. A summary is provided below.

#### 15.4.6.1 SWPF Specific Training

All permanently assigned shift personnel and personnel that serve as shift relief are required to complete the Area Operations training prior to assignment and annually thereafter. Certain positions must also complete Area Emergency Coordinator training initially and annually thereafter.

#### 15.4.6.2 Drills and Exercises

Drills and exercises are conducted to develop, maintain, and test response capabilities of Emergency Response team members, and validate adequacy of emergency facilities, equipment, procedures, and training. Facility drills are scheduled to accommodate the different work shifts of the facility at that time so that Emergency Response team members participate in at least one drill annually.

These drills are conducted in as realistic a manner as practical, minimizing simulation. Participants use emergency equipment and follow emergency procedures, including use of designated routes, staging areas, etc. as appropriate.

An exercise is a comprehensive performance test of the integrated capability of most aspects in the emergency management program. Periodically, exercises include the participation of federal, state, and county emergency management agencies that represent the population groups described in SCD-7[2] that could be exposed to facility hazards. Conduct of exercises is also specified in SCD-7[2].

Drill or exercise reports are processed for storage and retained in accordance with PP-DC-3002, *Records Management*[5].

For discrepancies noted during drills and exercises, corrective actions are established and assigned to the responsible organization. Realistic dates are established for correction and these are tracked to completion.

### 15.4.7 Recovery and Reentry

The SWPF follows the recovery and reentry processes as discussed in Section 9 and Annex K of SCD-7[2].

The operating contractors and security contractor are responsible for planning and implementing recovery activities at the SRS, following termination of the emergency. The U.S. Department of Energy-Savannah River (DOE-SR) is responsible for ensuring the adequacy and appropriateness

of recovery operations. For the SWPF, EPIP-SWPF-202, *Reentry and Recovery*[5] is the guiding facility procedure.

#### 15.4.7.1 Reentry

Reentry may be performed during an emergency to rescue personnel, secure critical equipment, assess the incident, and perform initial mitigation.

#### 15.4.7.2 Recovery

Recovery includes those actions necessary to restore an incident facility and surrounding environs to pre-emergency or safe condition.

Upon termination of an emergency, the Emergency Response Organization is deactivated and a Recovery Organization is established to implement recovery plans. This is detailed in SCD-7[2].

DOE-SR approval is required before normal operations can be resumed. A final briefing of all recovery organization personnel is held to discuss resumption of normal operations and procedural requirements for reports on recovery operations. All documentation of recovery operations is collected and processed for storage in accordance with PP-DC-3002, *Records Management*[5].

## 15.5 References

[1] DOE O 151.1c, *Comprehensive Emergency Management System*. U.S. Department of Energy, Washington, D.C.

[2] SCD-7, *SRS Emergency Plan*, Revision 80. Savannah River Nuclear Solutions, Aiken, South Carolina.

[3] S-RCP-J-00001, *SWPF Standards/Requirements Identification Document*. Parsons, Aiken, South Carolina.

[4] S-RCP-J-00002, *SWPF Standards/Requirements Identification Document Compliance Plan*. Parsons, Aiken, South Carolina.

[5] *Salt Waste Processing Facility Project Procedures Manual*. Parsons, Aiken, South Carolina.

This page intentionally left blank.

# SWPF DOCUMENTED SAFETY ANALYSIS

# CHAPTER 16.0
# DECONTAMINATION AND DECOMISSIONING

This page intentionally left blank.

# TABLE OF CONTENTS

**16.0 DECONTAMINATION AND DECOMMISSIONING ..... 16.1-1**

**16.1 Introduction ..... 16.1-1**
**16.2 Requirements ..... 16.2-1**
**16.3 Conceptual Plan for Decontamination and Decommissioning ..... 16.3-1**
**16.4 Related Documents ..... 16.4-1**
**16.5 References ..... 16.5-1**

# LIST OF ACRONYMS AND ABBREVIATIONS

| | |
|---|---|
| CFR | Code of Federal Regulations |
| D&D | Decontamination and Decommissioning |
| DOE | U.S. Department of Energy |
| HVAC | Heating, Ventilating, and Air Conditioning |
| SWPF | Salt Waste Processing Facility |

# 16.0 DECONTAMINATION AND DECOMMISSIONING

## 16.1 Introduction

This chapter describes provisions that facilitate future decontamination and decommissioning (D&D) of the Salt Waste Processing Facility (SWPF). This chapter includes descriptions of:

- Design features incorporated into the SWPF to facilitate future D&D, and
- Operational considerations to facilitate future D&D.

This page intentionally left blank.

## 16.2 Requirements

Federal regulations, U.S. Department of Energy (DOE) directives and standards, and SWPF documents governing the SWPF design, plans, and programs for D&D at the end of the SWPF life cycle are as follows:

- 10 Code of Federal Regulations (CFR) 830, *Nuclear Safety Management*[1];
- DOE O 420.1B, *Facility Safety*[2];
- DOE G 430.1-3, *Deactivation Implementation Guide*[3];
- DOE G 430.1-4, *Decommissioning Implementation Guide*[4]; and
- S-RCP-J-00001, *SWPF Standards/Requirements Identification Document*[5].

These requirements will be revisited against pertinent regulations at the time of D&D as required.

This page intentionally left blank.

## 16.3 Conceptual Plan for Decontamination and Decommissioning

The SWPF design incorporates a planned approach to D&D. It balances design and operational safety and cost against safety and cost during D&D. D&D provisions include or anticipate:

- Identification of initial conditions for the start of D&D;
- Identification of design features and operating practices that minimize the generation and spread of contamination and, therefore, the need for decontamination during Operations and D&D;
- Identification of design features and operating practices that facilitate D&D;
- Decommissioning methods and alternatives;
- Standards for levels or concentrations of residual radiation, contamination, and other hazardous materials;
- Decontamination methods (e.g., chemical or mechanical);
- Site criteria;
- Design criteria;
- Architectural and structural design criteria;
- Mechanical, electrical, and heating, ventilating, and air conditioning (HVAC) design criteria;
- Fire protection and utilities design criteria required for D&D activities;
- Waste generation and disposal, including onsite storage contingencies;
- Control of decontamination activities;

Examples of SWPF design features intended to support D&D include:

- Installation of impermeable coatings on floors, walls, and ceilings (stainless steel liners or polymeric coatings) in key areas;
- Curbs, dikes, or other barriers to contain maximum spill volumes;
- Minimum floor slopes;
- Leak collection sumps with sealed surfaces and sump pumps;
- Sealed penetrations;
- Access hatches to the dark cells on the Operating Deck and East Caustic-Side Solvent Extraction Tank Cell;
- Airlock door to the West Caustic-side Solvent Extraction Tank Cell;
- HVAC system with zoned, cascaded, and filtered flow paths;
- Minimized HVAC duct lengths and embedded ducts;

- Welded construction of exhaust duct with exception of minimal lengths of flanged Halar-lined lab/hot cell exhaust duct;
- Flush, vent, and drain connections on vessels, piping, and components;
- Flush spray headers in process cells, vessels, and sumps;
- Ability to flush process systems and components with water, caustic, or acid solutions;
- Segregated drain and sump systems;
- Overflow lines directed to sumps;
- Welded construction of process vessels and piping to minimize crud traps caused by threaded connections;
- Filtered vent systems for process vessels; and
- Minimized pipe wall penetrations; when applicable, penetrations filled with a flexible grout to facilitate pipe removal.

The SWPF is operated under procedures and practices that minimize the release of contaminations from the primary and secondary confinement systems, quickly isolate sources of contamination, and require expeditious cleanup of contamination. These operating procedures and practices, along with the design features, minimize the scope and duration of D&D activities at the end of the facility life cycle.

## 16.4 Related Documents

1. TM 5-801-10: *General Design Criteria to Facilitate the Decommissioning of Nuclear Facilities*. Departments of the Army (Corps of Engineers), Washington, D.C. April 3, 1992.
2. DOE O 430.1B, Chg 2: *Life Cycle Asset Management*. U.S. Department of Energy, Washington, D.C.
3. DOE-STD-1120-2005: *Integration of Environment, Safety, and Health into Facility Disposition Activities*. U. S. Department of Energy, Washington, D.C.
4. DOE/EM-0318: *Facility Deactivation Methods and Practices Handbook*, Revision 1. U.S. Department of Energy, Washington, D.C.
5. NUREG-1575: *Multi-Agency Radiation Survey and Site Investigation Manual (MARSSIM)*, Revision 1. U.S. Nuclear Regulatory Commission, Washington, D.C.
6. WSRC-RP-2003-00233: *Savannah River Site Environmental Management Integrated Deactivation and Decommissioning Plan*. Westinghouse Savannah River Company, Aiken, South Carolina. May 2003.
7. WSRC G-ESR-G-00049: *Graded Approach to Decommissioning Requirements*. Westinghouse Savannah River Company, Aiken, South Carolina.

This page intentionally left blank.

## 16.5 References

[1] 10 CFR 830, *Nuclear Safety Management*.

[2] DOE O 420.1B, *Facility Safety*. U.S. Department of Energy, Washington, D.C.

[3] DOE G 430.1-3, *Deactivation Implementation Guide*. U.S. Department of Energy, Washington, D.C.

[4] DOE G 430.1-4, *Decommissioning Implementation Guide*. U.S. Department of Energy, Washington, D.C.

[5] S-RCP-J-00001, *SWPF Standards/Requirements Identification Document*. Parsons, Aiken, South Carolina.

This page intentionally left blank.

# SWPF DOCUMENTED SAFETY ANALYSIS

# CHAPTER 17.0
# MANAGEMENT ORGANIZATION
# AND
# INSTITUTIONAL SAFETY PROVISIONS

This page intentionally left blank.

# TABLE OF CONTENTS

**17.0 MANAGEMENT ORGANIZATION AND INSTITUTIONAL SAFETY PROVISIONS ..... 17.1-1**

**17.1 Introduction ..... 17.1-1**
**17.2 Requirements ..... 17.2-1**
**17.3 Organizational Structure, Responsibilities, and Interfaces ..... 17.3-1**
**17.3.1 Organizational Structure ..... 17.3-1**
**17.3.2 Organizational Responsibilities ..... 17.3-1**
**17.3.3 Staffing and Qualifications ..... 17.3-2**
**17.4 Safety Management Policies and Programs ..... 17.4-1**
**17.4.1 Safety Review and Performance Assessment ..... 17.4-1**
**17.4.2 Configuration and Document Control ..... 17.4-1**
**17.4.3 Occurrence Reporting ..... 17.4-2**
**17.4.4 Safety Culture ..... 17.4-2**
**17.5 References ..... 17.5-1**

## LIST OF ACRONYMS AND ABBREVIATIONS

| | |
|---|---|
| CM | Configuration Management |
| DOE | U.S. Department of Energy |
| ED&D | Engineering Development and Demonstration |
| EPC | Engineering, Procurement, and Construction |
| ESH | Environmental, Safety, and Health |
| ISMS | Integrated Safety Management System |
| LL | Lessons Learned |
| OE | Operating Experience |
| ORPS | Occurrence Reporting and processing System |
| PITS | Performance Improvement Tracking System |
| QA | Quality Assurance |
| SCWE | Safety Conscious Work Environment |
| S/RID | Standards/Requirements Identification Document |
| SWPF | Salt Waste Processing Facility |

# 17.0 MANAGEMENT ORGANIZATION AND INSTITUTIONAL SAFETY PROVISIONS

## 17.1 Introduction

This chapter presents information on management, technical, and other organizations that support the safe operation of the Salt Waste Processing Facility (SWPF). The requirements used to develop safety management programs are enumerated and include responsibilities of (and relationships between) the various organizations, as well as sufficient information on the safety management policies and programs to demonstrate that the facility operations are embedded in a safety-conscious environment.

This chapter includes descriptions of:

- The overall structure of the organizations and personnel having responsibilities for facility safety, as well as interfaces among those organizations; and
- The programs and policies that promote safety and efficiency including Integrated Safety Management, safety culture, performance assessment, configuration and document control, occurrence reporting, and staffing and qualification.

This page intentionally left blank.

## 17.2 Requirements

S-RCP-J-00001, *SWPF Standards/Requirements Identification Document*[1] (S/RID), states the codes, standards, and regulations governing the management, organization, and institutional safety provisions for SWPF. Programmatic compliance assessments for the S/RID (S-RCP-J-00001[1]) are performed per S-RCP-J-00002, *SWPF Standards/Requirements Identification Document Compliance Plan*[2].

This page intentionally left blank.

## 17.3 Organizational Structure, Responsibilities, and Interfaces

This Subchapter summarizes the overall Project organizational structure. Emphasis is placed on presenting the distinct entities that are organized into a safety-conscious and responsive organization that ensures and enhances SWPF safety.

### 17.3.1 Organizational Structure

The SWPF Project Organization includes Parsons as the SWPF Engineering, Procurement, and Construction (EPC) Contractor, and a direct support team including several contractors. Personnel from these other companies are integrated into the SWPF Project's organization by placing key support personnel in various positions. The EPC Contractor maintains effective Project performance by revising the project's support team make-up as needed by adding to and or reducing the specific providers utilized at SWPF and the extent of their support as appropriate.

### 17.3.2 Organizational Responsibilities

V-IM-J-00001, *SWPF Organization, Roles, and Responsibilities Manual*[3], describes the line and support organizations and their respective responsibilities and functions. V-IM-J-00001[3] provides a detailed listing of the individual responsibilities and functions of the top three organizational levels of management and key personnel. This includes specific functions and responsibilities of the following:

- Plant organization including the operations, maintenance, and training organizations;
- The Engineering organization including the cognizant system engineering, fire protection, and nuclear safety organization;
- Environmental, Safety, and Health (ESH) organization including radiation protection, industrial hygiene and environmental protection;
- Quality Assurance (QA) organization which includes the quality control function; and
- Assurance for independent oversight, compliance assurance, corrective action management, and enforcement coordination.

V-IM-J-00001[3] establishes high-level safety management function, responsibilities and authorities for line management and management in supporting roles. P-EIP-J-00001, *SWPF Integrated Safety Management System Description*[4], provides a roadmap of the plans and procedures for implementing the Project's U.S. Department of Energy (DOE)-approved Integrated Safety Management System (ISMS). The plans and procedures define the responsibilities for implementing the respective safety management programs.

SWPF has several mechanisms for monitoring safety performance. These include the monthly Key Performance Indicators, Quarterly Occurrence Reporting and Processing System (ORPS) Report to DOE, and the Annual ISMS Objectives, Measures, and Commitments.

The Project's interfaces with other site contractors for critical services such as utilities, emergency response, waste management, environmental protection, and security are defined in a comprehensive suite of Interface Control Documents listed in V-ESR-J-00001, *SWPF Interface Control Document List*[5], which is developed reviewed, and approved jointly with DOE and the other pertinent site contractors.

### 17.3.3 Staffing and Qualifications

Staffing levels have developed to support the safe operations of the SWPF.

The Project Personnel Selection and Qualification program is defined in PL-TR-1801, *SWPF Personnel Selection, Training, and Qualification Plan*[6]. This Project Plan flows down the requirements of DOE O 426.2, Chg. 1, *Personnel Selection, Training, Qualification, and Certification Requirements for DOE Nuclear Facilities*[7]. Personnel are selected for nuclear facility positions in accordance with the requirements specified in Table 1 of DOE O 426.2, Chg. 1[7] or meet defined alternatives, as well as any additional requirements imposed by the job performance requirements. Prior to assignment to a job position, the Cognizant Manager/Supervisor verifies personnel satisfy the education and experience requirements of DOE O 426.2, Chg. 1[7] for the position for which they are selected or that they meet the alternatives.

Supervisors are responsible for verifying that a person satisfies the education and experience requirements of DOE O 426.2, Chg. 1[7] for the position for which they are selected prior to assignment to a job position. PL-TR-1801[6] provides an appendix linking SWPF organizational job titles to Table 1 of DOE O 426.2,Chg. 1[7]. For personnel entering a training and qualification program, the ability to meet the minimum education and experience requirements (or approved alternatives) within a reasonable time following completion of training is validated prior to assignment to the training and qualification program to avoid extended periods of inactivity between completion of training and assignment to job duties. Verification is documented by training program Qualification Card (or interim documentation pending development of qualification cards), or in the case of Managers assigned to a position based on education and experience, via a letter to their training file.

## 17.4 Safety Management Policies and Programs

This subchapter identifies and describes programs to enhance SWPF safety.

### 17.4.1 Safety Review and Performance Assessment

Safety reviews and performance assessment are defined at the programmatic level by P-EIP-J-00001[4]. P-EIP-J-00001[4] provides the roadmap of the policies, plans, and procedures that define the methods and responsibilities for implementing the safety management system. The Contractor Assurance Program, defined in P-SD-J-00001, *SWPF Contractor Assurance System Program Description*[8], establishes a robust program for ensuring line management and internal independent oversight of SWPF safety management processes, including appraisal of the performance of organizations responsible for various elements of the safety management program (e.g., fire protection, configuration management, industrial hygiene, industrial safety, and radiation protection). Identification of opportunities for performance improvement and protection of the safety basis derive from plant personnel feedback (workers and management) through execution of PS-06, *Project Manager Policy on Continual Improvement*[9]; PS-04, *SWPF Project Manager Policy on Conduct of Business*[10]*;* and the formal assessment program. PS-04[10] encourages challenging assumptions, investigating anomalies, considering potential consequences, and striving for continual improvement which is also a focus of PS-06[9].

The Project's overall approach to providing both internal and line management assessments of safety management is defined in PL-AS-1001, *SWPF Integrated Assessment Program Plan*[11], and the subsidiary organization-specific self- and internal independent assessment plans. The ongoing assessment process is contributed to by all organizations including Plant, Engineering, QA, ESH, Assurance, and external organizations, including DOE and the Defense Nuclear Facilities Safety Board. Feedback from assessments and from worker and management feedback is processed in accordance with PP-AS-1203, *Corrective Action Program*[12]. This process ensures that issues are reviewed by nuclear safety so that any potential inadequacy of the Documented Safety Analysis is identified and evaluated in accordance with PP-NS-5507, *SWPF Unreviewed Safety Questions*[12].

### 17.4.2 Configuration and Document Control

The SWPF Configuration Management (CM) Program is defined in P-CDM-J-00001, *SWPF Configuration Management Plan*[13]. The policies, plans, and procedures described in P-CDM-J-00001[13] establish the responsibilities and method for controlling modifications to the facility or its operations. P-CDM-J-00001[13] provides a roadmap of the approved processes for controlling documentation that supports the safety basis (e.g., facility drawings, operating procedures, training manuals). The SWPF CM Program objective is to 1) ensure consistency among design requirements, physical configuration, and documentation (including analysis, drawings, and procedures) for the activity; and 2) maintain this consistency throughout the life of the facility or activity, particularly as changes are being made.

### 17.4.3 Occurrence Reporting

The Project documents and analyzes self-identifying incidents and as-found conditions identified through assessment and personnel feedback to determine reportability under DOE O 232.2, Admin Chg 1, *Occurrence Reporting and Processing of Operations Information*[14]. In accordance with PP-CONOPS-07.2, *Occurrence Reporting*[12], self-identifying incidents such as injuries or environmental releases are immediately investigated and reported into the DOE ORPS database, as applicable. Other as-found conditions (e.g., potential inadequacies in the safety analysis or Technical Safety Requirement issues) that are identified through Project feedback mechanisms are reported into the SWPF Project Performance Improvement Tracking System (PITS) and evaluated for ORPS reportability per PP-AS-1203[12].

Issues reported into PITS are assigned a significance category, a priority level, and a responsible manager. For nonconforming conditions and preventive measures, the responsible manager must determine the cause(s), extent of condition, the corrective/preventive actions, and the completion date for each action. The Project has a "zero-threshold" reporting policy. The PITS database therefore comprises both ORPS reported information, as well as low-significance category feedback for improvement. PITS and ORPS data are evaluated for trends for the previous 12 months every quarter. Potentially emerging trends are reported into PITS for tracking and corrective actions.

PITS and ORPS reports are reviewed by the Operating Experience (OE)/Lessons Learned (LL) Coordinator to determine the appropriateness of an internal Project OE/LL or DOE OE/LL. In accordance with PP-OP-8546, *Operating Experience Program*[12], the Project OE/LL Coordinator routinely reviews sources including the DOE OE/LLs for sources of OE/LL that could improve project performance and prevent undesirable outcomes.

### 17.4.4 Safety Culture

The SWPF Safety Culture comprises the values and behaviors established by management and followed by personnel. The policy statements establish the espoused values establishing safe performance of work as the overriding priority to protect the workers, public, and the environment. These policy statements include:

- PS-01, *SWPF Integrated Safety Management System Policy*[15]*;*
- PS-04, *SWPF Project Manager Policy on Conduct of Business*[10];
- PS-06, *Project Manager Policy on Continual Improvemen*[9]*; and*
- PS-10, *SWPF Project Manager Policy on Safety Conscious Work Environment*[16].

P-EIP-J-00001[4] and PS-01[15] establish the five ISMS Core Functions, eight Guiding Principles, and four key Safety Culture attributes as Project policy. The Safety Culture attributes established as Project policy include:

1. Individual Attitude and Responsibility for Safety: All Project personnel must accept responsibility for safe mission performance and demonstrate a questioning attitude by challenging assumptions, investigating anomalies, and considering potential adverse consequences of planned actions. All Project personnel must be mindful of work conditions that may impact safety, and assist each other in preventing unsafe acts or behaviors.

2. Operational Excellence: All Project Organizations must strive for sustained high levels of operational performance through a focus on operations, conservative decision making, deference to expertise, and systematic approaches to eliminate or mitigate error-likely situations.

3. Oversight for Performance Assurance: The Project must use competent, robust, periodic, and independent oversight as an essential source of feedback to verify whether standards and requirements are being met and to bring fresh insights and observations when considering safety and performance improvements.

4. Organizational Learning for Performance Improvement: The Project must strive for excellence in performance monitoring, self assessment, problem analysis, solution planning, and solution implementation. The Project must cultivate an environment of openness, trust, and continuous learning.

Element 4, Organizational Learning for Performance Improvement, is widely understood to be a critical element to a robust nuclear safety culture (*Institute for Nuclear Power Operations Principles for a Strong Nuclear Safety Culture Addendum I: Behaviors and Actions That Support a Strong Nuclear Safety Culture*[17]). Organizational learning is predicated on a strong Safety Conscious Work Environment (SCWE) that emphasizes the right of all personnel to raise issues without fear of retaliation. PS-10[16] states:

> *"The Parsons' team is committed to a SCWE that actively supports designing, constructing, and commissioning SWPF in a safe and compliant manner. A SCWE is an environment in which:*
>
> - *All employees and subcontractors are encouraged to raise concerns without fear of harassment, intimidation, retaliation, or discrimination;*
> - *Employee concerns are evaluated strictly on their merit and employee motive is not a factor;*
> - *The concerns are promptly reviewed, given proper priority, and appropriately evaluated and addressed; and*
> - *Timely feedback is provided to those raising the concerns.*
>
> *It is my responsibility as Project Manager to support and defend every employee's right to raise any issue, and to address the issue in a timely and objective manner. I hold subordinate managers accountable for their handling and resolution of employee issues."*

An effective safety culture that is characterized by organizational leaning fosters an atmosphere where technical inquisitiveness is encouraged and rewarded. PS-04[10] reinforces SCWE and its central importance to promoting technical inquisitiveness:

> *"Technical inquisitiveness requires the personal dedication and accountability of all Project Personnel engaged in work activities to ensure that they understand their respective roles, responsibilities, and the basis for each of their technical actions. The SCWE requires all Project Personnel to employ a questioning attitude and address concerns or lack of understanding without any fear of reprisal. The focus should always be on the issue and never on the motive for raising the concern.*
>
> *Management's most fundamental responsibility is to encourage this questioning attitude and the need to identify every potential issue. Management must further welcome decisions and plans being called into question by involved all Project Personnel. All SWPF Project Personnel should actively encourage:*
>
> - *Challenging assumptions,*
> - *Investigating anomalies,*
> - *Considering potential consequences, and*
> - *Striving for Continual Improvement."*

## 17.5 References

[1] S-RCP-J-00001, *SWPF Standards/Requirements Identification Document*. Parsons, Aiken, South Carolina.

[2] S-RCP-J-00002, *SWPF Standards/Requirements Identification Document Compliance Plan*. Parsons, Aiken, South Carolina.

[3] V-IM-J-00001, *SWPF Organization, Roles, and Responsibilities Manual*. Parsons, Aiken, South Carolina.

[4] P-EIP-J-00001, *Salt Waste Processing Facility Project Integrated Safety Management System Description*. Parsons, Aiken, South Carolina.

[5] V-ESR-J-00001, *SWPF Interface Control Document List*. Parsons, Aiken, South Carolina.

[6] PL-TR-1801, *SWPF Personnel Selection, Training, and Qualification Plan*. Parsons, Aiken, South Carolina.

[7] DOE O 426.2, Chg. 1, *Personnel Selection, Training, Qualification, and Certification Requirements for DOE Nuclear Facilities*. U.S. Department of Energy, Washington, D.C.

[8] P-SD-J-00001, *SWPF Contractor Assurance System Program Description*. Parsons, Aiken, South Carolina.

[9] PS-06, *Project Manager Policy on Continual Improvement*. Parsons, Aiken, South Carolina.

[10] PS-04, *SWPF Project Manager Policy on Conduct of Business*. Parsons, Aiken, South Carolina.

[11] PL-AS-1001, *SWPF Integrated Assessment Program Plan*. Parsons, Aiken, South Carolina.

[12] *Salt Waste Project Facility Project Procedures Manual*. Parsons, Aiken, South Carolina.

[13] P-CDM-J-00001, *SWPF Configuration Management Plan*. Parsons, Aiken, South Carolina.

[14] DOE O 232.2, Admin Chg. 1, *Occurrence Reporting and Processing of Operations Information*, U.S. Department of Energy, Washington, D.C.

[15] PS-01, *SWPF Integrated Safety Management System Policy*. Parsons, Aiken, South Carolina.

[16] PS-10, *SWPF Project Manager Policy on Safety Conscious Work Environment*. Parsons, Aiken, South Carolina.

[17] *Principles for a Strong Nuclear Safety Culture Addendum I: Behaviors and Actions That Support a Strong Nuclear Safety Culture*, Institute for Nuclear Power Operations, Atlanta, Georgia. 2009.

This page intentionally left blank.