SALT WASTE PROCESSING FACILITY

Student Handout

SWPF OVERVIEW COURSE

SWPGGS01HO

Revision 1

FOR TRAINING USE ONLY

The material contained in this module is FOR TRAINING USE ONLY. In no way should it be interpreted that the material contained herein may be substituted for procedures. Where copies of procedures are given, they are intended for clarification and information only, and the latest revision of the material in question should be obtained for actual use. If there are any questions, contact your supervisor.

PARSONS

Trainee End-of-Course Critique

Course Title:	Course No.:
Instructor:	**Date:**

	Poor		Average		Excellent
1. Objectives Were the objectives clear and were they reinforced during the training session?	1	2	3	4	5
2. Content Were the course materials well organized and relevant to the subject?	1	2	3	4	5
3. Instructor Was the instructor knowledgeable and responsive to your training needs?	1	2	3	4	5
4. Delivery Was the instructor's delivery lively? Was the instructor easy to understand and was the presentation fluid?	1	2	3	4	5
5. Presentation media Were presentation media, when used, helpful and well designed?	1	2	3	4	5
6. Handouts Were the handouts helpful and well-designed?	1	2	3	4	5
7. Application "Will this information be useful on the job?	1	2	3	4	5
8. Participant Did you come to class on time? Were you prepared? Were you attentive? Did you participate?	1	2	3	4	5
9. Time Usage Was the time allocated for the course and the pace of the presentation suitable?	1	2	3	4	5
10. Overall Rating	1	2	3	4	5

Other comments (e.g., training weaknesses/strengths, suitability of course length, adequacy of facility):

Name (Optional):	Department (Optional):

Forward completed form to the instructor or SWPF Training Manager

Salt Waste Processing Facility
Module 1

Introduction to the Salt Waste Processing Facility (SWPF) and Facility Layout

SWPGGS01.TP0101

INTRODUCTION TO SWPF OVERVIEW OBJECTIVES

Upon completion of this module the student should be able to:

1. State the mission of the SWPF
2. State the purpose of the SWPF
3. State the three SWPF Processes
4. Describe the plant layout

SWPF Mission

Safely and efficiently segregate radioactive salt waste from F and H-Area Tank Farms into products suitable for processing at the Defense Waste Processing Facility and Saltstone Processing Facility

SWPF PROCESS OVERVIEW

- Site Treatment Plan (STP) 2006 states Defense Waste Processing Facility (DWPF) will maintain canister production sufficient to meet the commitment for the removal of the current waste inventory by 2028
  - DWPF operating since 1996
  - SWPF is needed for DWPF and Saltstone Processing Facility (SPF) to effectively meet STP requirements
    - Will replace Actinide Removal Process (ARP) and
    - Modular Caustic-side Extraction Unit (MCU)

SWPGGS01.TP0101

4 of 274

Site Treatment Plan is found in document WSRC-TR-94-0608, Savannah River Site Approved Site Treatment Plan, 2006 Annual Update

- To make the Site Treatment Plan economically feasible, it is necessary to limit the volume of glass produced (Vitrification)
  - SWPF provides the needed concentration and increased throughput to make the HLW program economically feasible
    - -High volume of low curie Decontaminated Salt Solution to Saltstone Production Facility
    - -Low Volume of High curie Cs, Sr and actinide sludge for vitrification at Defense Waste Processing Facility.
- Currently vitrified waste canisters are stored on-site.

Ultimately, vitrified waste canisters produced at the DWPF will be sent to a deep geological repository.

SALT WASTE LEGACY

- Nuclear material production created > 150 Mgal of liquid radioactive waste from 1954 –present.
  - H-Canyon Fuel Dissolution
- On-going SRS volume reduction activities have reduced this total to approximately 37 Mgal, these activities include:
  - F/H Area Tank Farm Evaporator Operation
  - Actinide Removal Process (ARP) and Modular Caustic-side Extraction Unit (MCU)

SWPGGS01.TP0101

5 of 274

- Continued long-term storage poses an environmental risk should these tanks leak.
- Currently the ARP and MCU Salt Waste processing throughput is around 4 – 6 gpm
  - SWPF projected output will be almost 4 times greater at 21.56 gpm to meet
- Current SWPF limiting factors will be the interface with DWPF and SPF. (They shut down, we shut down)

Lag storage is being looked at for both facilities.

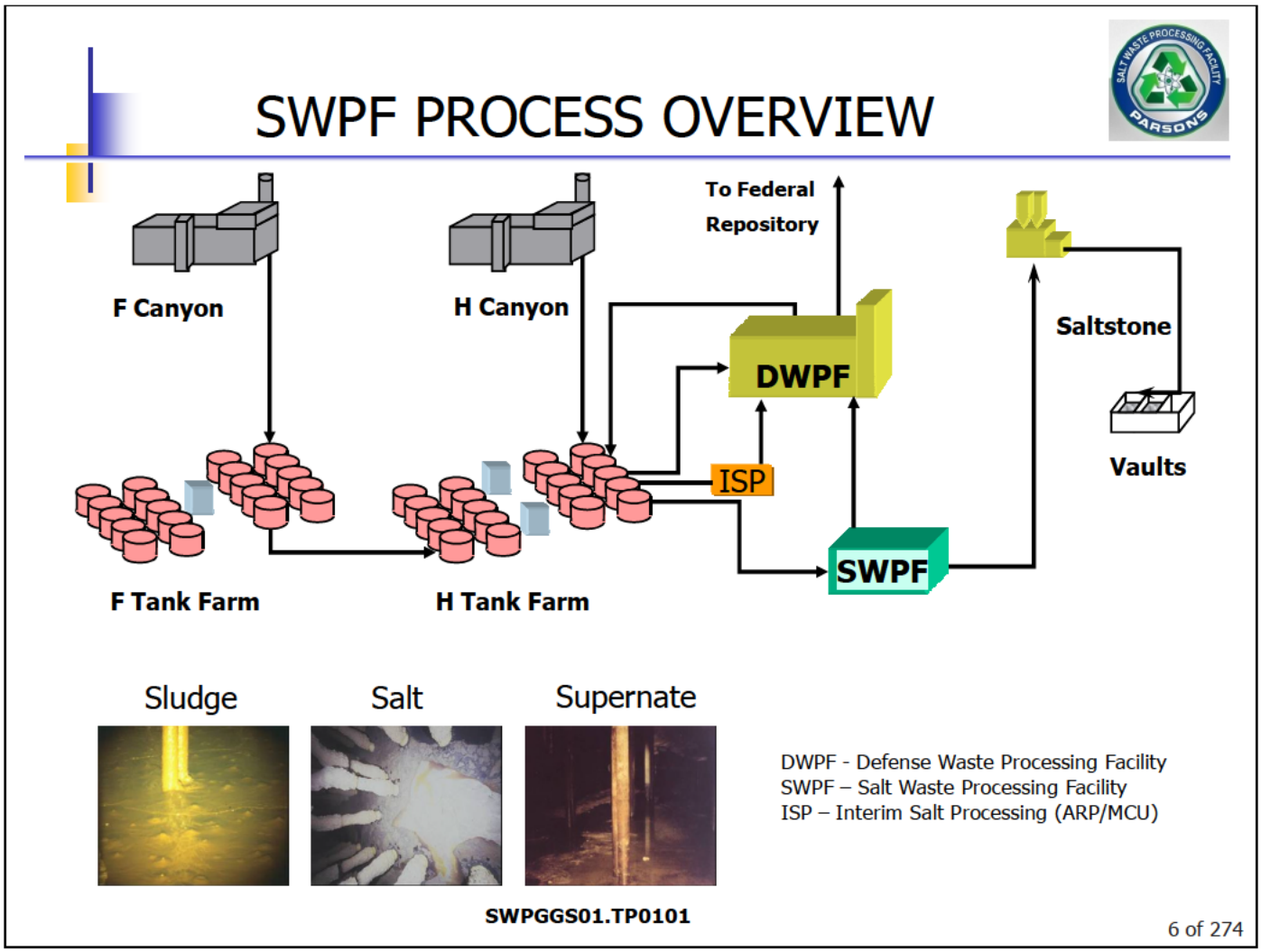

SWPF Alpha Strike Process will replace the Actinide Removal Process (ARP)

SWPF Caustic Side Solvent Extraction Process will replace the Modular Contactor Unit (MCU)

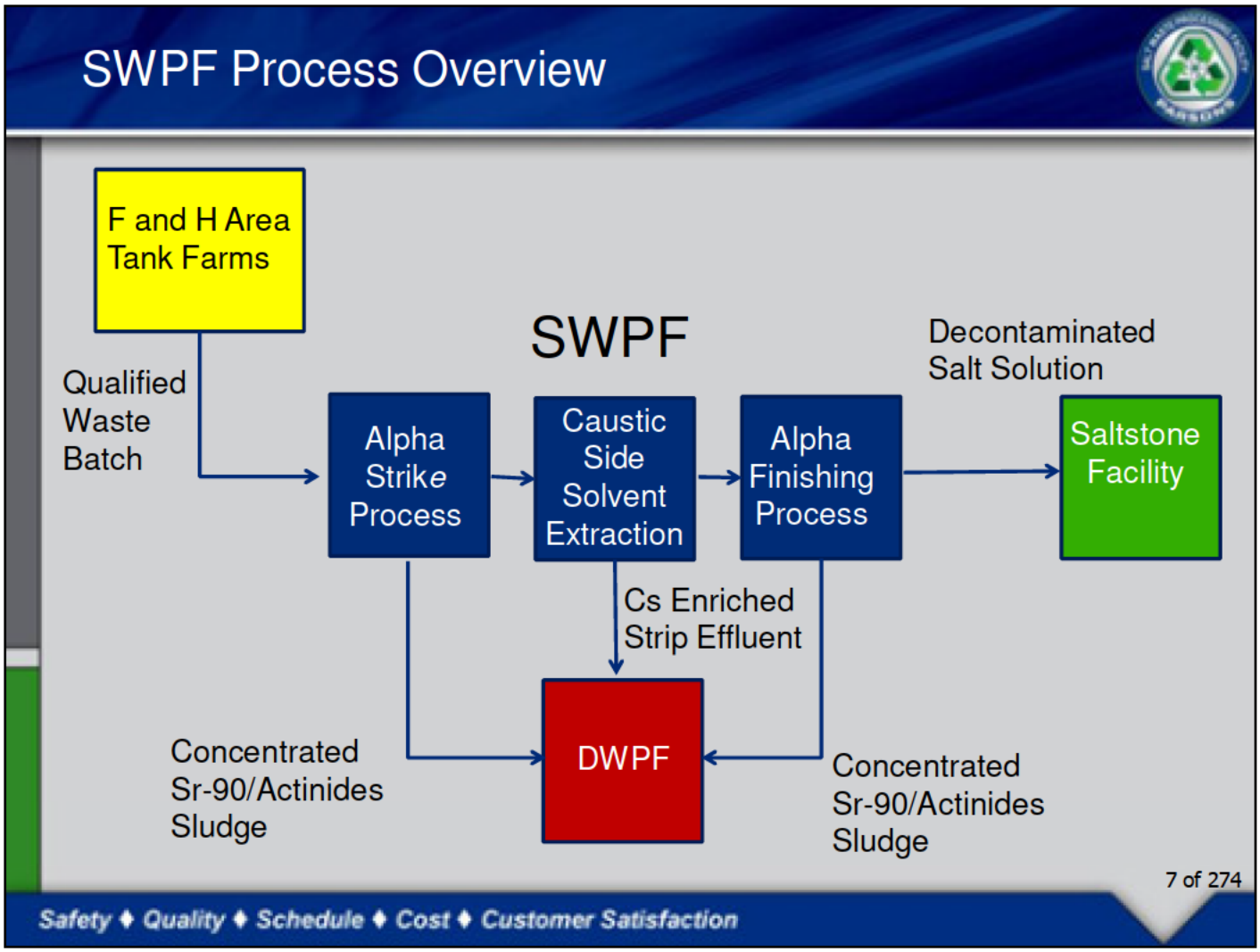

The three SWPF Processes:

Alpha Strike Process

Caustic Side Solvent Extraction Process

Alpha Finishing Process

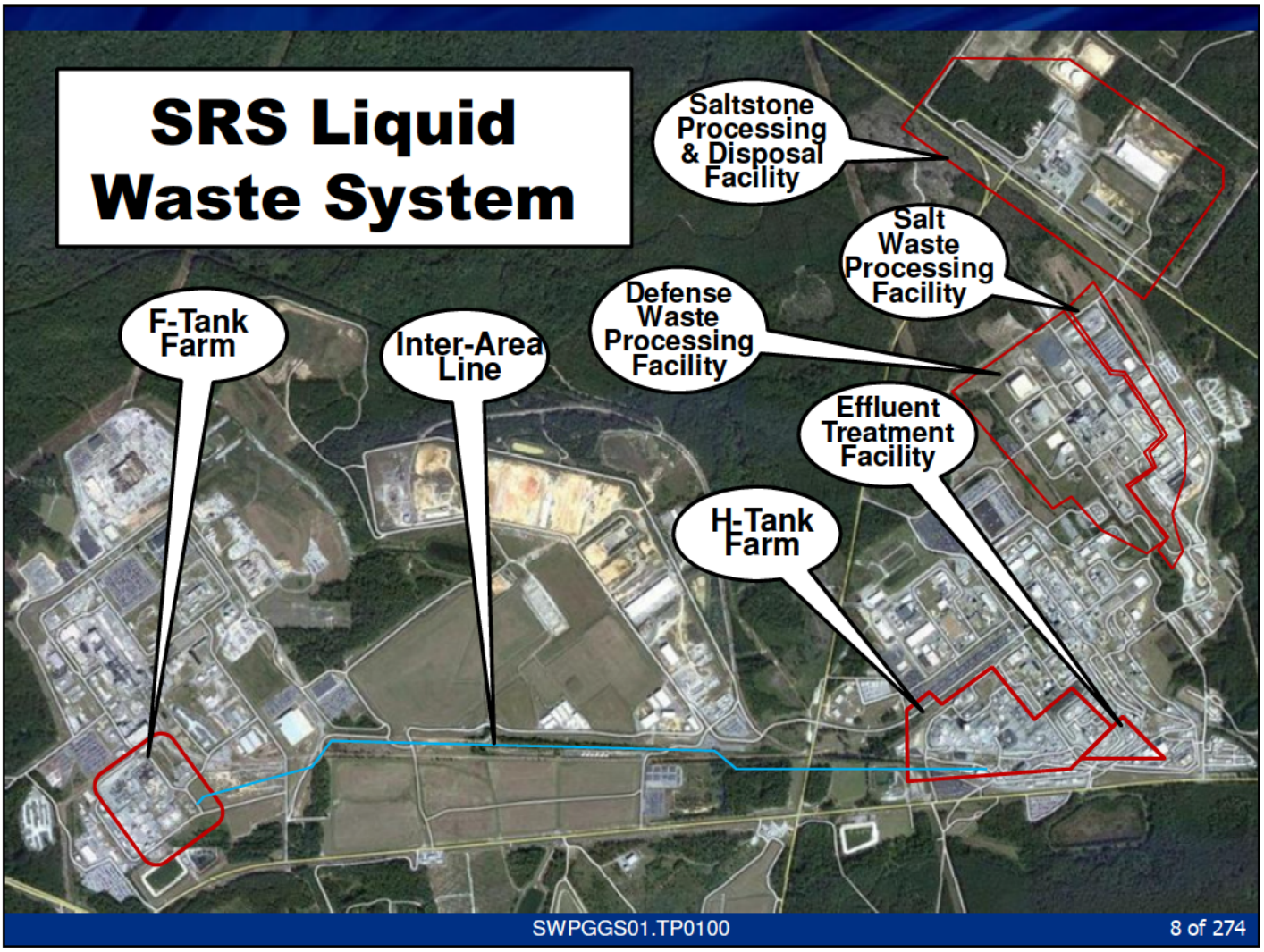
SRS Liquid Waste System
Saltstone Processing & Disposal Facility
Salt Waste Processing Facility
Defense Waste Processing Facility
F-Tank Farm
Inter-Area Line
Effluent Treatment Facility
H-Tank Farm
SWPGGS01.TP0100
8 of 274

SWPF PROCESS OVERVIEW

- Waste stored in F-Area and H-Area underground storage tanks:
  - 3 Mgal of sludge
  - 37 Mgal salt waste
    - 20 Mgal of salt solution (supernate)
    - 17 Mgal of crystallized salts (solid saltcake)
- Water added increases total volume to approximately 97 Mgal
- Waste has a total radioactive level of about 350 million curies

SWPGGS01.TP0101

9 of 274

- All volume numbers are approximates
- Sludge contains precipitated solids and insoluble waste
- Water will be used to wash down sludge tanks and to break down crystallized salts

PROCESS BUILDING LAYOUT

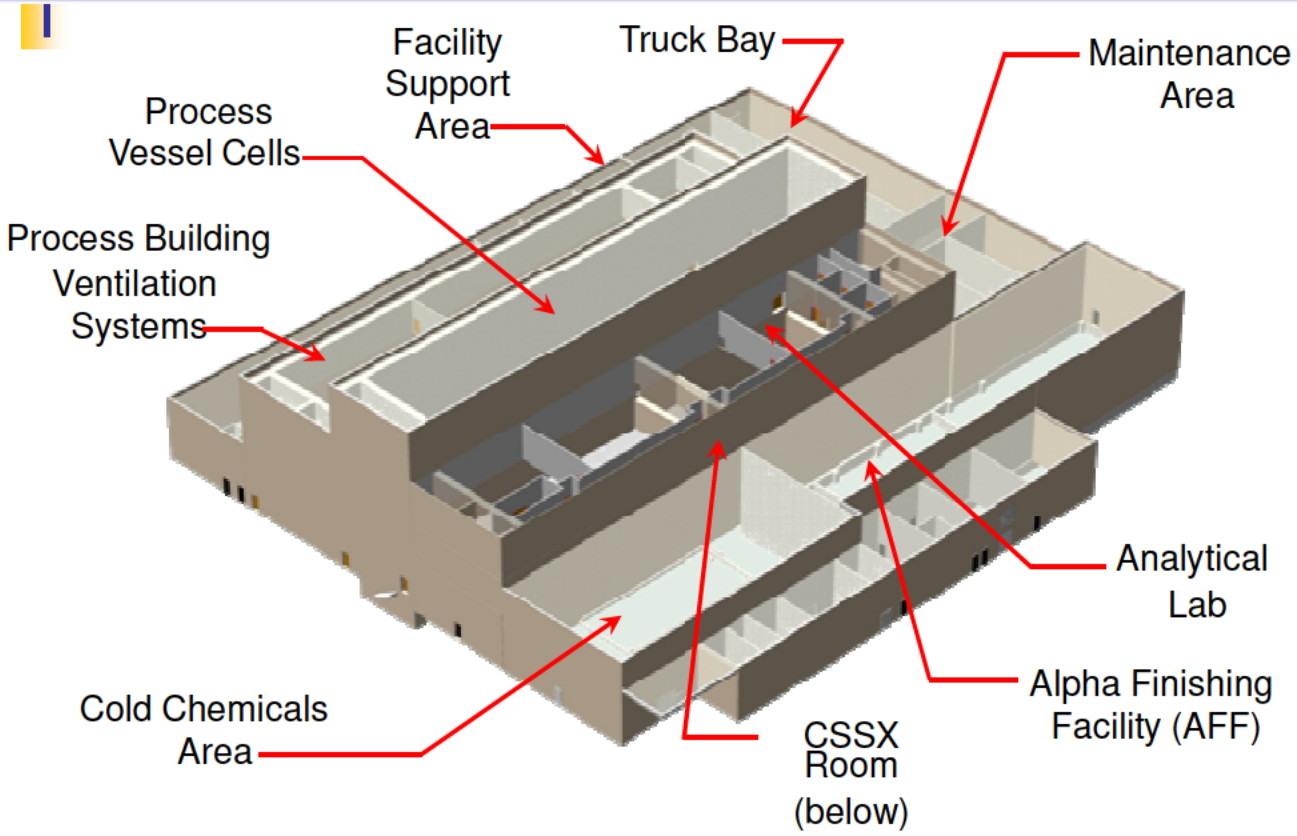

SWPGGS01.TP0101

PROCESS BUILDING LAYOUT

100′ Elevation

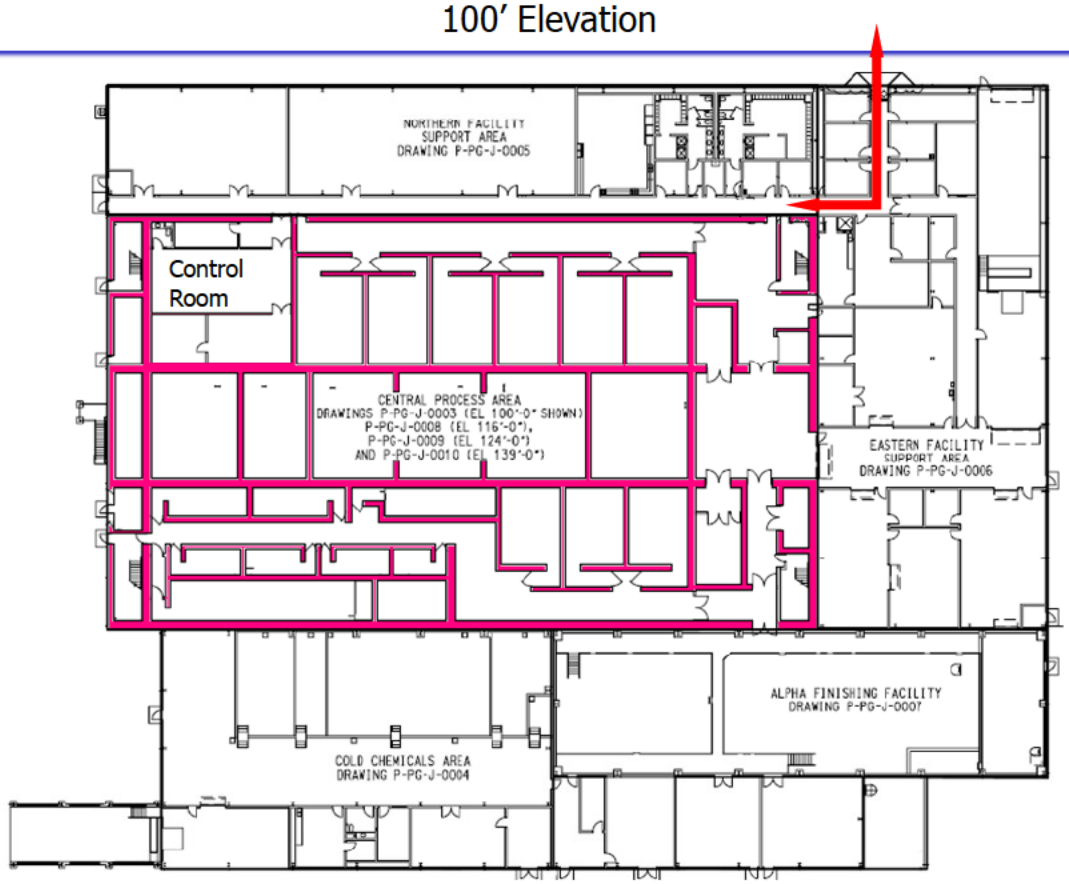

SWPGGS01.TP0101

11 of 274

The Process Building is functionally divided into four areas:

- 1st is the Central Process Area (CPA)
- 2nd Alpha Finishing Facility
- 3rd Cold Chemical Area
- 4th Facility Support Area.

We will start by reviewing the CPA.

The basemat, floors, walls and ceilings of the entire CPA is constructed of reinforced concrete.

Why?

To withstand any natural phenomena hazards, shield workers and the environment from direct radiation exposure and minimize the release of HAZMAT to the environment if the primary confinement fails.

Central Process Area
PROCESS TANK CELLS
100' Elevation (Ground Level)

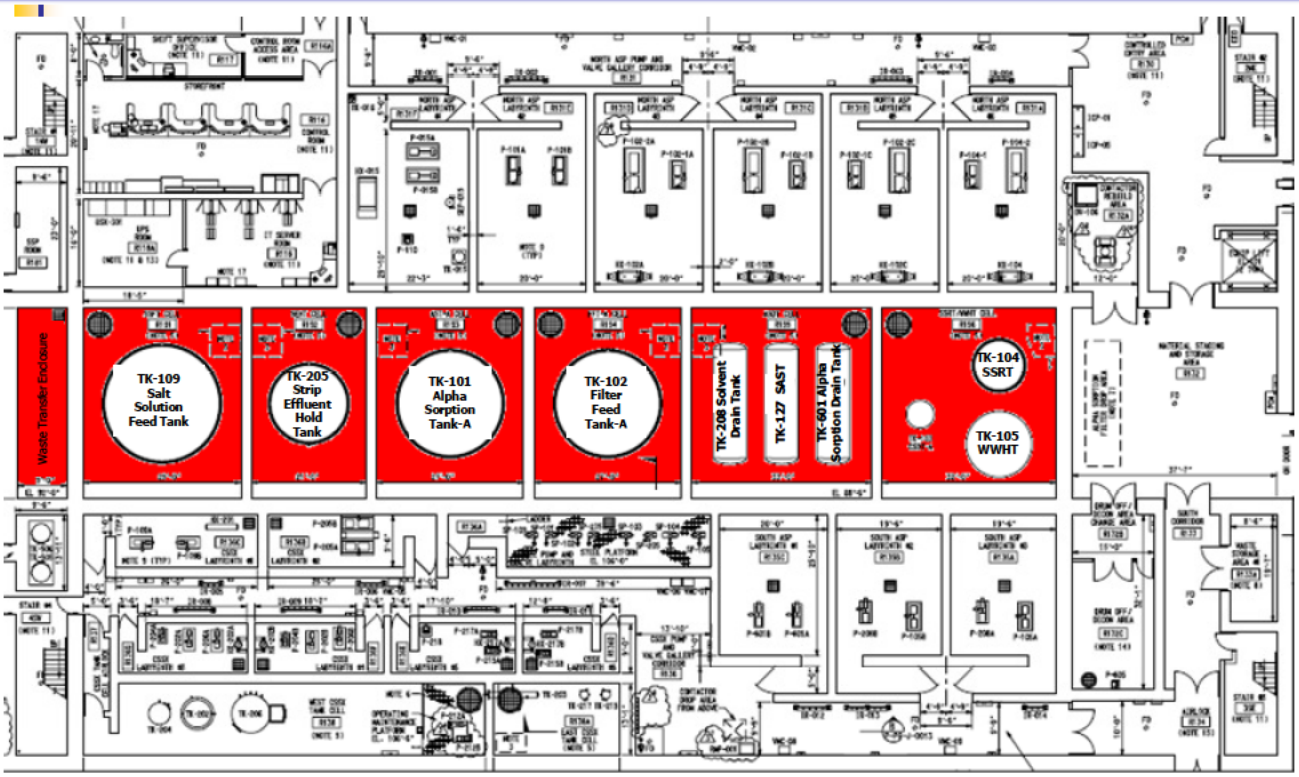

SWPGGS01.TP0101

12 of 274

The Central Processing Area shown here has:

- Five process Vessel Cells located at the 100' elevation (Grade/Ground level) and one, the Alpha Sorption Drain Tank Cell is at the 88'-6" elevation (Below Grade)
- The process tanks in these cells contain the High Curie Liquid Waste that is being processed
- The ASDT Cell also houses three of the Four Cross Flow Filters

This area is a zone 1 confinement area where there is the highest possibility of contamination. Personnel will not normally access these areas

Central Process Area
CONTROL ROOM
100' Elevation

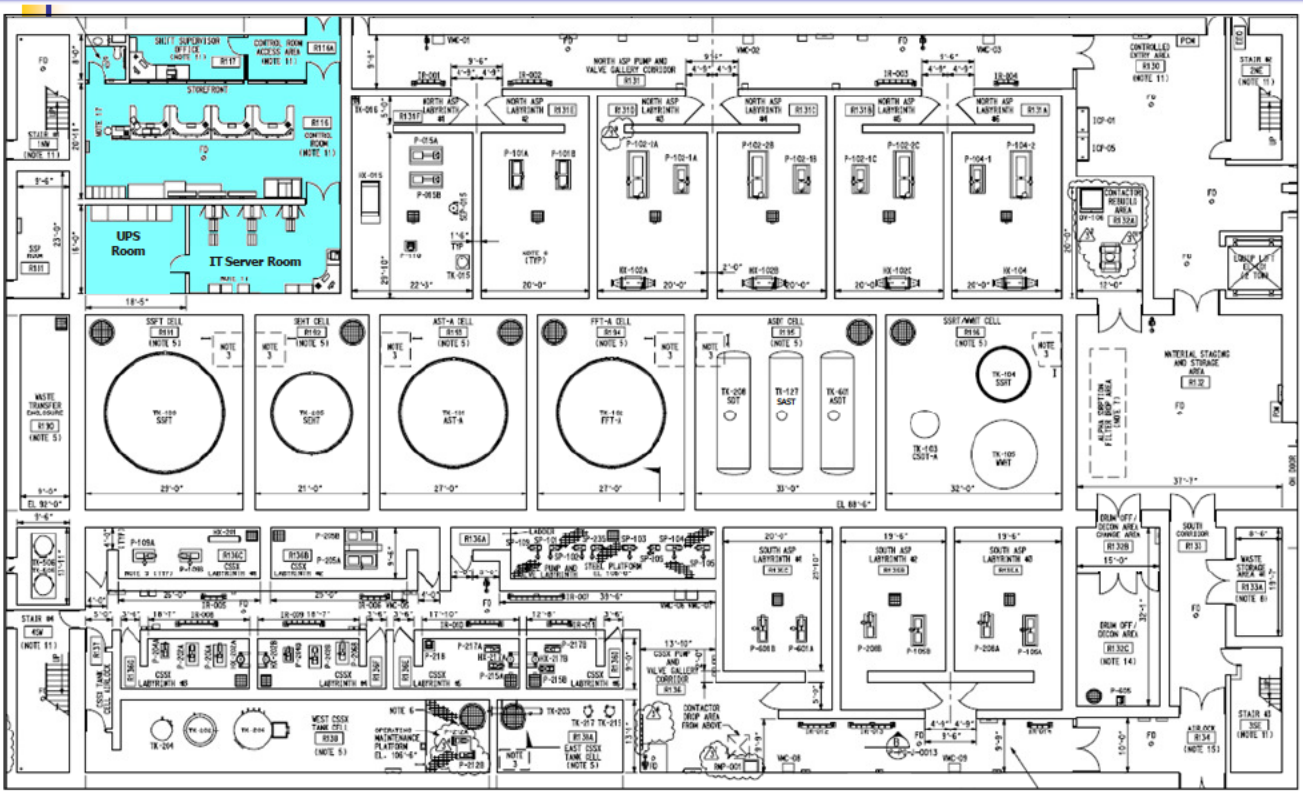

SWPGGS01.TP0101

13 of 274

The Control Room is located in the north west corner of the CPA

The Control Room is equipped with its own HVAC system.

The UPS room and IT server Room are located in the Control room area.

Central Process Area
ASP PUMP & VALVE GALLERY
100′ Elevation

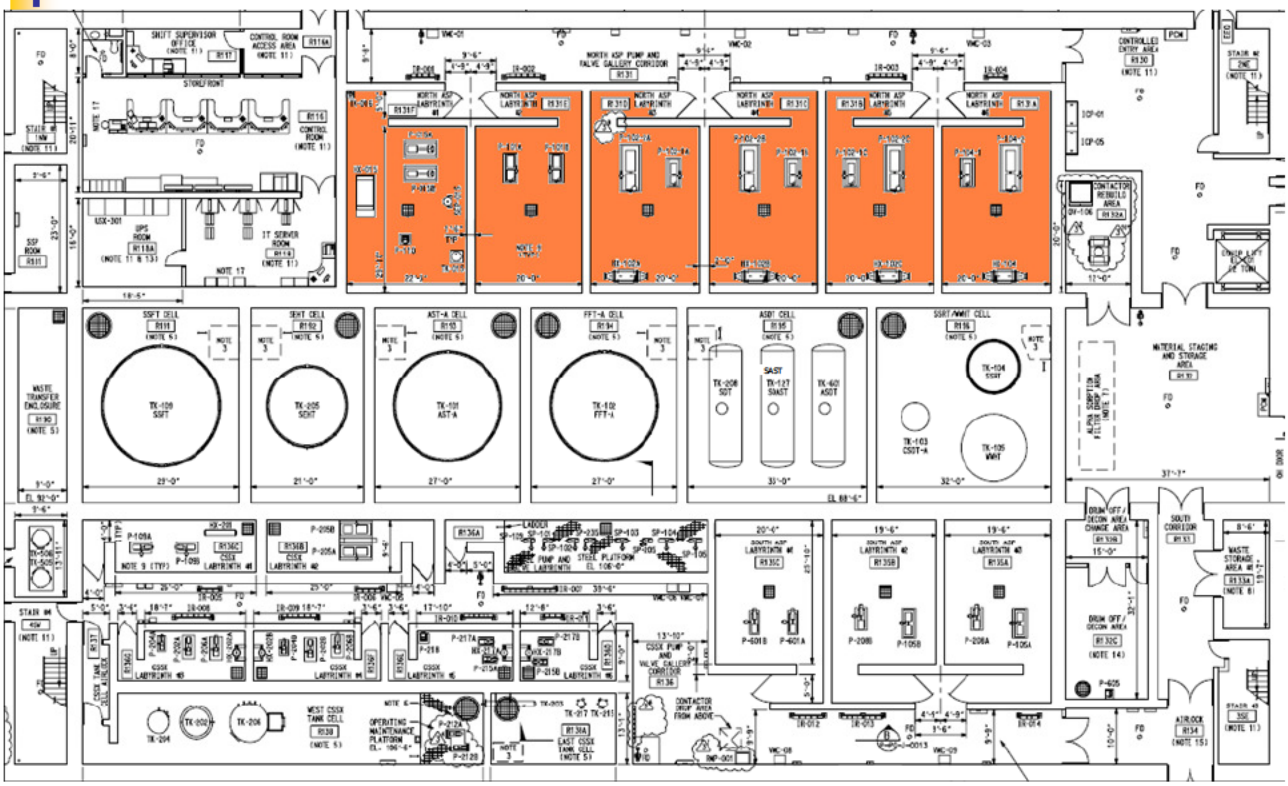

SWPGGS01.TP0101

14 of 274

The North ASP Pump & Valve Gallery (P&VG) is located adjacent to the north walls of the Process Vessel Cells.

- Notice the entrance to the P&VGs are designed for radiation shielding.
- Access is controlled into the P&VG rooms.

SOUTH SIDE
PUMP & VALVE GALLERIES
100' Elevation

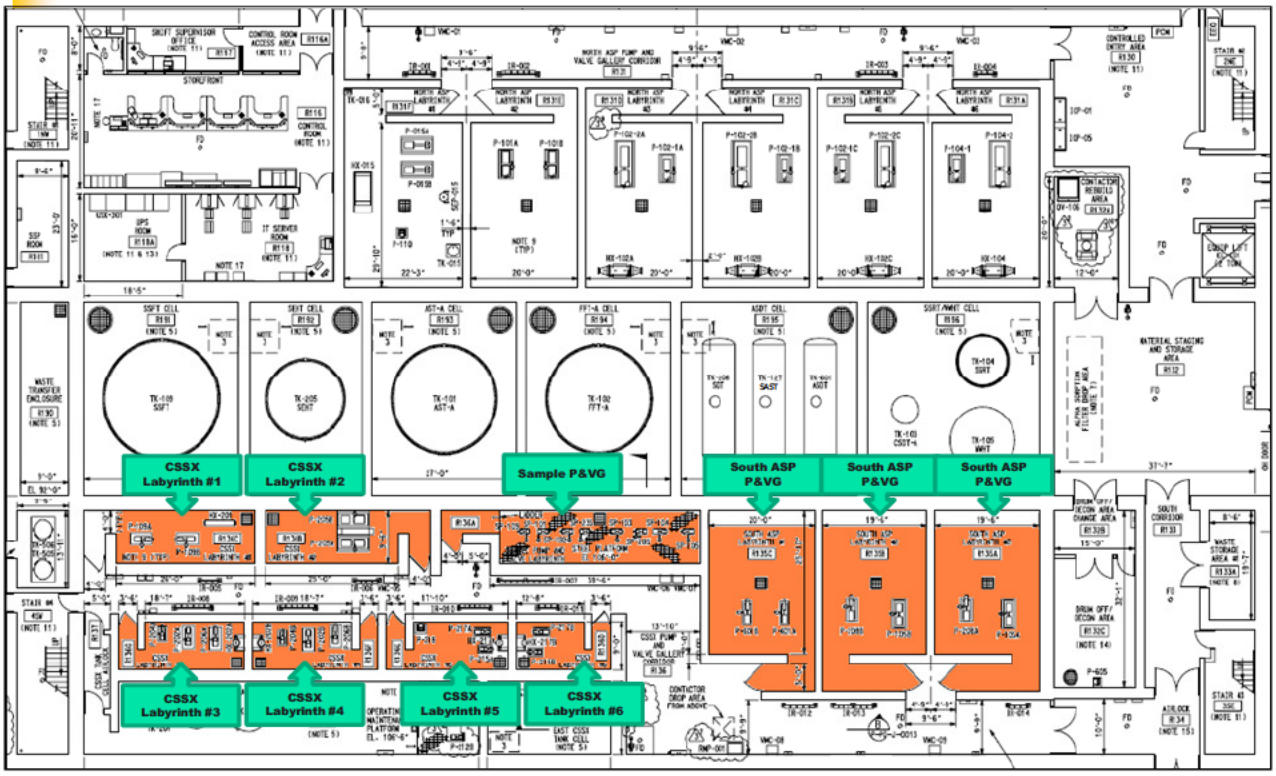

SWPGGS01.TP0101

15 of 274

The southern portion of the CPA contains the CSSX area.
South East is the CSSX P&VG, followed directly east by the Sample P&V Labyrinth, and South ASP P&V.

Central Process Area
EAST & WEST CSSX TANK CELL
100' Elevation

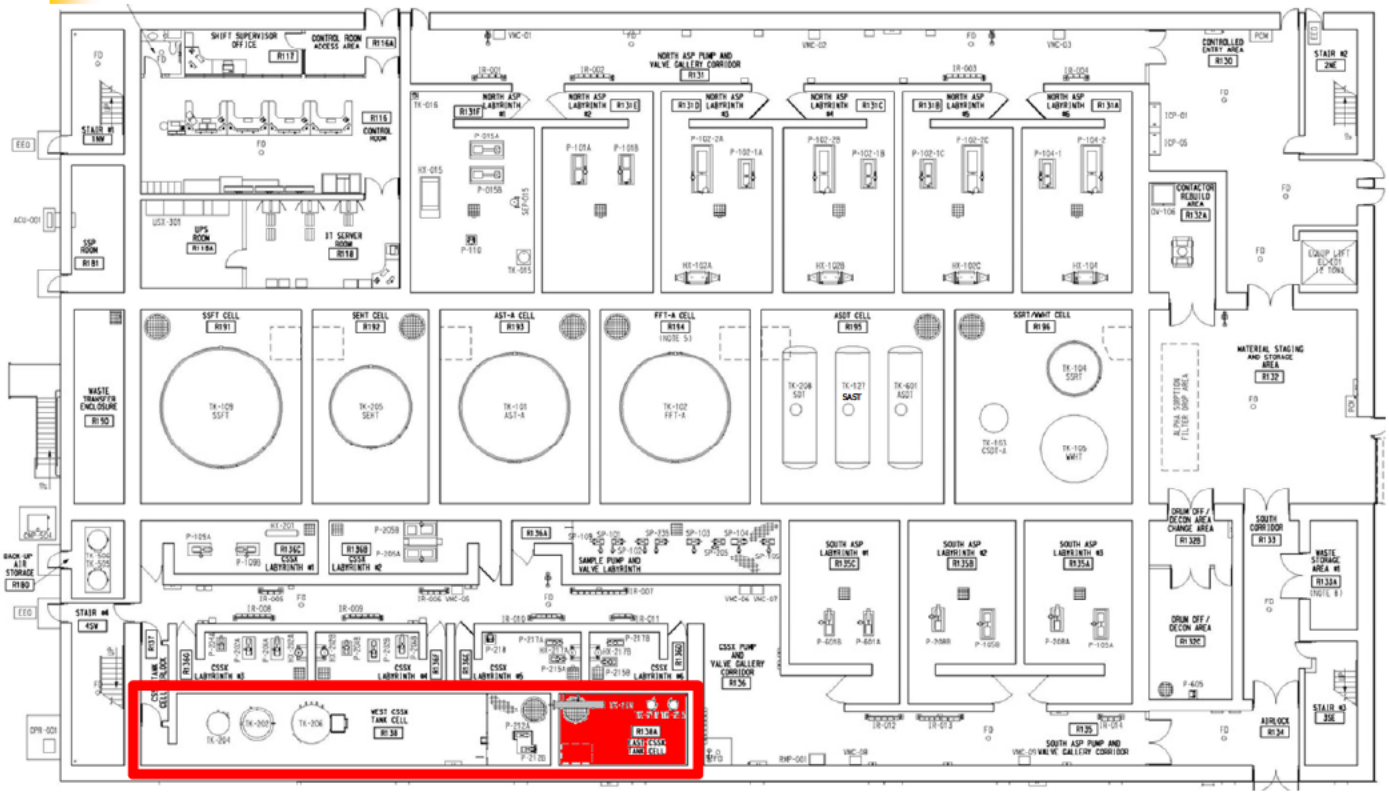

SWPGGS01.TP0101

16 of 274

The CSSX Tank Cell located at the most southwestern corner of the CPA.

The CSSX Tank Cell contains the CSSX process vessels and support equipment.

The CSSX Tank cell is divided by a shield wall into the East and West CSSX Tank Cells. Both are high-radiation areas; however, the East cell has the highest possibility of contamination.

- The West CSSX Tank Cell contains the Caustic Wash Tank, the Solvent Hold Tank, Ba-137 Decay Tank.
- The East CSSX Tank Cell contains the Strip Effluent Coalescer, the Solvent Strip Feed Tank, and the Strip Effluent Pump Tank

This area is a zone 1-confinement area where there is the highest possibility of contamination. Personnel will not normally access these areas

CSSX CONTACTORS & BUILDING EXHAUST COMPONENTS

116′ Elevation

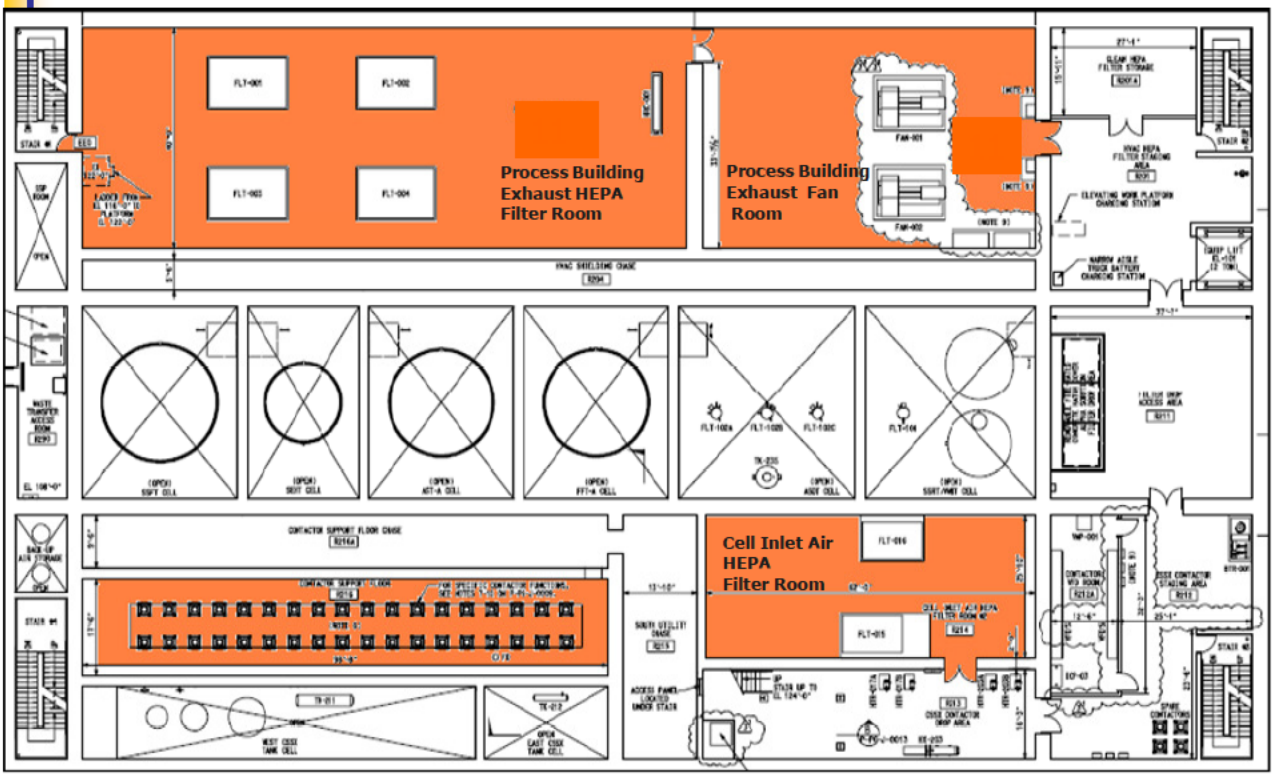

SWPGGS01.TP0101

17 of 274

- The CSSX Centrifugal Contactors are located in a bi-level cell (116’ and 124’ elevation) just above the CSSX P&VG
- The Process Building Exhaust HEPA Filter room and Process Building Exhaust Fan Room are also located on the North side 116’ level

ANALYTICAL LAB and BUILDING EXHAUST COMPONENTS

139′ Elevation

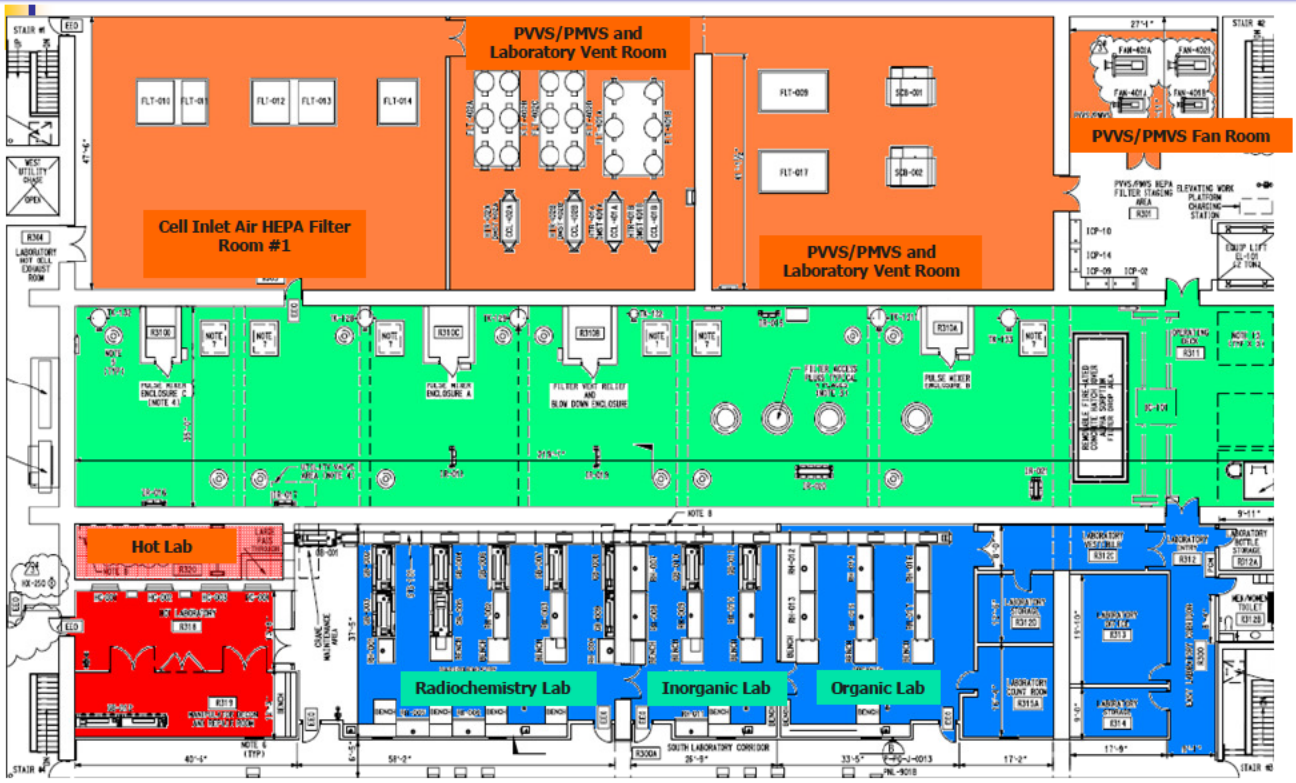

SWPGGS01.TP0101

1

The Analytical lab is comprised of four individual labs

- The organic lab
- The inorganic lab
- The radiochemistry lab
- The hot lab (remote handling of samples, normally non accessible)

The operating deck is located at this level.

- All maintenance for process cells will be done from here.
  - Change Cross Flow Filters
  - Remote-actuating valves
  - Thermocouple changes

This level also contains the Cell Inlet Air HEPA Filter Room #1, the PVVS/PMVS and Laboratory Vent Room and the PVVS/PMVS Fan Room

FSA, AFF, and CCA

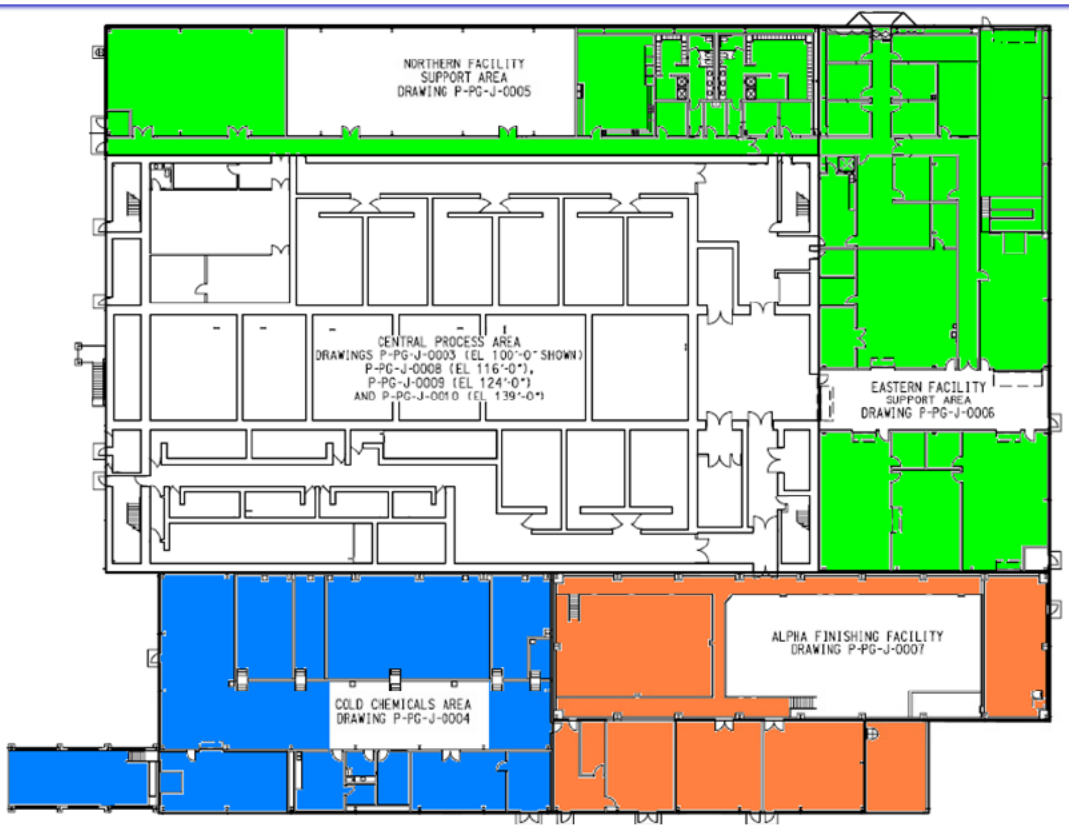

SWPGGS01.TP0101

19 of 274

The Alpha Finishing Facility (AFF), Facility Support Areas (FSA) and Cold Chemical Areas (CCA) are constructed with fabricated roofing (thermoplastic roof membrane over rigid insulation adhered to metal decking) and siding supported by structural steel an shallow foundations.

Why is construction lighter ion this area? Low radiation hazard.

ALPHA FINISHING FACILITY

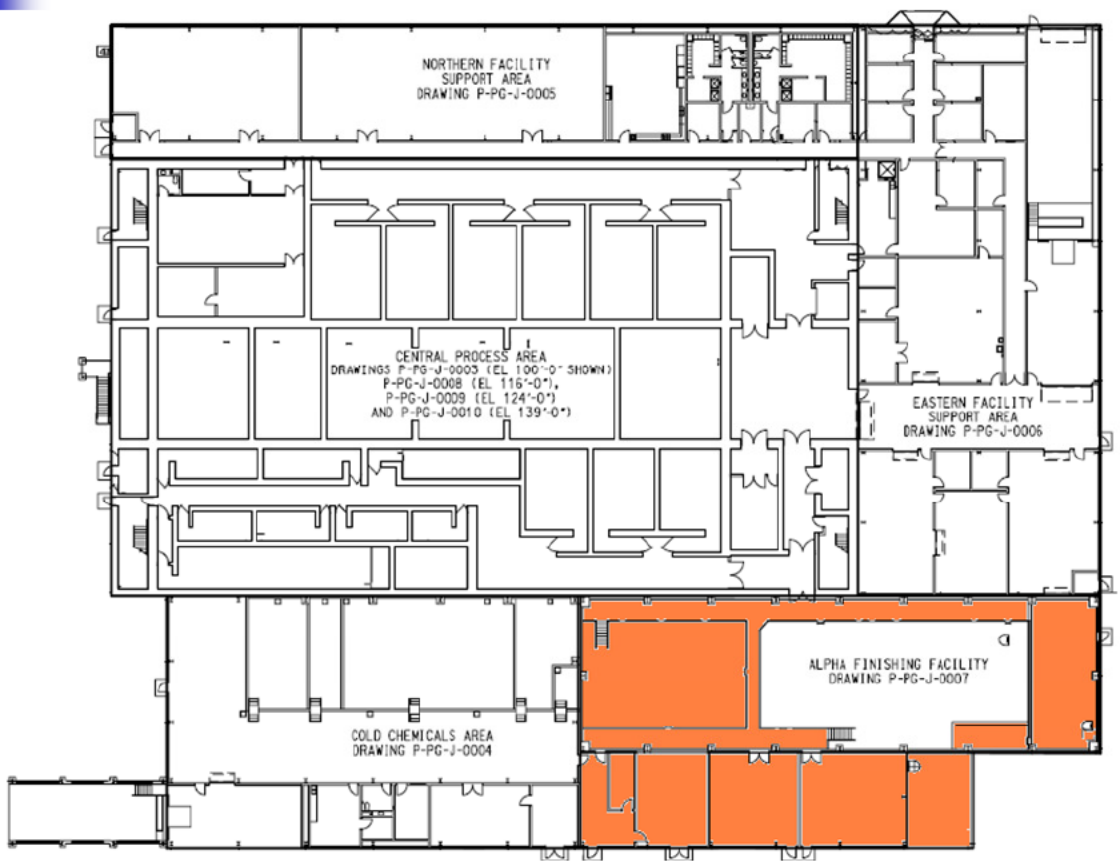

SWPGGS01.TP0101

20 of 274

The Alpha Finishing Facility is located in the southeastern portion of the facility.

ALPHA FINISHING FACILITY

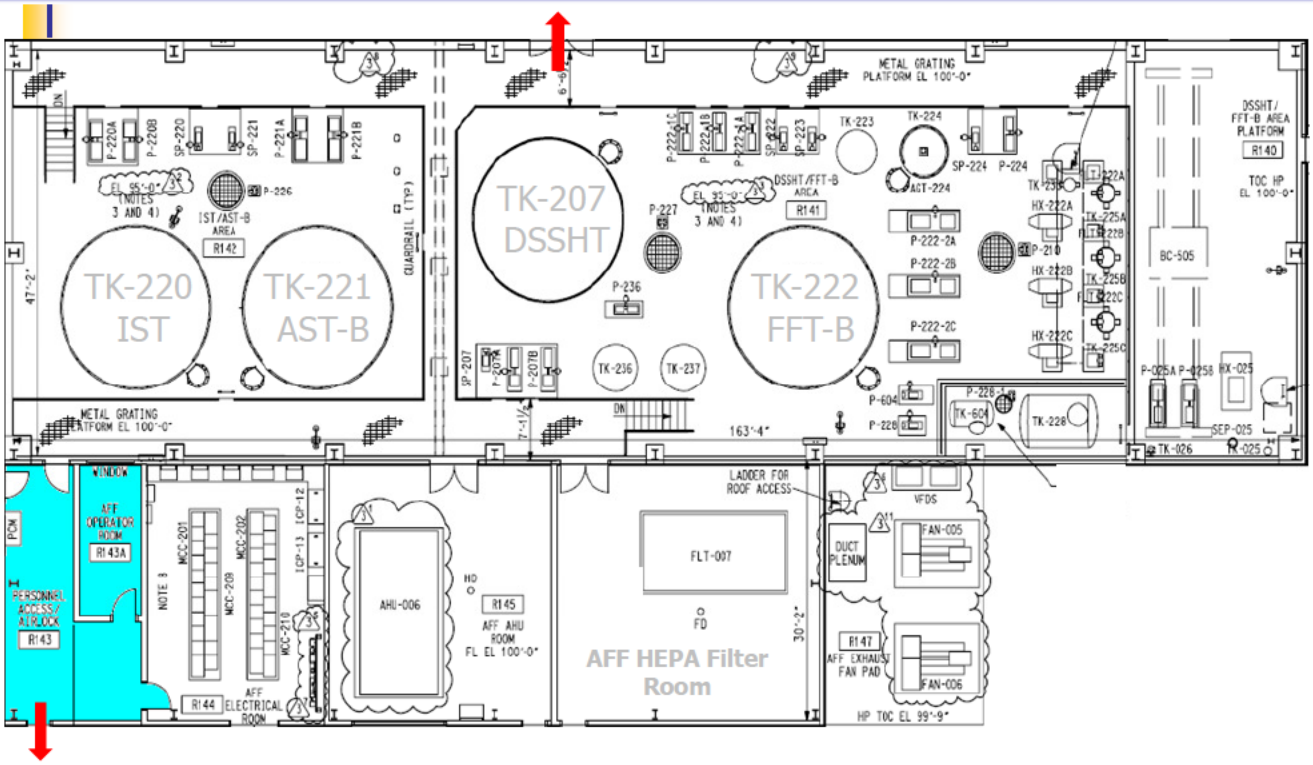

SWPGGS01.TP0101

21 of 274

Normal access and egress for the AFF is provided through a door that opens into the airlock between the CPA South Corridor and the South ASP P&VG (see arrow).

An exterior door on the south wall on the western side of the AFF opens into the AFF personnel access/airlock area.

COLD CHEMICALS AREA

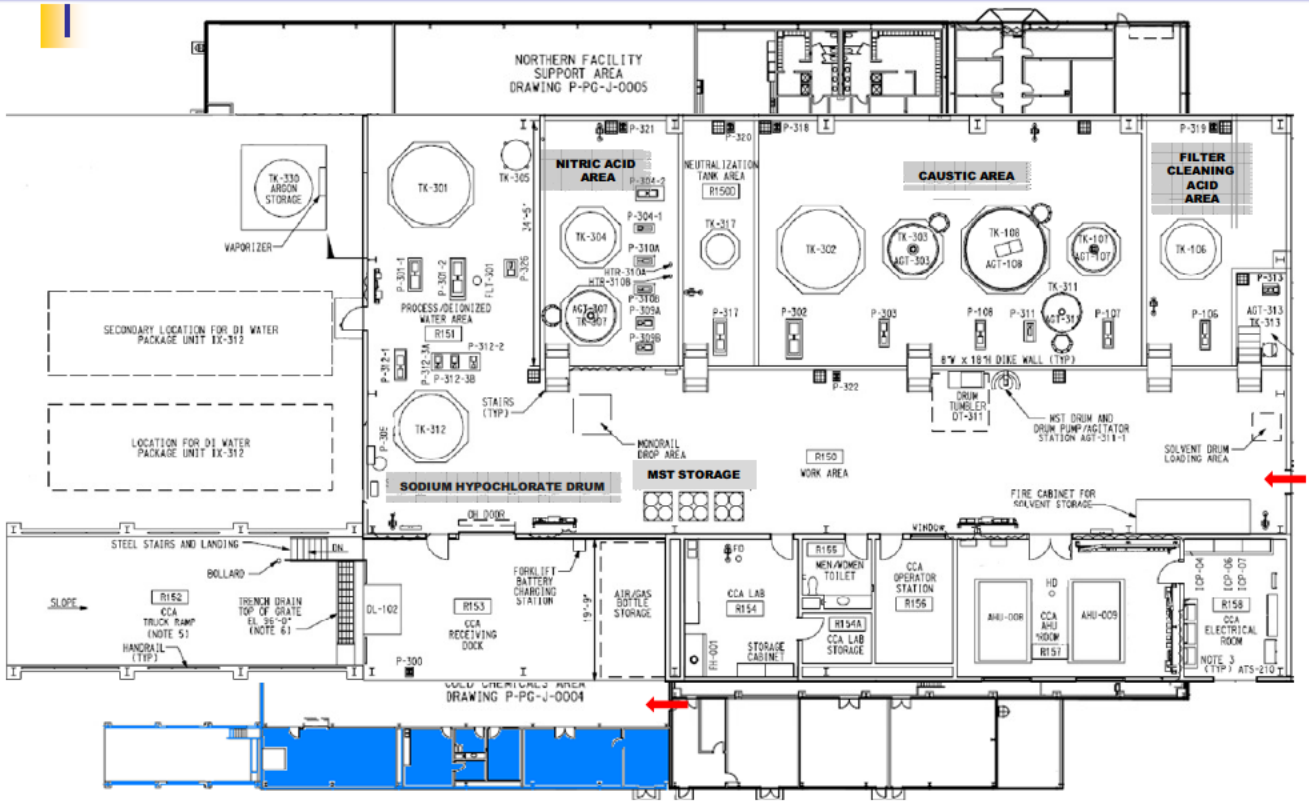

SWPGGS01.TP0101

22 of 274

The Cold Chemical Area is a steel structure adjacent to the southwest portion of the Process Building. It consists of one large room to house process support equipment to store and transfer acids, caustics, process water, deionized water, and MST.

NORTH & EAST FACILITY SUPPORT AREA

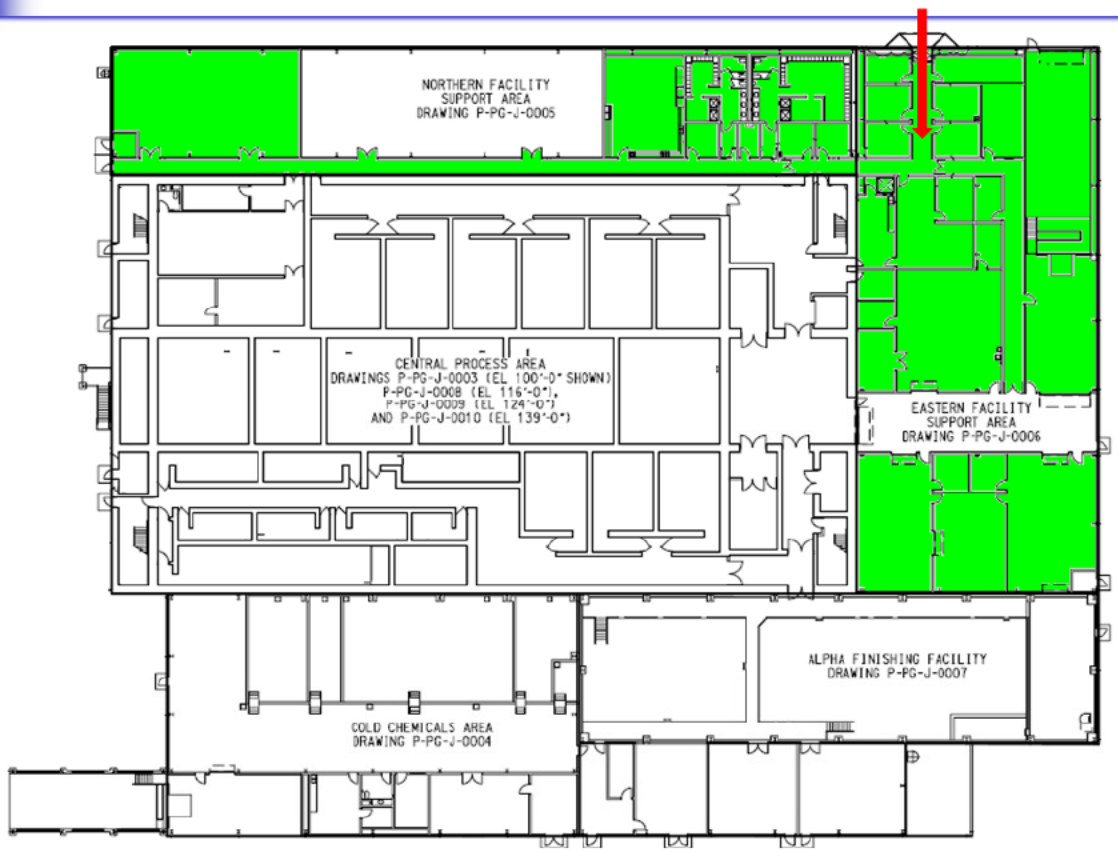

SWPGGS01.TP0101

23 of 274

The Northern FSA is located north of the CPA structure and is separated by an east-west corridor. From west to east, the Eastern FSA adjoins the Northern FSA and the CPA.

Normal access and egress point for the Process Building:

- Recessed covered doorway on the north wall of the FSA adjacent to the Truck Bay.
- Additional emergency exits.

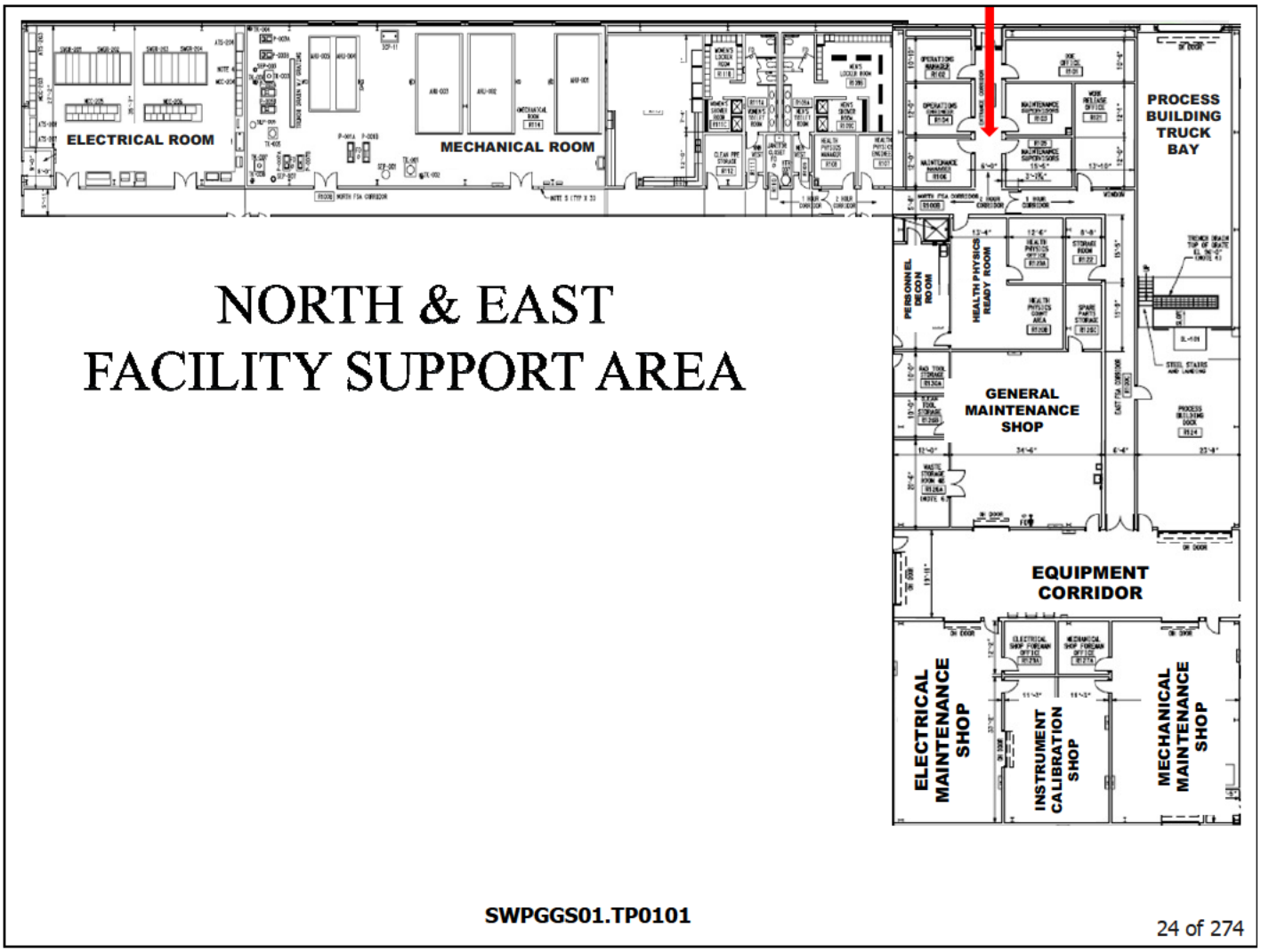

The Northern FSA includes:

- The Electrical Room,
- Adjacent to the Electrical Room on the southwest corner is a Fire Protection Valve room that is accessed from a west wall facility entrance.
- On the east side of the Electrical Room is a Mechanical Room that houses Air Handling Units (AHUs) for the Process Building Ventilation System (PBVS)
- Adjacent to the Mechanical Room are the Break Room, Toilet/Locker Rooms, Janitorial Closet, and Clean Personal Protective Equipment Storage.

The Eastern FSA area includes:

- The main personnel entrance to the SWPF.
- A DOE office and five other offices.
- A Work Release Office.
- A general storage room.

The Health Physics area consists of:

- Health Physics (HP) Offices,
- HP Ready Room,
- HP Count Area,
- Personnel Decontamination Room

The maintenance area consists of:

- General Maintenance Shop,
- Electrical Maintenance Shop where most off equipment electrical component repair will be completed,
- Mechanical Maintenance shop where most off equipment mechanical component repair will be completed,
- Instrument Calibration Shop where most off equipment calibration will be completed,
- Radiation Tool Storage Room where tools used in high radiation areas are stored and controlled,
- Clean Tool Storage Room where tools used in non-radiation areas are stored and controlled,
- Spare parts storage where facility spare parts are stored and controlled, and a
- Clean Contactor Maintenance Area where contactor maintenance is performed.

On the eastern-most end of the FSA is a Truck Bay that has a direct walkway entrance path to the equipment corridor and into the CPA's Material Staging and Storage Area.

CONCLUSION

- The mission of the SWPF
  - Efficiently reduce F/H-Area Tank Farms Liquid Waste
  - Safely treat high radioactive salt wastes
- The purpose of the SWPF
  - Provides needed concentration and increased throughput that will make the HLW program economically feasible.

CONCLUSION

- The three SWPF processes
  - Alpha Strike Process
  - Caustic Side Solvent Extraction Process (CSSX)
  - Alpha Finishing Process
- The plant layout
  - Central Processing Area
  - Alpha Finishing Area
  - Cold Chemicals Area
  - Facility Support Areas

Salt Waste Processing Facility

Module 2
Chemical Processes

SWPGGS01.TP0101

Objectives

1. List the SWPF chemical processes
2. State the purpose of each SWPF chemical process
3. List what chemicals are used in each processes
4. Describe the function of a chemical in a given process
5. State where the SDS/MSDS are located in the SWPF facility
6. For the chemicals used at SWPF, Describe each chemical's characteristics and first aid treatments

SWPF Process Chemicals

Alpha Strike & Alpha Finishing Processes

- Sodium hydroxide (NaOH)
- Monosodium titanate
- Nitric acid (HNO_3)

Caustic Side Solvent Extraction Process

- Solvent
- Nitric acid (HNO_3)
- Sodium hydroxide (NaOH)

Water Treatment

- Sodium hypochlorite (NaOCl)

Alpha Strike & Alpha Finishing Chemical Processes

- Caustic Adjustment (Alpha Strike only)
- MST Adsorption
- Cross Flow Filter Cleaning

Alpha Strike & Alpha Finishing Chemical Processes

- **Caustic Adjustment (Alpha Strike only)**
  - What is caustic adjustment?
- **MST Adsorption**
- **Cross Flow Filter Cleaning**

Caustic Adjustment (Alpha Strike Only)

What is caustic adjustment

- Addition of 1.66M sodium hydroxide to reduce sodium concentration from 5.6 – 7 molar (M) down to 5.6M
- Optimize MST actinide removal
- Prevents aluminum precipitation

Sodium hydroxide (NaOH)

- Caustic soda solution
- Also called lye

SWPGGS01.TP0101 32 of 274

Caustic Adjustment

Salt solution in Tank 49 is expected to have a sodium concentration in the range of 6 – 8 molar (M).

For one or two MST strike operations, the sodium ion (Na+) concentration in AST-A is reduced to 5.6M sodium (Na). This dilution is accomplished by adding approximately 5,000 gallons of spent process solutions (adjusted to 1.66M sodium hydroxide), wash water, and caustic dilution (1.66M sodium hydroxide [NaOH]) from the Caustic Dilution Feed Tank (TK-108). Sodium concentrations at this level have been determined to improve the actinide removal by monosodium titanate (MST).

Sodium concentrations at this level also support the chemistry requirements of the (CSSX) process.

Note: 1.66M sodium hydroxide (NaOH) is used for diluting AST-A instead of process water to reduce aluminum precipitation. Sodium hydroxide maintains the solution highly alkaline, which supports aluminum dissolution. Aluminum precipitation can cause problems in the CSSX contactors.

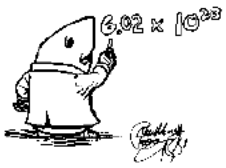

What is a Mole?
1 mole of a particle = 6.02214×10^{23} particles
Molar = moles/liter

Alpha Strike & Alpha Finishing Chemical Processes

- **Caustic Adjustment (Alpha Strike only)**
- **MST adsorption**
  - Monosodium titanate
  - What is the mechanism for MST adsorption
- **Cross Flow Filter Cleaning**

MST adsorption

- What is monosodium titanate (MST)
- What is the mechanism for MST adsorption
- Na+ concentration 5.6M
- Temperature dependant 77±5°F

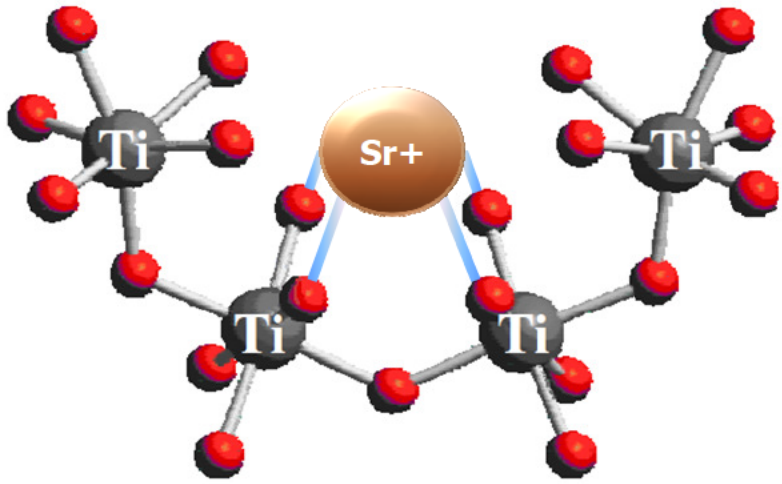

SWPGGS01.TP0101 34 of 274

MST Adsorption

Monosodium Titanate (MST)

•MST is a nanostructured material with very small crystals.

•Monosodium Titanate is for **adsorption** of strontium (Sr) and actinides in the AST-A or AST-B from the salt waste.

What is MST Adsorption

•Strontium and other actinides such as plutonium and californium for example, adsorb to the outside of the MST structure, much like iron shards to a magnet. The mechanism(s) by which strontium and the actinides are removed are not precisely known.

•This adsorption creates an MST/sludge with a particle size larger than 0.1-micron diameter. This allows the cross-flow filter to separate the strontium laden MST/sludge from the cesium laden Clarified Salt Solution.

•Adsorption is Na^+ concentration (5.56M) and temperature (77±5°F) dependant.

Alpha Strike & Alpha Finishing Chemical Processes

- **Caustic Adjustment (Alpha Strike Only)**
- **MST Adsorption**
- **Cross Flow Filter Cleaning**
  - Why do we clean Cross Flow Filters
  - How do we clean the Cross Flow Filters

Cross Flow Filter Cleaning

Why do we clean Cross Flow Filters

- Filter pores clog with organic and inorganic materials.
- Reduces filter efficiency

How do we clean the Cross Flow Filters

- Sodium hydroxide (NaOH) Caustic for organic materials
- Nitric acid (HNO3) for inorganic materials

SWPGGS01.TP0101 36 of 274

Cross Flow Filter Cleaning

Why do we clean the Cross Flow Filters

During routine operation, the filter flux will decrease due to fouling of sintered tube filter pores with suspended and colloidal solids.

How do we chemically clean the Cross Flow Filters

The cross flow filters are cleaned using two washes, a caustic wash using sodium hydroxide and a nitrate wash. The caustic wash is for dissolving organic materials.

Sodium Hydroxide (NaOH) Wash

Sodium hydroxide is a high pH, and is frequently used as an industrial cleaning agent where it is often called "caustic." It is added to water, heated, and then used to clean the Cross Flow Filter pores of organic materials.

Organic Materials – is matter that has come from once-living organisms. (Bacteria)

Nitric Acid Wash

Nitric acid will be used following the caustic wash. The low pH acid wash helps to clean inorganic materials from the filter pores.

Inorganic Materials – Typically metals

SWPF Process Chemicals

- **Alpha Strike & Alpha Finishing Processes**
- **Caustic Side Solvent Extraction Process**
  - Solvent
  - Nitric acid (HNO_3)
  - Sodium hydroxide (NaOH) Caustic
- **Water Treatment**

SWPGGS01.TP0101 37 of 274

SWPF Process Chemicals

<u>Caustic Side Solvent Extraction</u>

- Solvent
- Nitric acid (HNO_3)
- Sodium hydroxide (NaOH) Caustic

Caustic Side Solvent Extraction Chemical Processes

- Why perform the Caustic Side Solvent Extraction (CSSX) Chemical Processes

SWPGGS01.TP0101 38 of 274

Why do we perform Caustic Side Solvent Extraction Chemical Processes?

We want to extract and concentrate cesium (Cs^+) to reduce or minimize the volume of waste going to the Defense Waste Processing Facility (DWPF) and maximize the volume of Decontaminated Salt Solution (DSS) going to Saltstone Production Facility (SPF).

The DWPF vitrification process is more expensive and time consuming than making grout at SPF.

Caustic Side Solvent Extraction Chemical Processes

- Four (4) steps in CSSX process
  - Cesium Extraction
  - Solvent Scrub
  - Cesium Strip
  - Caustic Wash

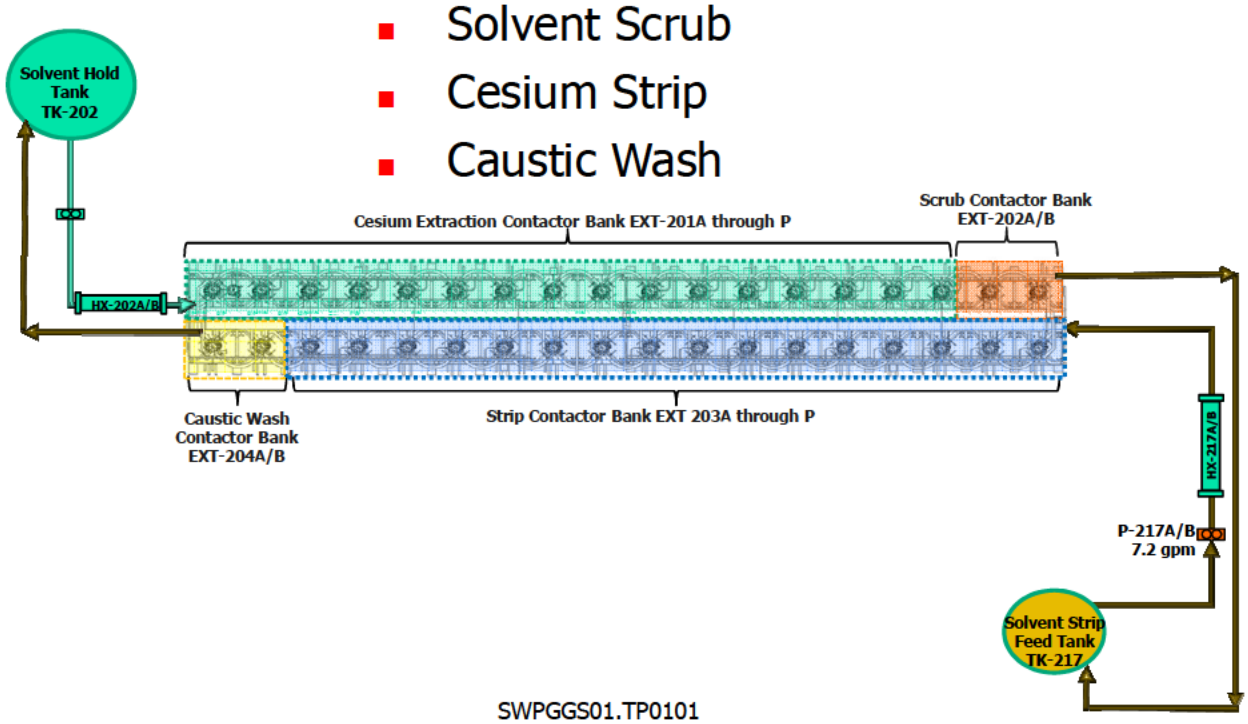

CSSX Process Step 1, Cesium Extraction

- **Why perform cesium extraction?**

Cesium Extraction

<u>Why do cesium extraction?</u>

The cesium extraction chemical process provides a means to extract cesium from the clarified salt solution (CSS) and concentrate it into the solvent. Remember we want to concentrate Cs+ for vitrification at DWPF and send Decontaminated Salt Solution (DSS) to SPF.

Solvent

- Solvent
  - The purpose of the solvent
  - What is the Solvent? A blend of:

69.14%	Diluent	Isopar®L
0.94%	0.01M	extractant (BOBCalixC6)
29.8%	0.50M	modifier (Cs-7SB)
0.12%	0.001M	suppressant (TOA)

SWPGGS01.TP0101 41 of 274

Purpose of Solvent

Solvent is the key chemical in the CSSX chemical process. In order for the CSSX process to be successful, the solvent must be mixed with the clarified salt solution (CSS) coming from Alpha Strike Process. The CSS and the solvent are immiscible therefore must be forced to mix so that the chemical reactions required for the CSSX process can take place. This is done in the SWPF CSSX contactor banks.

Solvent extraction is not a new method; it has been around for many years. It is a method used to separate compounds based on their relative solubility in two different immiscible liquids, usually water, and an organic solvent. It is an extraction of one substance from one liquid phase into another liquid phase. Solvent extraction has been used in nuclear reprocessing, ore processing, the production of fine organic compounds, the processing of perfumes, the production of vegetable oils and biodiesel, and in other industries.

What is the Solvent?

A unique composite solvent was developed for use at SRS for the caustic side solvent extraction (CSSX) process to remove cesium from caustic salt waste streams.

The unique solvent matrix is an organic chemical composite that is made up of the following components:

69.14% Isopar®L (Diluent)
Isopar®L makes up the majority of the solvent and is the carrier of the other three solvent components. Isopar®L provides good stability and promotes good hydraulics due to its low density and viscosity.

0.94% "**BoBCalixC6**" (Extractant)
BoBCalixC6 is the specially developed component of the CSSX solvent that is designed to extract the Cs^+ from the clarified salt solution.

29.8% "**Cs-7SB**" (Modifier)
Cs-7SB is the constituent of the solvent that functions to prevent the BoBCalixC6 (extractant) from separating out of the solvent. The modifier is not soluble in water but is soluble in the solvent and it will dissolve the extractant. So the modifier is added to the solvent to dissolve the extractant and hold it in the solvent.

0.12% "**TOA**" (Suppressor)
TOA is a component of the solvent that increases stripping efficiency by suppressing the effect of impurities on the stripping process.

Solvent

Solvent characteristics

- A high affinity for Cs (100 > than K+, 1000 >Na+)
- Can be reused
- Remain soluble in the solvent matrix
- Insoluble (immiscible)
- Density of 7.13 lb/gal, (light), DSS=10.42 lb/gal (Heavy)
- Solvent specific gravity = 0.856, DSS= specific gravity of 1.25

Specific gravity is the ratio of the density (mass of a unit volume) of a substance to the density (mass of the same unit volume) of a reference substance (water = 8.33 lb/gal)

The solvent characteristics:

•A higher affinity for cesium than for sodium or potassium.

Cesium selectivity in the extractant molecule is more than 100 times higher than for K^+ and more than 1,000 times higher than for Na^+. This high selectivity is required to achieve the desired separation of the cesium ions from the bulk sodium ions. K^+ competes with Cs^+ extraction by virtue of the fact that K^+ is normally present at higher concentrations.

•Must allow chemical reactions to release the extracted Cs^+ (stripping) during the process so that the solvent can be reused and a highly purified effluent generated for DWPF vitrification

•The capability for all solvent constituents to remain soluble in the solvent matrix

•Must be insoluble (immiscible) in the aqueous solutions (or at least as insoluble as possible) to facilitate phase separation

•Must differ in density from the salt solution and other process aqueous solutions so that the contactors can separate the two phases

•The ability to suppress ions that could negatively impact the ability to extract and then release Cs^+

•Be in a form that could be pumped and drained in a piping system

CINC V-10 CONTACTOR

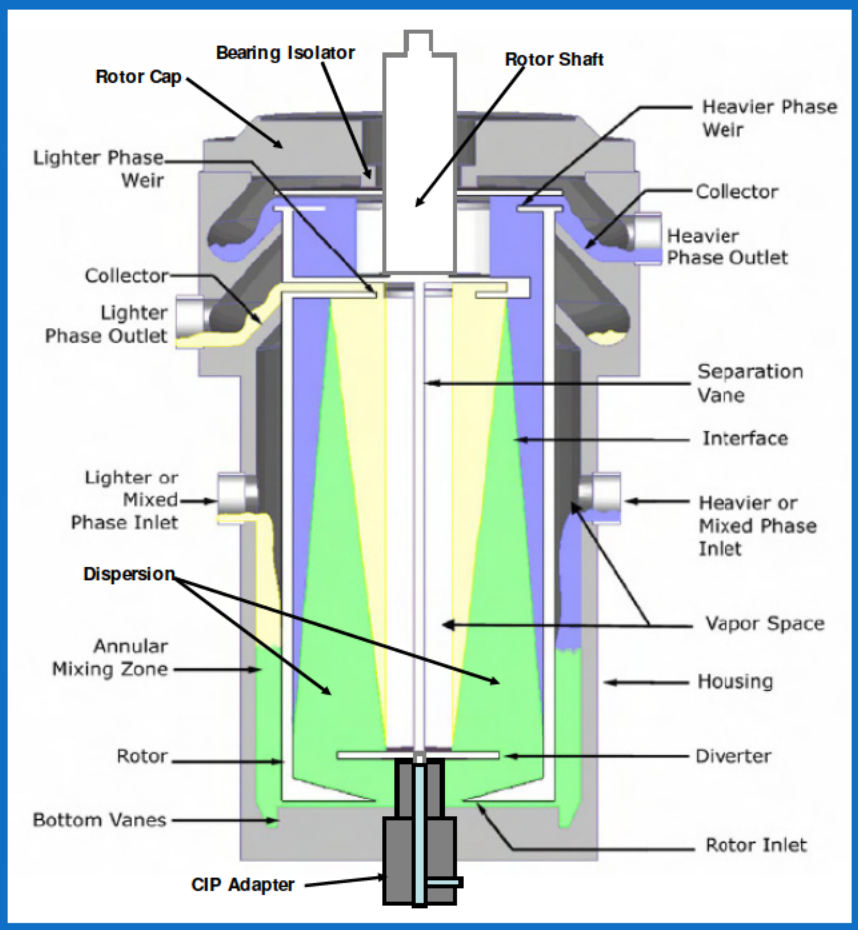

SWPGGS01.TP0101 43 of 274

V10 Extraction Contactors

Mix and separate two liquids of different densities.

How a contactor works

Two liquids with dissimilar densities fill the chamber (Annular Mixing Zone) between the housing and the rotor. The spinning of the rotor mixes the liquids through shearing action.

The mixed liquid is directed up from the bottom through the rotor inlet and around a diverter, which separates the liquid into one of four chambers. These chambers spin with the rotor. This spinning action is the centrifuge that separates the heavier aqueous from the lighter organic material.

The heavier material is routed through channels on the outside of the rotor cap and into the heavier phase weir and slung into the heavy phase collector. The lighter liquid stays closer to the center shaft and is routed through the lighter phase weir and then into the lighter phase collector.

Mechanism of Cesium Extraction

- BoBCalixC6 captures the Cs+ ion from the aqueous stream by providing a perfectly sized cavity (receptor site) for the Cs+ ion
- Cs+ ion fits comfortably within the extractant molecule as a softball would in a softball glove

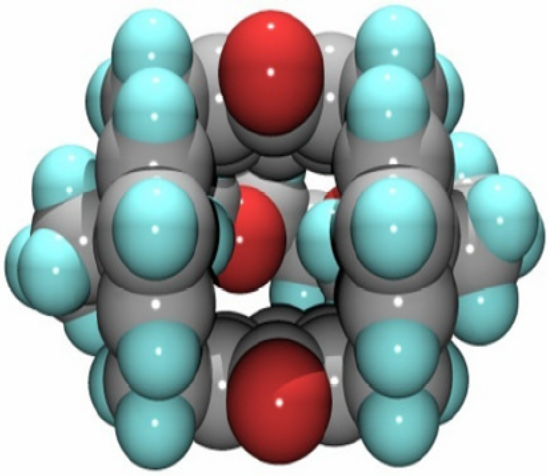

Empty Cavity

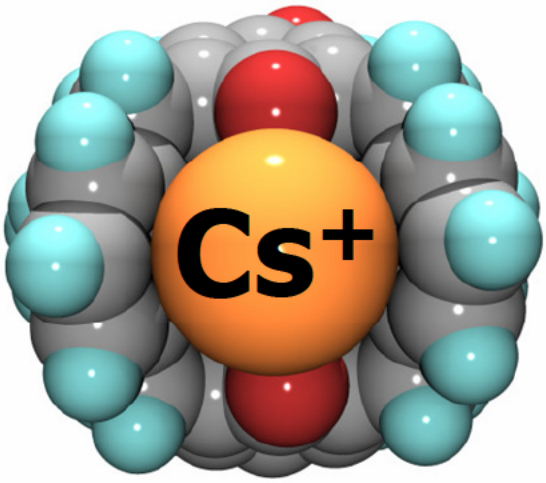

Cavity containing Cs^+

SWPGGS01.TP0101 44 of 274

Mechanism of cesium extraction

Due to the size of the opening in the extractant molecules, Cs^+ is removed in dramatic preference to other cations, in particular K^+ and Na^+. The extractant captures the Cs^+ ion from the aqueous stream by providing a perfectly sized cavity or receptor site for the Cs^+ ion.

Think of a softball glove holding a softball and then a golf ball. The fit of the softball in the glove's "pocket" is much tighter than that of the smaller golf ball in the same "pocket" so there is a higher potential for losing the golf ball than there is for losing the softball from the softball glove.

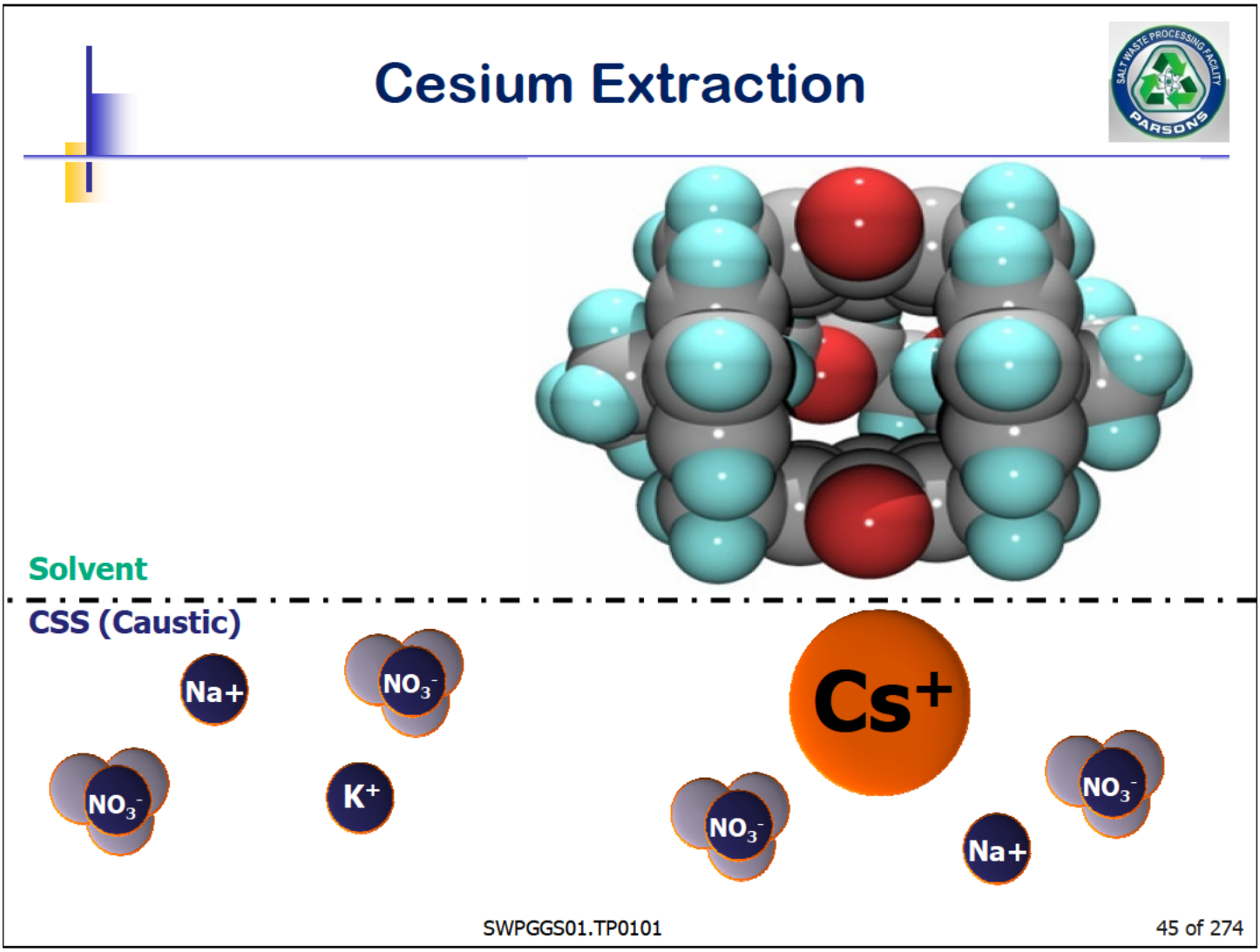

Cs^+ ion (cation) is always present as an ion pair; usually paired with a nitrate (NO_3^-) ion (anion) in the caustic salt solution. The extracted Cs^+ ion draws its NO_3^- ion partner with it to the BoBCalixC6 extractant molecule.

CSSX Process Step 2, Solvent Scrub

- Why scrub the solvent?
- What is the mechanism of solvent scrub?

Solvent Scrub

Why scrub the solvent?

Small amounts of Na^+, K^+, and other unwanted impurities (counter ions $NO3^-$ and OH^-), and trace levels of ionic sodium (Na), potassium (K), aluminum (Al^+), iron (Fe^+), and mercury (Hg^+) picked up during the extraction process. If these impurities were allowed to remain in the solvent, it would eventually lose extraction efficiency due to extractant receptor cavities being occupied.

What is mechanism for solvent scrub?

Cesium-laden solvent enters the Scrub Contactor Bank and is mixed with a dilute 0.05M nitric acid (HNO_3). In the low pH (acidic) environment, the Na^+ and K^+ and other impurities form soluble salts with nitrate ions. The weak nitrate pulls the NO_3^- and OH^- from the solvent and the sodium (Na), potassium (K), aluminum (Al^+), iron (Fe^+), and mercury (Hg^+) that is paired with the nitrate follows.

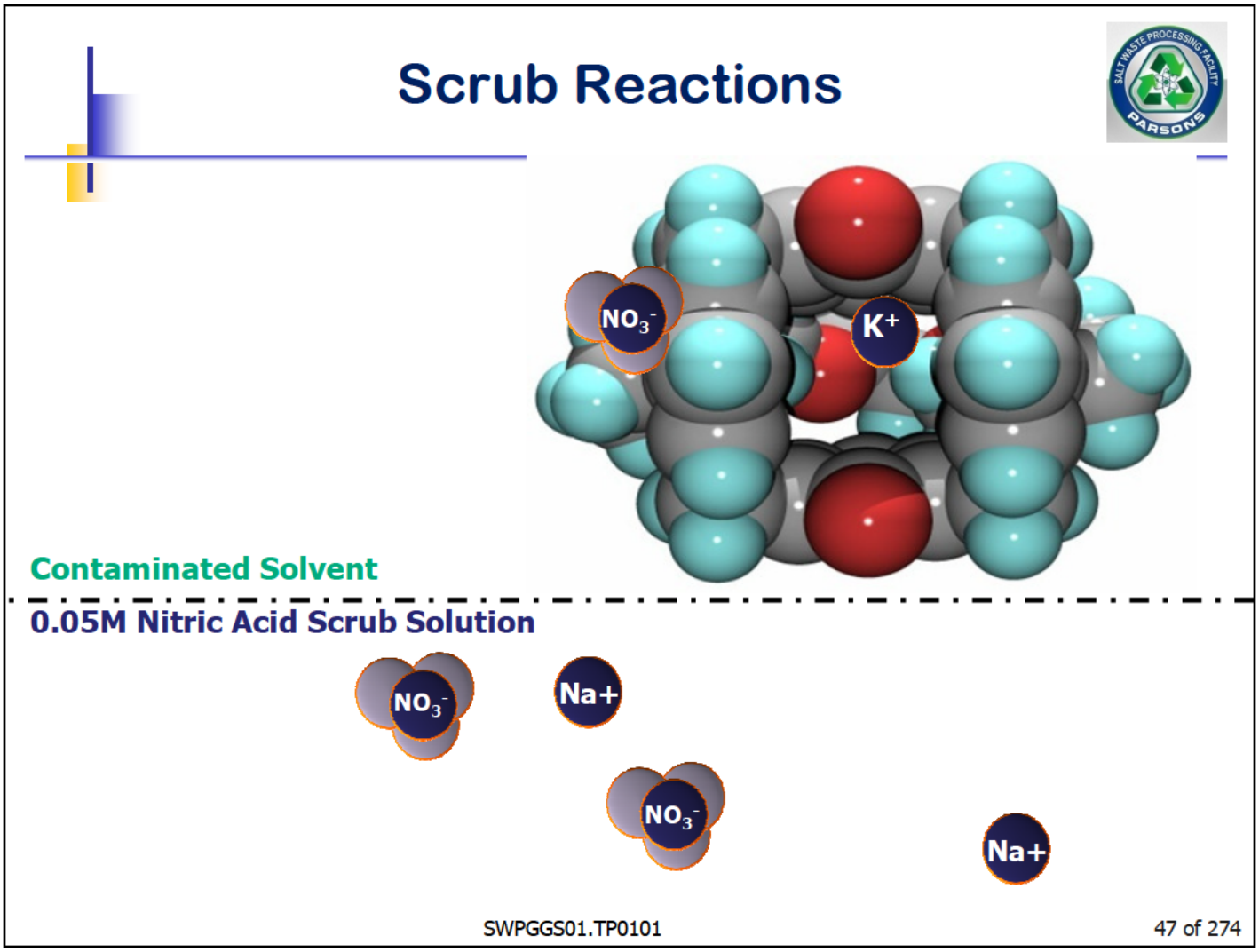

The sodium (Na^+), potassium (K^+), aluminum (Al^+), iron (Fe^+), and mercury (Hg^+) cations in the extractant receptor cavity is so loose that the weak bond is easily broken.

(Remember the golf ball in a catcher's mitt?)

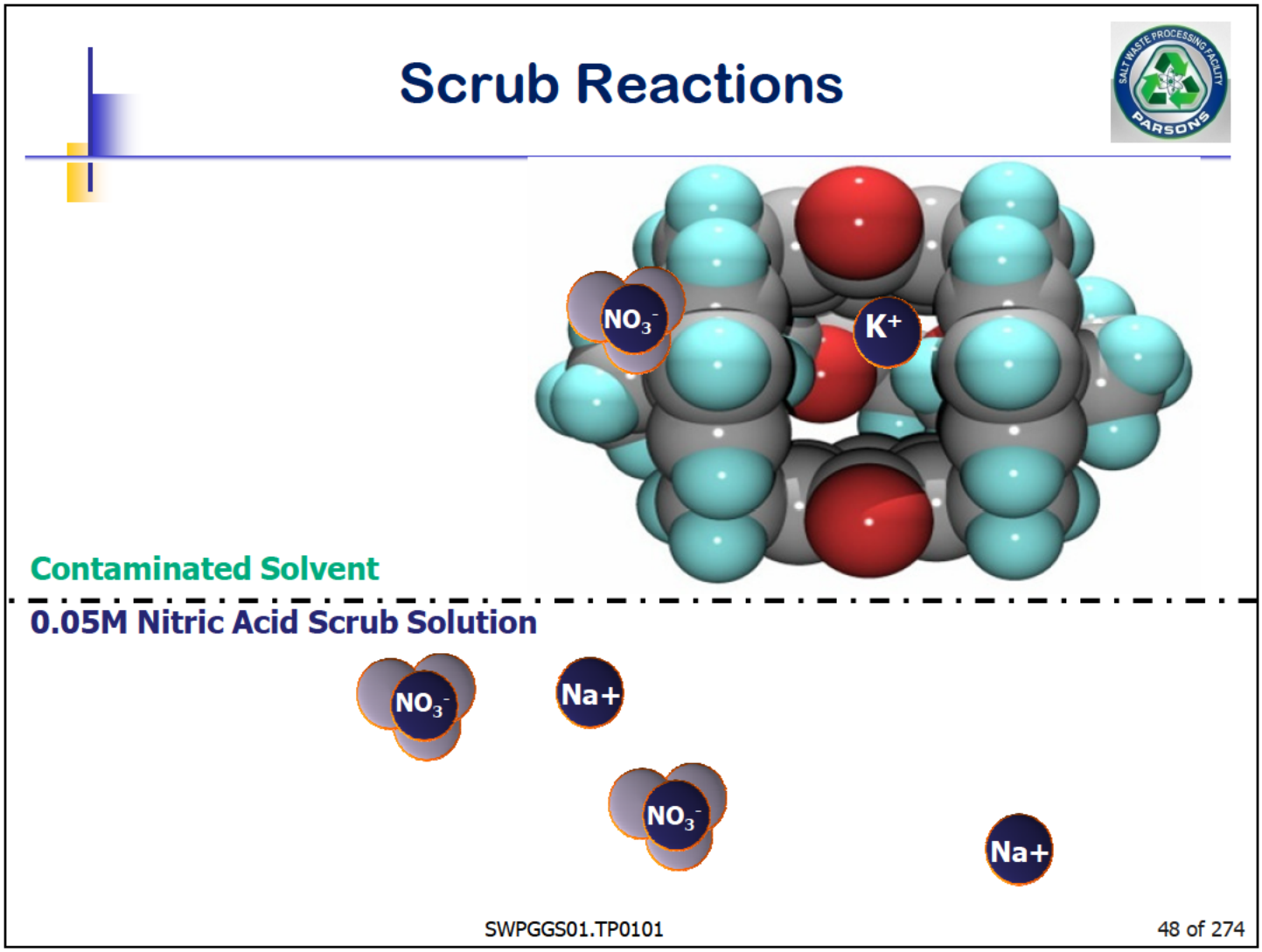

The solubility of the salts and the easily broken bond in the extractant receptor cavity allows the ion pairs to transfer to the acidic solution. When the solvent and acid solutions are separated, the contactors are essentially "scrubbing" the impurities from the solvent.

CSSX Process Step 3, Cesium Strip

- What is cesium strip?
- What is the mechanism of cesium strip?

Cesium Strip

<u>What is cesium strip?</u>
Cesium strip is the process used to remove or "strip" the cesium from the solvent into a weak nitric acid solution.

<u>What is mechanism for cesium strip</u>?
The CSSX process is designed to operate primarily by the "nitrate-swing principle."

Cesium Strip

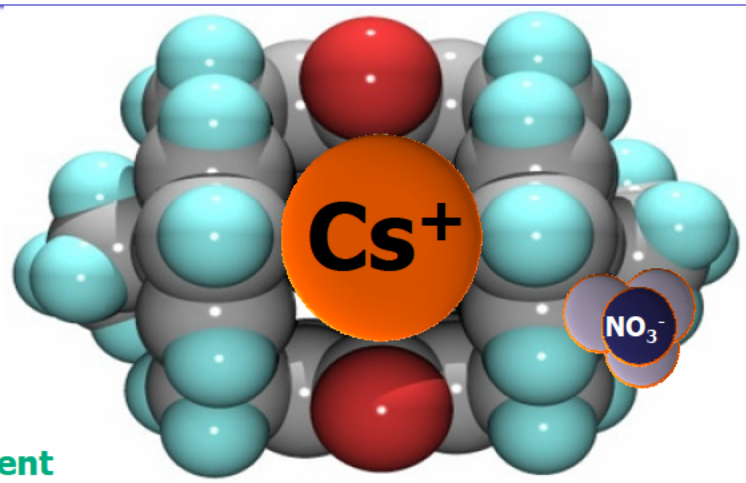

Cs^+ & Solvent

0.001M Nitric Acid Strip Solution

SWPGGS01.TP0101 50 of 274

Mechanism for cesium strip

The dilute nitric acid introduced during the stripping phase has a comparatively much lower concentration of nitrate ions. Since chemical concentrations naturally seek equilibrium, there is a natural strong tendency for the solvent nitrate ions to migrate to the acid solution (nitrate-swing) in the contactors.

Cesium Strip

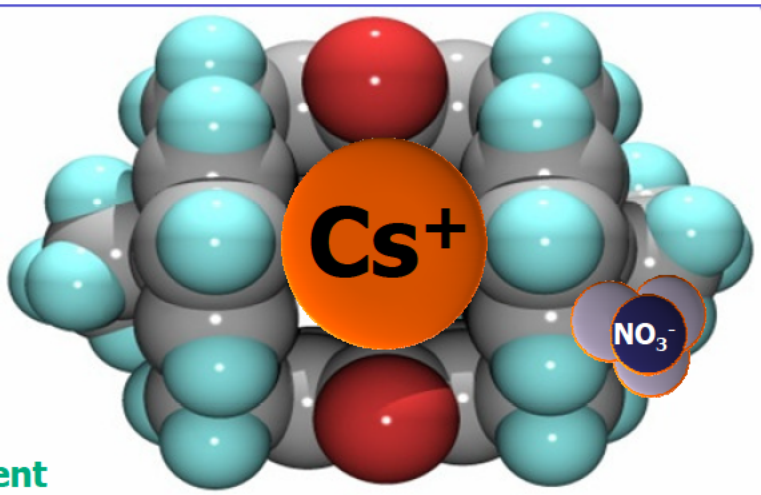

Cs^+ & Solvent

0.001M Nitric Acid Strip Solution

SWPGGS01.TP0101 51 of 274

Since the Cs^+ ion is soluble in the acidic environment and its nitrate ion pair partner has a strong migrating pull to the acidic solution, the Cs^+ ion is pulled from the extractant receptor cavity in the solvent to the 0.001 nitric acid strip solution. This reaction is also affected by temperature. Typically, cesium strip is 86 - 102°F.

CSSX Process Step 4, Caustic Wash

Why do caustic wash?

- The suppressant and modifier contained in the solvent degrade over time and forms impurities and pick up nitrates that change the pH and hinder solvent performance. Caustic wash removes these impurities and neutralizes the solvent.

What is caustic wash?

- The caustic wash process mixes 0.01M – 0.3M sodium hydroxide (NaOH) caustic with the solvent.

SWPGGS01.TP0101 52 of 274

Why do caustic wash?

Caustic wash neutralizes the acidic carry over from the Strip Contactor Bank and removes solvent degrading products and other contaminants out so that the solvent can be reused. The solvent is then returned to the Solvent Hold Tank (TK-202) for reuse.

What is caustic wash?

The caustic wash is 0.01M adjustable to 0.3M sodium hydroxide (NaOH) with the solvent.

Caustic Side Solvent Extraction Chemical Processes

- Four (4) steps in CSSX process
  - Cesium Extraction
  - Solvent Scrub
  - Cesium Strip
  - Caustic Wash

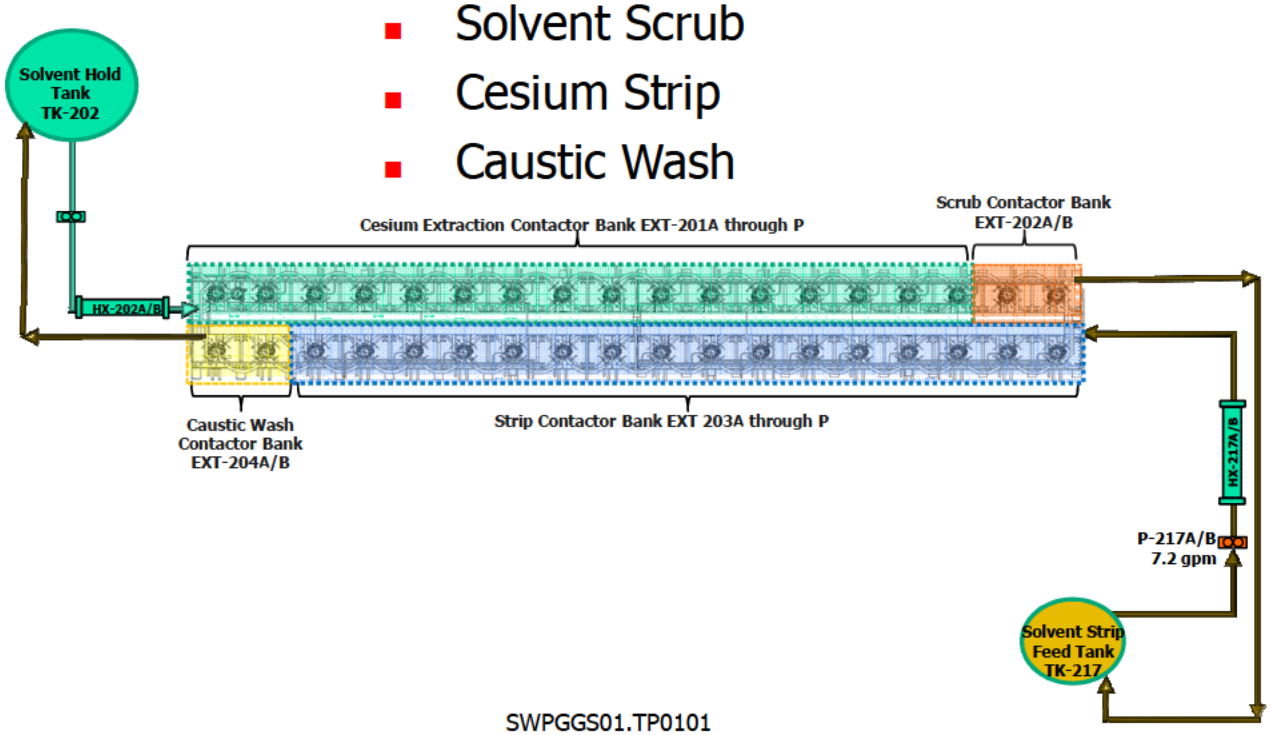

Water Treatment Process

Why do we treat process water?

- Preventing microbial growth
  - Why prevent microbial growth?
  - Sodium hypochlorite (NaOCl)

SWPGGS01.TP0101 54 of 274

Water Treatment

Why do we treat process water?

Domestic water is treated to prevent microbial growth, however, the treatment may not be strong enough for storage of water for an extended period of time.

Why do we want to prevent microbial growth?
Microbial growth can pose several problems, in particular, clog lines, and promote corrosion.

Sodium Hypochlorite (NaOCl) (bleach)
Sodium Hypochlorite (NaOCl) (bleach) is the chemical of choice for reducing and preventing microbial growth.

Safety Data Sheets / Material Safety Data Sheets (Locations)

- Control Room
- Cold Chemical Operator Room
- Laboratory
- On any facility computer

SWPGGS01.TP0101 55 of 274

Safety Data Sheet (SDS) / Material Safety Data Sheet (MSDS) Locations

- Control Room
- Cold Chemical Operator Room
- Laboratory
- On any facility computer

All chemicals covered in this module are processed into and stored in the Cold Chemicals Area

Chemical Safety

Remember, although the SWPF is a nuclear chemical processing facility, the primary health/safety hazard is from chemical accidents not radiation.

SWPGGS01.TP0101 56 of 274

The SWPF has shielding to protect workers, environment, and the public from radiation. Workers will however encounter the process chemicals and if not handled properly these chemicals can pose serious health hazards.

Ensure that procedures are followed when handling chemicals and proper PPE is worn per the SDS/MSDS.

SDS/MSDS Chemical Information

Monosodium Titanate

- Physical and Chemical Characteristics
  - Clear liquid with white suspensions
  - Non flammable

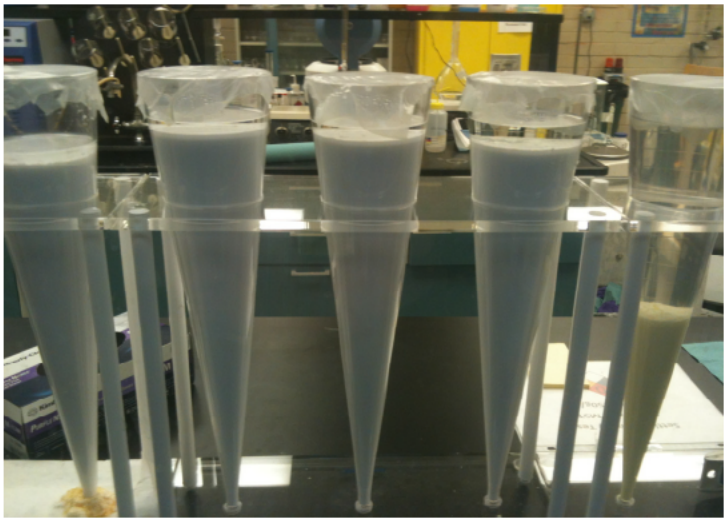

SWPGGS01.TP0101 57 of 274

Monosodium Titanate (MST)

<u>Physical and Chemical Characteristics</u>

- Clear liquid with white suspensions
- Non flammable

SDS/MSDS Chemical Information

Sodium Hydroxide (NaOH)

- Physical and Chemical Characteristics
  - White solid
  - Clear liquid

SWPGGS01.TP0101 58 of 274

Sodium Hydroxide (NaOH)

Physical and Chemical Characteristics

- White solid
- Clear liquid

Hazards

- Hydrogen Production
- Sodium hydroxide reacts with aluminum and water to release hydrogen gas. The aluminum takes the oxygen atom from sodium hydroxide (NaOH), which in turn takes the oxygen atom from the water, and releases the two hydrogen atoms.

SDS/MSDS Chemical Information

Solvent

- Physical and Chemical Characteristics
  - Colorless to brown, liquid
  - Slightly flammable
  - Combustion emits acidic fumes

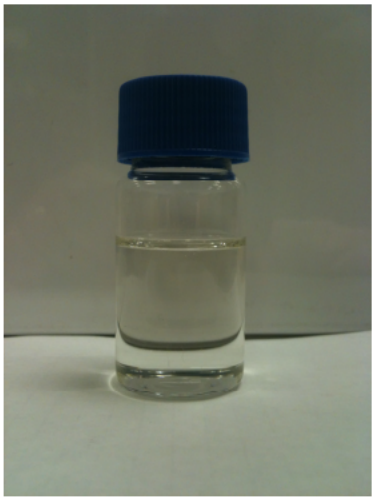

SWPGGS01.TP0101 59 of 274

Solvent

<u>Physical and Chemical Characteristics</u>

- Colorless to brown, liquid
- Slightly flammable
- Combustion emits acidic fumes

SDS/MSDS Chemical Information

Nitric Acid (HNO_3)

- Physical and Chemical Characteristics
  - Clear to yellow liquid

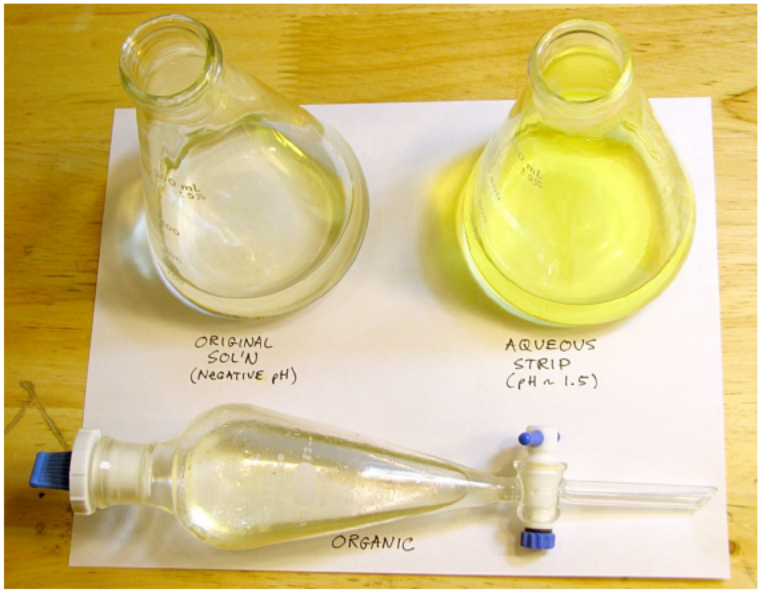

Nitric Acid (HNO_3)

<u>Physical and Chemical Characteristics</u>

- Clear to yellow liquid

SDS/MSDS Chemical Information

Sodium Hypochlorite (NaOCl) (Bleach)

- Physical and Chemical Characteristics
  - Clear yellow solution
  - Bleach smell

SWPGGS01.TP0101 61 of 274

Sodium Hypochlorite (NaOCl)

Physical and Chemical Characteristics

- Clear yellow solution
- Bleach smell

Chemical Exposure First Aid

Chemical	Eye (Flush with water)	Skin (Flush with water)	Ingestion (Induce Vomit)	Inhalation
Monosodium Titanate	15 min	15 min	No	Fresh Air
Sodium Hydroxide (NaOH) (Caustic)	Until irritation subsides.	With soap and water	No	Fresh Air If not breathing give artificial respiration
Solvent	Remove contact, hold eyelids open flushing for 15 min.	with soap and cold water.	No	Fresh Air If not breathing give artificial respiration
Nitric Acid (HNO_3)	Until irritation subsides.	with soap and cold water.	Give one once of milk of magnesia and. large quantities of water to dilute acid.	Fresh Air If not breathing give artificial respiration
Sodium Hypochlorite (NaOCl)	Remove contact, hold eyelids open flushing for 15 min.	15 min	No, give large quantities of water. DO NOT give vinegar or other acids.	Fresh Air If not breathing give artificial respiration

SWPGGS01.TP0101 62 of 274

In any incident where chemicals are ingested or inhaled, encounter eyes or skin, always seek immediate medical treatment.

Conclusion

SWPF chemical processes,

- Alpha Strike & Alpha Finishing Processes
- Caustic Side Solvent Extraction Process
- Water Treatment

Conclusion

What chemicals are used in the processes and how they function.

- Sodium hydroxide (NaOH) Caustic
- Monosodium titanate
- Solvent
- Nitric acid (HNO_3)
- Sodium hypochlorite (NaOCl)

Conclusion

- Where SDS/MSDS will be located in the SWPF facility
- Chemicals Characteristics
  - Physical characteristics
  - First aid treatments

Salt Waste Processing Facility
Module 3

Alpha Strike Process Overview

SWPGGS01.TP0101

Objectives

1. State the purpose of the Alpha Strike Process
2. Describe the sequence of operation in the Alpha Strike Process and the desired outcome of each step
3. Describe the Alpha Strike Process flowpath
4. State where components of the Alpha Strike Process are located
5. State the final outputs of the Alpha Strike Process

ALPHA STRIKE PROCESS PURPOSE

- To separate strontium and actinides from salt waste received from Tank-49 by adding monosodium titanate (MST) and filtering
- Filtration operations creates:
  - Low volume of highly concentrated MST/sludge laden with strontium (Sr) and actinide radionuclides to send to DWPF
  - High Volume of Clarified Salt Solution (CSS) suitable for CSSX processing

SWPGGS01.TP0101

68 of 274

The Alpha Strike Process is the first step in treating the salt waste.

The Alpha Strike Process will separate strontium and actinides from the salt waste by monosodium titanate adsorption and a filtration process. This will create a low volume of highly concentrated strontium and actinide laden sludge, referred to as MST/sludge, to transfer to the Defense Waste Processing Facility.

The Alpha Strike Process will also chemically adjust the salt waste by adding process water or caustic to achieve a 5.56 molar sodium content. This is to optimize the clarified salt solution for the Caustic Side Solvent Extraction (CSSX) process, the second step in the process for cesium removal. This will be covered in TP0400.

Total processing time per batch is 21.6 hours

ARP and MCU has a throughput of ≈4-6gpm
SWPF will be greater than 21.6gpm. 4 times ARP and MCU.

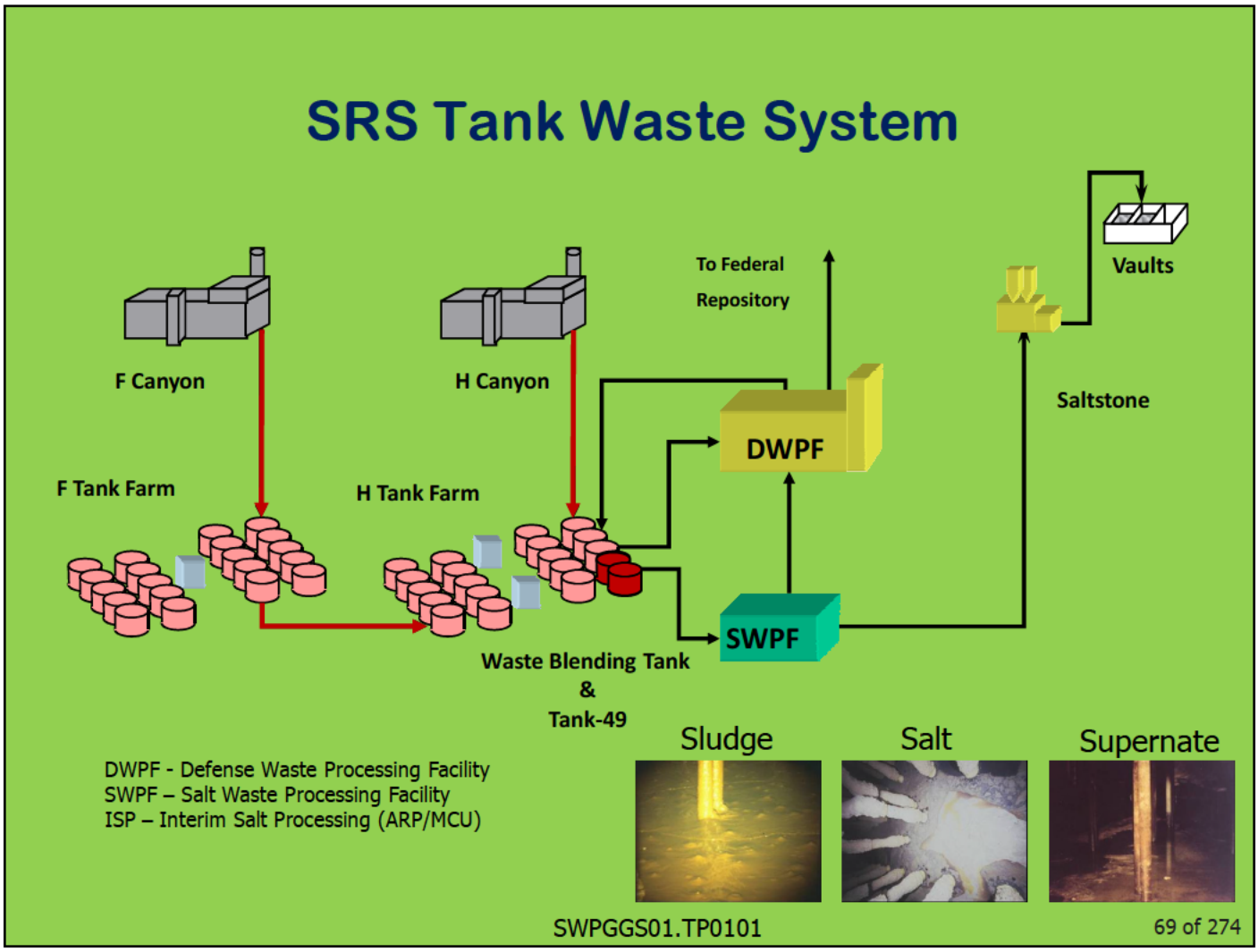

Where does the Salt Waste come From?

F and H Canyons activity produced the waste that is stored in F and H Tank Farm.

Liquid waste is transferred from various storage tanks within F and H Tank Farm to a Waste Blending Tank and then to Tank 49.

H-Tank Farm

Waste Blending Tank

- Macro-batches are prepared by additions and chemical adjustments
- Waste is mixed and sampled to allow characterization
- Waste is transferred to Tank 49

Tank 49

- Tested to be compliant with SWPF WAC
- Typically 0.05 weight percent (wt%) solids
- ≤ 600 parts-per-million (ppm) entrained sludge solids

SWPGGS01.TP0101

70 of 274

Macro Batches

In a Waste Blending Tank (one of a number of tanks) macro-batches are mixed, and sampled for chemical characterization. It is then transferred to Tank 49.

Once the waste is transferred to Tank 49, it is tested to be compliant with the Salt Waste Processing Facility Waste Acceptance Criteria.

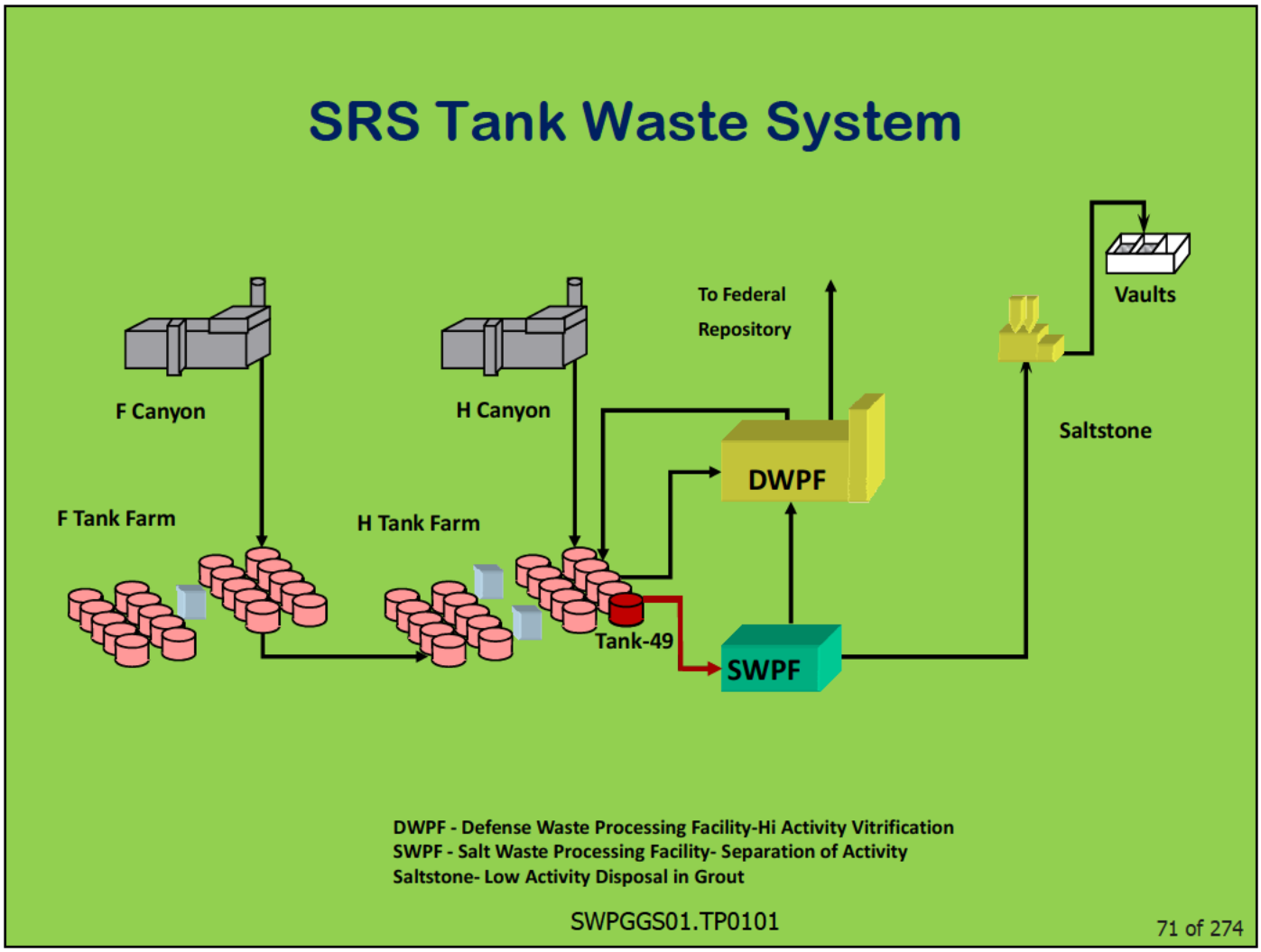

Micro Batches

From Tank 49, 23,200 gallon Micro Batches are staged for transfer to the Salt Waste Processing Facility where it will be processed.

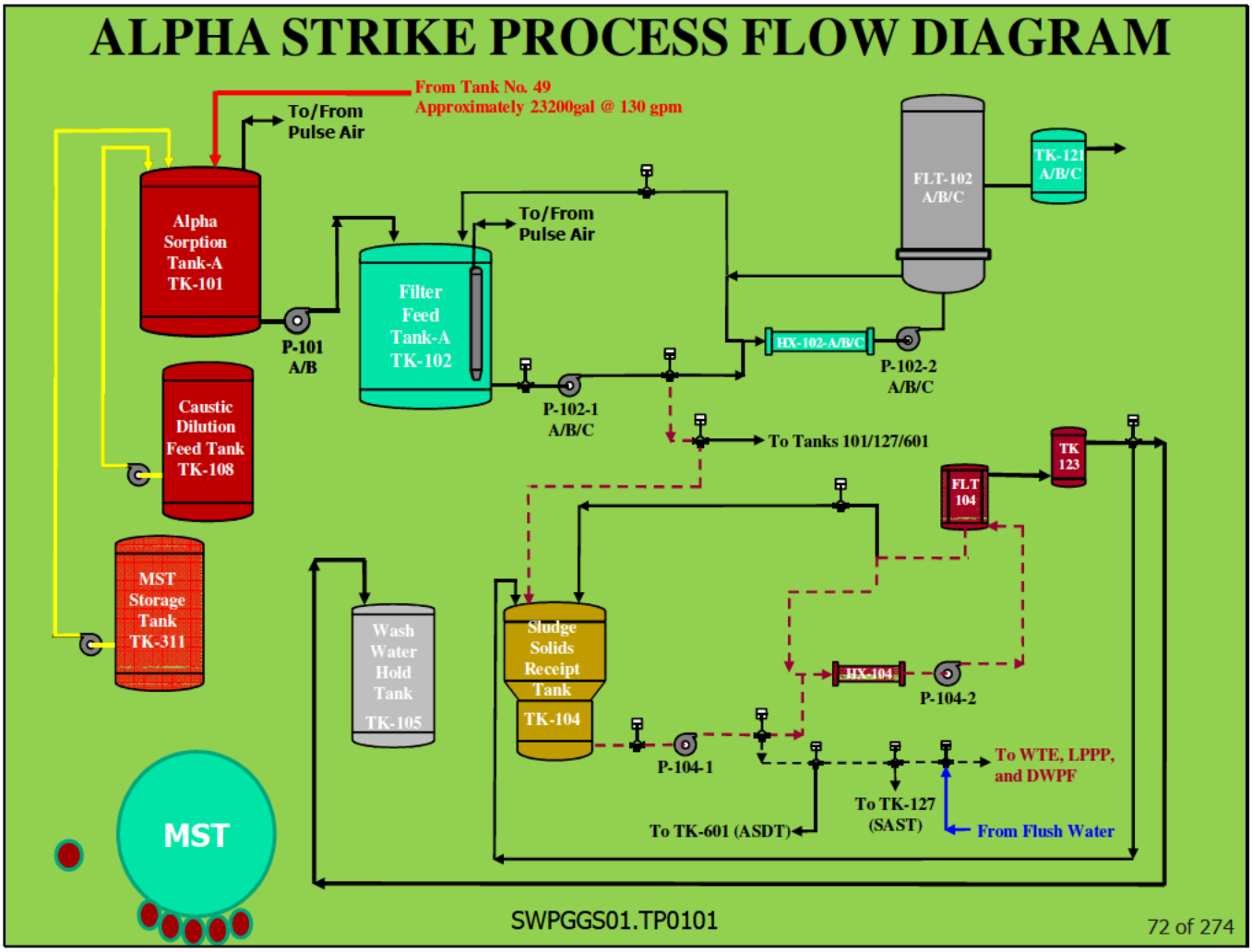

Alpha Strike Process Flow Path

Micro batches of salt waste will be transferred from Tank-49 to the Alpha Sorption Tank-A for processing at 130 gpm. Total transfer time 2.9 hours.

Caustic and recycled wash water is then added to dilute the salt waste to reduce the waste to a 5.56 molar sodium content. This maintains PH to prevent Aluminum precipitation, MST adsorption is Na+ and temperature dependent. Temperature is 77°F ± 5°F.

Approximately 71 gallons of 15 wt% monosodium titanate (MST) is added to yield a nominal concentration of 0.4 grams of MST/liter of solution. MST will adsorb the strontium and actinides, creating MST/sludge. MST/sludge particles are larger than .1-micron diameter.
Batch size after all additions is 28,746 gallons.

The Alpha Sorption Tank-A (TK-101) provides suitable holdup time to allow MST adsorption of the actinides and strontium (Sr) to occur. Hold up time for full adsorption in single strike mode is 12 hours. The DF for strontium is 20. Total processing time is 21.6 hours.

In the dark cells, we use air pulse agitators for tank mixing. There are no moving parts in the dark cells.

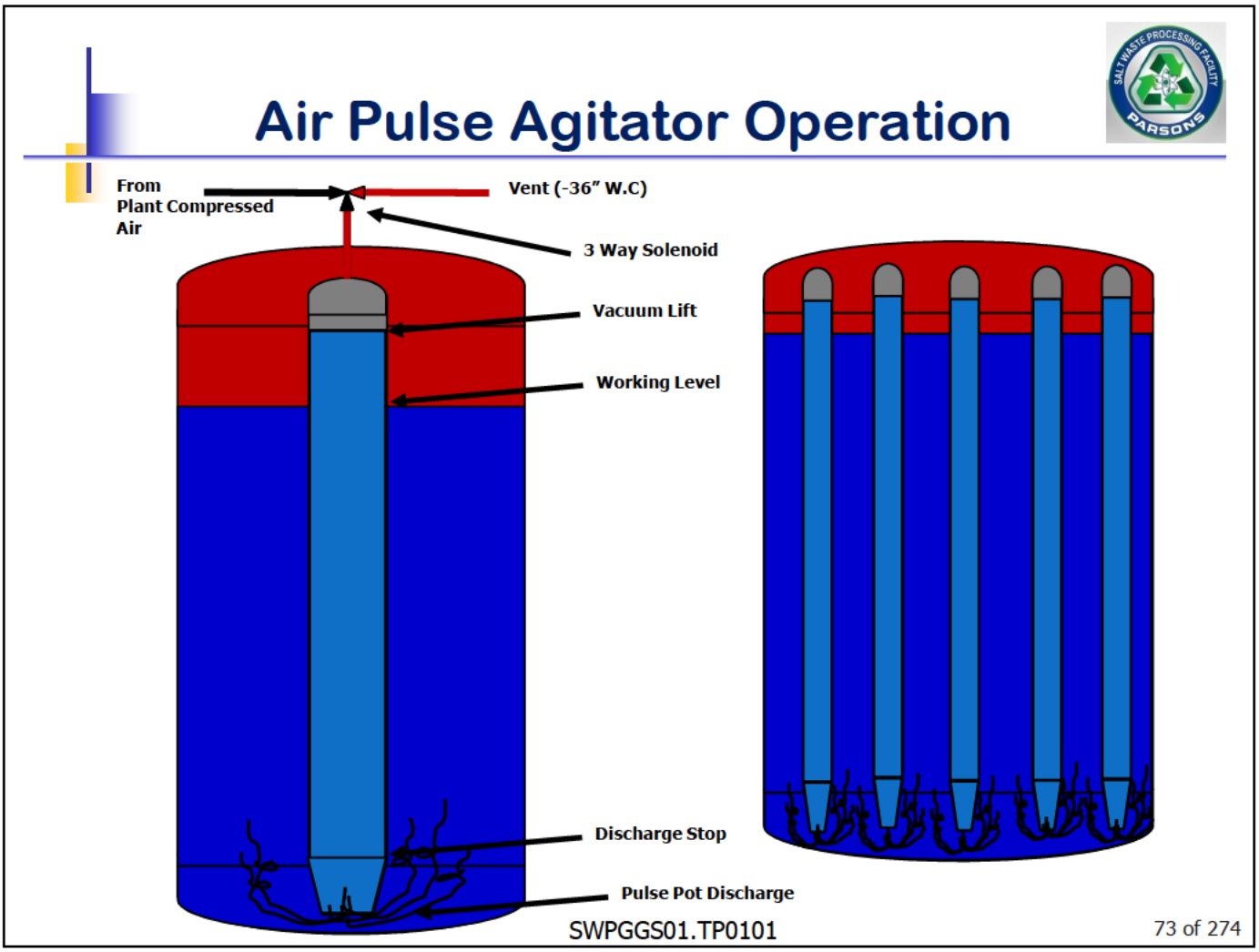

This representation of Air Pulse Agitator operation is based on tank fluid levels at a height that allows normal operation.

A second mode of operation is the lift and drop where compressed air is not applied to the pulse pot allowing the fluid in the pot to just "drop." This mode is used when the compressed air has more force than the fluid level in the tank can hold in the pulse pot, thus causing "air sparging."

Tanks with APAs are:

<u>In Alpha Strike</u>

AST-A, TK-101
FFT-A, TK-102
SSRT, TK-104
WWHT, TK-105

<u>In CSSX</u>

SSFT, TK-109

Central Process Area

100′ Elevation (Ground Level)

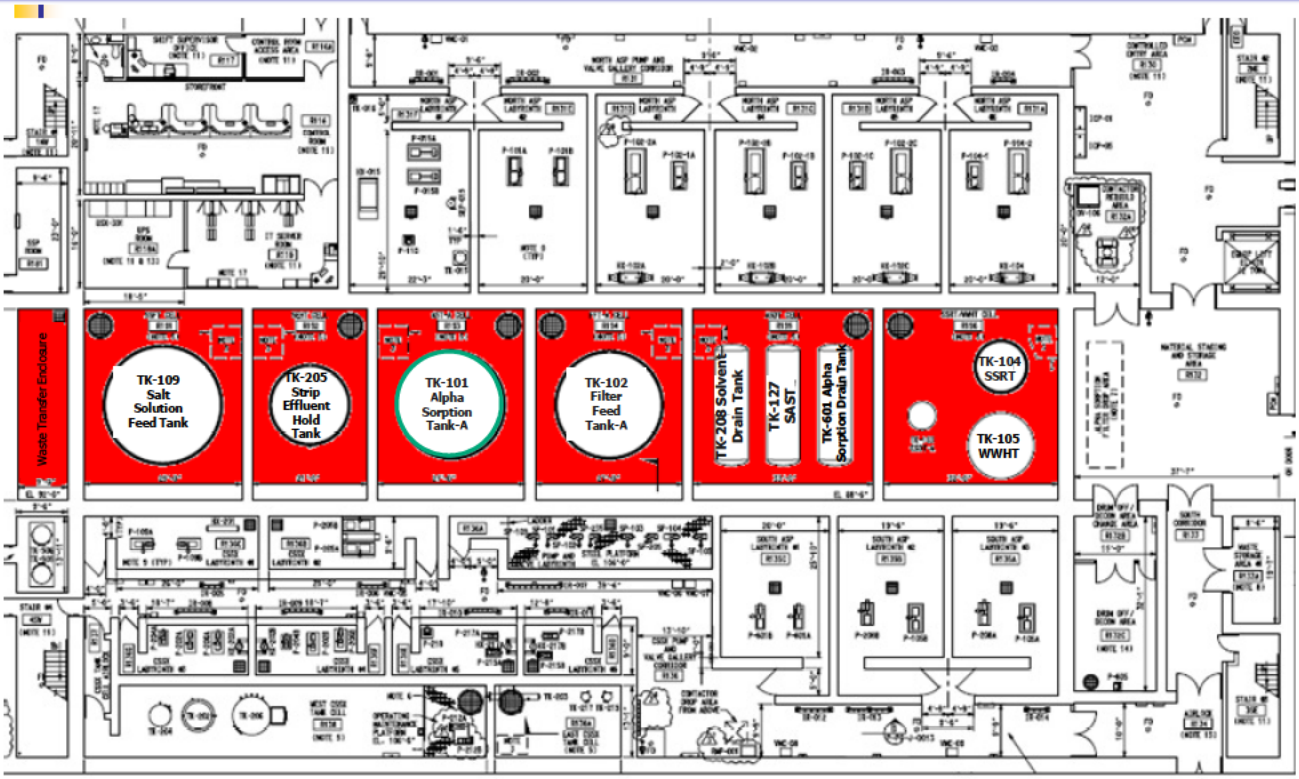

SWPGGS01.TP0101

74 of 274

Dark cells are areas where there is the highest possibility of contamination. Personnel will not ever access these areas

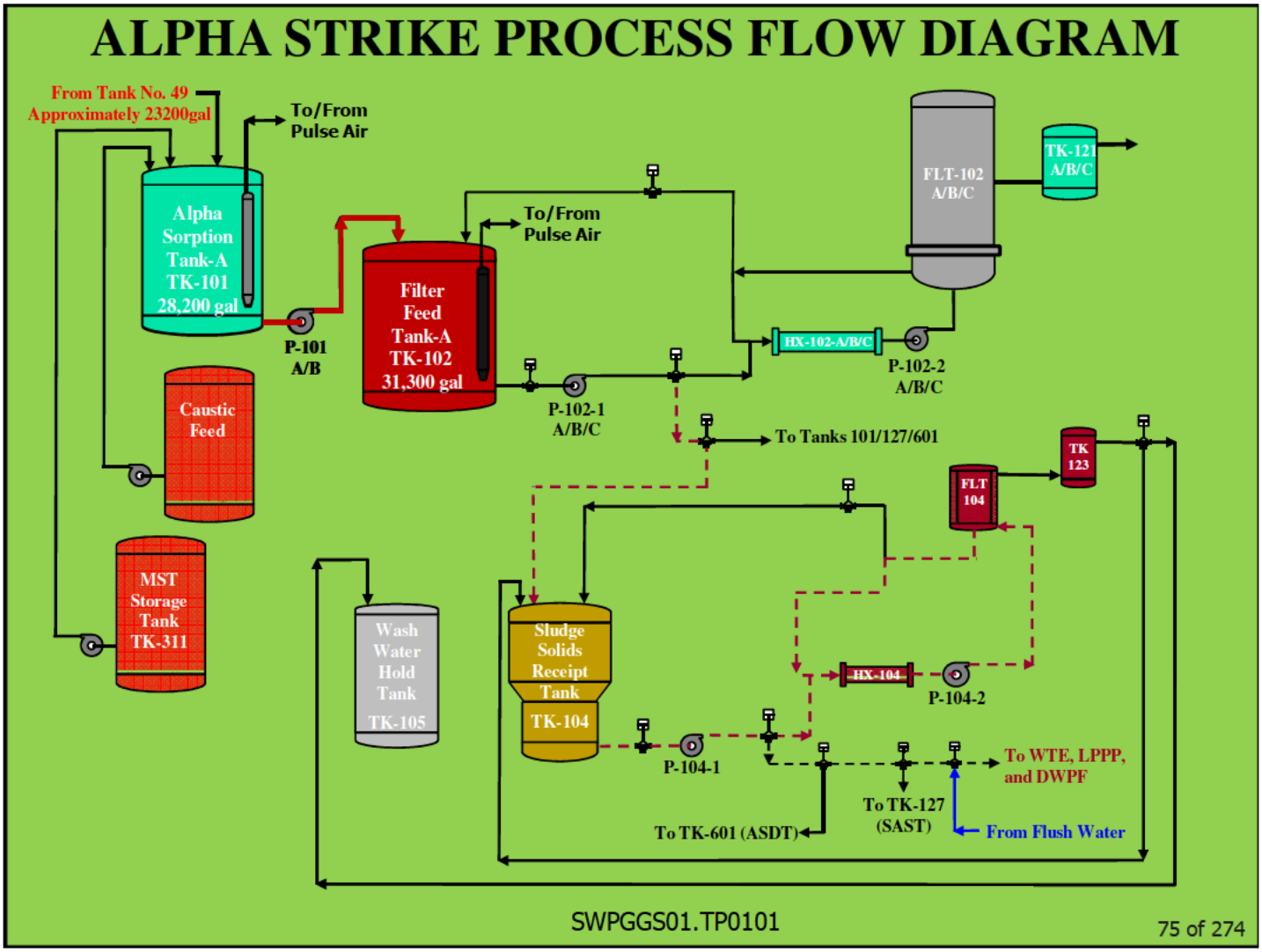

After processing in the Alpha Sorption Tank-A, salt waste is transferred to the Filter Feed Tank-A (TK-102) to begin the filtration process.

Central Process Area

100′ Elevation (Ground Level)

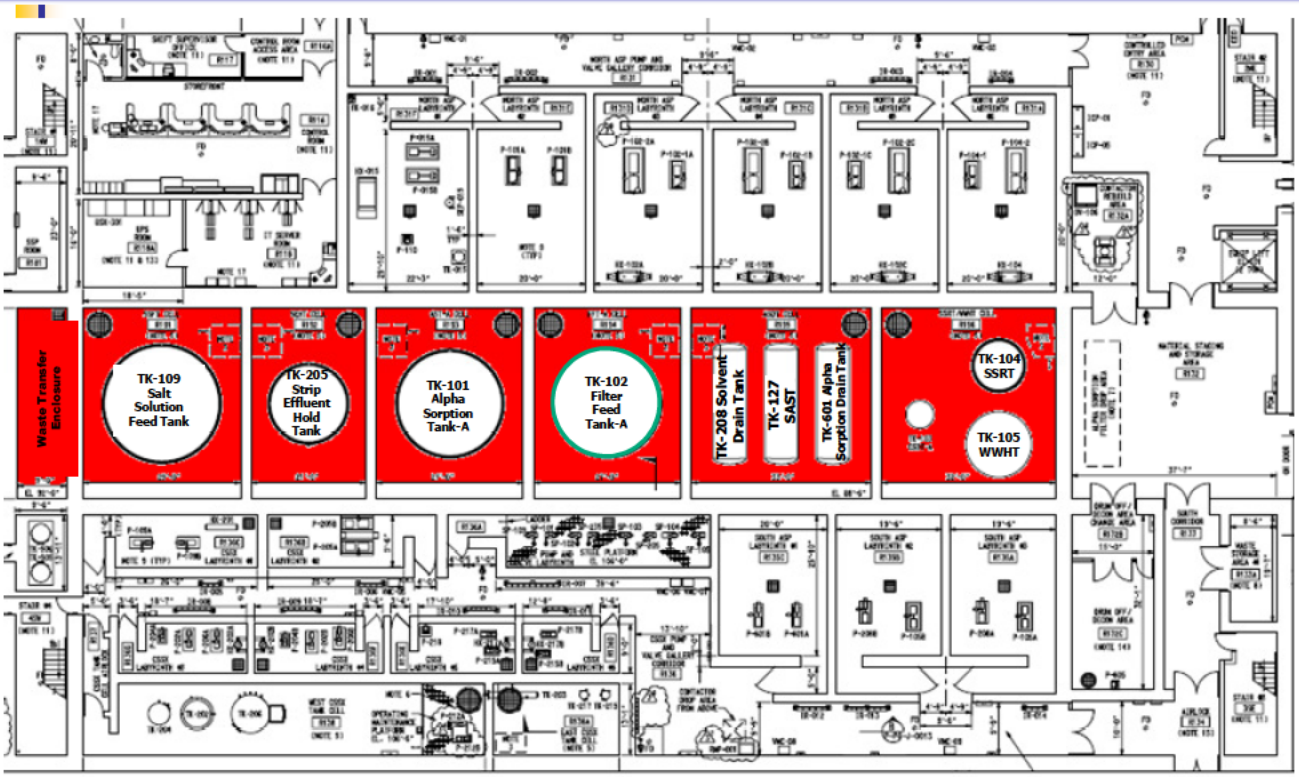

SWPGGS01.TP0101

76 of 274

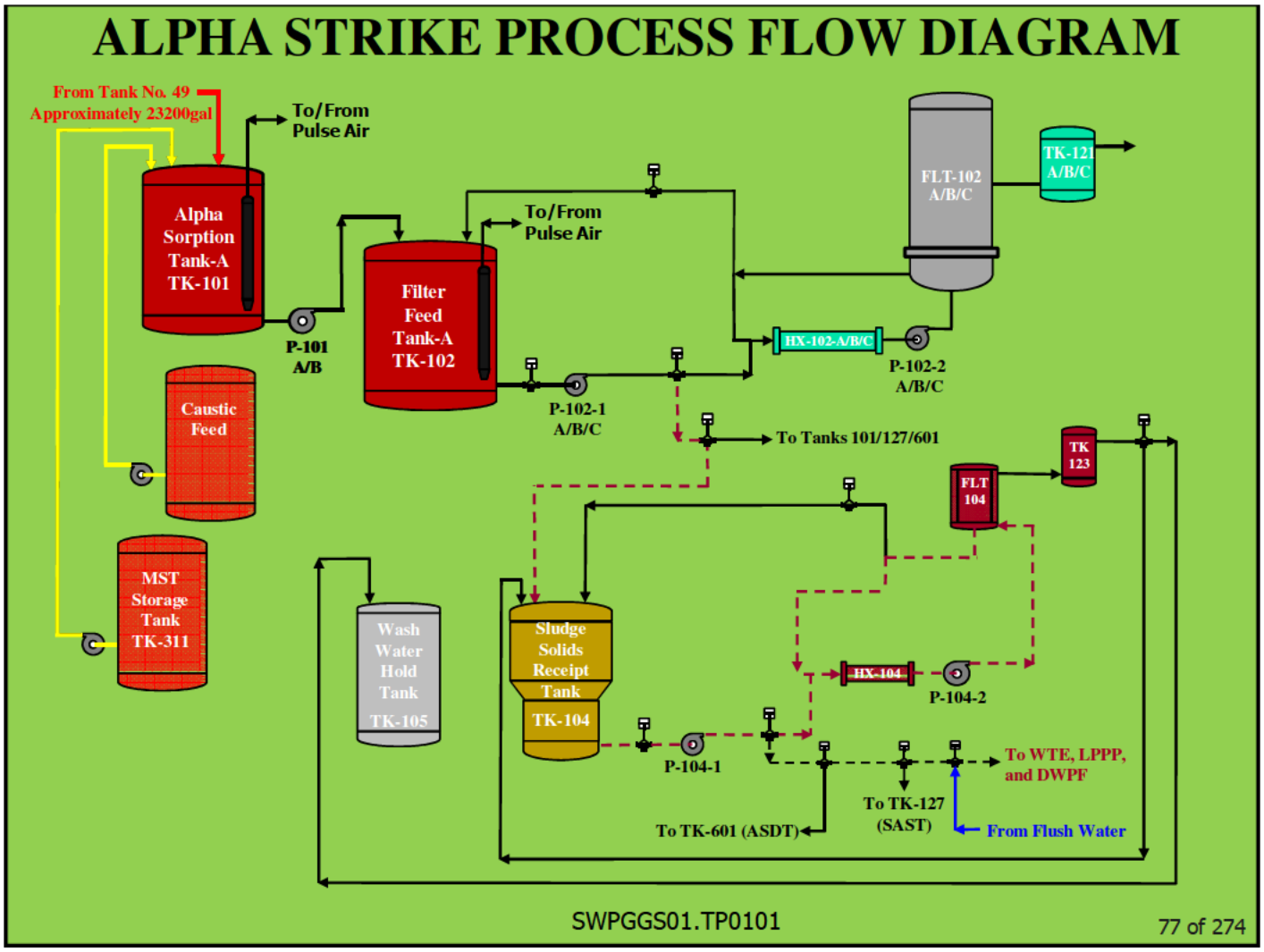

Alpha Sorption Tank-A (TK-102) is refilled and treated at the same time as the previous batch is being filtered through 2 of 3 Cross Flow filter circuits.

HOW A CROSS FLOW FILTER WORKS
ALPHA SORPTION FILTER CUT-AWAY SKETCH

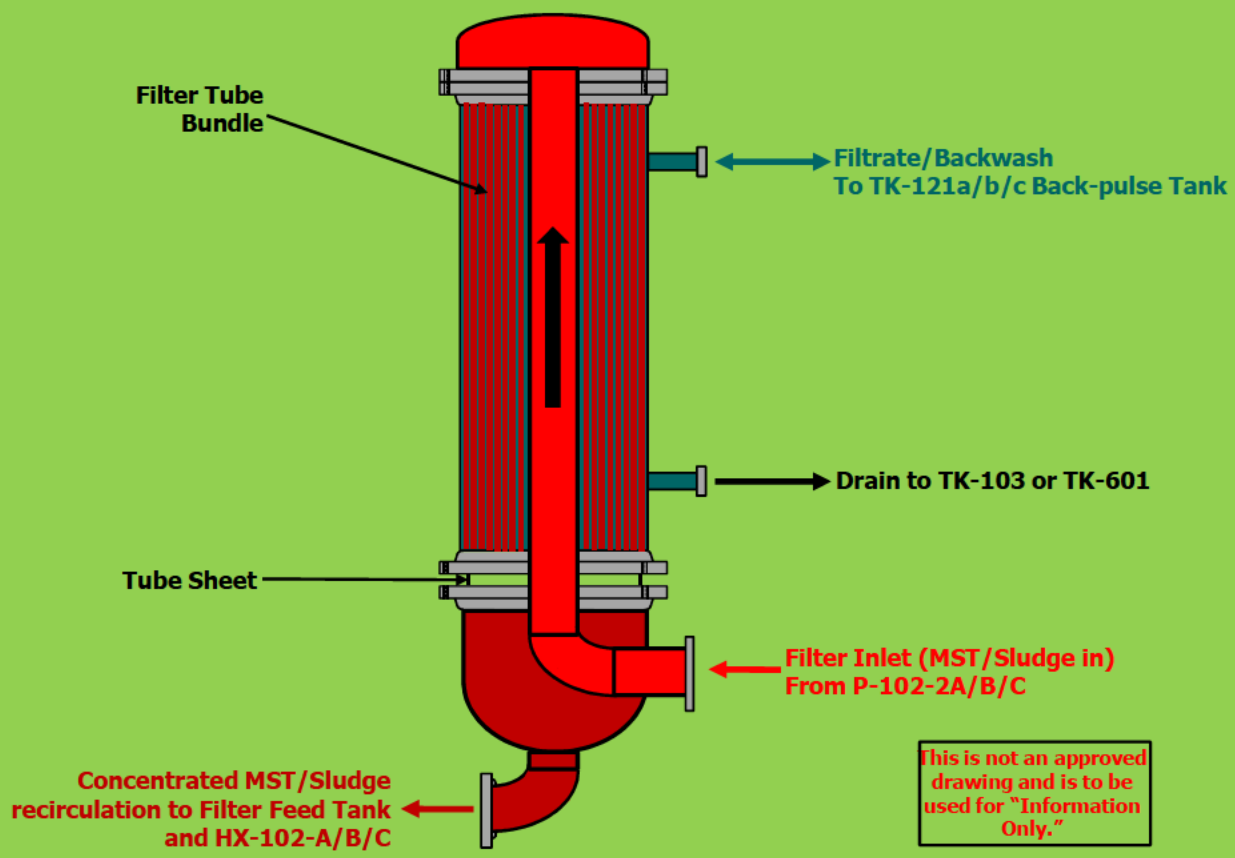

This is not an approved drawing and is to be used for "Information Only."

SWPGGS01.TP0101

SWPF CROSS FLOW FILTER

SWPGGS01.TP0101

79 of 274

A little information about cross-flow filters.

The left picture shows the lower end of the filter.
The actinide/strontium laden MST sludge flows up through the center tube, enters the top and exits down through the small filter tubes.

The small tubes are the filters and have a pore size of approximately .1 micron.
(1 micron equals 1 millionth of a meter)

SWPF CROSS FLOW FILTER

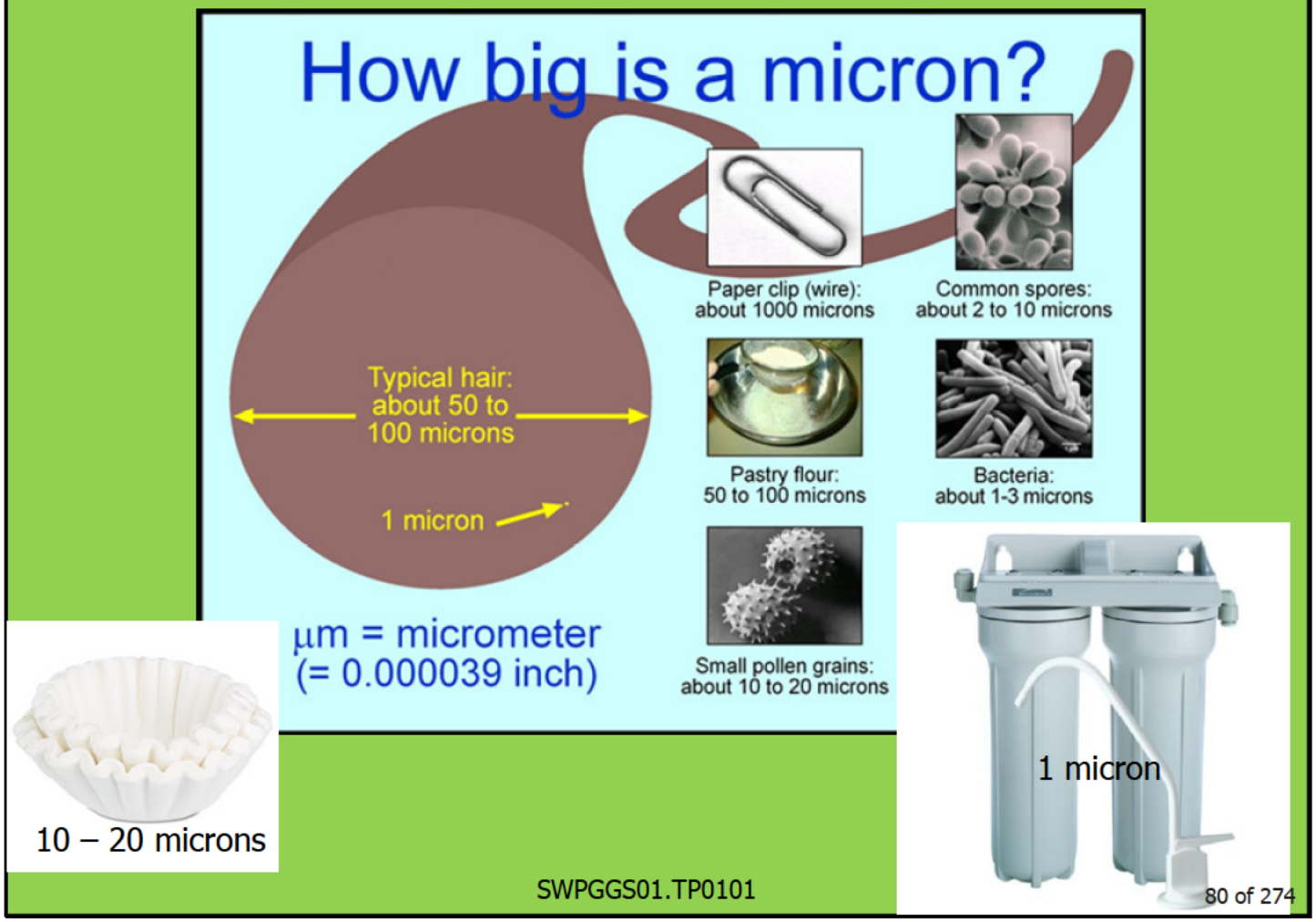

What is a micron

For comparison, the average human hair is about 50 – 100 microns

A coffee filter is typically 10 – 20 microns.

A good water filter is 1 – 10 microns with 5 microns being typical.
The pores in the filter tubes are 0.1 – micron diameter.

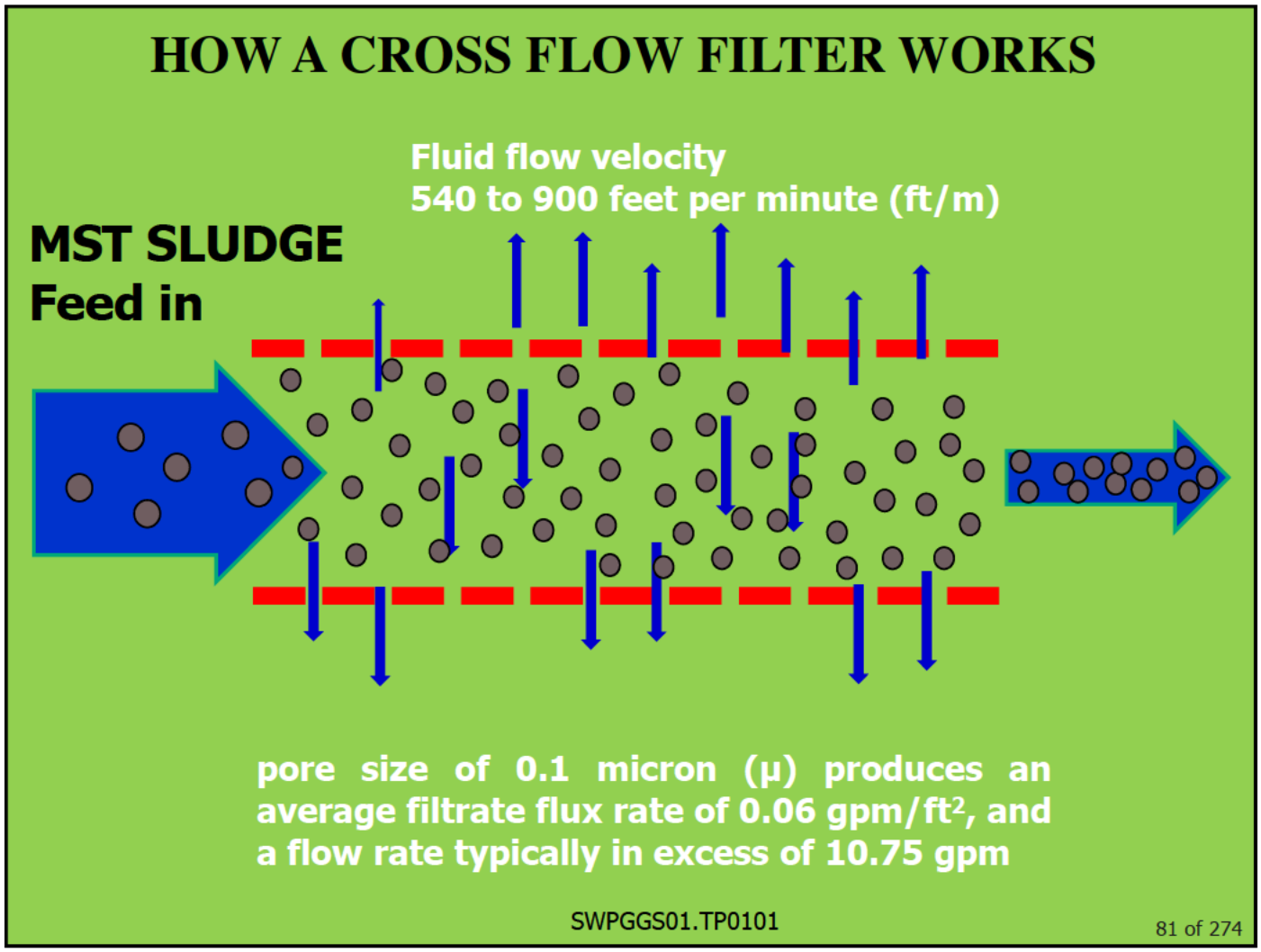

How a Cross Flow Filter works

Here is a demonstration of how the filter tubes work in a Cross-flow Filter.
Liquid waste with MST/Sludge enters the tubes with a fluid velocity of 540 to 900 feet per minute (ft/m).

Water, sodium, and cesium molecules are in solution and are small enough to pass through the .1-micron diameter pores. The average MST/sludge particle is > 0.1 micron and too large to pass through the pores so they continue to flow through the filter circuit.

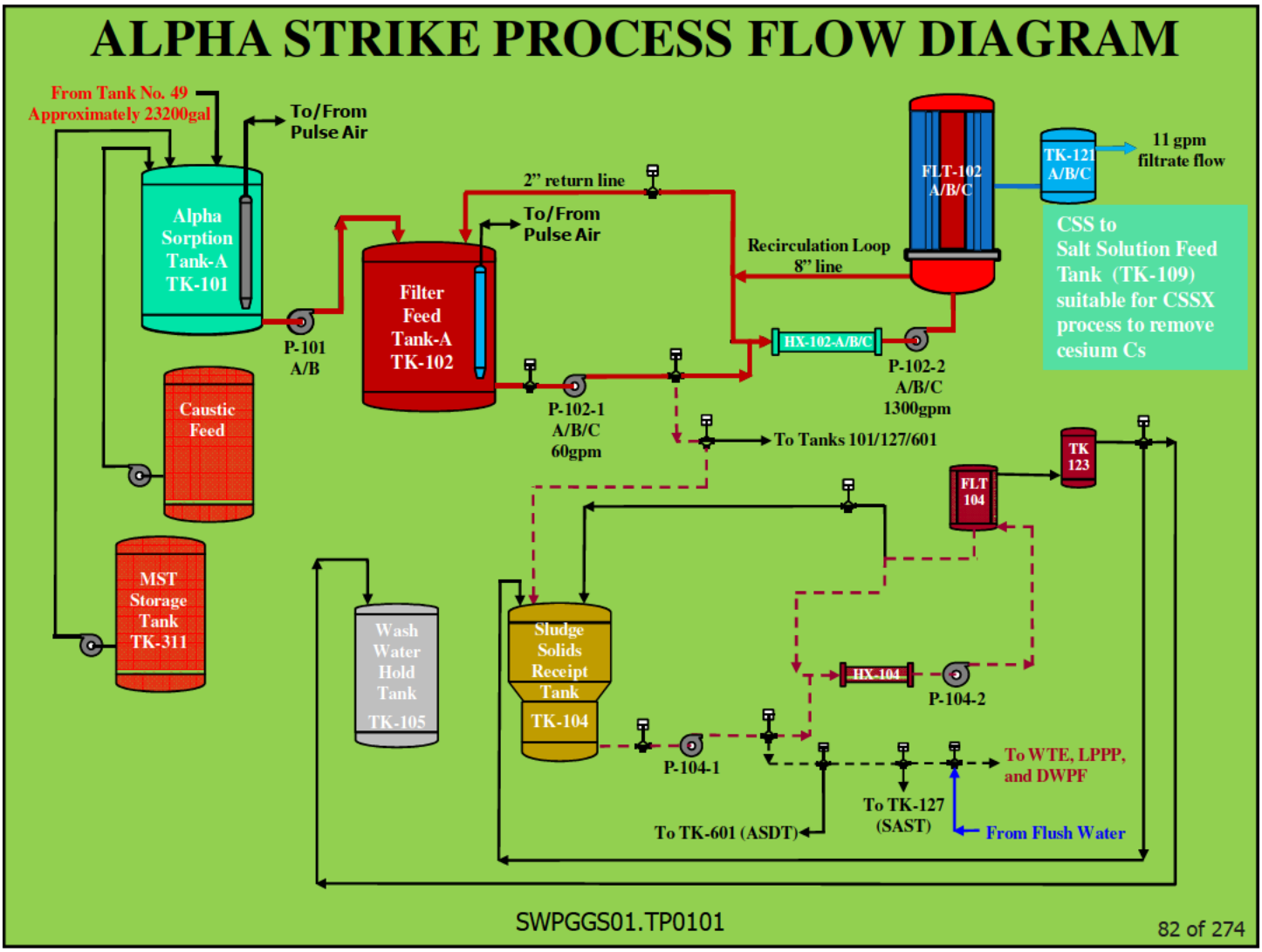

Heat exchanger HX-102 maintains temperature at 73°F during filtration.
Filtration will reduced a batch size in the Filter Feed Tank-A (TK-102) from 28,746 gallons to a concentrated sludge of 5 wt% and 2,800 gallons in approximately 19 hours.

The permeate or clarified salt solution (CSS) with the soluble, radioactive cesium-137, will be directed to the Clarified Salt Solution Feed Tank (TK-109) for the caustic-side solvent extraction process.

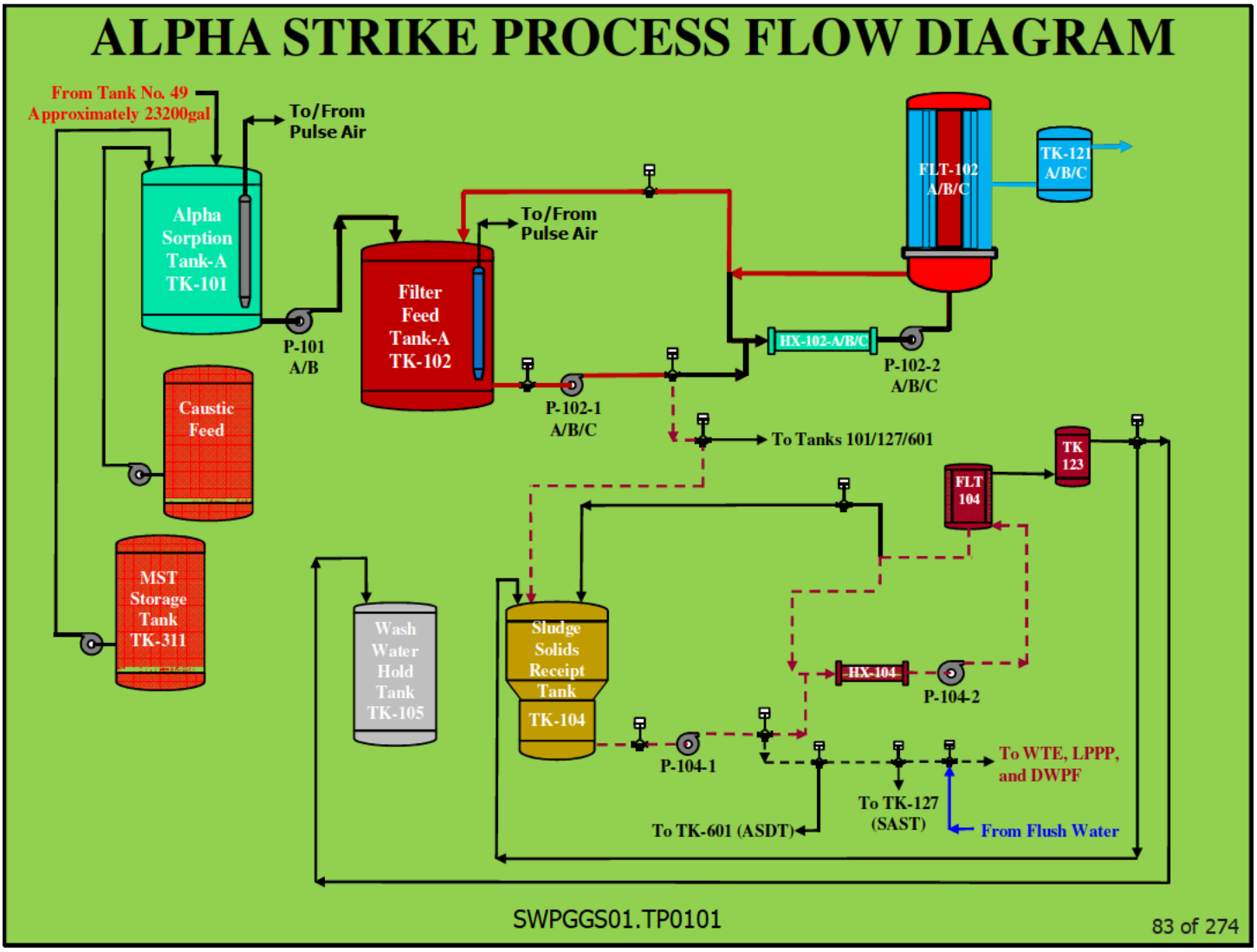

The AST-A (TK-101) continues to feed the FFT until seven batches have been filtered and concentrated to produce a final target solids concentration of approximated 5 to 7 wt%.

Once seven batches have been filtered and the final solids concentration target is achieved, the filter circuit is stopped.

Filtration reduces each of the seven batches combined to 2800 gallons.

Cross Flow Filter Location

116′ Elevation

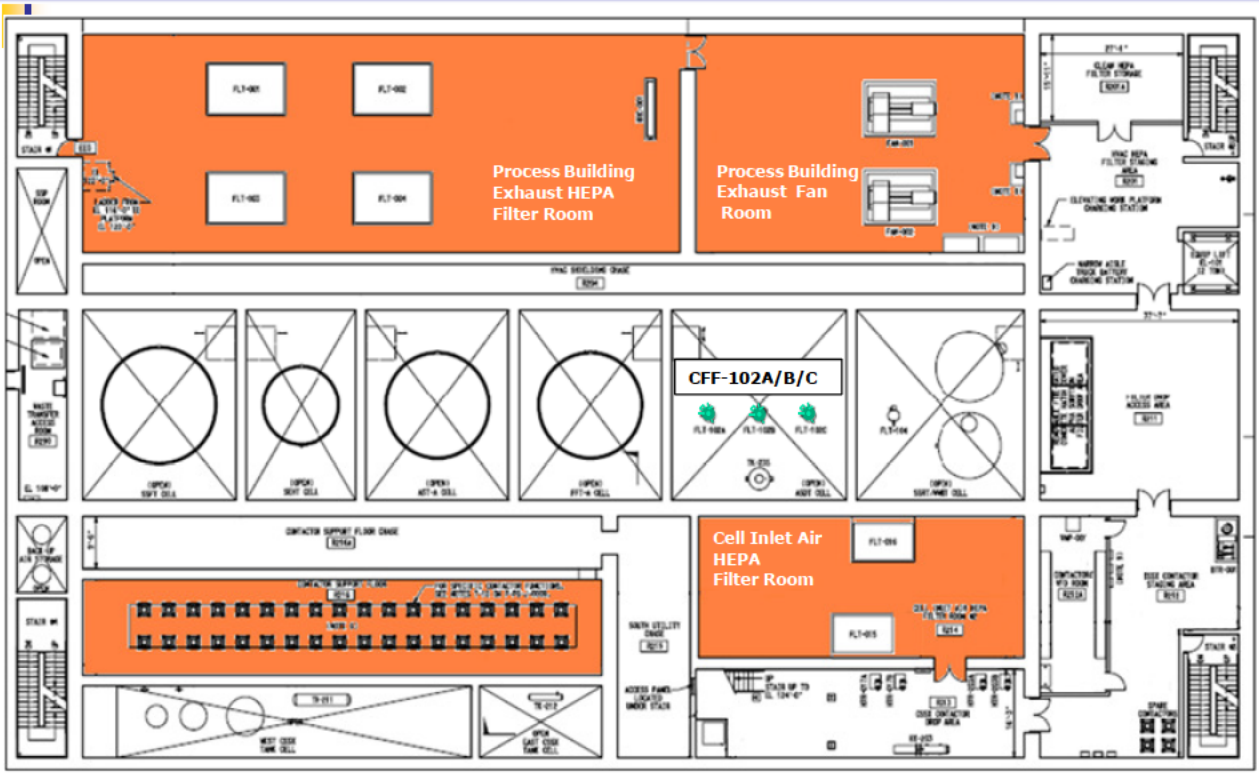

SWPGGS01.TP0101

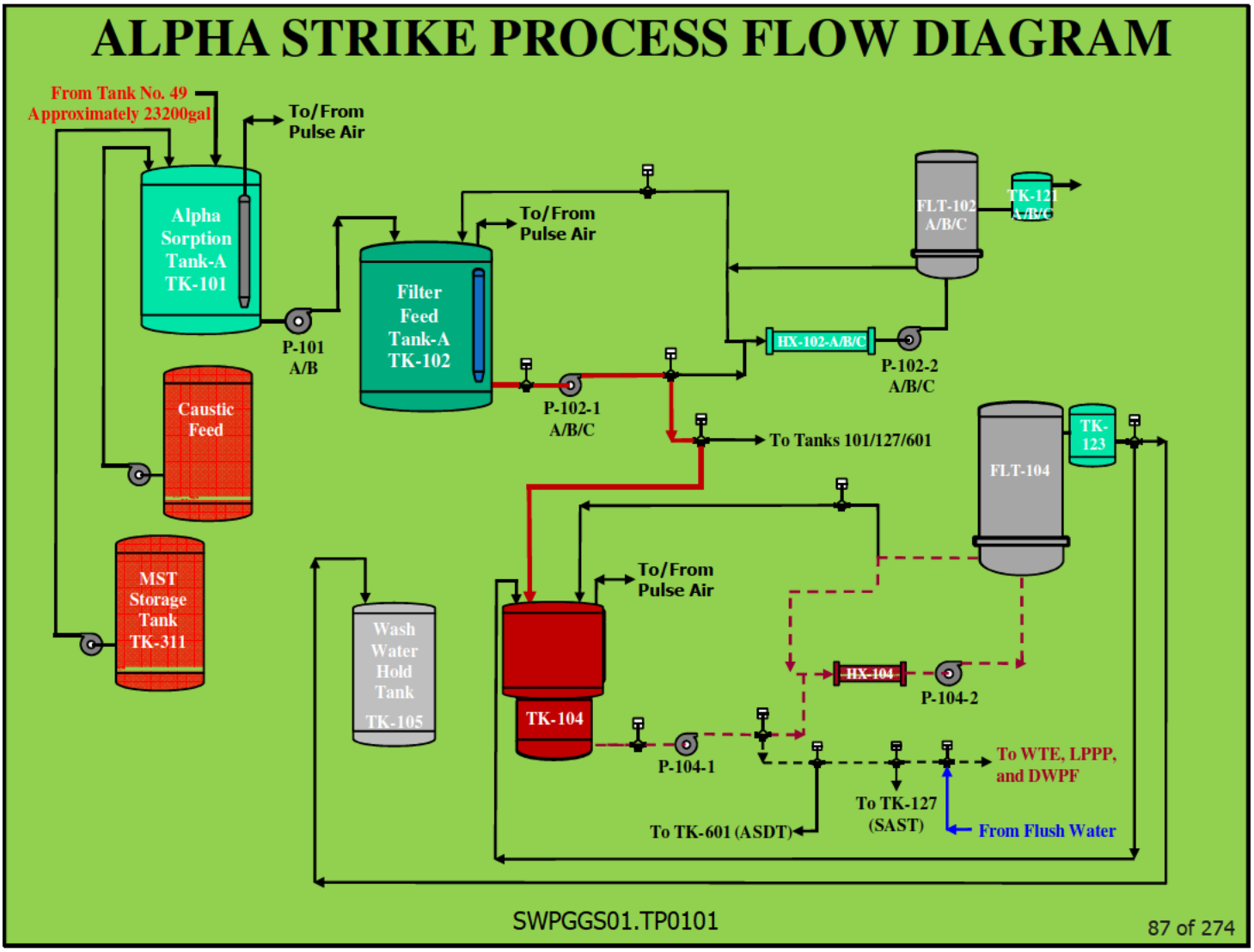

This 2800 gallons of sludge is transferred to the Sludge Solids Receipt Tank (TK-104) for sludge wash.

Sludge wash is a second filtration process identical to the filtration process mentioned earlier.

It is used to reduce the sludge sodium content from 5.6 molar to .5 molar to meet DWPF waste acceptance criteria.

There is only one filter circuit for sludge wash.

Notice: The tank is designed with a narrow lower section and a wide upper section. This design is to allow effective mixing while providing sufficient vapor space to prevent the tank from approaching to the tank Lower Flammability Limit (LFL) following a loss of agitation.

Central Process Area

100' Elevation (Ground Level)

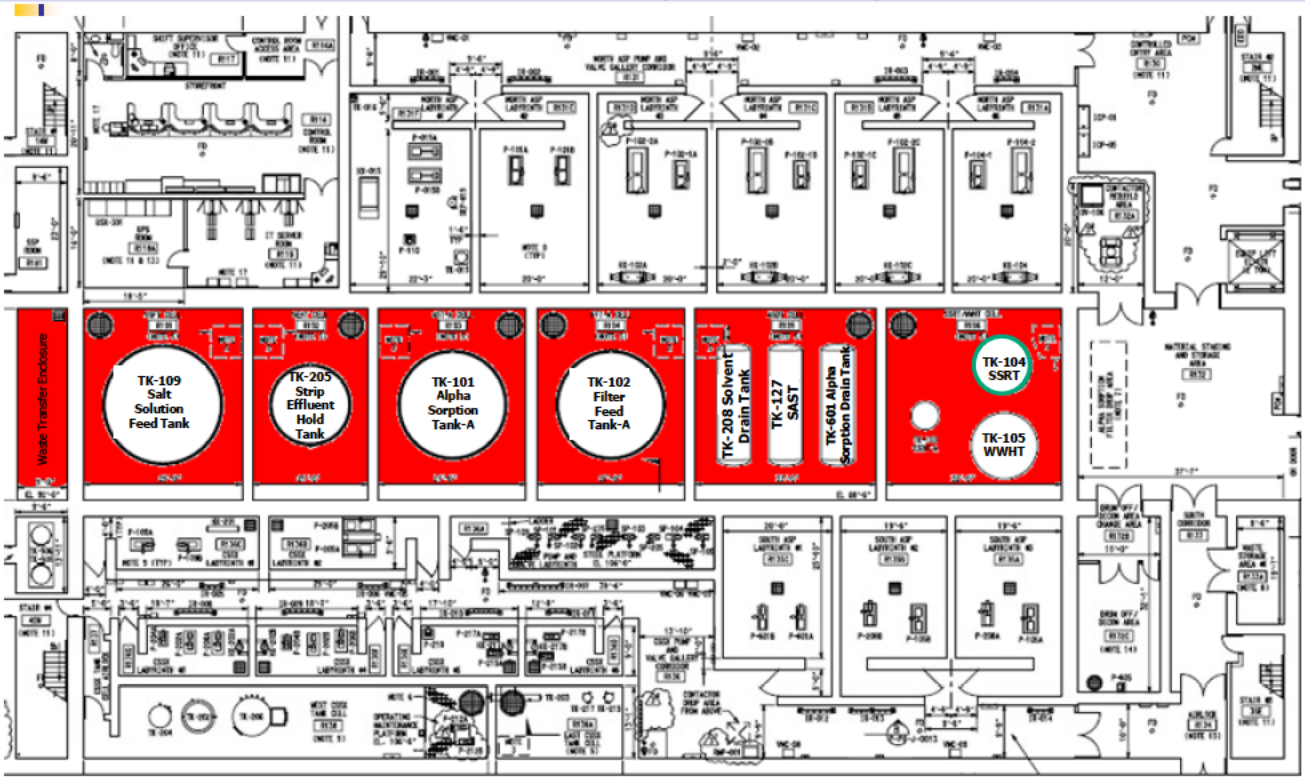

SWPGGS01.TP0101

86 of 274

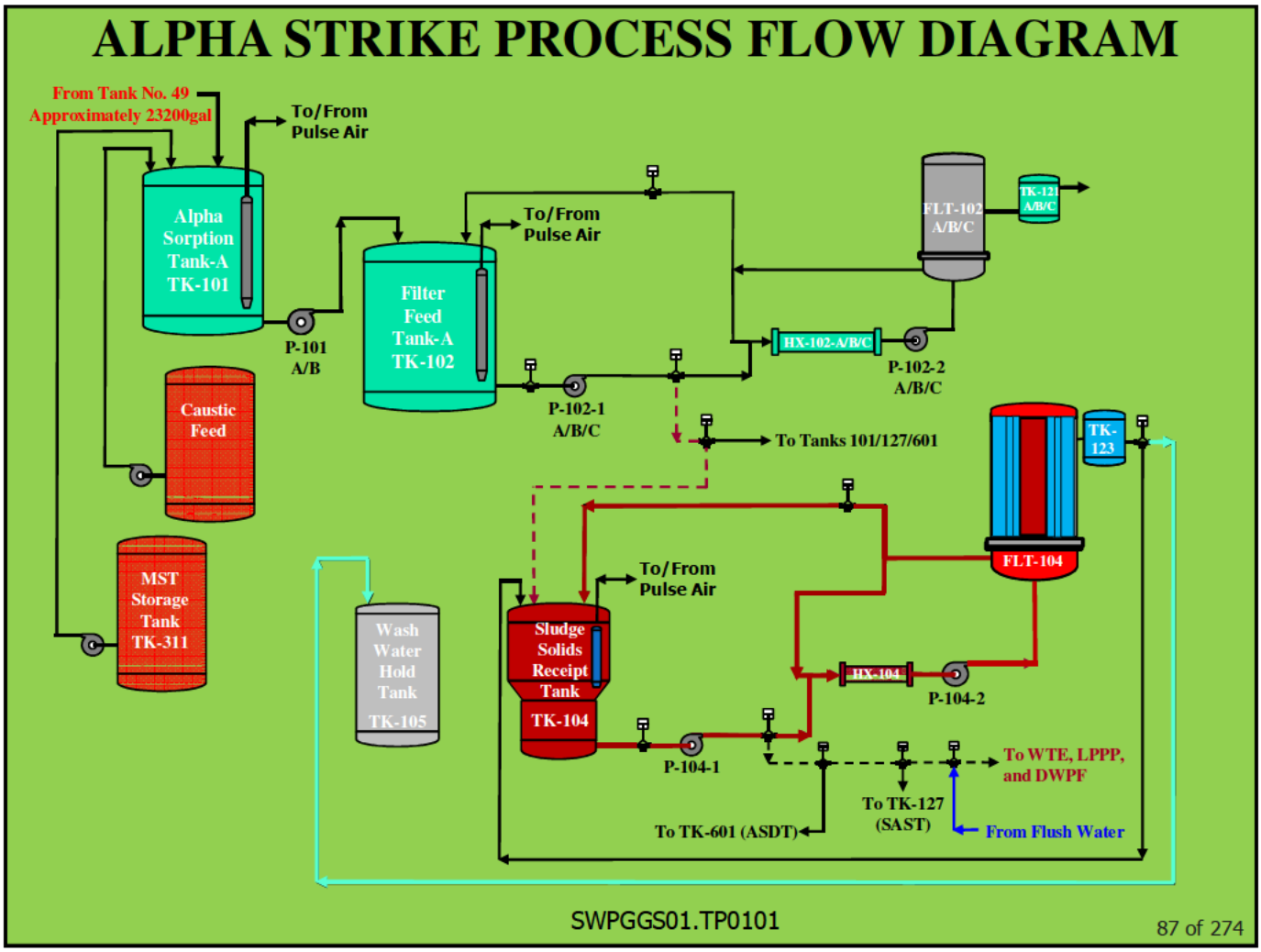

The Wash Filter also has a pore diameter of 0.1 micron (μ) and produces an average filtrate flux rate of 0.06 gpm/ft^2, and a flow rate typically exceeding 10.75 gpm.

In order to minimize additional waste generated by SWPF operations, wash water is returned to AST-A (TK-101) as part of the MST slurry batch makeup process.

Cross Flow Filter FLT-104

116′ Elevation

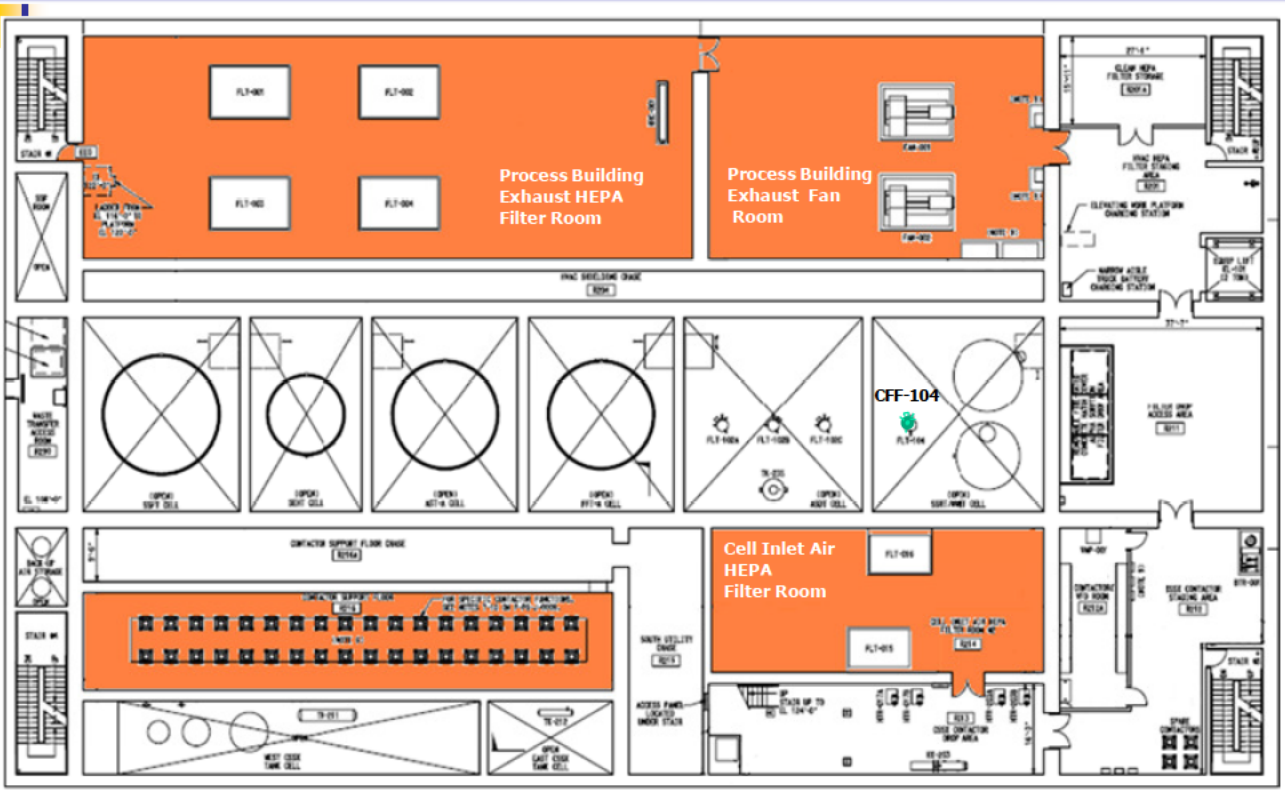

SWPGGS01.TP0101

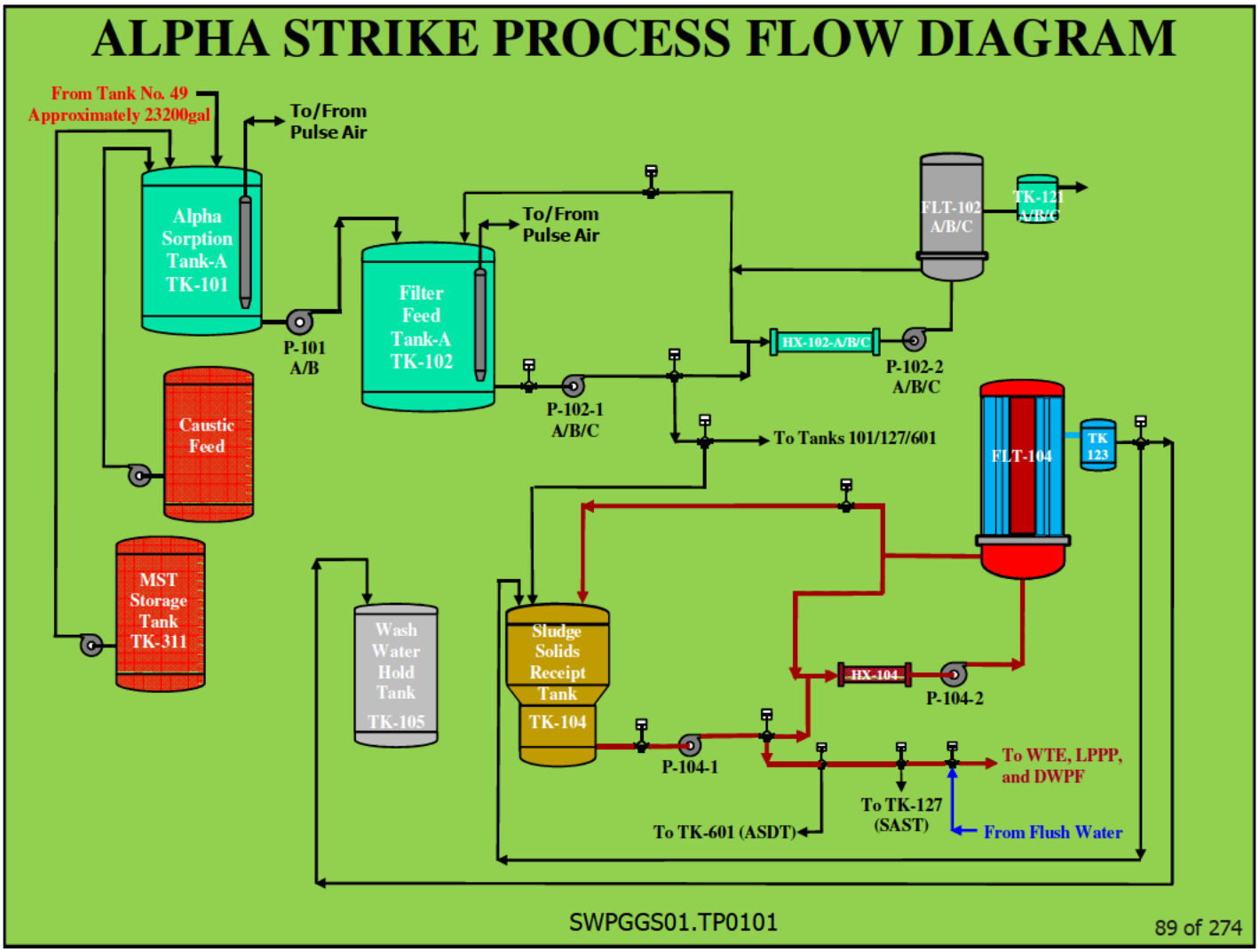

Transfer to DWPF

At this point MST/sludge is tested to be compliant with Defense Waste Processing Facility Waste Acceptance Criteria and suitable for transfer.

SWPF will transfer a batch of MST/sludge to the Defense Waste Processing Facility about once per week.

SRS Tank Waste System

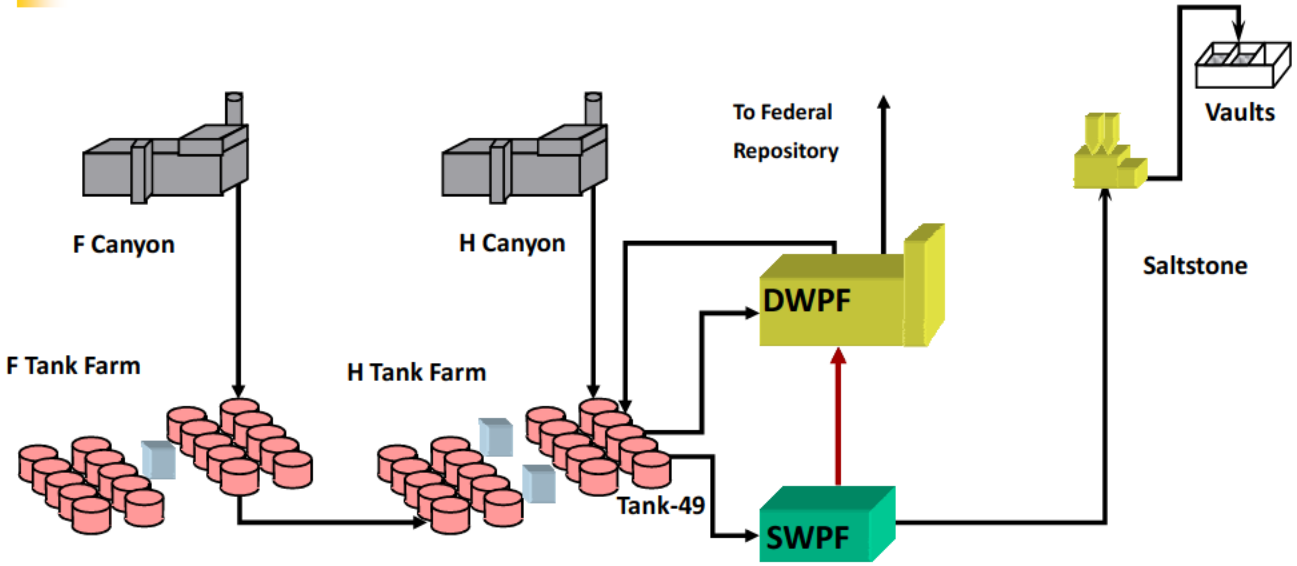

DWPF - Defense Waste Processing Facility-Hi Activity Vitrification
SWPF - Salt Waste Processing Facility- Separation of Activity
Saltstone- Low Activity Disposal in Grout

SWPGGS01.TP0101

90 of 274

MST/Sludge transferred to DWPF

ALPHA STRIKE PROCESS CONCLUSION

- Alpha Strike Process receives salt solution from Tank 49 and mixes with wash water, caustic and monosodium titanate (MST)
- Provides filtration to separate strontium (Sr), actinide radionuclides, monosodium titanate (MST) and sludge suitable for processing at DWPF
- Produces clarified salt solution to be processed within the Caustic Side Solvent Extraction (CSSX) System

SWPGGS01.TP0101

91 of 274

The ASP occurs first and is used to separate Sr/actinides from the waste feed received from F and H Tank Farm using MST adsorption and filtration.

A highly concentrated, low volume of strontium/actinide laden MST/Sludge is sent to DWPF for vitrification.

A high volume of Clarified Salt Solution suitable for processing through the Caustic Side Solvent Extraction Process is now staged for cesium extraction.

Salt Waste Processing Facility
Module 4

Caustic Side Solvent Extraction Process Overview

SWPF PROCESS OVERVIEW

Waste processing occurs in three basic unit operations:

- Alpha Strike Process (ASP)
- Caustic Side Solvent Extraction (CSSX)
- Alpha Finishing Process (AFP)

OBJECTIVES

By the end of this training session you should be able to:

1. State the purpose of the CSSX process.
2. Describe the sequence of operation in the CSSX Process and the desired outcome of each step
3. Describe the basic CSSX process and flow path
4. Name the major components of the CSSX process and tell where they are located
5. State the outputs of the CSSX process.

Caustic Side Solvent Extraction PURPOSE

The purpose of CSSX is to:

- Remove cesium (Cs) from the Clarified Salt Solution
  - Concentrated Cs waste stream suitable (meets WAC limits) for transfer to Defense Waste Processing Facility (DWPF)
  - Decontaminated Salt Solution (DSS) suitable (meets WAC limits) for transfer to the Saltstone Production Facility (SPF)

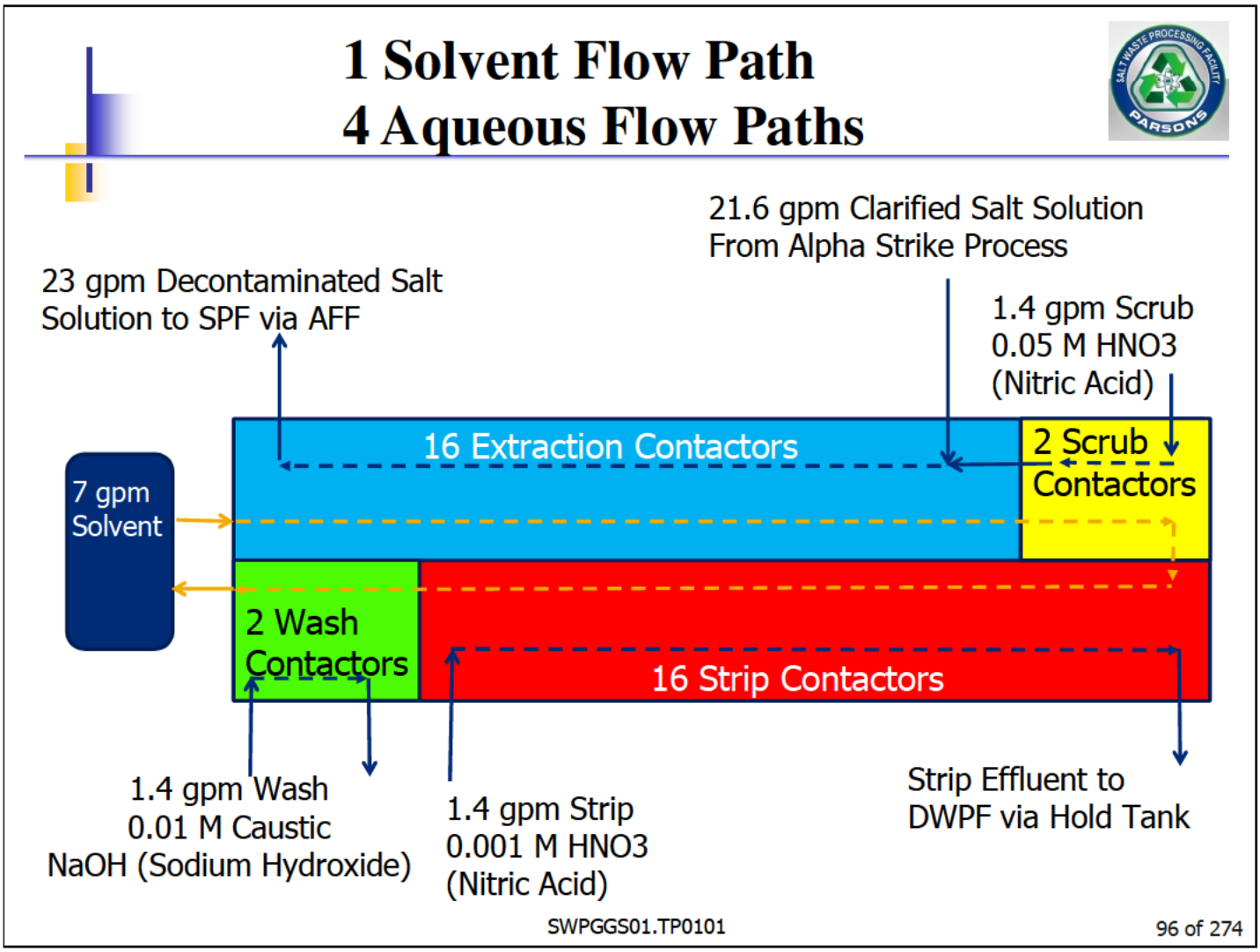

CSSX Flow Paths:

There are five separate chemical flow paths, 1 solvent, and 4 aqueous flow paths.

We will cover the solvent flow to the Cesium Extraction stage first.

Solvent Flow Path

- Cesium Extraction: The BoBCalixC6 extractant (solvent) Decontaminates the salt solution by removing cesium

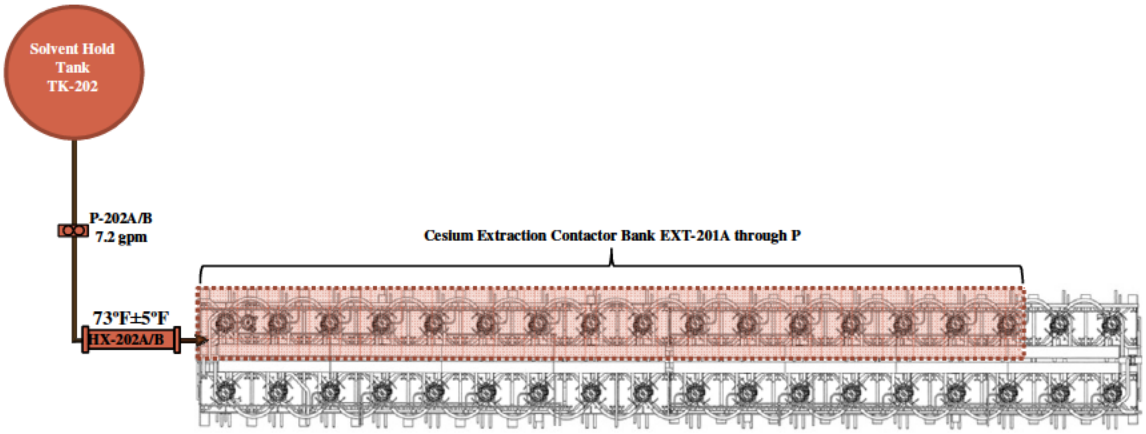

SWPGGS01.TP0101

97 of 274

Purpose of cesium extraction

To transfer cesium from the Clarified Salt Solution (aqueous) to the Solvent (organic) by mixing the CSS with the solvent then separating the now cesium laden solvent from the CSS.

The Solvent Hold Tank (TK-202) has cooling jackets on the tank to cool the solvent to 73ºF ± 5ºF.

Solvent is pumped from the Solvent Hold Tank (TK-202) through HX-202A/B where the solvent is regulated to 73ºF ± 5ºF and then into Extraction Contactor EXT-201A via pump P-202A/B at 7.2 gpm. It then passes from EXT-201A through EXT-201P.

Solvent Flow Path

- Solvent Scrub: Cesium rich solvent is "scrubbed" of unwanted impurities by 0.05M nitric acid solution that neutralizes any caustic carryover from extraction

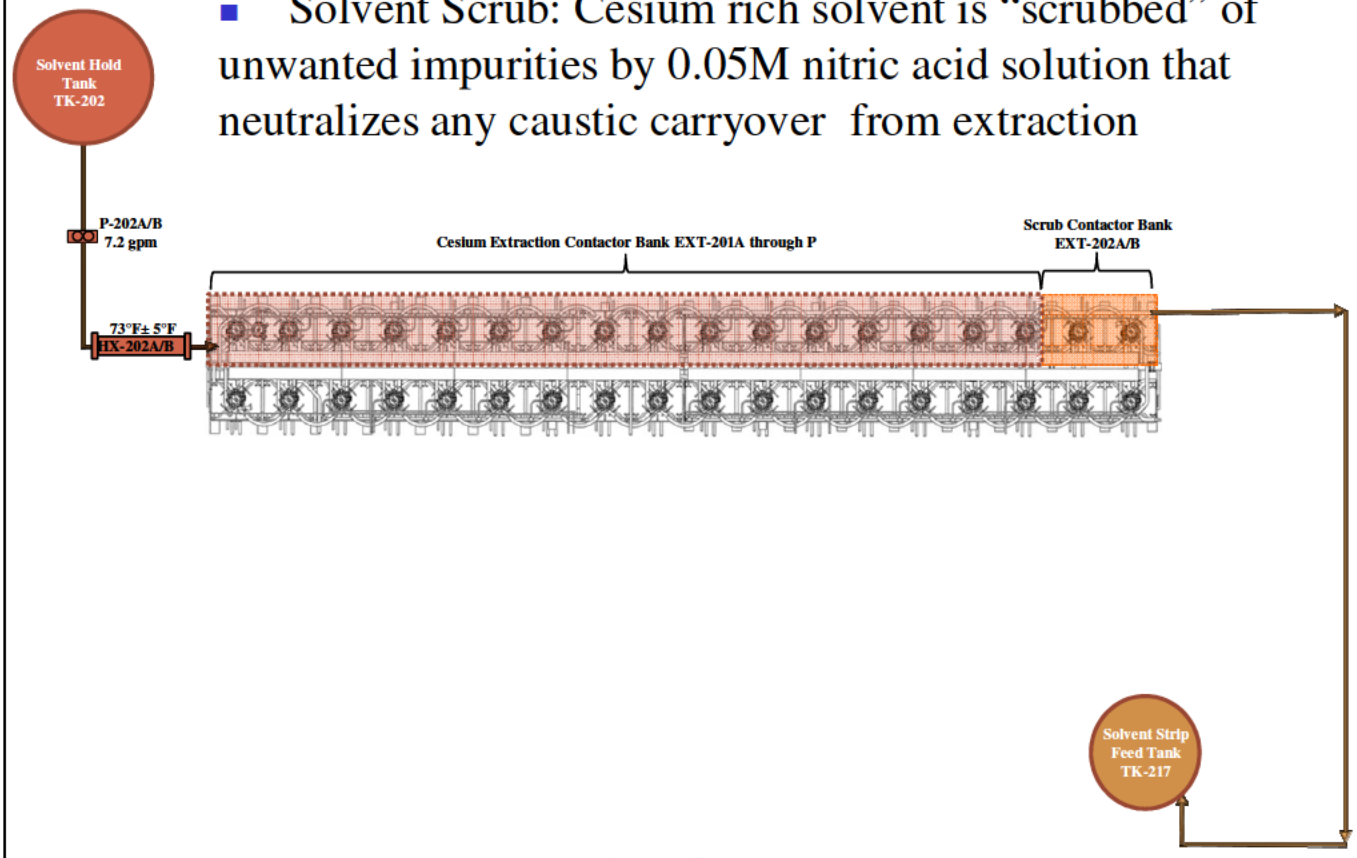

SWPGGS01.TP0101

98 of 274

Solvent then flows to the Solvent Scrub contactors to remove impurities (covered later)

Solvent flows from Extraction Contactor EXT-201P to Scrub Contactor EXT-202B then EXT-202A where it is mixed with 0.05M nitric acid. Once the solvent leaves EXT-202A if flows to the Solvent Strip Feed Tank (TK-217) where it is staged for cesium strip.

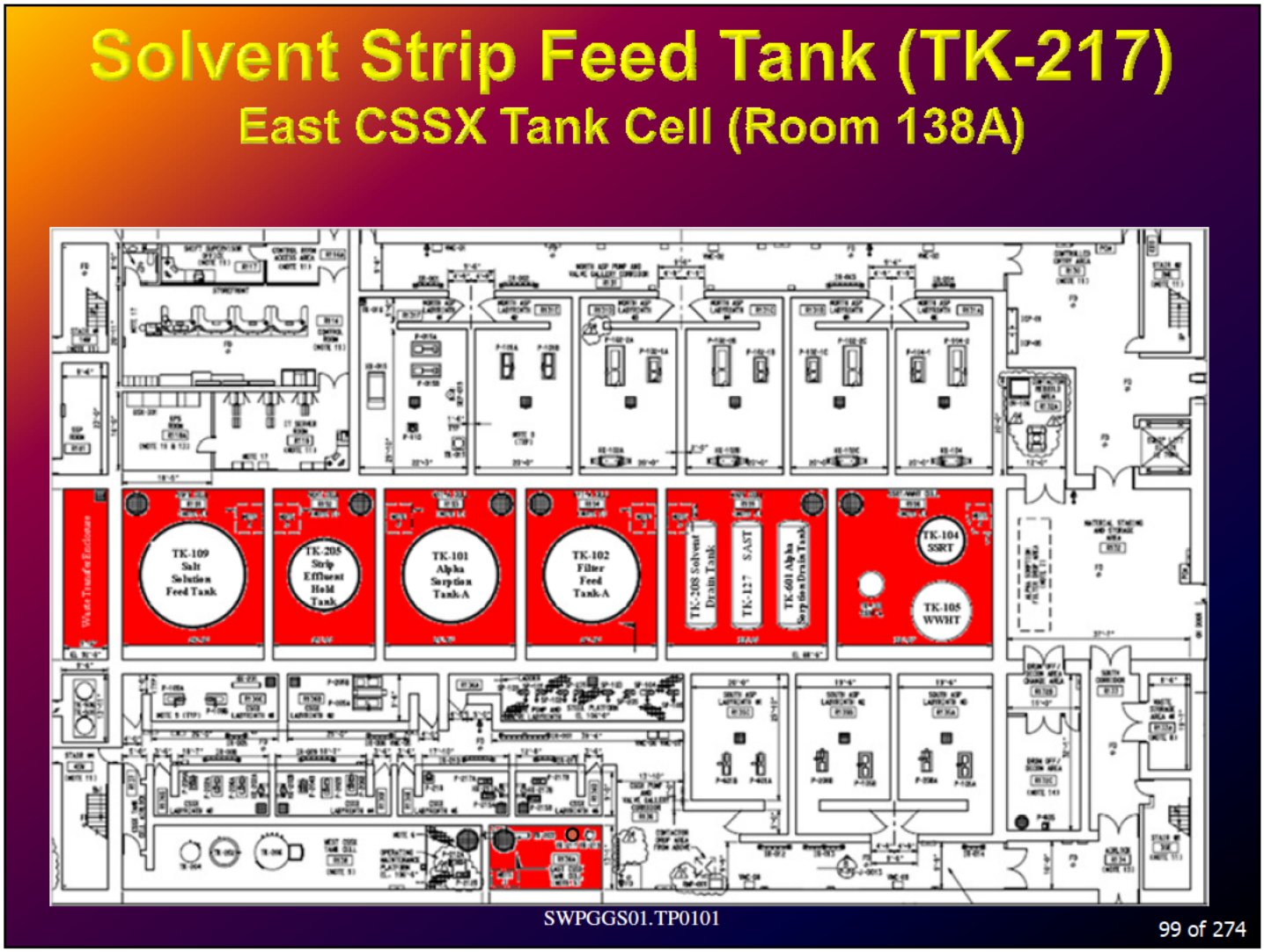

Solvent Strip Feed Tank (TK-217) Location

The Solvent Strip Feed Tank is located in the East CSSX Tank Cell (Room 138A).

Solvent Flow Path

- Cesium Strip: Cesium is "stripped" by 0.001M nitric acid solution generating strip effluent

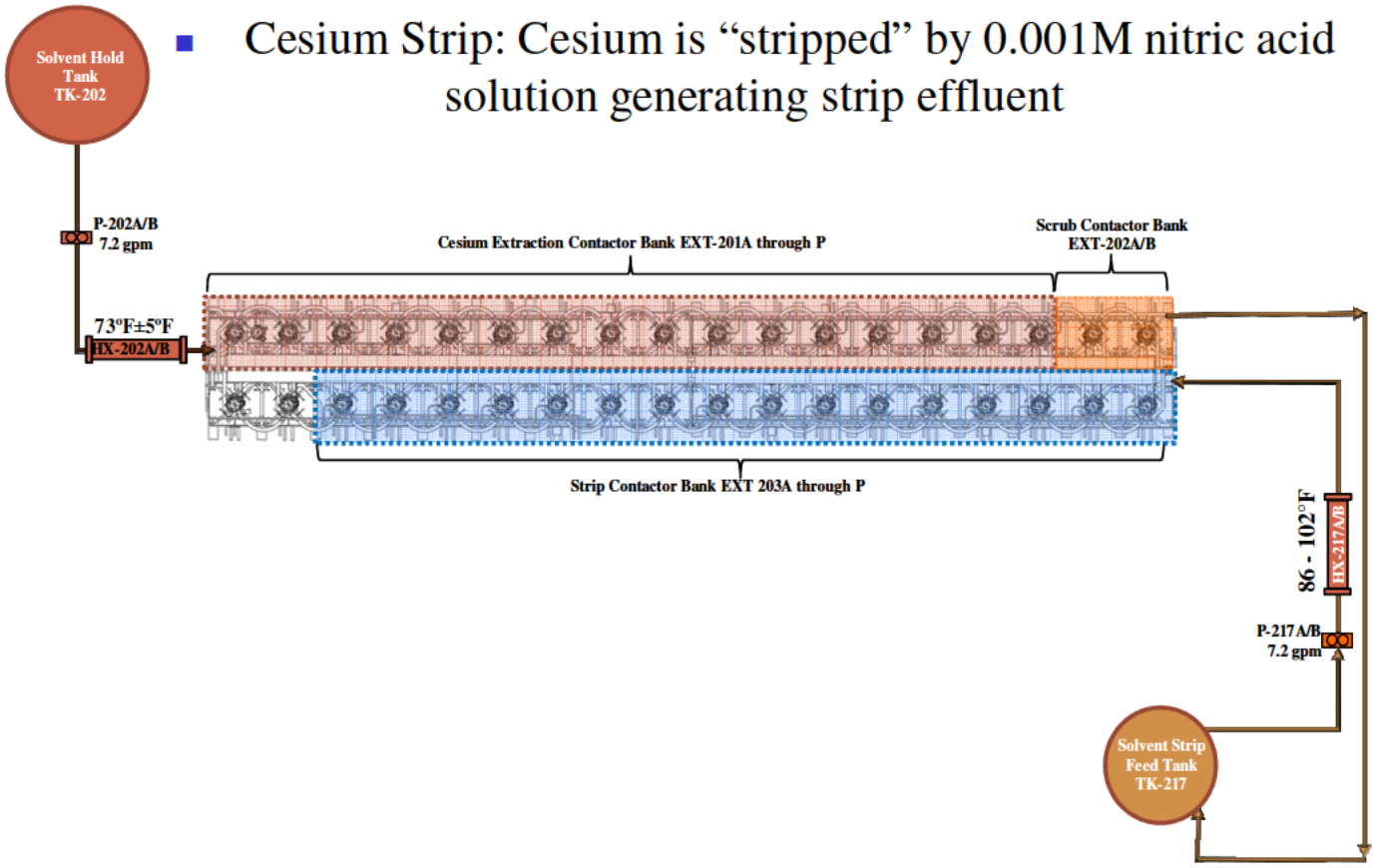

SWPGGS01.TP0101

100 of 274

The next step is Cesium Strip. Using 0.001M nitric acid cesium is stripped from the solvent.

Solvent is pumped by pump P-217A/B at 7.2 gpm from the Solvent Strip Feed Tank (TK-217) through heat exchanger (HX-217A/B) where it the temperature is regulated to 86 - 102°F then into the Strip Contactor Bank.

Solvent flows through the Strip Contactor Bank from EXT-203A to EXT-203P.

Solvent Flow Path

- Caustic Wash: Removes solvent degrading impurities and other contaminants

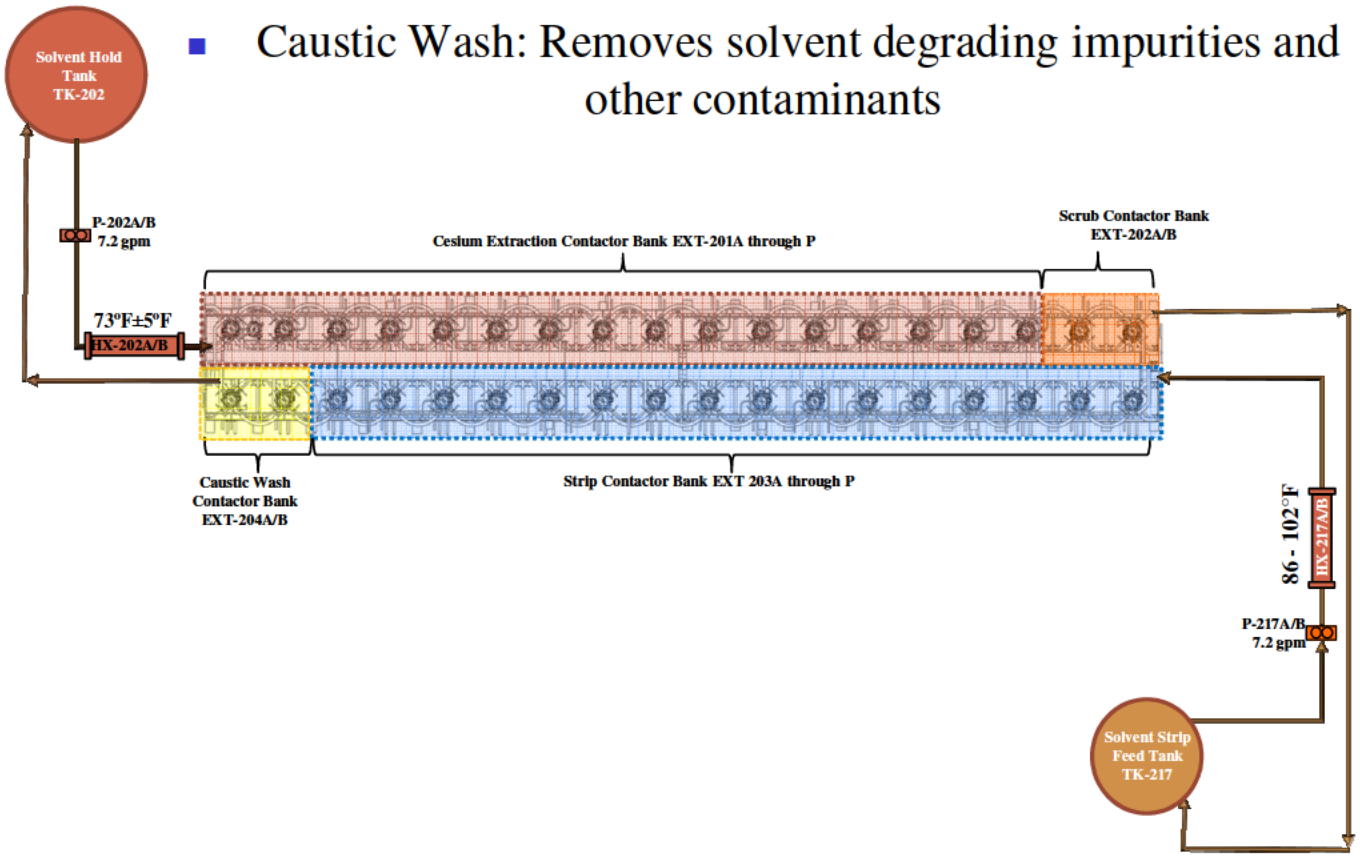

SWPGGS01.TP0101

101 of 274

Caustic Wash uses 0.01M caustic to remove solvent degrading impurities and other contaminates.

Solvent exits the Strip Contactors at EXT-203P and enters Caustic Wash contactor EXT-204A. It flows from EXT-204A to EXT-204B then back to the Solvent Hold Tank (TK-202) ready for reuse.

36 CSSX CONTACTORS

Contactor Banks arranged in order of sequence in the process:

- Cesium Extraction: 16 Extraction Contactors - Decontaminate salt solution by removing cesium using the BoBCalixC6 extractant
- Solvent Scrub: 2 Scrub Contactors – Cesium rich solvent is "scrubbed" of unwanted impurities by a dilute nitric acid solution and neutralizes any caustic carryover from extraction
- Cesium Strip: 16 Strip Contactors – Cesium is "stripped" by another dilute nitric acid solution generating strip effluent
- Caustic Wash: 2 Wash Contactors - Removes solvent degradation impurities and other contaminates

Salt Solution Feed and Cesium Extraction

Purpose

To transfer cesium from the Salt Solution (aqueous) to the Solvent (organic) by mixing the aqueous with the organic then separating the cesium laden organic from the aqueous.

SWPGGS01.TP0101 103 of 274

Salt Solution Feed and Cesium Extraction Purpose

- To transfer cesium from the Salt Solution (aqueous) to the Solvent (organic) by mixing the aqueous with the organic then separating the cesium laden organic from the aqueous.

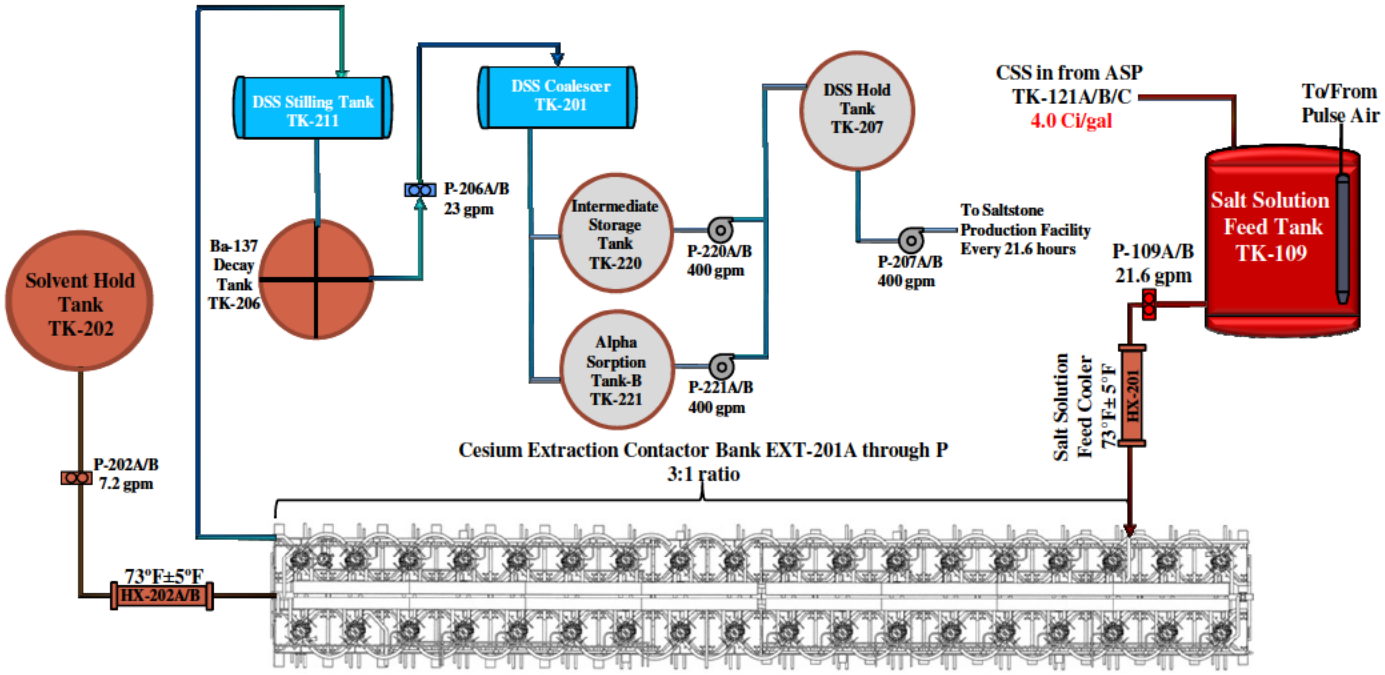

SWPGGS01.TP0101

104 of 274

Salt Solution Feed Tank Purpose

Holds the Clarified Salt Solution from the Alpha Strike Process and stages it for transfer to the CSSX contactors. It has cooling jackets on the tank to cool the CSS to 73ºF ± 5ºF.

Solvent Hold Tank Purpose

Hold tank for solvent. Solvent is transferred from the SHT to the extraction contactors and recycled solvent is transferred to the SHT.

Salt Solution Feed Tank (Room 191)
Solvent Hold Tank (Room 138)

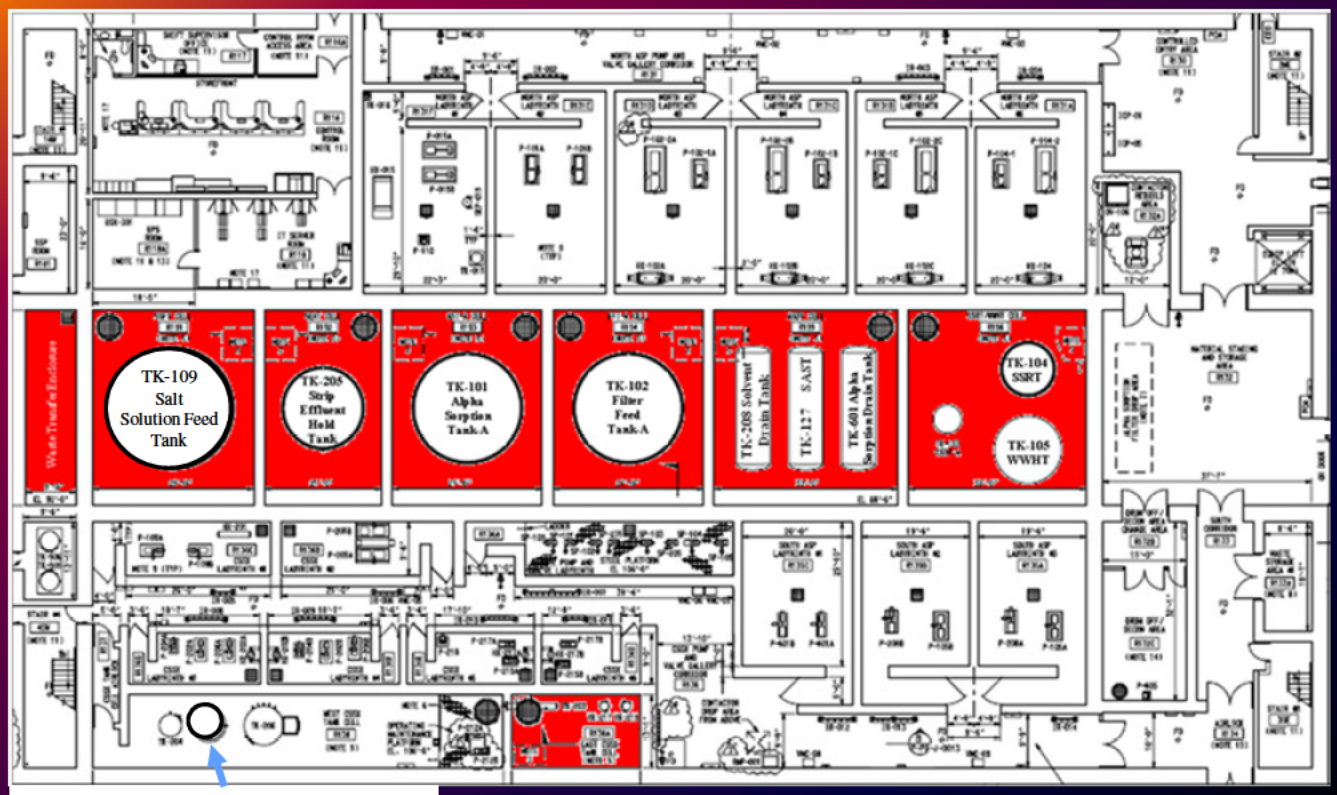

SWPGGS01.TP0101

105 of 274

Salt Solution Feed Tank Location in plant
Central Processing Area first dark cell (Room 191)

Solvent Hold Tank Location in plant
West CSSX Tank Cell (Room 138)

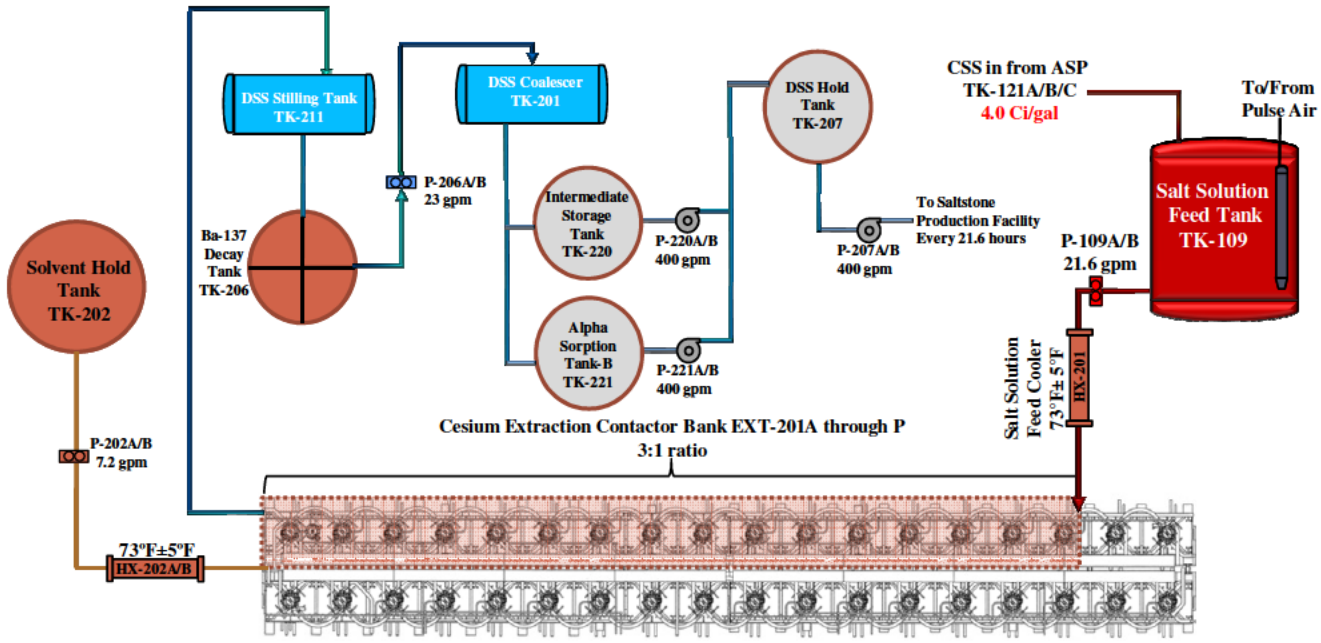

16 contactors provide a decontamination factor (DF) of ≥ 40,000

SWPGGS01.TP0101

106 of 274

Clarified Salt Solution Flow Path

Clarified Salt Solution is pumped from the Salt solution Feed Tank (TK-109) through the Salt Solution Feed Cooler via P-109A/B at 21.6 gpm.

The Salt Solution Feed Cooler regulates the Clarified Salt Solution to 73°F± 5°F.

Clarified Salt Solution flows counter current with the solvent at a ratio of 3:1.

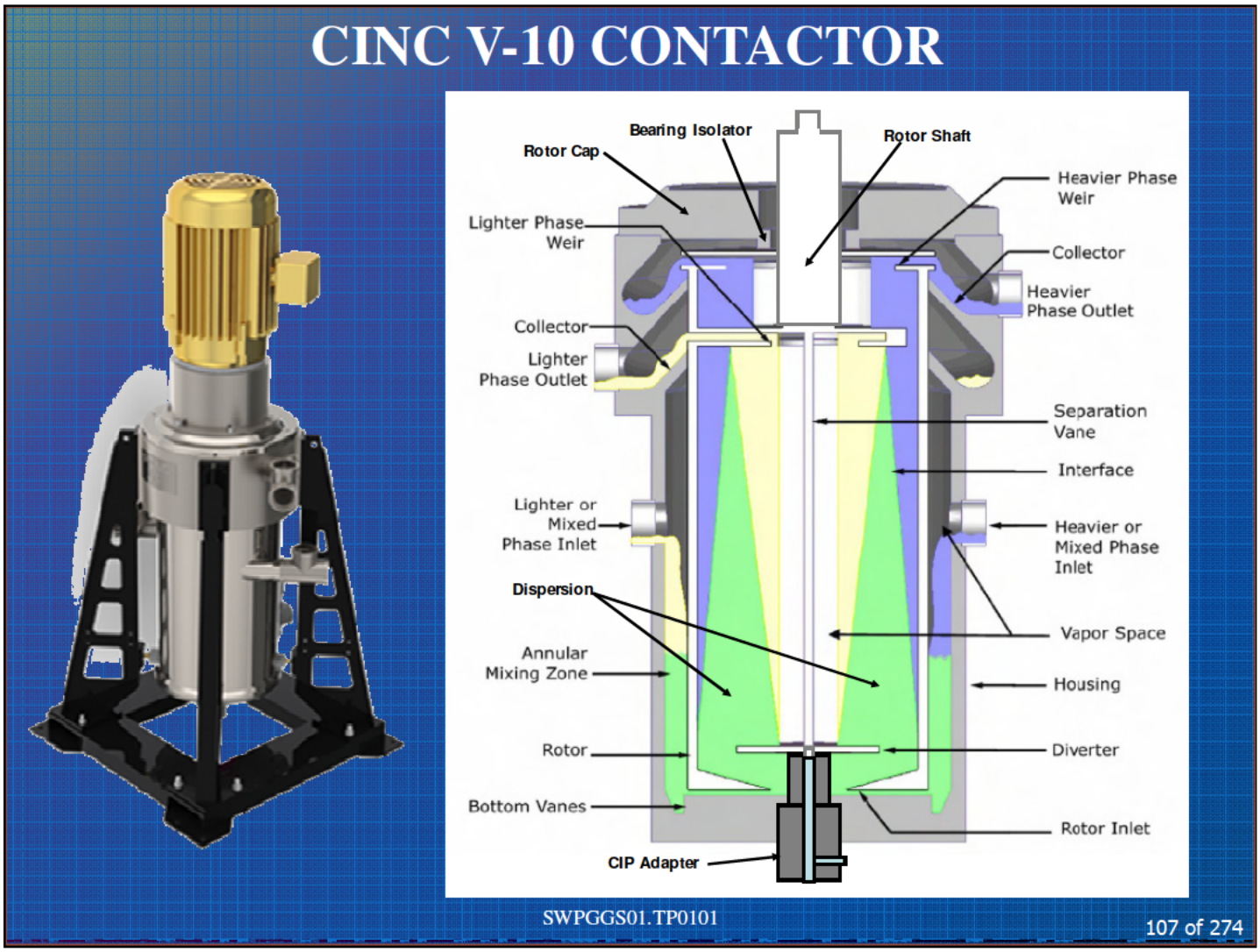

V10 Extraction Contactors

Contactors are used to mix and separate two liquids of different densities. The aqueous and organic will flow through the contactors in a counter current fashion.

CSS aqueous it has a density of 10.42 lb/gal **"Heavy"** and a specific gravity of 1.25.

Solvent has a Density of 6.93 lb/gal, **"Light"** and a specific gravity of 0.83.

How a contactor works

Two liquids with dissimilar densities fill the chamber (Annular Mixing Zone) between the housing and the rotor. The spinning of the rotor mixes the liquids through shearing action.

The mixed liquid is directed up from the bottom through the rotor inlet and around a diverter, which separates the liquid into one of four chambers. These chambers spin with the rotor. This spinning action is the centrifuge that separates the heavier aqueous from the lighter organic material.

The heavier material is routed through channels on the outside of the rotor cap and into the heavier phase weir and slung into the heavy phase collector. The lighter liquid stays closer to the center shaft and is routed through the lighter phase weir and then into the lighter phase collector.

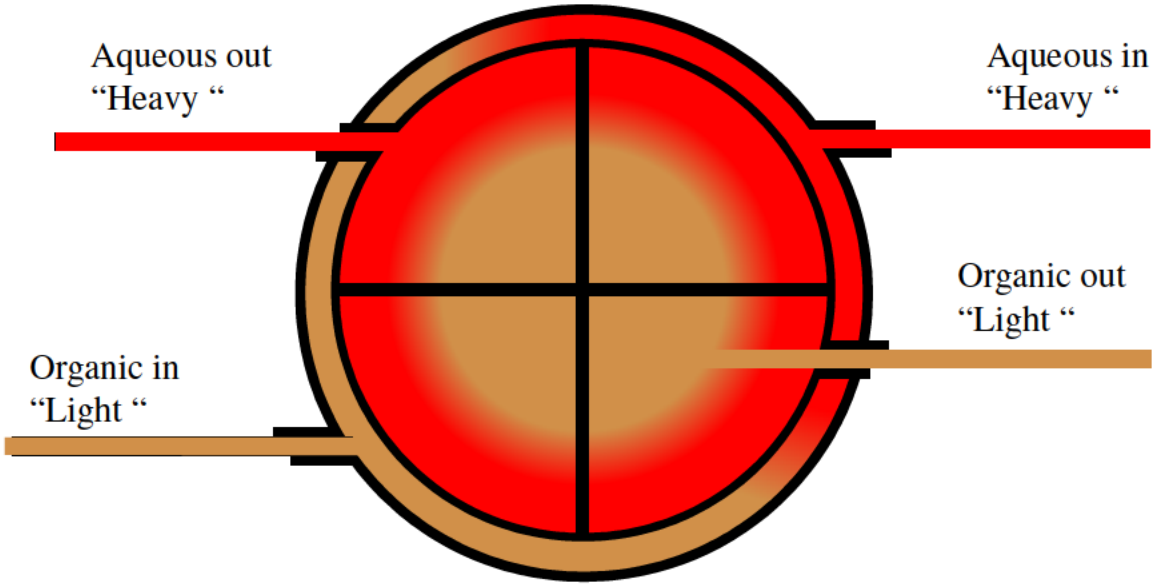

SWPGGS01.TP0101

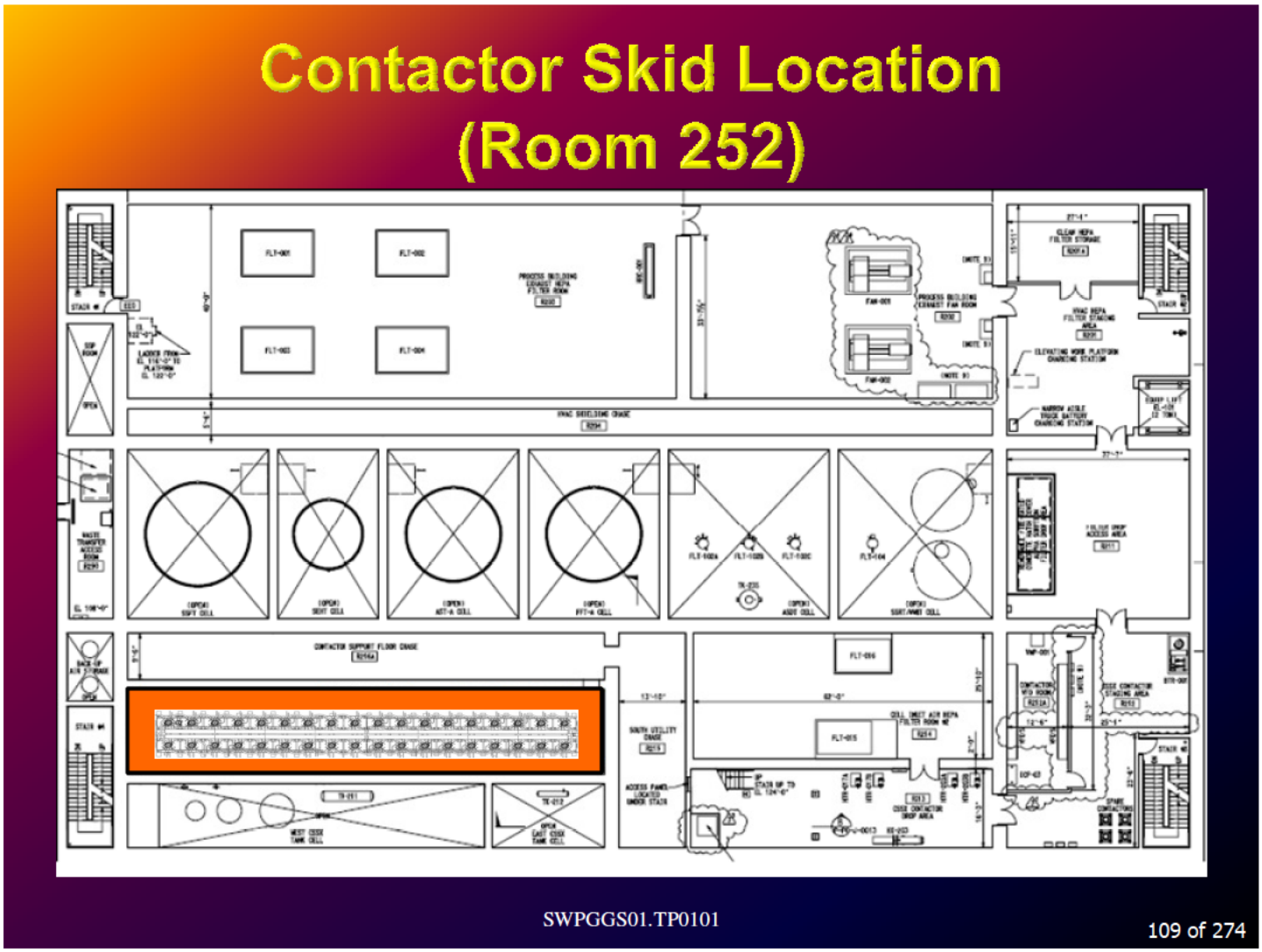

Contactor bank location in plant

The CSSX contactor skid is in Room 252.

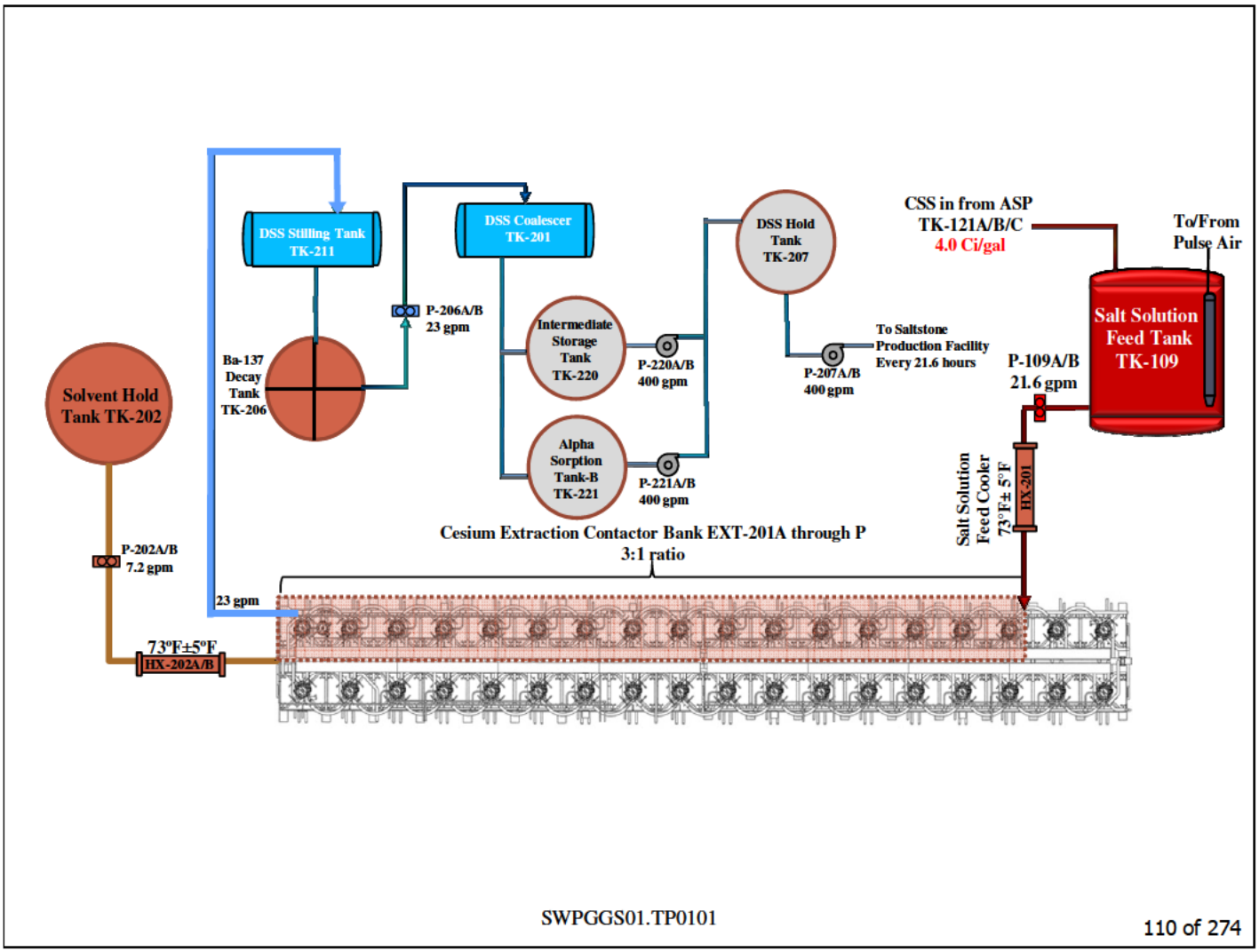

DSS Stilling Tank (TK-211) Purpose

To skim off solvent that was not removed by the extraction contactors.

Solvent recovery Program

1. Solvent is expensive (approximately $2000/gal)

2. The solvent containing Isopar®L, gives off combustible vapors at temperatures over 166ºF. Therefore, to meet the DWPF WAC, Isopar®L cannot exceed 86 ppm.

Note: DSS flow rate of 23gpm. The additional 1.4 gpm is from nitric acid in the scrub stage.

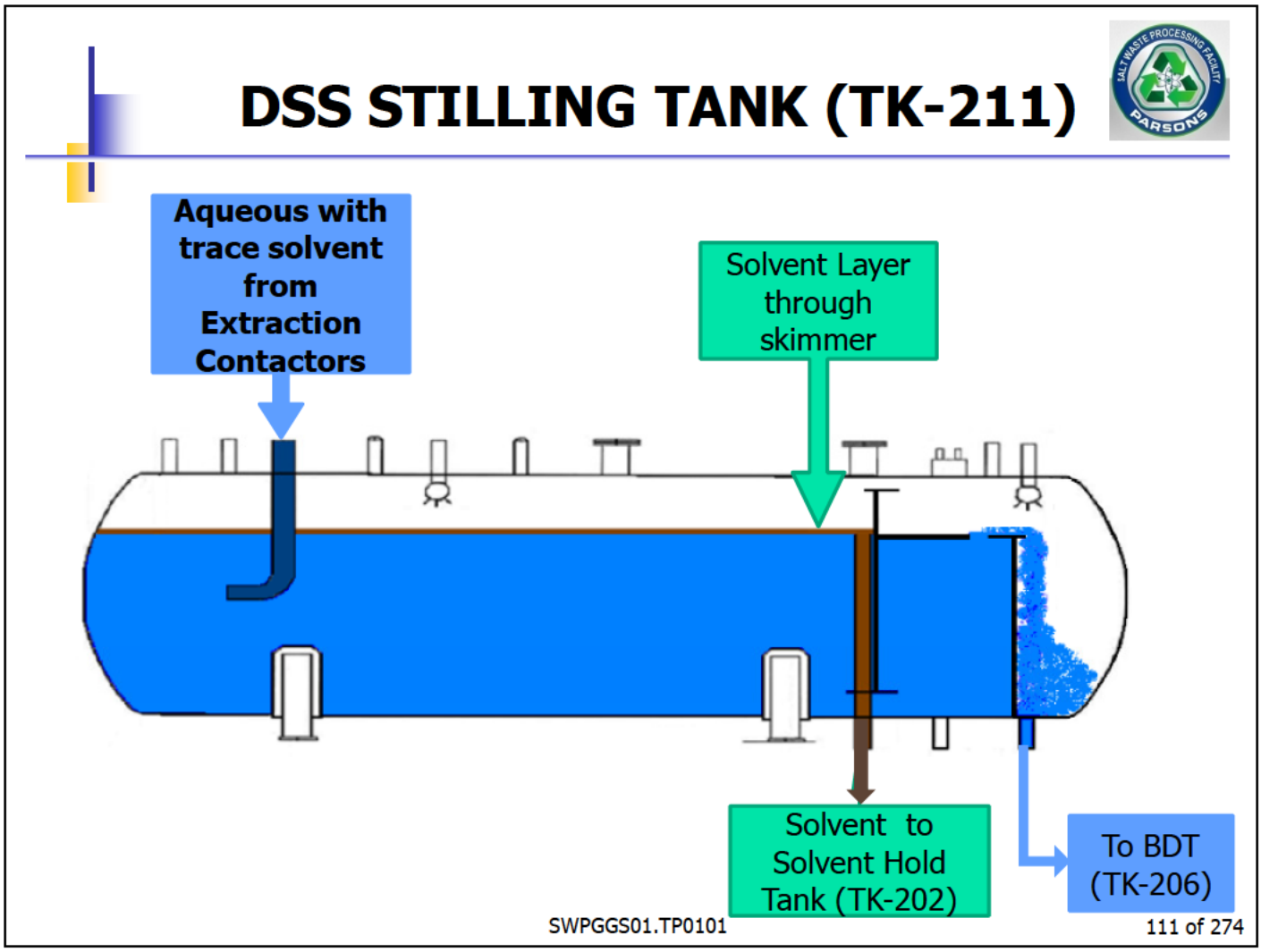

DSS Stilling Tank (TK-211) Description

It is a 235 gal tank with internal baffles.

The DSS Stilling Tank provides skimming of top layer of aqueous for coarse solvent recovery. The organic layer is skimmed off and returned to solvent Hold Tank (TK-202)

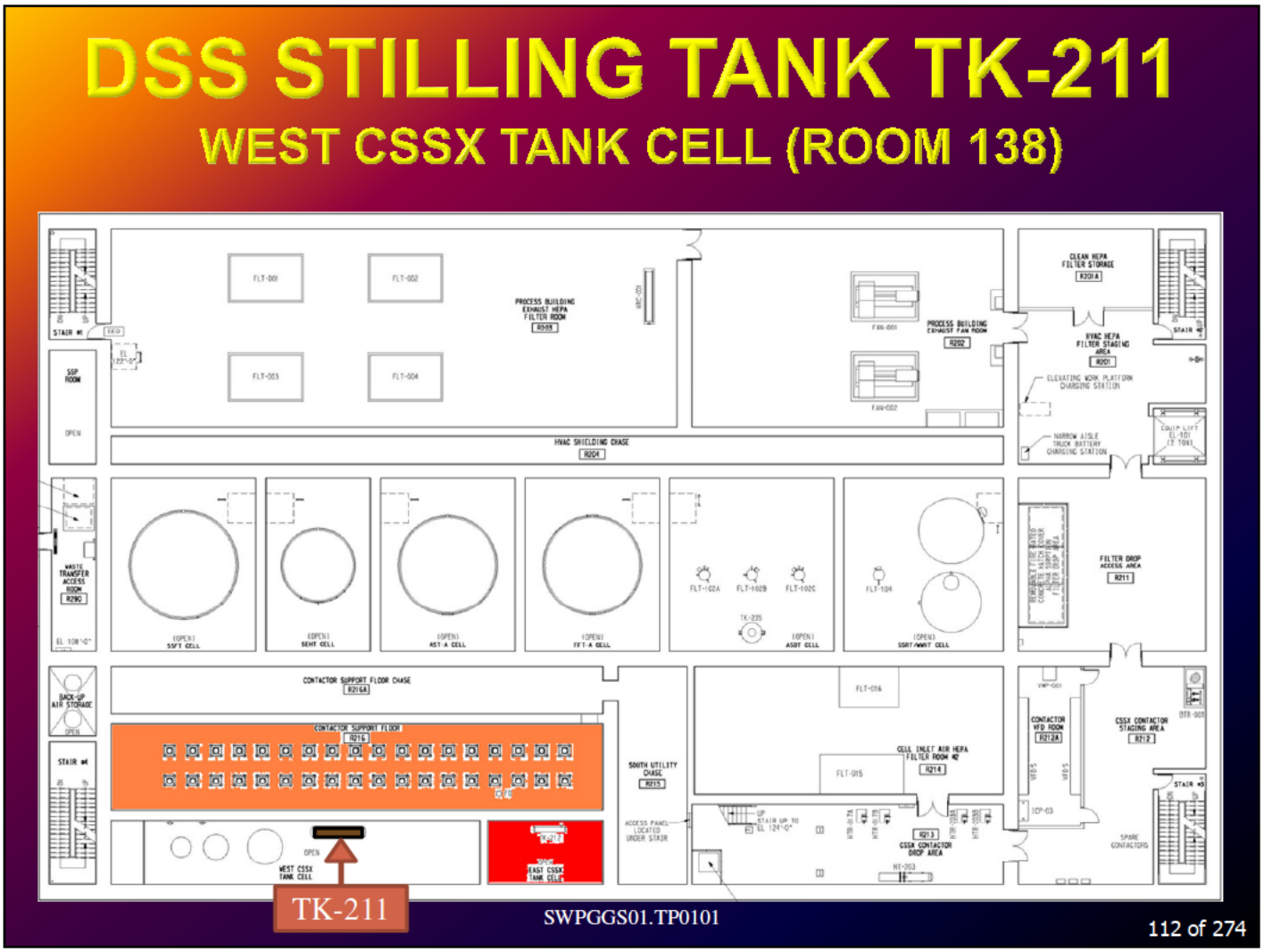

DSS Stilling Tank (TK-211) Location in plant

The DSS Stilling Tank is mounted high on wall in west CSSX Tank Cell (Room R138).

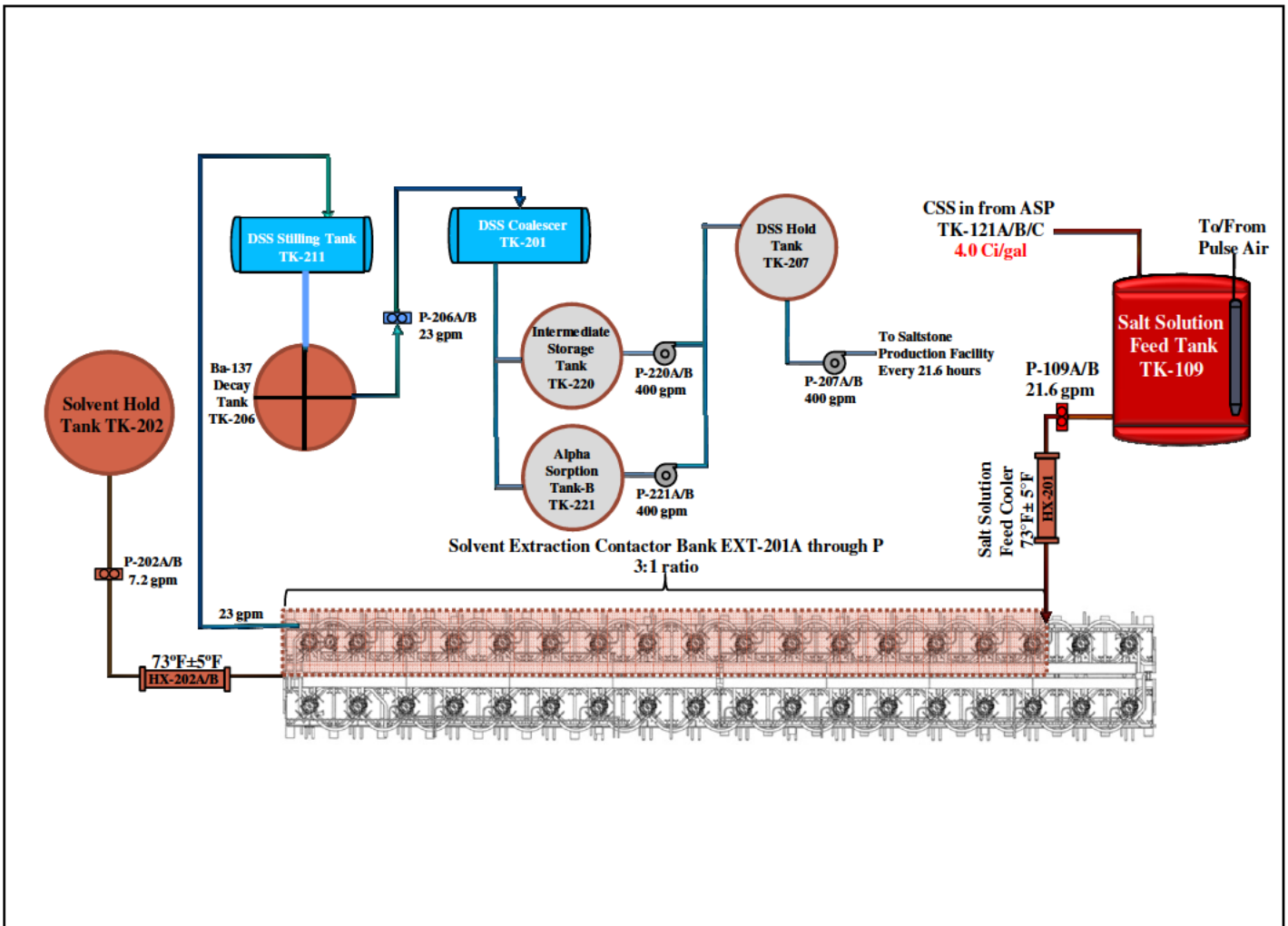

SWPGGS01.TP0101

113 of 274

Flow path from DSS Stilling Tank to the Ba-137 Decay Tank.

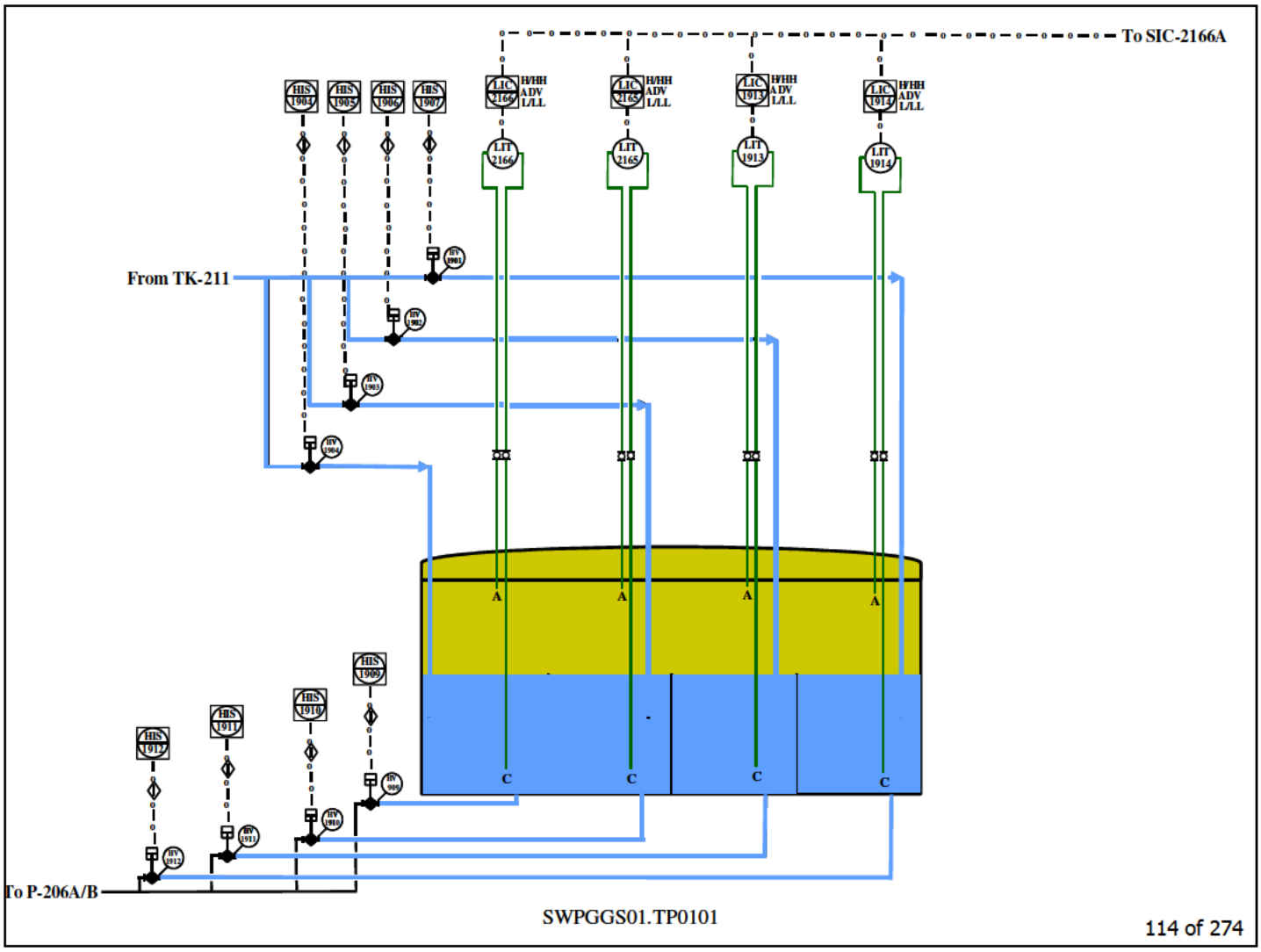

Ba-137 Decay Tank (TK-206) Description

- 1200 gal. tank with four quadrants.
- Each quadrant fills in 16 min.

Purpose

Provides minimum holding time (2.5 minutes half-life X 7 = 17.5 min) to allow the Ba-137m to decay to Ba-137 by a factor of 40,000.

Actual hold time is approximately 40 min.

Ba-137m is a daughter product of cesium-137 and gives off gamma rays. Allowing sufficient time for the Ba-137m to decay in this tank gives confirmation that the cesium has been sufficiently removed by gamma monitoring downstream of this tank.

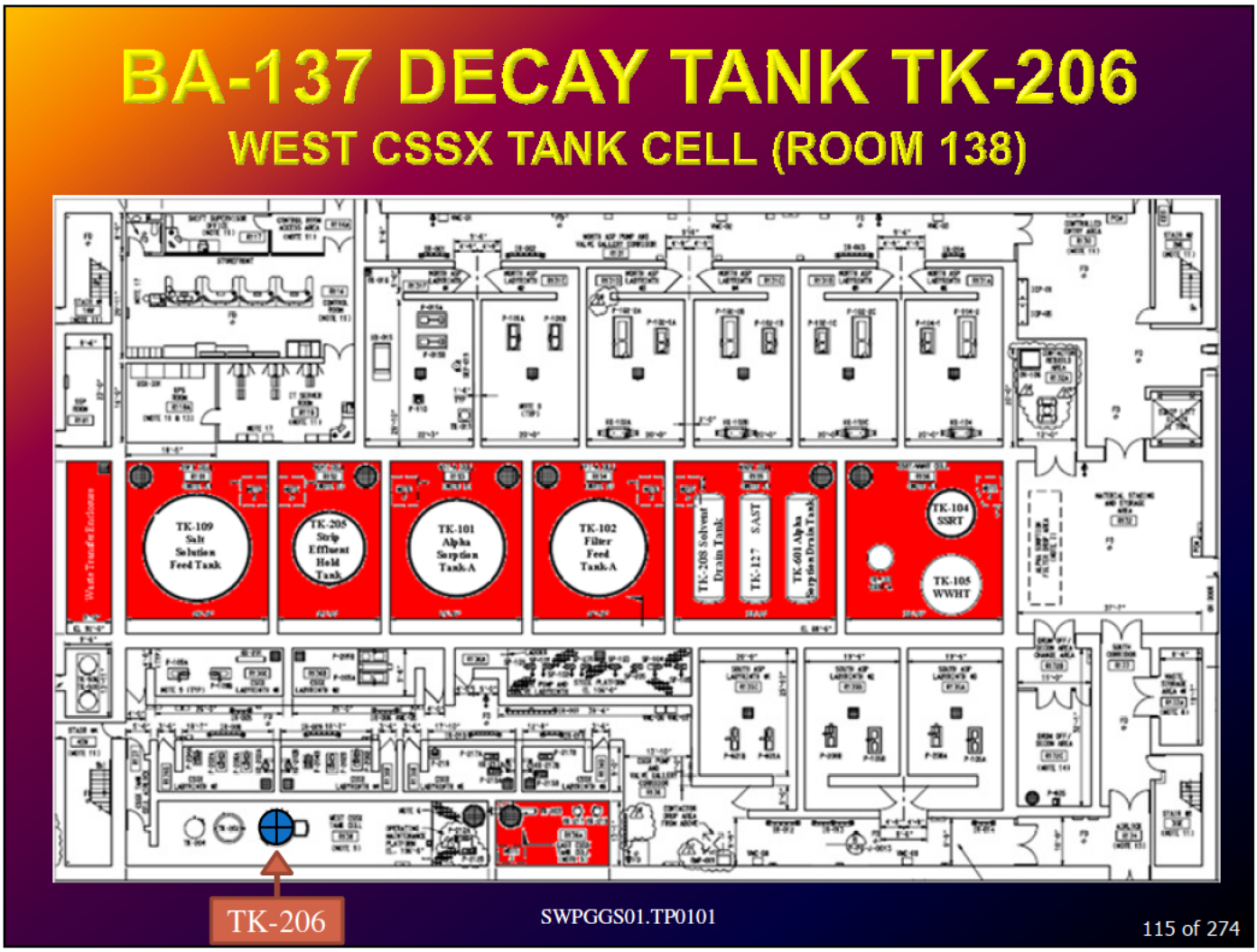

Ba-137 Decay Tank (TK-206) Location in plant
- The West CSSX Tank Cell (Room 138).

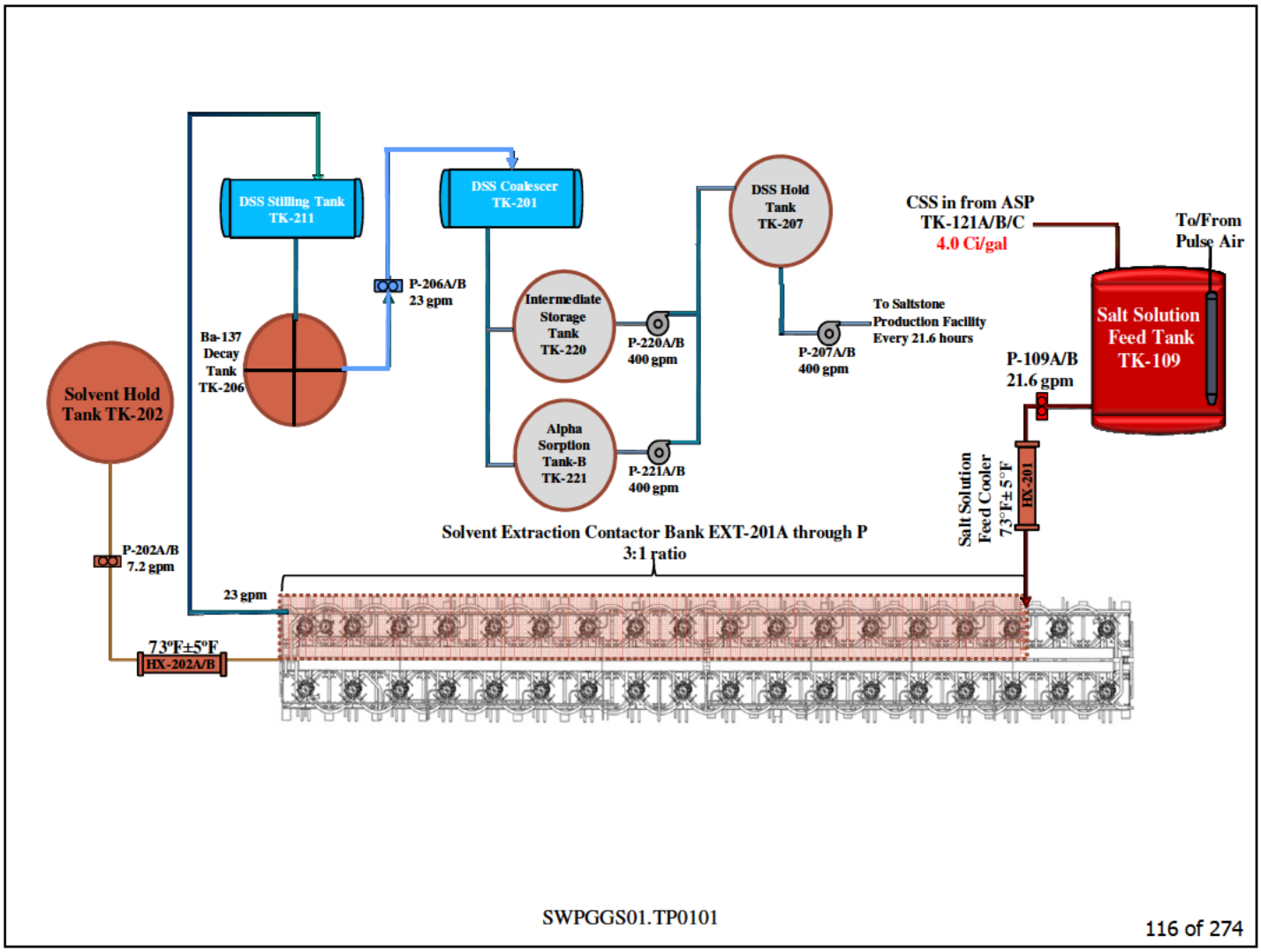

Pump P-206A/B pumps DSS from the Ba-137 Decay Tank (TK-206) to the DSS Coalescer at 23 gpm.

DSS COALESCER (TK-201)

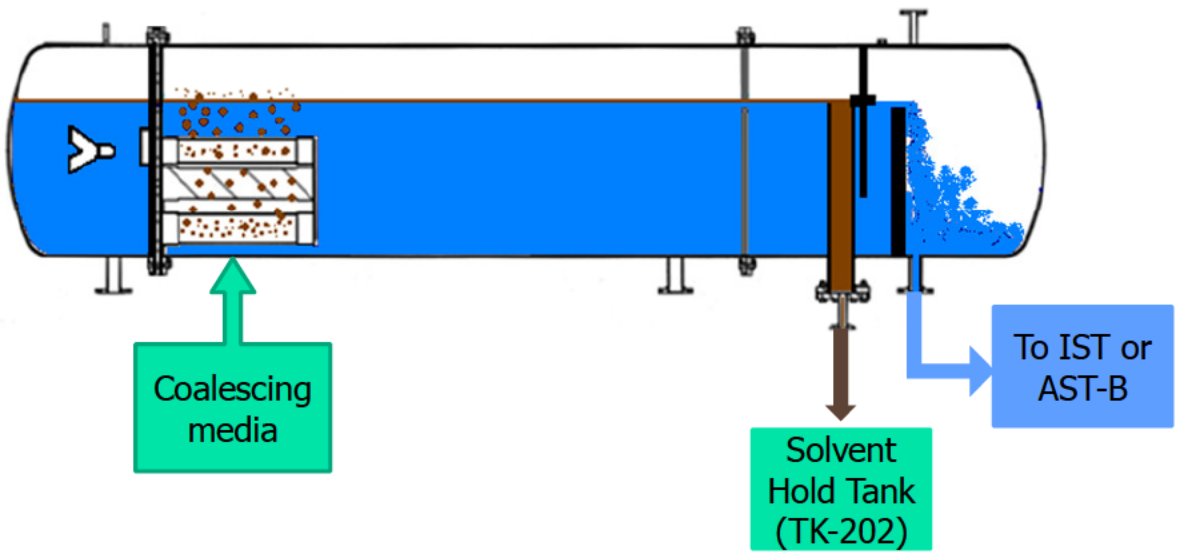

SWPGGS01.TP0101 117 of 274

DSS Coalescer (TK-201) Purpose

Recovery of fine dispersed organic carryover droplets.

Recovered solvent from the DSS Coalescer (TK-201) flows to the Solvent Hold Tank (TK-202) for reuse. DSS flows to the Intermediate Storage Tank or the Alpha Sorption Tank-B (TK-221).

How the DSS Coalescer (TK-201) works

Entrained organic droplets are intercepted by the fine fibers of coalescing media and coalesce into larger droplets. The enlarged droplets on the fibers disengage and float to the top of the aqueous solution.
The organic layer is skimmed off and returned to solvent Hold Tank

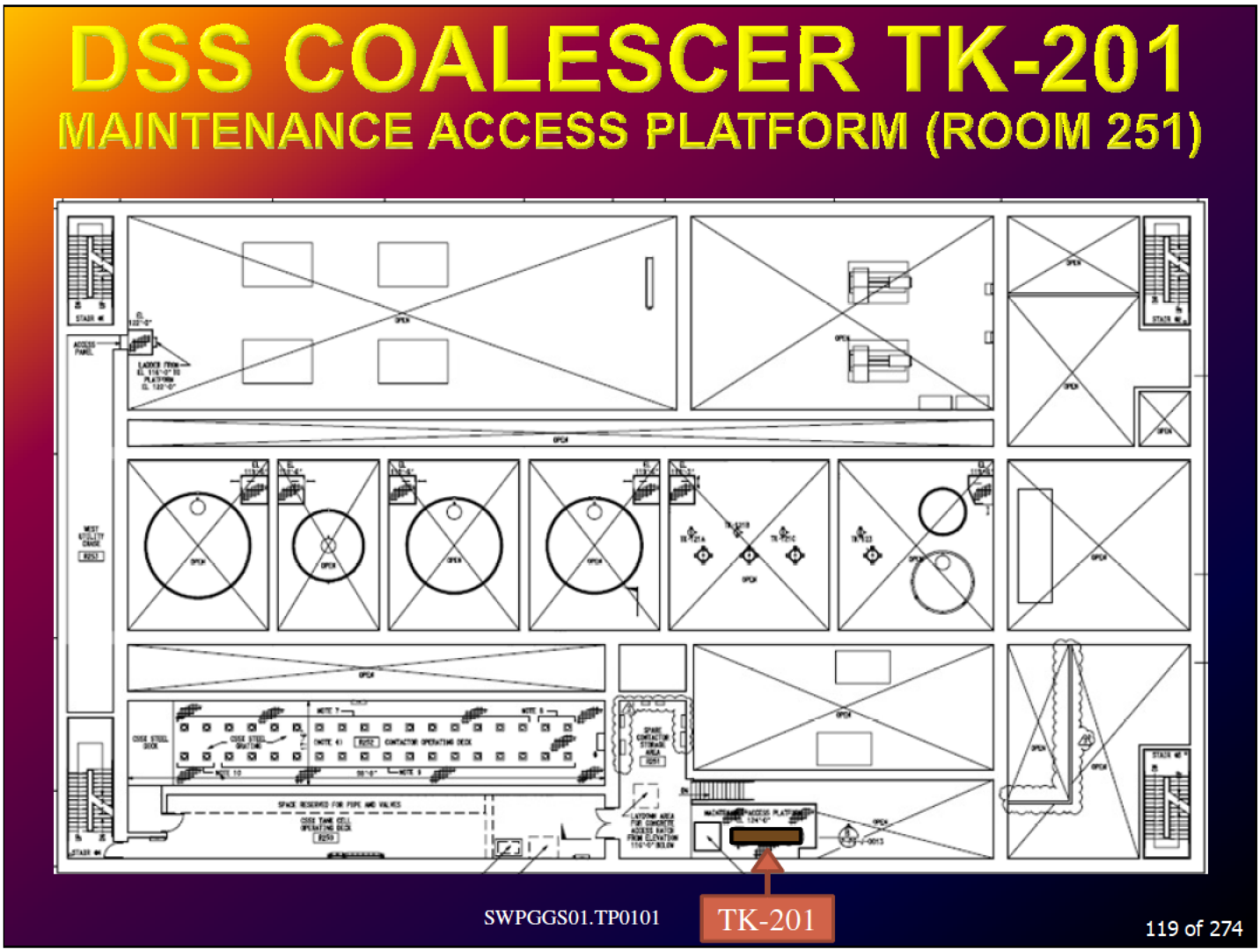

DSS Coalescer (TK-201) Location

Maintenance access platform in the Spare Contactor Storage Area (Room R251)

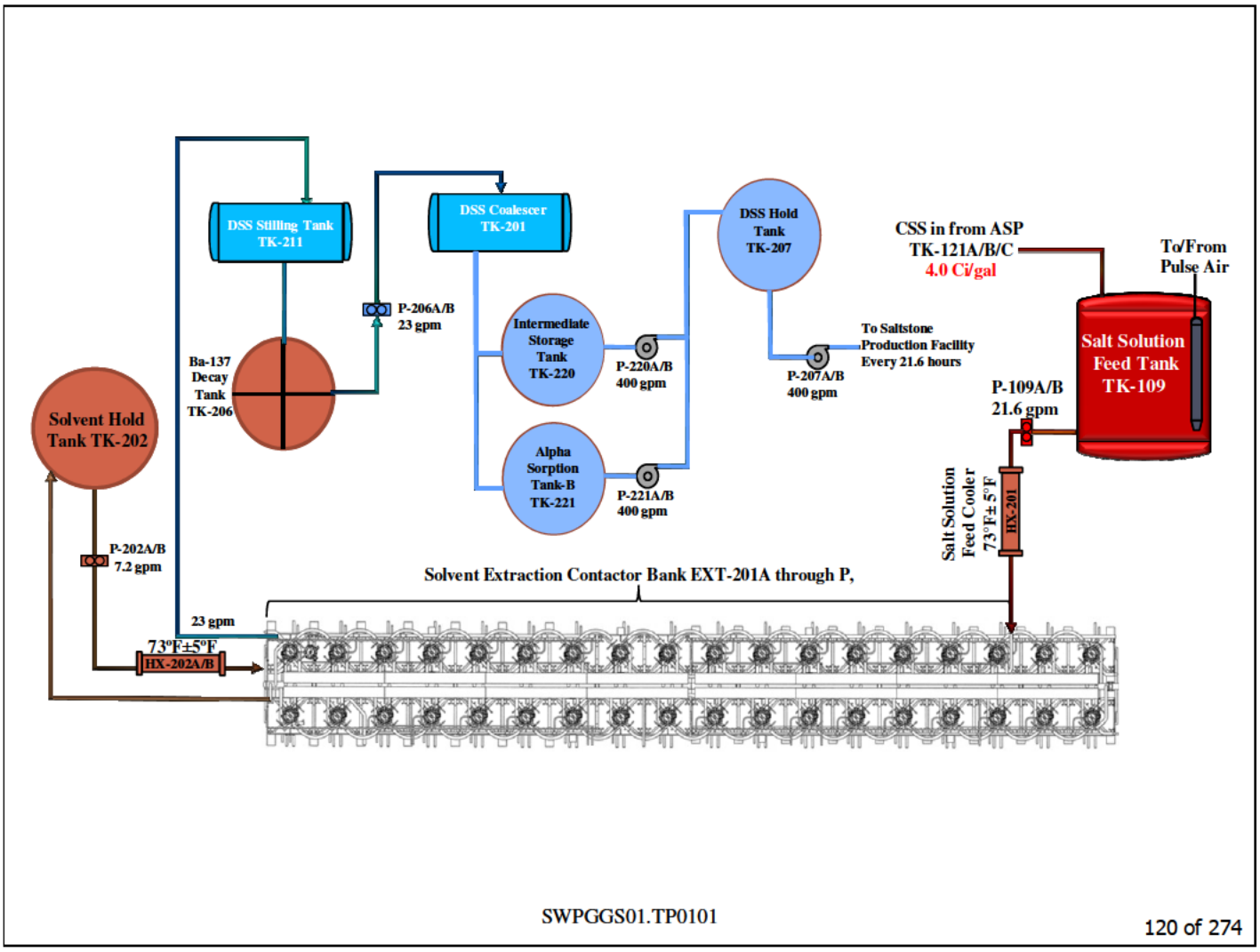

Intermediate Storage Tank (TK-220) and Alpha Sorption Tank-B (TK-221) in Single Strike Mode Purpose

- Used alternately to receive DSS from the DSS Coalescer.
- Provides holdup for sampling before transfer to the DSS Hold Tank.

DSS Hold Tank (TK-207)

- Used to receive DSS and stage it for transfer to the Saltstone Production Facility.

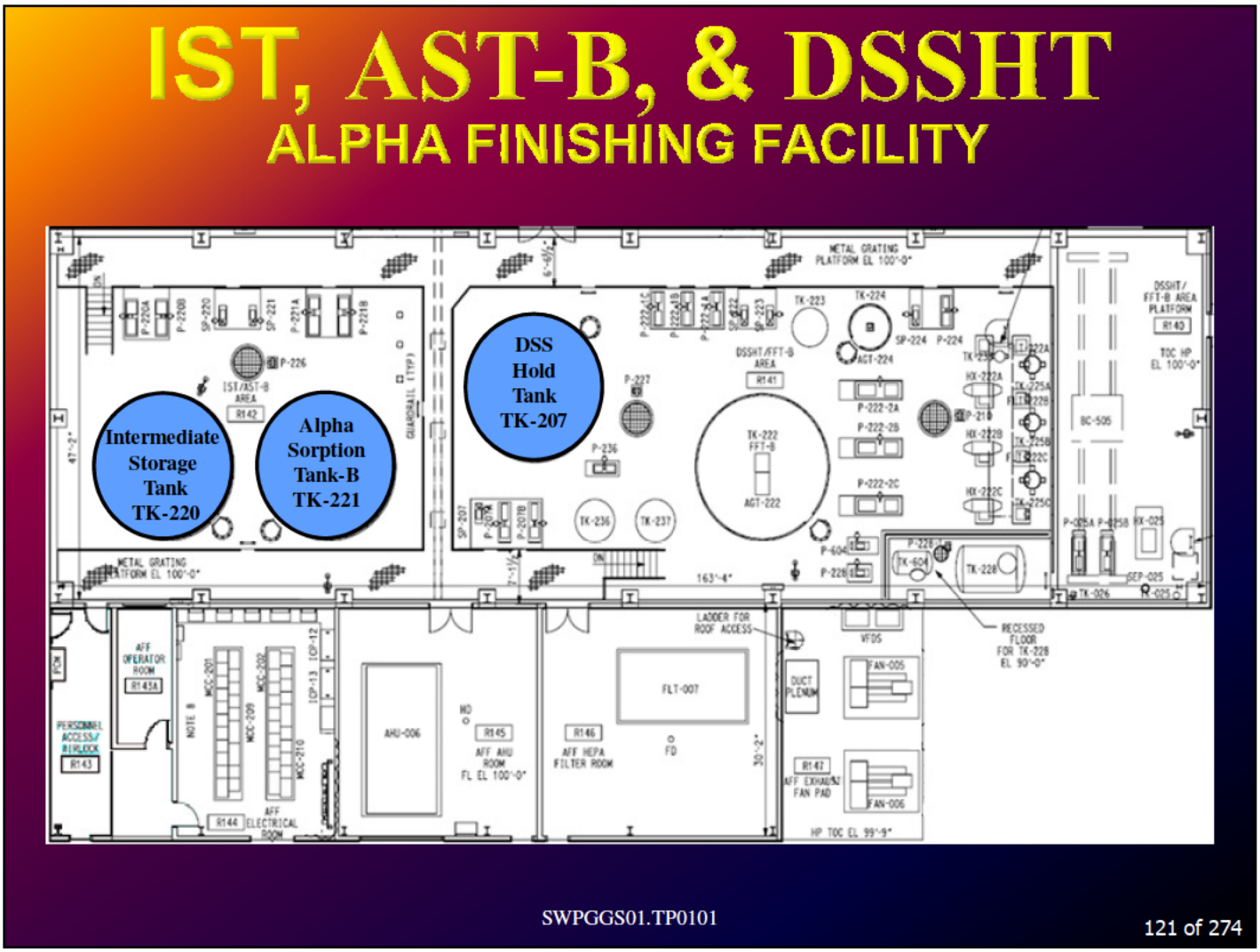

IST, AST-B, and DSSHT Location

<u>The IST (TK-220) and AST-B (TK-221)</u>
Located in the IST/AST-B area of the Alpha Finishing Facility (Room R142).

<u>The DSSHT (TK-207)</u>
Located in the DSSHT/FFT-B Area of the Alpha Finishing Facility (Room R141).

36 CSSX CONTACTORS

Contactor Banks arranged in order of sequence in the process:

- Cesium Extraction: 16 Extraction Contactors - decontaminates the salt solution by removing Cs with the use of BoBCalixC6 extractant.
- Solvent Scrub: 2 Scrub Contactors - Cs rich solvent is "scrubbed" of unwanted impurities, (metal ions such as Na, K, aluminum, iron, and mercury) using .05M nitric acid solution.

Solvent Scrub

Purpose

Prevents transfer of metal ions such as Na, K, aluminum, iron, and mercury to the strip solution and neutralizes any caustic carryover from the extraction process.

SWPGGS01.TP0101 123 of 274

Solvent Scrub Purpose

Scrubbing the metal ions sodium (Na), potassium (K), aluminum (Al^+), iron (Fe^+), and mercury (Hg^+) from the organic prevents transfer of these ions to the strip solution.

Contacting the organic stream with the 0.05M nitric acid also has the effect of neutralizing any caustic carryover from the extraction stages. Neutralization of the caustic carryover is necessary to ensure stable operation of the strip stages.

Cesium does not scrub out because it has a nitrate pair that forms a strong ionic bond and does not like the high level of nitrate in the scrub solution.

Potassium and sodium have weak ionic bonds and are easily scrubbed out of the solvent.

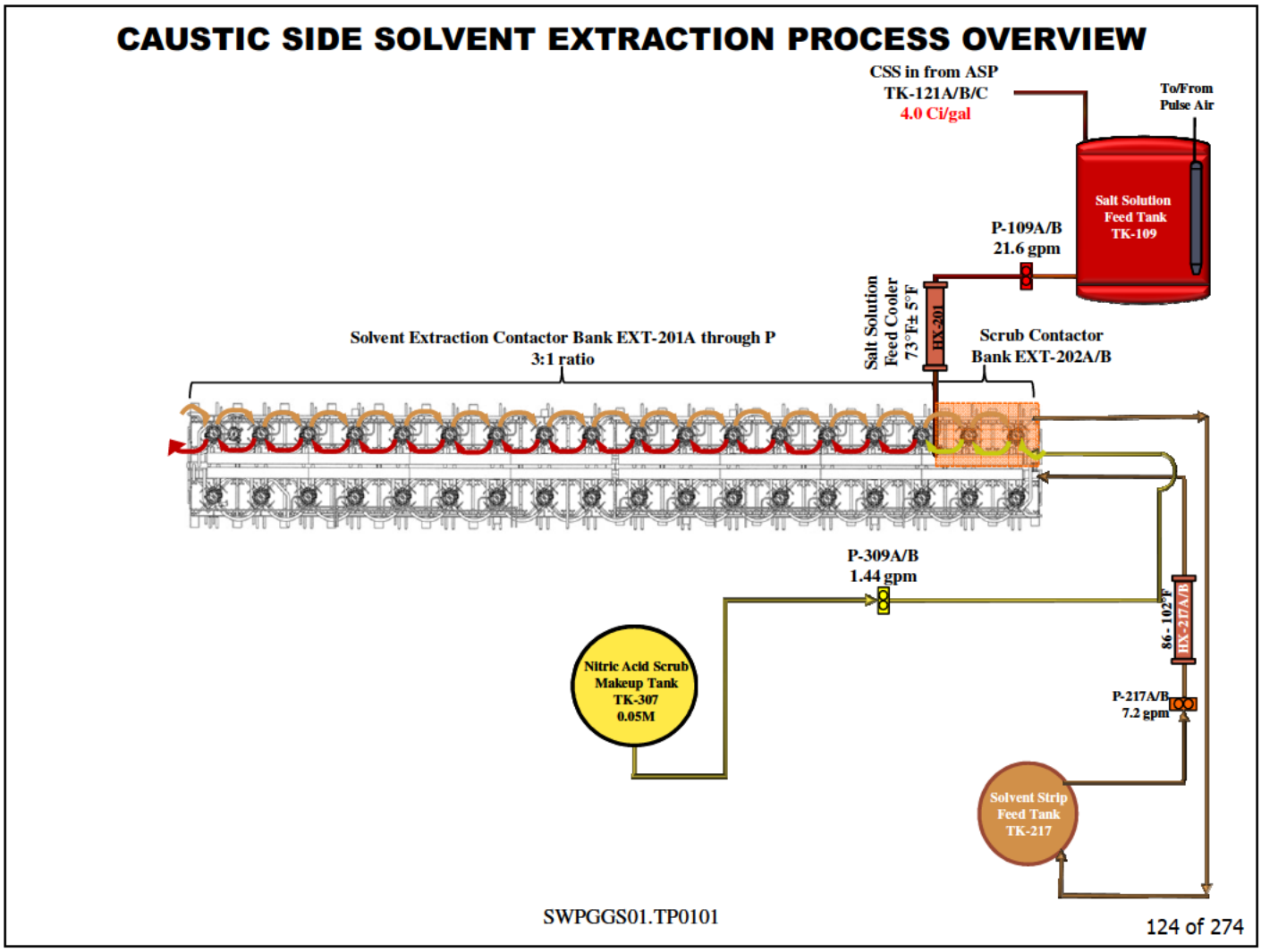

Solvent Scrub Flow Path

Two stages of scrub are provided (EXT-202A/B). The nitric acid (0.05M HN03) scrub solution enters EXT-202A and proceeds counter-current to the solvent. Scrub solution is provided from the Nitric Acid Scrub Makeup Tank (TK-307) by one of the two Scrub Feed Pumps (P-309A/B) located in the CCA. Solvent leaves the scrub section and drains to the Solvent Strip Feed Tank (TK-217) located in the East CSSX Tank Cell.

Cesium Strip

Purpose

To transfer cesium from the solvent to the strip solution

SWPGGS01.TP0101 125 of 274

Cesium Strip Purpose

To transfer cesium from the solvent to the strip solution.

36 CSSX CONTACTORS

Contactor Banks arranged in order of sequence in the process:

- Cesium Extraction: 16 Extraction Contactors – Decontaminate salt solution by removing cesium with the use of BoBCalixC6 extractant.
- Solvent Scrub: 2 Scrub Contactors – Cesium rich solvent is "scrubbed" of unwanted impurities from the organic. This prevents transfer of these ions to the strip solution.
- Cesium Strip: 16 Strip Contactors – Cesium is "stripped" by .001M nitric acid solution generating strip effluent

SWPGGS01.TP0101 126 of 274

Cesium Strip

By reducing the nitric acid to 0.001M (low nitrate ion concentration), the cesium nitrate ion will now prefer (strong pull) the 0.001M nitric acid over the solvent and will transfer to the dilute acid solution.

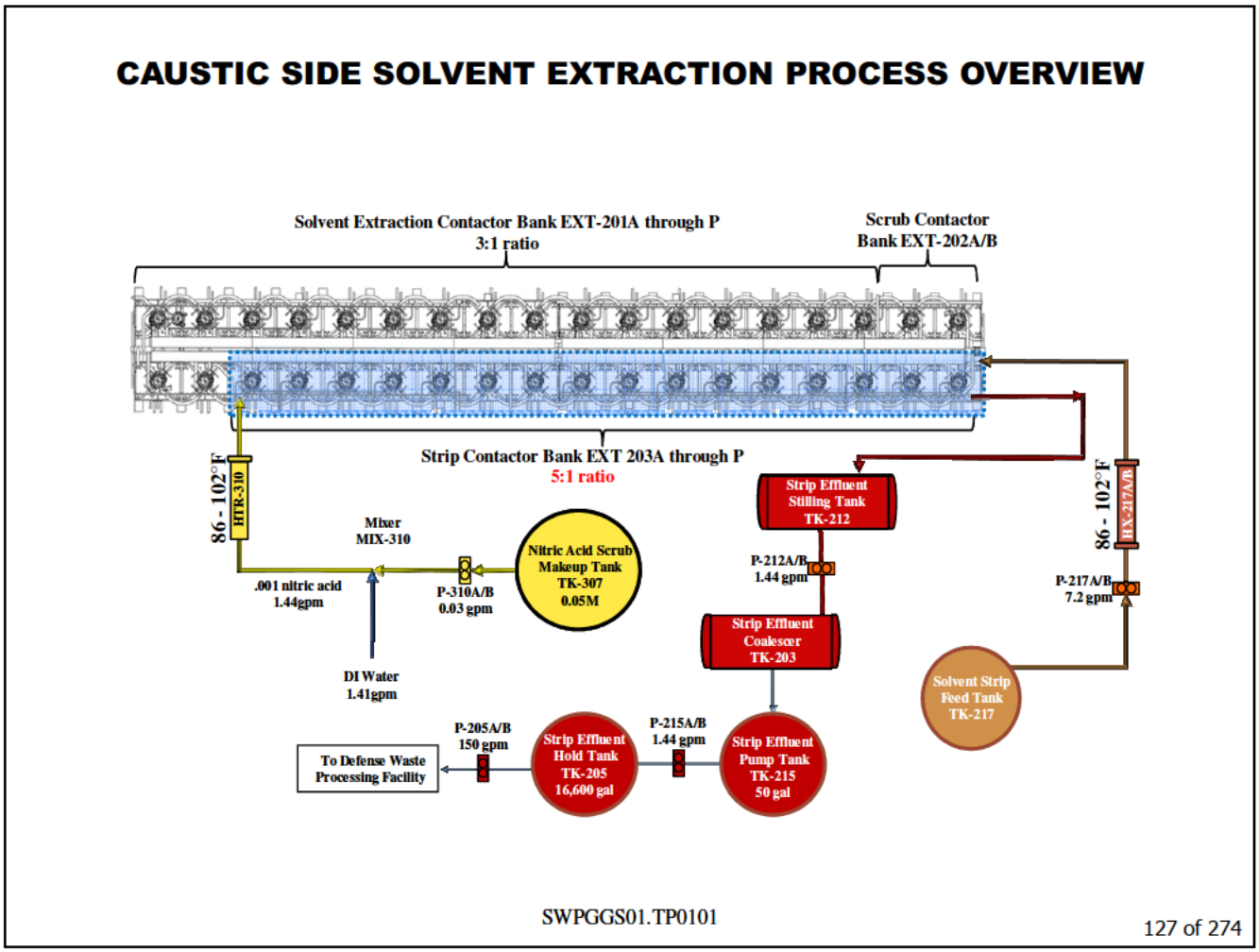

The scrubbed solvent is pumped by one of the Solvent Strip Feed Pumps (P-217A/B) to Stripping Contactor EXT-203A.

The 0.001M nitric acid strip solution is supplied to the aqueous inlet of Stripping Contactor EXT-203P from the Nitric Acid Scrub Makeup Tank (TK-307) by the Strip Feed Pumps (P-310A/B) at 0.03 gpm and DI Water at 1.41gpm.

NOTE:	The solvent and strip solutions are maintained at **86 - 102°F** for optimum efficiency. The decontamination value is highly temperature dependant.

Cs-laden solvent from the scrub contactors is contacted counter-current with the 0.001M HNO3 strip solution at a ratio of 5:1 in a series of 16 centrifugal contactors, resulting in the transfer of Cs to the strip solution. Strip effluent exits the strip stages and flows by gravity to the Strip Effluent Stilling Tank.

Strip Effluent Stilling Tank (TK-212) Purpose

To remove large amounts of entrained solvent in the aqueous phase.

Strip Effluent Stilling Tank (TK-212) Description

It is a small 29 gal tank. A skimmer is used to remove the organic layer from the surface of the strip effluent and sent to the Solvent Drain Tank (TK-208).

Strip Effluent Coalescer (TK-203) Purpose

Removes fine amounts of organic carryover into the aqueous phase. Entrained solvent droplets are intercepted by the fine fibers of coalescing media and coalesce into larger droplets, disengage and float to the top of the aqueous solution. The organic layer is then skimmed off to the Solvent Drain Tank (TK-208).

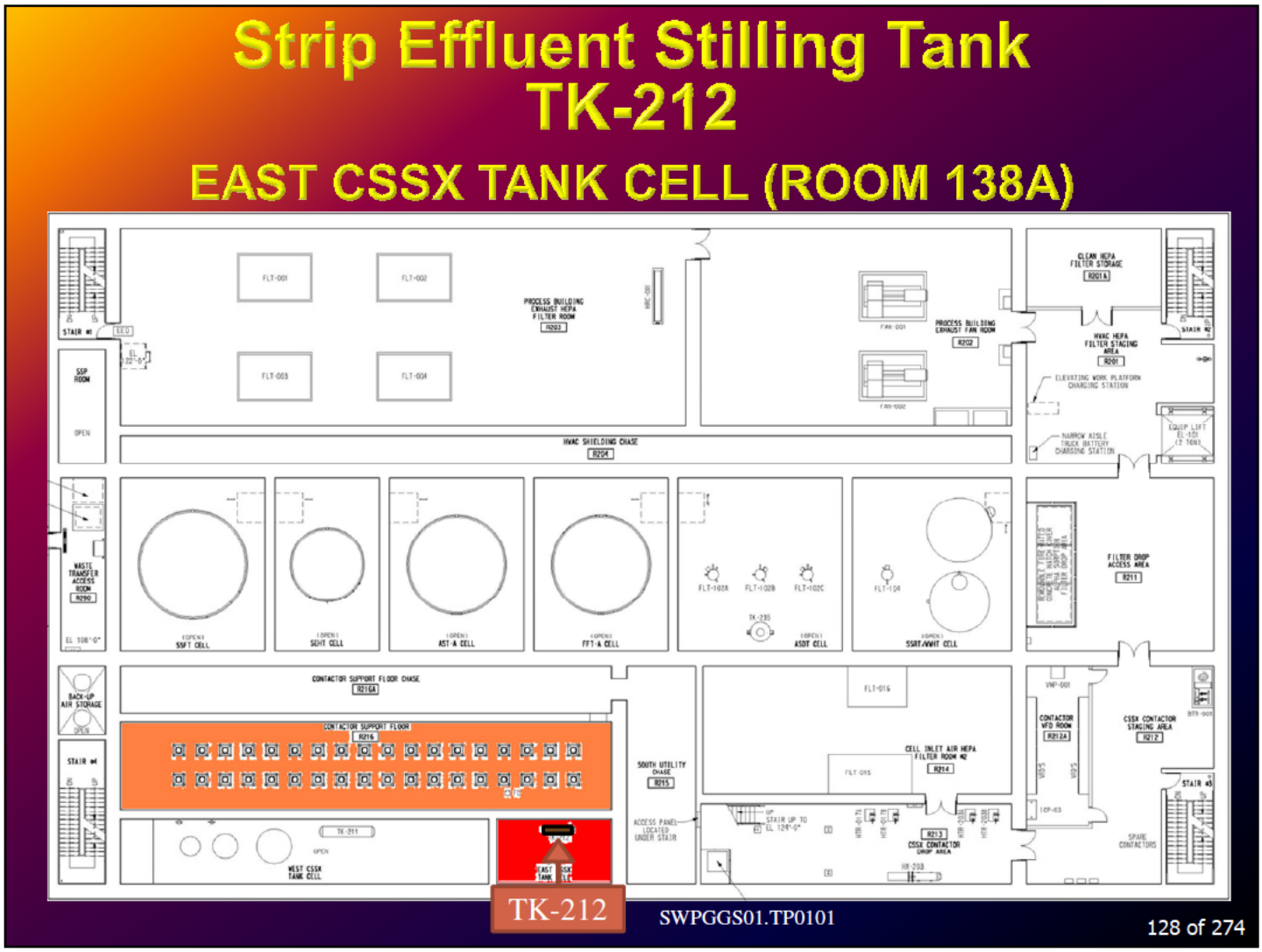

Strip Effluent Stilling Tank (TK-212) Location

East CSSX Tank cell (Room 138A).

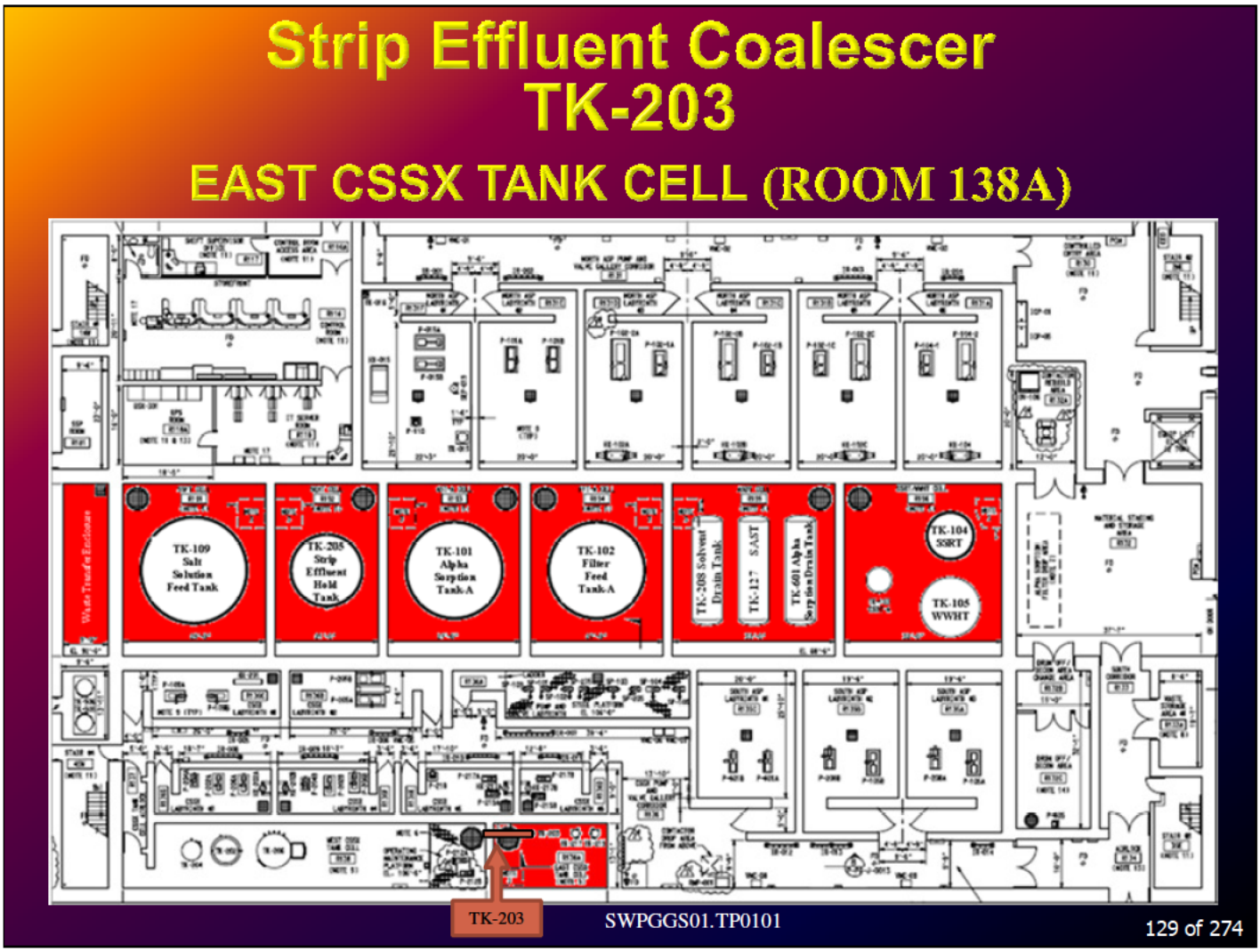

Strip Effluent Coalescer (TK-203) Location

Mounted between East and West CSSX Tank Cells with the head facing the West Cell and the tank body in the East CSSX Tank cell (Room 138A).

Strip Effluent Coalescer (TK-203)

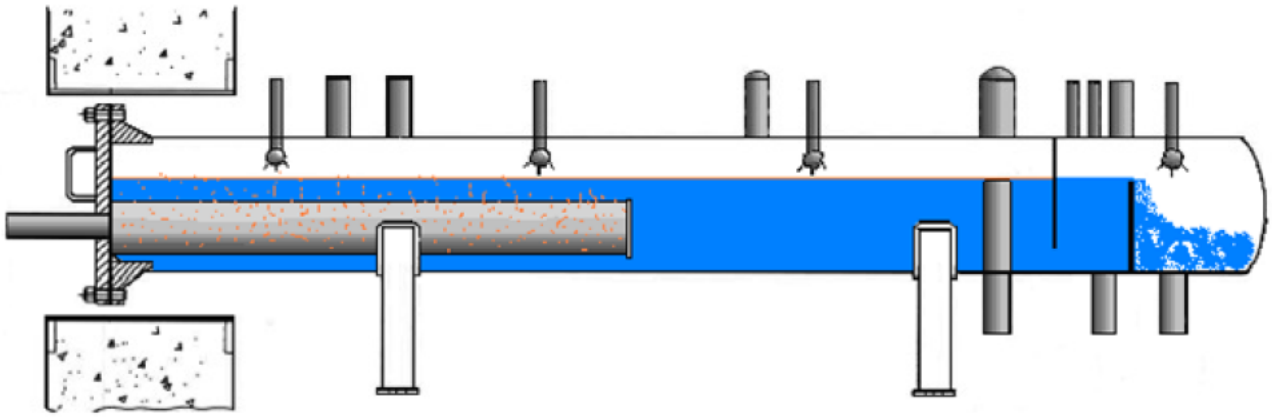

SWPGGS01.TP0101 130 of 274

Strip Effluent Coalescer (TK-203) Position

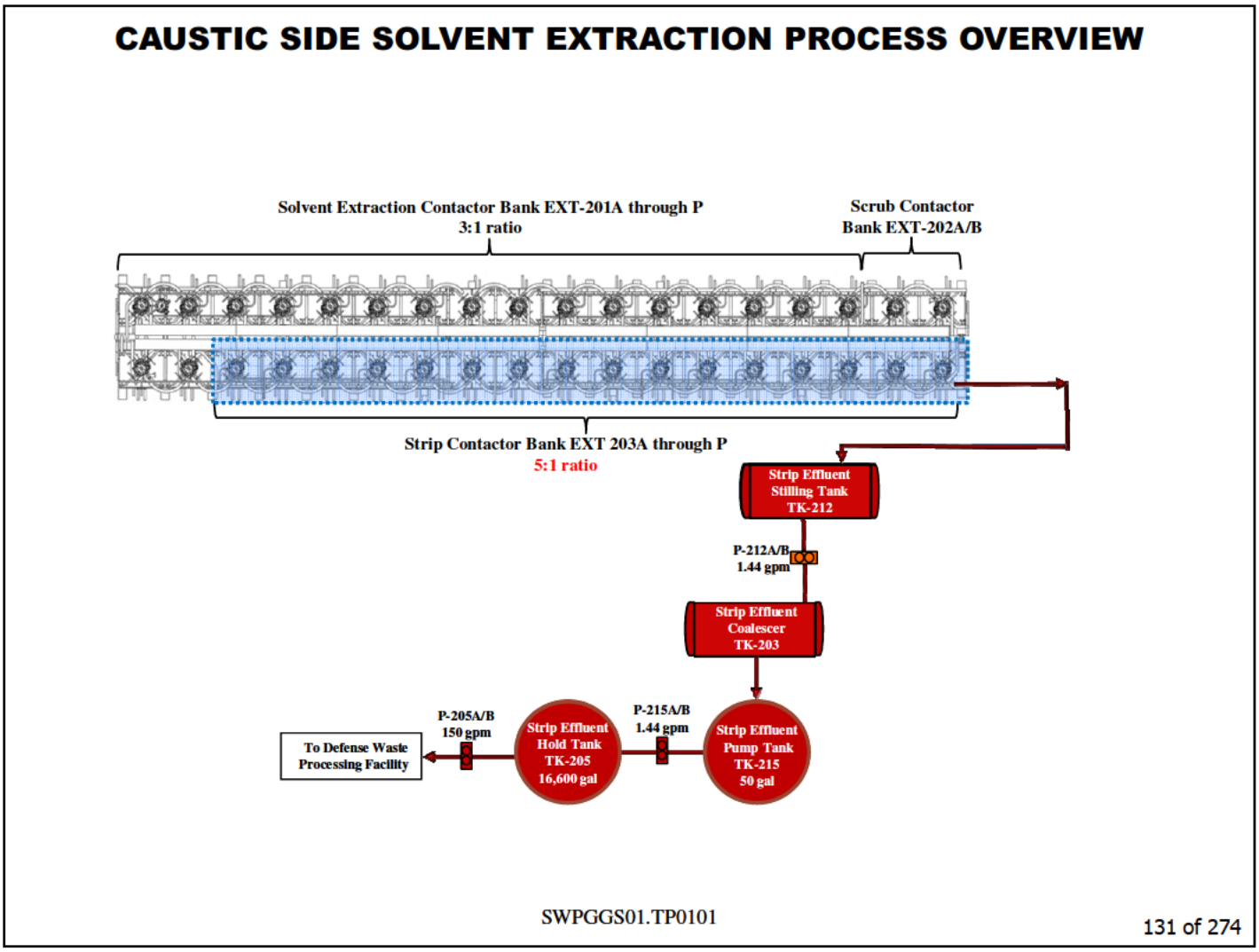

Strip Effluent Pump Tank (TK-215)

Aqueous effluent from the Strip Effluent Coalescer gravity-flows to the Strip Effluent Pump Tank (TK-215).

Strip Effluent Pump Tank Purpose

Holds a minimum volume of aqueous to maintain a suction head for transfer pumps P-215A/B and allows tank level control.

The outlet of P-215A/B is monitored by gamma monitors to determine the Cs-137 concentration in the strip effluent.

Strip Effluent Pump Tank (TK-215) East CSSX Tank cell (Room 138A)

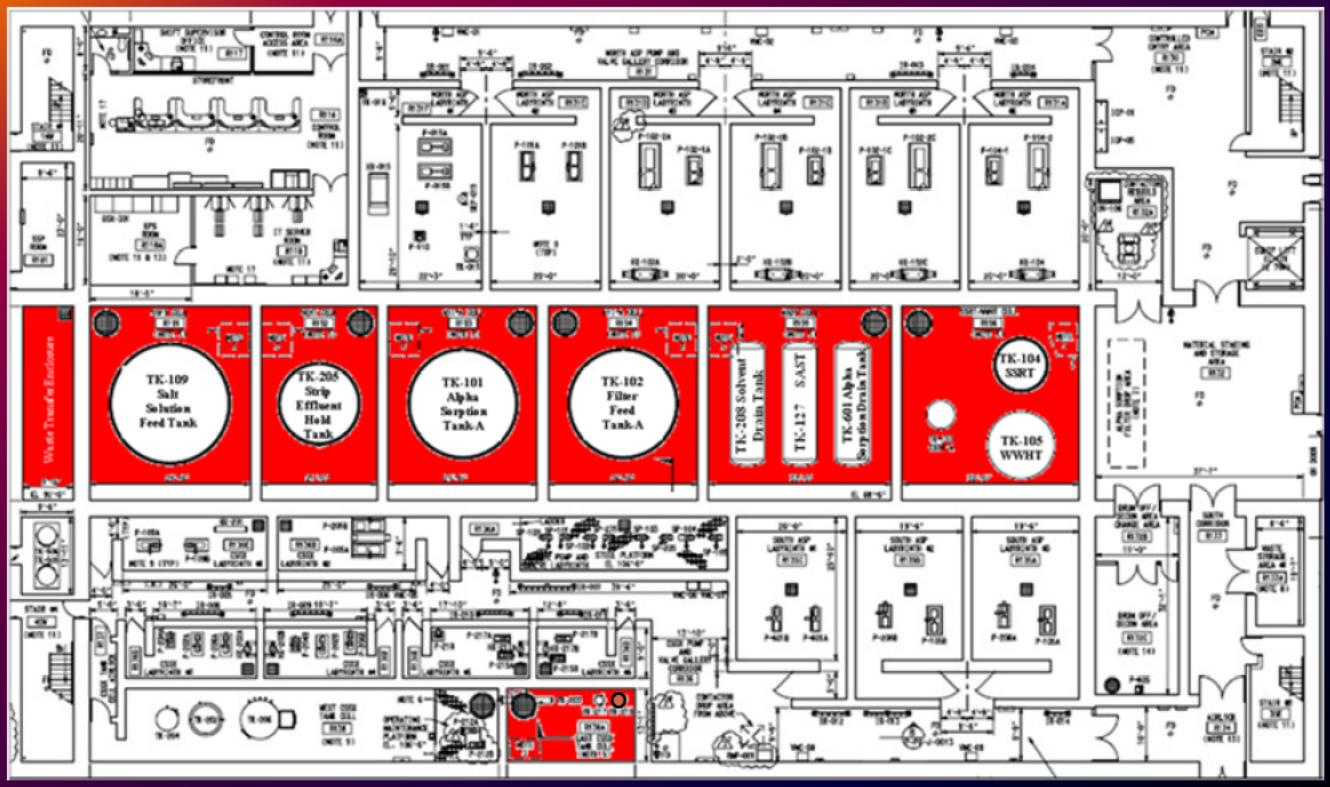

SWPGGS01.TP0101

132 of 274

Strip Effluent Pump Tank (TK-215) Location

East CSSX Tank Cell (Room 138A)

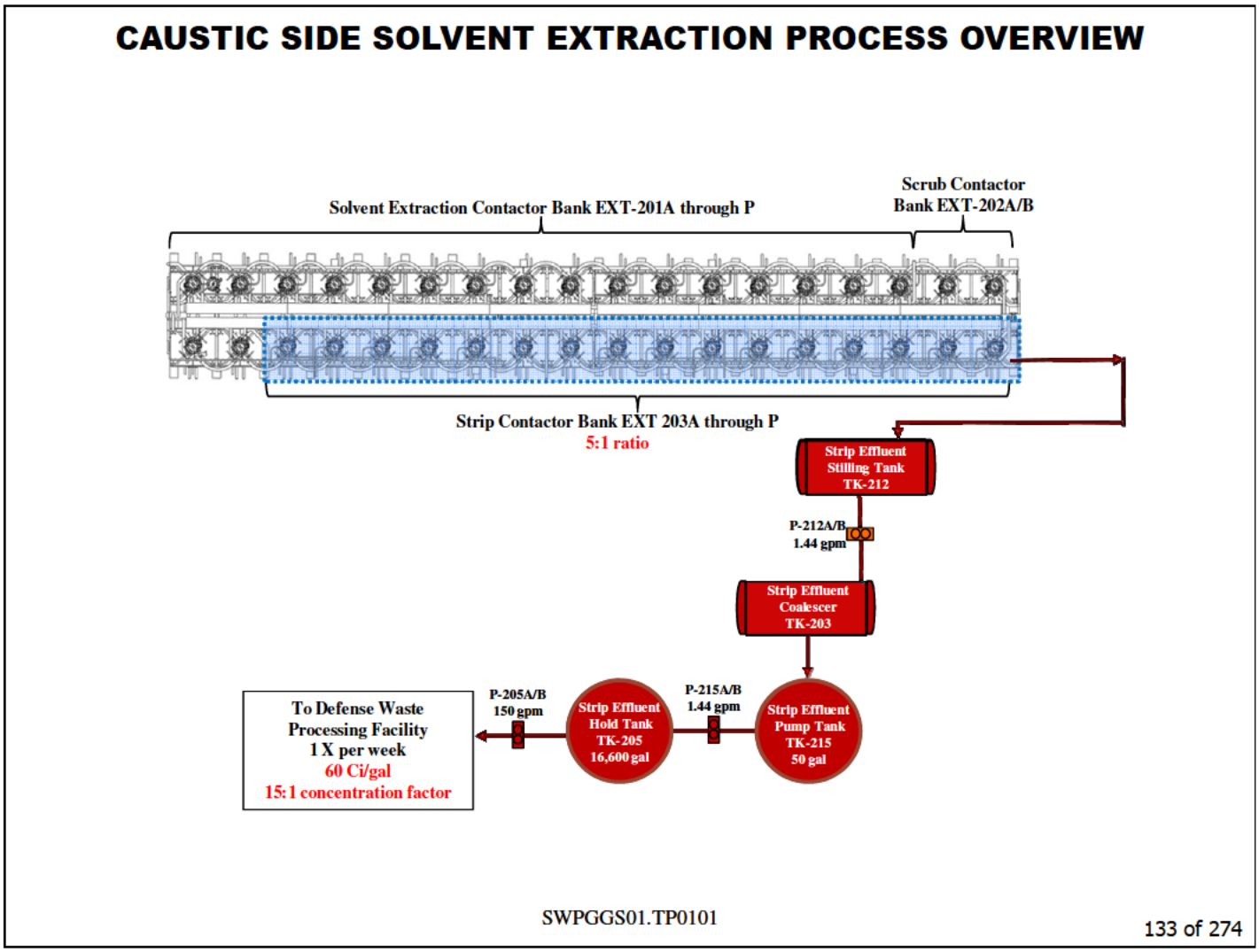

Strip Effluent Hold Tank (TK-205)

Collects and stores strip effluent until a sufficient quantity is ready to transfer to the Defense Waste Processing Facility every 7.7 days.

Strip Effluent Hold Tank (TK-205) Central Processing Area (Room 192)

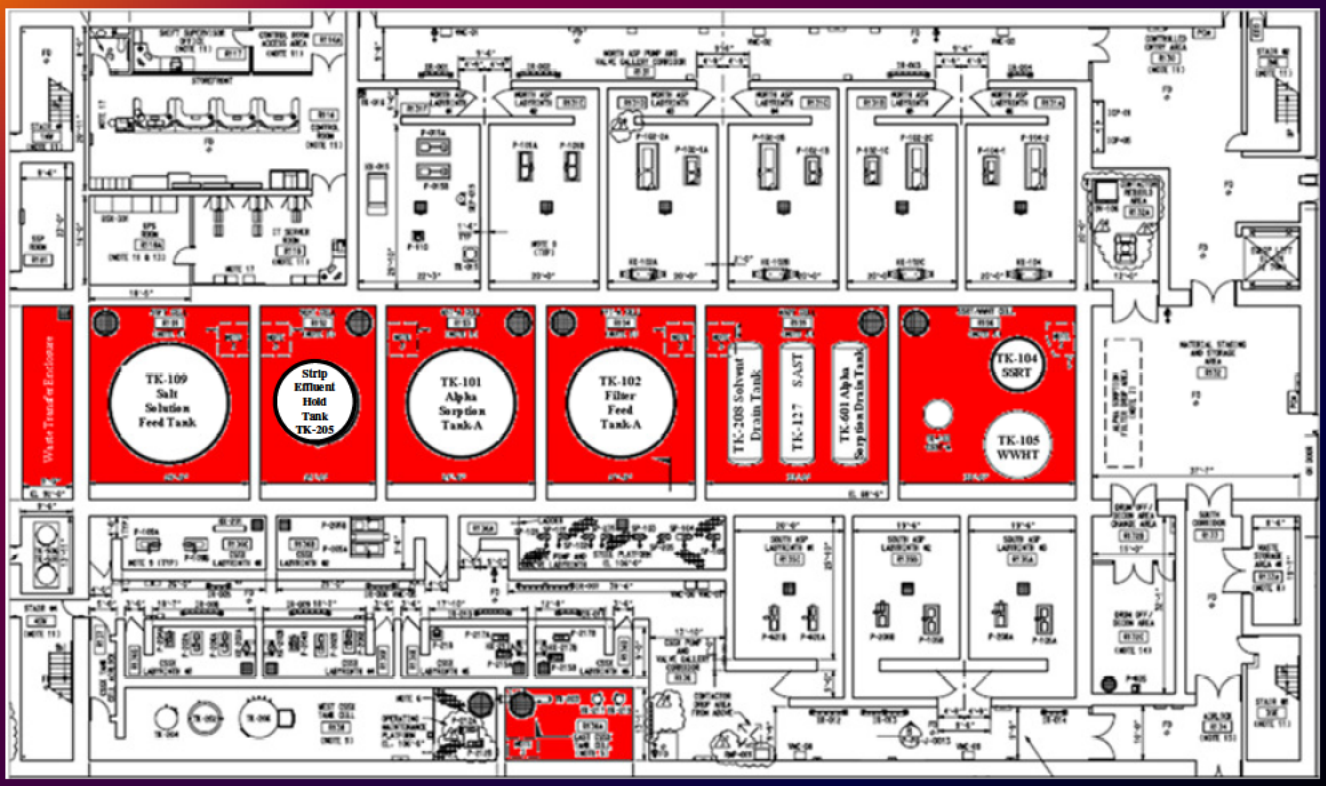

SWPGGS01.TP0101 134 of 274

Strip Effluent Hold Tank (TK-205) Location

Central Processing Area (Room 192)

Caustic Wash

Purpose

To prepare the solvent for reuse by removing impurities that may interfere with performance.

SWPGGS01.TP0101 135 of 274

Caustic Wash Purpose

The wash process is intended to remove impurities in the solvent that may interfere with solvent performance.

36 CSSX CONTACTORS

Contactor Banks arranged in order of sequence in the process:

- Cesium Extraction: 16 Extraction Contactors - Decontaminate salt solution by removing cesium using the BoBCalixC6 extractant
- Solvent Scrub: 2 Scrub Contactors – Cesium rich solvent is "scrubbed" of unwanted impurities by a dilute nitric acid solution and neutralizes any caustic carryover from extraction
- Cesium Strip: 16 Strip Contactors – Cesium is "stripped" by another dilute nitric acid solution generating strip effluent
- Caustic Wash: 2 Wash Contactors - Removes solvent degradation impurities and other contaminates

SWPGGS01.TP0101 136 of 274

Two Caustic Wash Contactors EXT-204A/B are used for the Caustic Wash

The suppressant and modifier contained in the solvent degrade over time. The suppressant (TOA) forms dioctylamine and the modifier (Cs-7SB) forms a phenolic compound. Both organic compounds. Using 0.01 - 0.3M caustic removes these impurities and neutralizes the solvent.

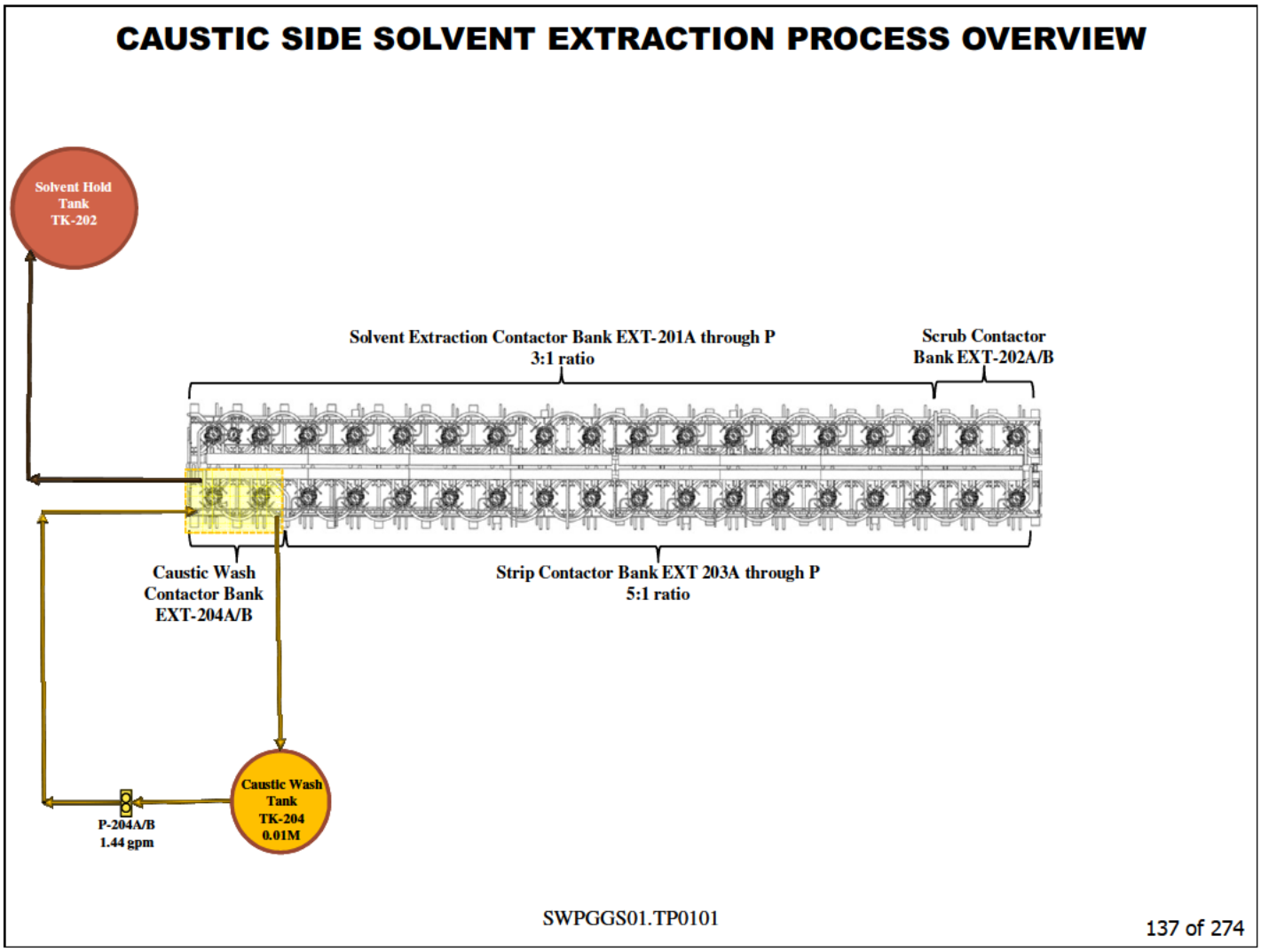

Caustic Wash Flowpath

The Caustic Wash Tank (TK-204) and one of the two Caustic Wash Tank Pumps (P-204A/B) supply 0.01 - 0.3M caustic wash solution to the wash contactor aqueous inlet.

Caustic Wash Tank (TK-204)
West CSSX Tank cell (Room 138)

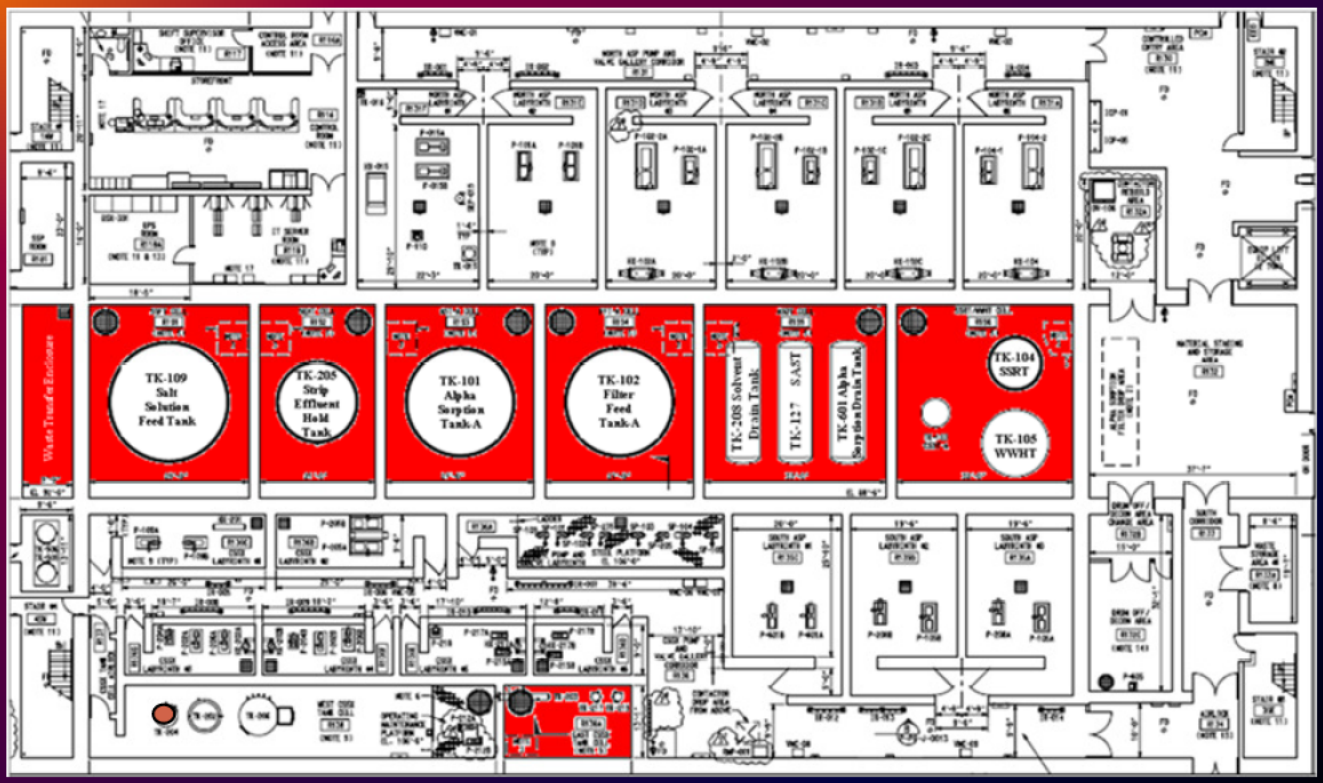

SWPGGS01.TP0101 138 of 274

Caustic Wash Tank (TK-204) Location

West CSSX Tank Cell (Room 138)
Caustic Wash is recycled and therefore may have some cesium carryover.

CONCLUSION

- Caustic Side Solvent Extraction Process is the second step in the Salt Waste Processing Facility process.
- Separates cesium (Cs) from the Clarified Salt Solution (CSS) using an extractant and V-10 contactors.

Conclusion

- Two (2) Flowpaths, Clarified Salt Solution (CSS) and solvent
- Cesium Extraction: 16 Extraction Contactors decontaminate salt solution by removing cesium using the BoBCalixC6 extractant
- Solvent Scrub: 2 Scrub Contactors scrub unwanted impurities using a 0.05M nitric acid solution
- Cesium Strip: 16 Strip Contactors strip cesium using 0.001M nitric acid solution
- Caustic Wash: 2 Wash Contactors use caustic to remove impurities and other contaminates from the solvent

Conclusion

- Recycle solvent.
- Cesium laden strip effluent sent to Defense Waste Processing Facility.
- Decontaminated Salt Solution (DSS) sent to Saltstone Facility.

Salt Waste Processing Facility
Module 5

Alpha Finishing Process Overview

SWPF Process Overview

- Waste processing occurs in three basic unit operations:
  - Alpha Strike Process (ASP)
  - Caustic-Side Solvent Extraction (CSSX)
  - Alpha Finishing Process (AFP)

Objectives

1. State the purpose of the Alpha Finishing Process
2. Describe the basic Alpha Finishing Process and flowpath
3. State where components of the Alpha Finishing Process are located
4. State the outputs of the Alpha Finishing Process

Purpose of the Alpha Finishing Process

Prior to transfer to SWPF, Tank 49 will be characterized to determine the levels of strontium and actinides. If the strontium and actinides levels are high enough that a single strike in Alpha Strike will not decontaminate to levels below the Saltstone Production Facility WAC, the SWPF will change from a MST single strike operation to a multi-strike operation.

SWPGGS01.TP0101 145 of 274

Alpha Finishing Purpose

Single Strike Mode

The Alpha finishing Facility acts as a staging facility to hold and sample DSS prior to transfer to the Saltstone Production Facility. This flow path is covered in the Caustic Side Solvent Extraction module. This module will focus on salt waste requiring multi-strikes.

Multi-Strike Mode

Prior to transfer to SWPF, Tank 49 will be characterized to determine the levels of strontium and actinides. If the strontium and actinides levels are high enough to exceed the Alpha Strike decontamination capabilities, the SWPF will change from a MST single strike operation to a multi-strike operation. The salt waste will be directed to the Alpha Finishing Facility for a second strike after it has been processed through the Caustic Side Solvent Extraction process (CSSX) Process. At this point, the salt waste has had the cesium removed and is now called Cesium Depleted Clarified Salt Solution (CDCSS). The processing of salt waste may require one, two, or more MST strikes to remove a sufficient amount of Sr/actinides from the CDCSS.

Multi-Strike Operation

During multi-strike operation the process time in AST-A is reduced from 12 hours to 6 hours.

DF Comparison of Single strike Operations to Multiple strike Operations

Single Strike Mode		Multiple Strike Mode		
12 Hour DF		First strike, 6 hr DF	Second Strike, 6 hr DF	Combined Total DF
Sr-90	20	17.0	17.0	289.0
Pu	5.5	4.7	3.9	18.3
Am	4.6	3.4	1.5	5.1
Np	2.4	2.14	1.13	2.4
U	1.35	1.3	1.3	1.7
Cm	1	1	1	1.0

Example: $\frac{100g/l}{20} = 5g/l$

SWPGGS01.TP0101 146 of 274

Target is based on the Saltstone WAC value (1.13E+04pCi/mL), with **the 1.2 dilution factor and no DF applied**

(DF = 1.0).

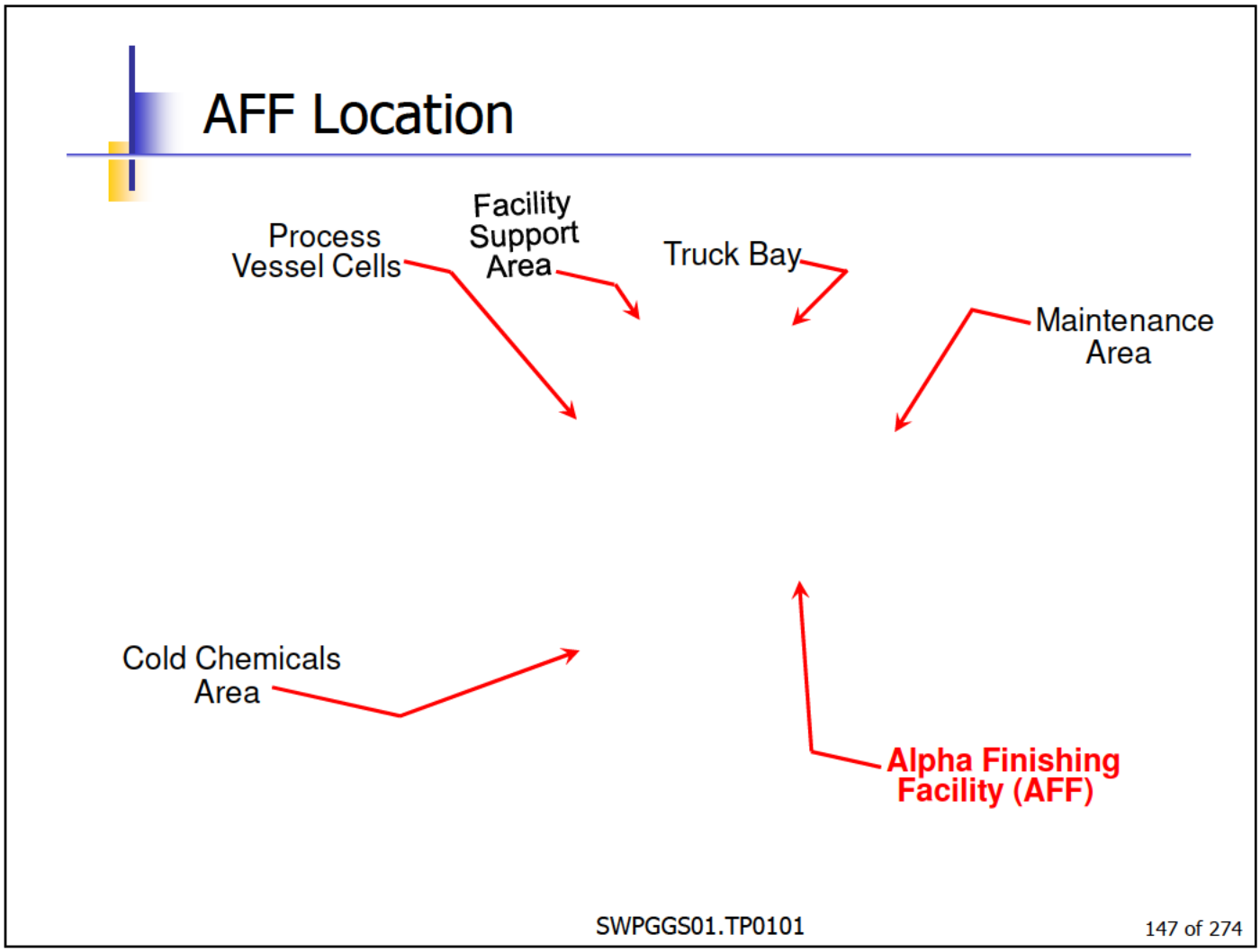

AFF Location

Located on the Southeast corner of the process building

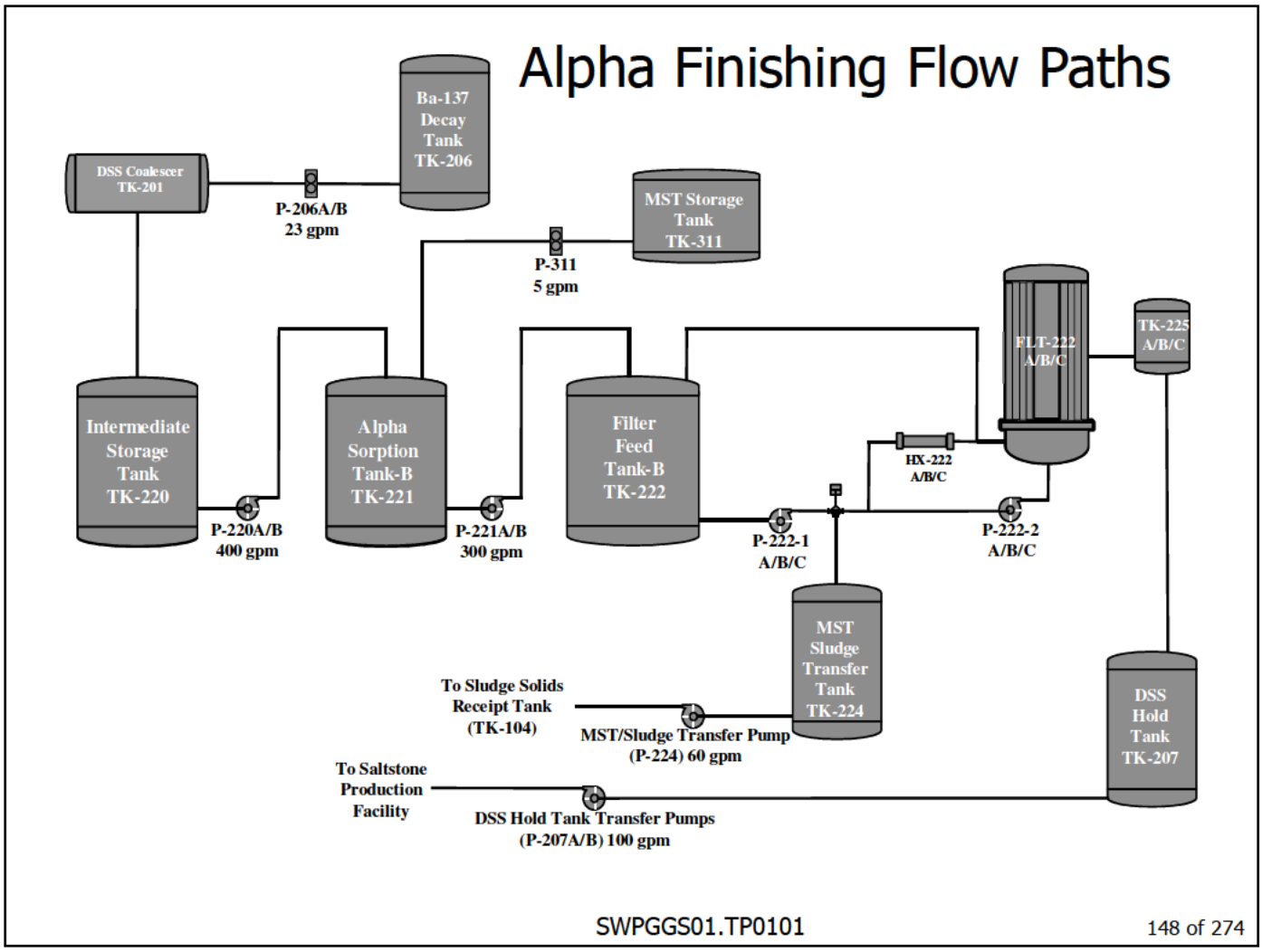

Alpha Finishing Flowpath Overview

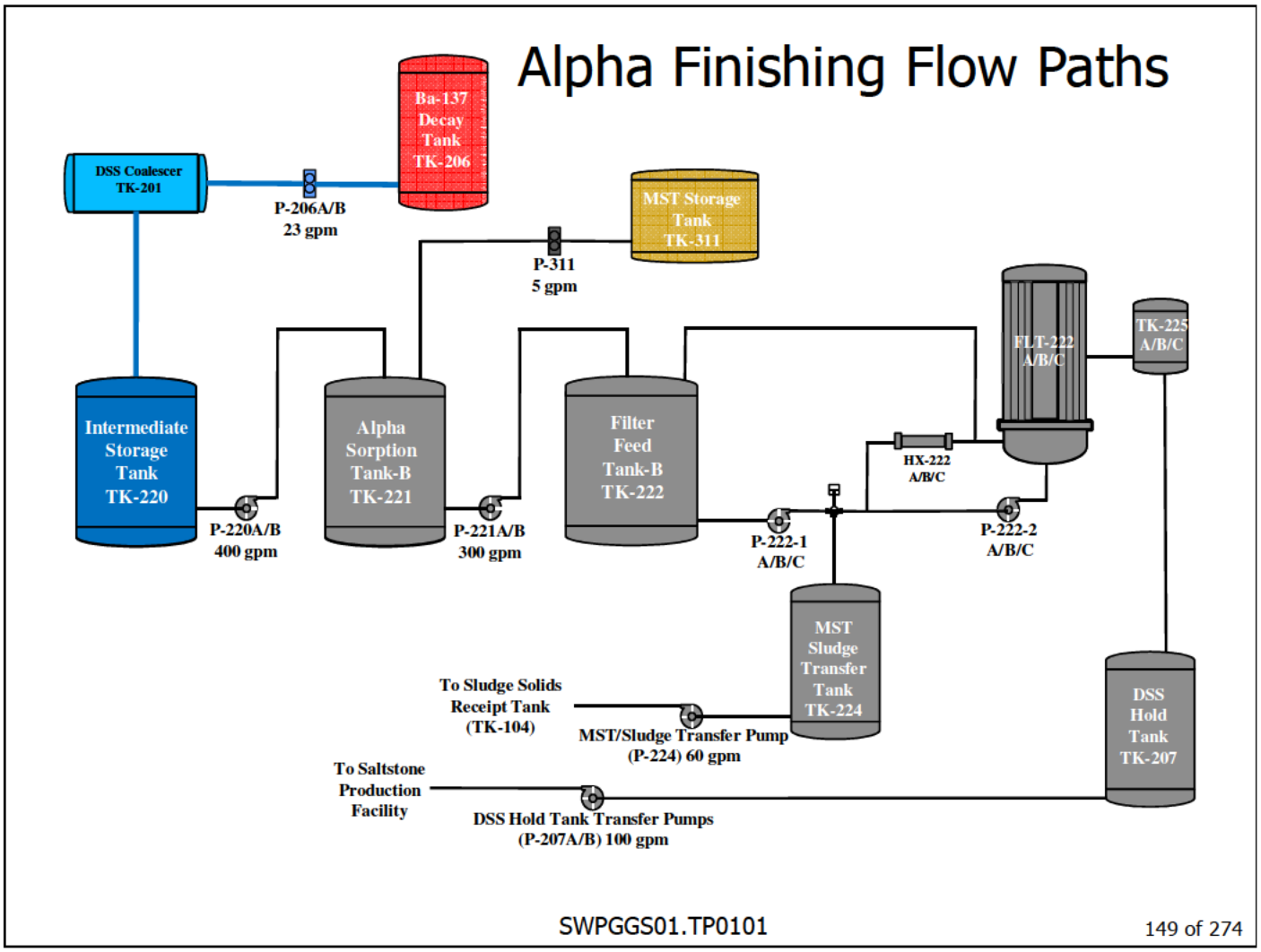

Receiving CDCSS into AFF

In multi-strike operations, CDCSS in the Ba-137 Decay Tank (TK-206) is pumped on a continuous basis by one of the two Ba-137 Decay Tank Transfer Pumps (P-206A/B) through the DSS Coalescer (TK-201) at a 23 gpm. CDCSS from the DSS Coalescer will gravity-flow to the IST (TK-220).

BA-137 DECAY TANK TK-206

WEST CSSX TANK CELL (ROOM 138)

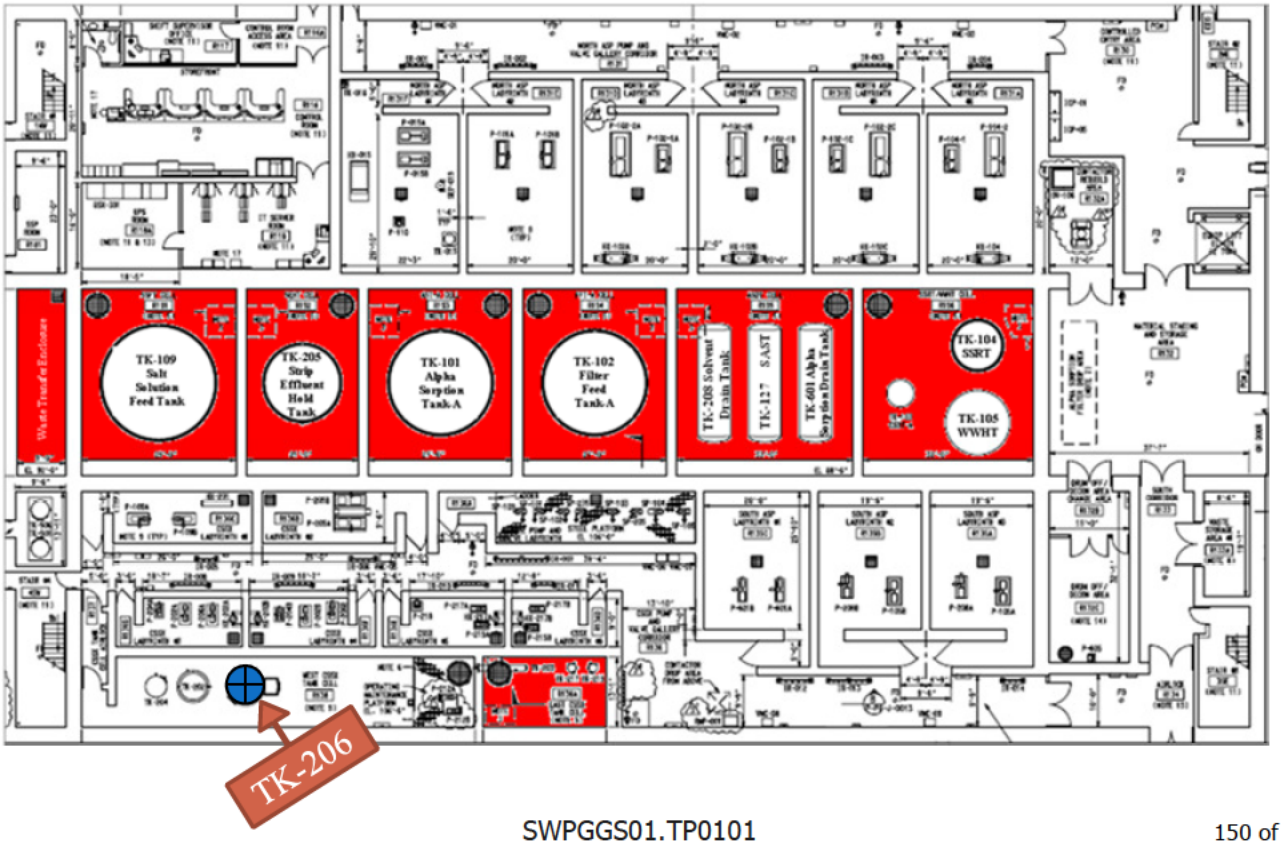

SWPGGS01.TP0101 150 of 274

Ba-137 Decay Tank Location

CPA, West CSSX Tank Cell (Room 138)

DSS COLESCER TK-201

MAINTENANCE ACCESS PLATFORM (ROOM 251)

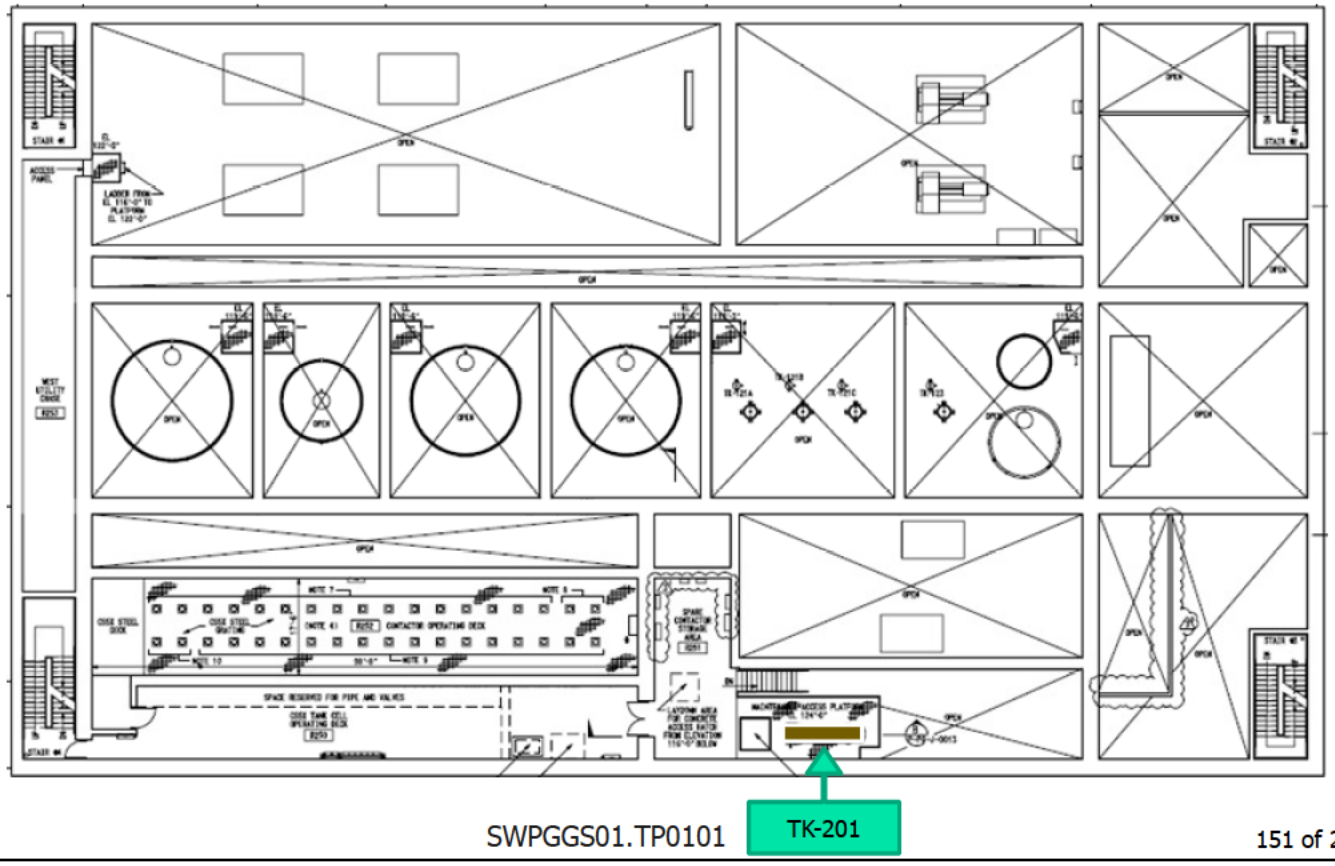

SWPGGS01.TP0101 151 of 274

DSS Coalescer Location

CPA, Maintenance Access Platform (Room 251)

INTERMEDIATE STORAGE TANK (TK-220)
ALPHA FINISHING FACILITY

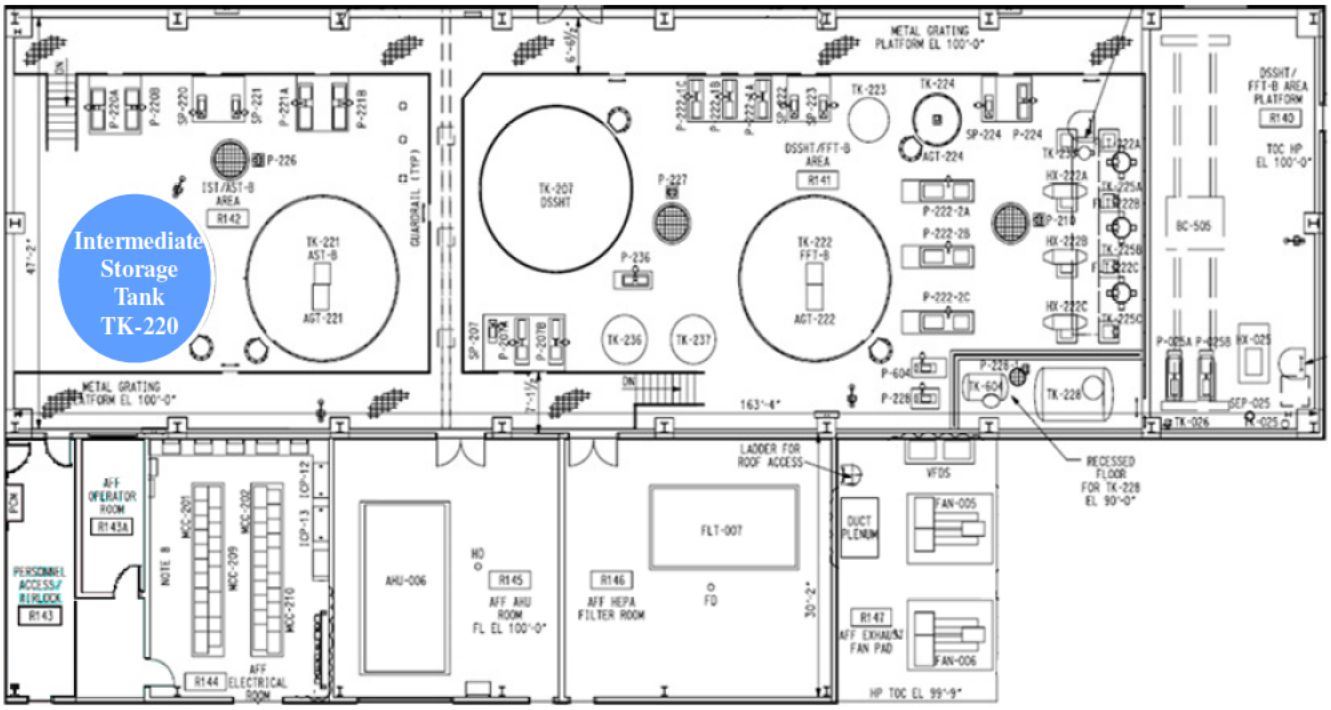

SWPGGS01.TP0101 152 of 274

IST (TK-220) Location

Alpha Finishing Facility (Room 142)

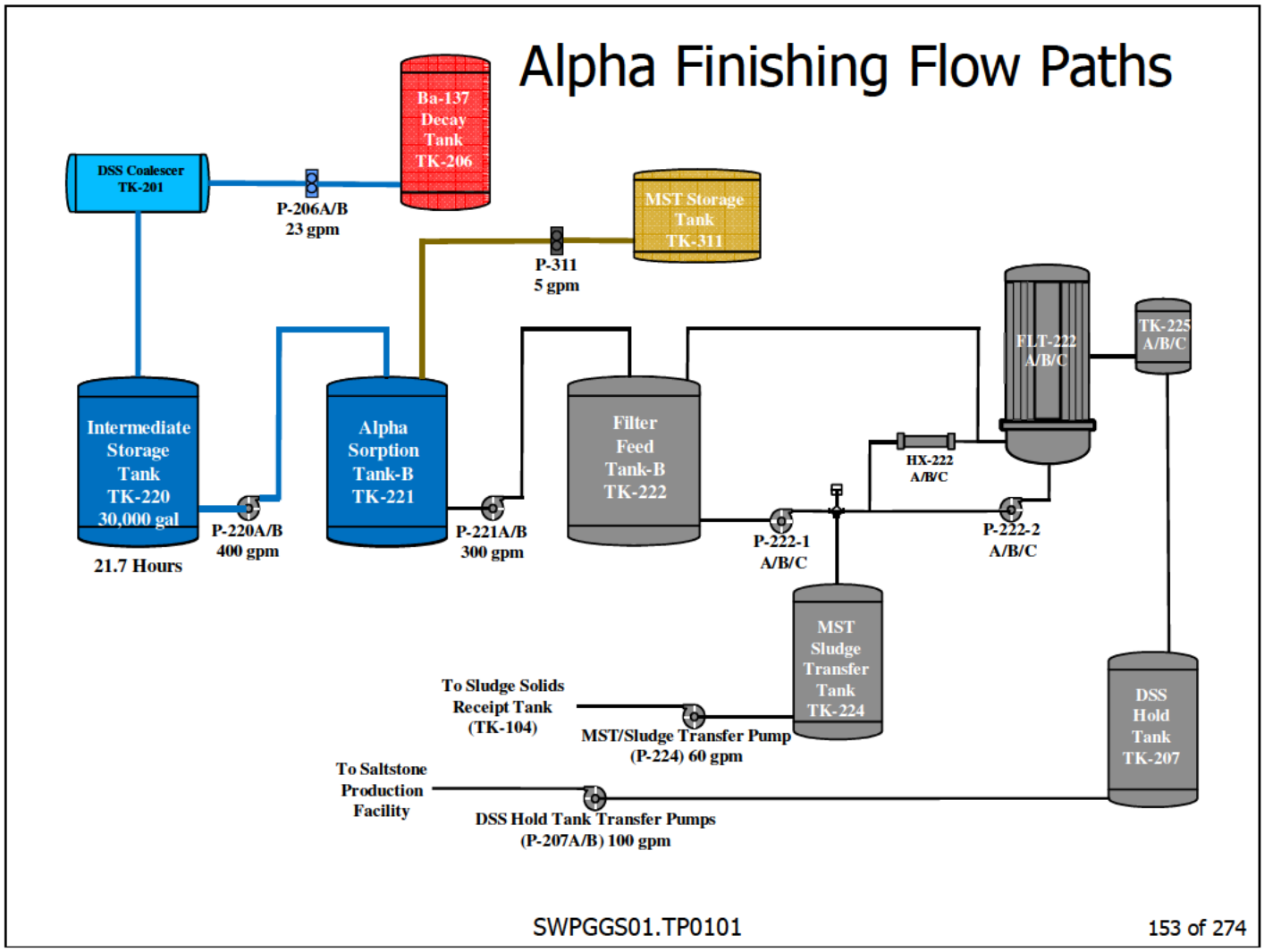

MST Strike

Once a batch of approximately 30,000 gallons has accumulated in the Intermediate Storage Tank (IST), about 21.7 hours, the CDCSS is transferred to Alpha Sorption Tank-B (AST-B) (TK-221) using the Intermediate Storage Tank Transfer Pumps P-220A/B at a rate of 400 gpm to perform a second MST strike.

The IST will continue to receive feed from the Ba-137 Decay Tank. Once the AST-B has received the CDCSS, the transfer from the IST is terminated and an additional MST strike is performed in AST-B to adsorb Sr and actinides.

Approximately 75 gallons of MST is required to attain the proper concentration. The AST-B (TK-221) contents are mechanically agitated (AGT-221) for six hours, after which a sample will be taken and filtered in the laboratory to ensure that the batch will meet the SPF WAC. If WAC limits are not met, additional strikes can be performed or material can be recycled to the ASP section for additional processing.

AST-B (TK-221)

ALPHA FINISHING FACILITY

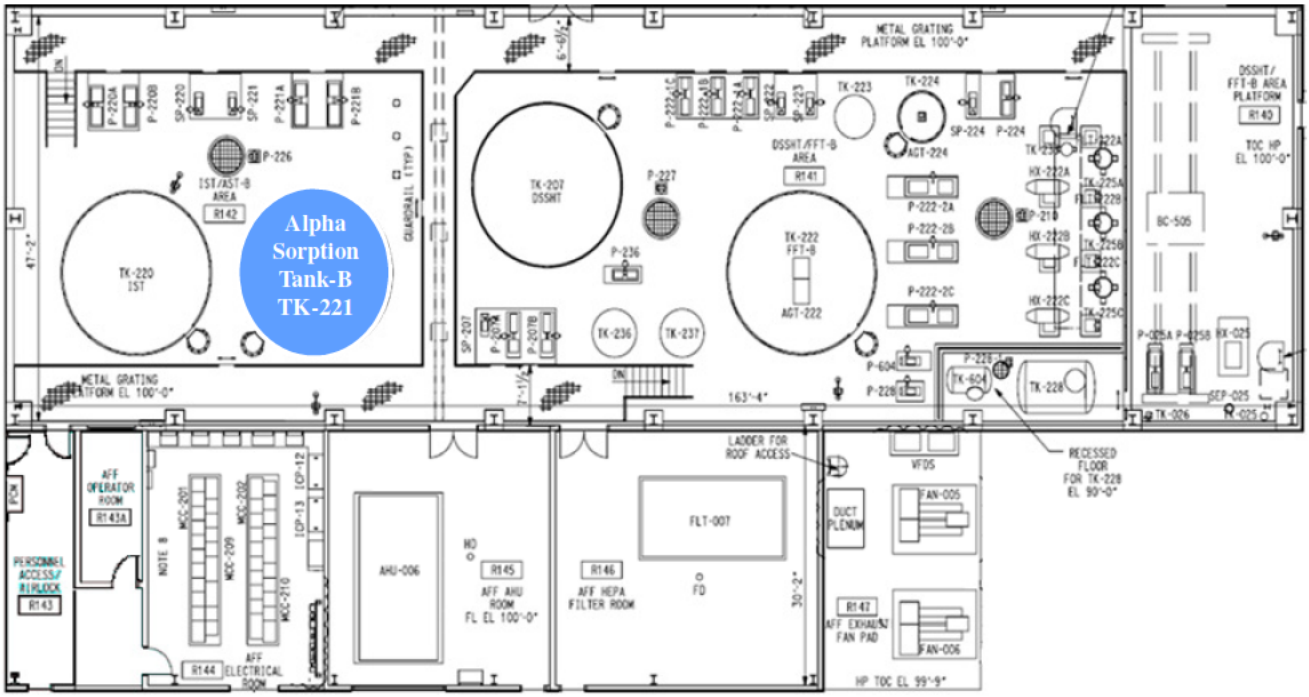

SWPGGS01.TP0101 154 of 274

AST-B (TK-221) Location

Alpha Finishing Facility (Room 142)

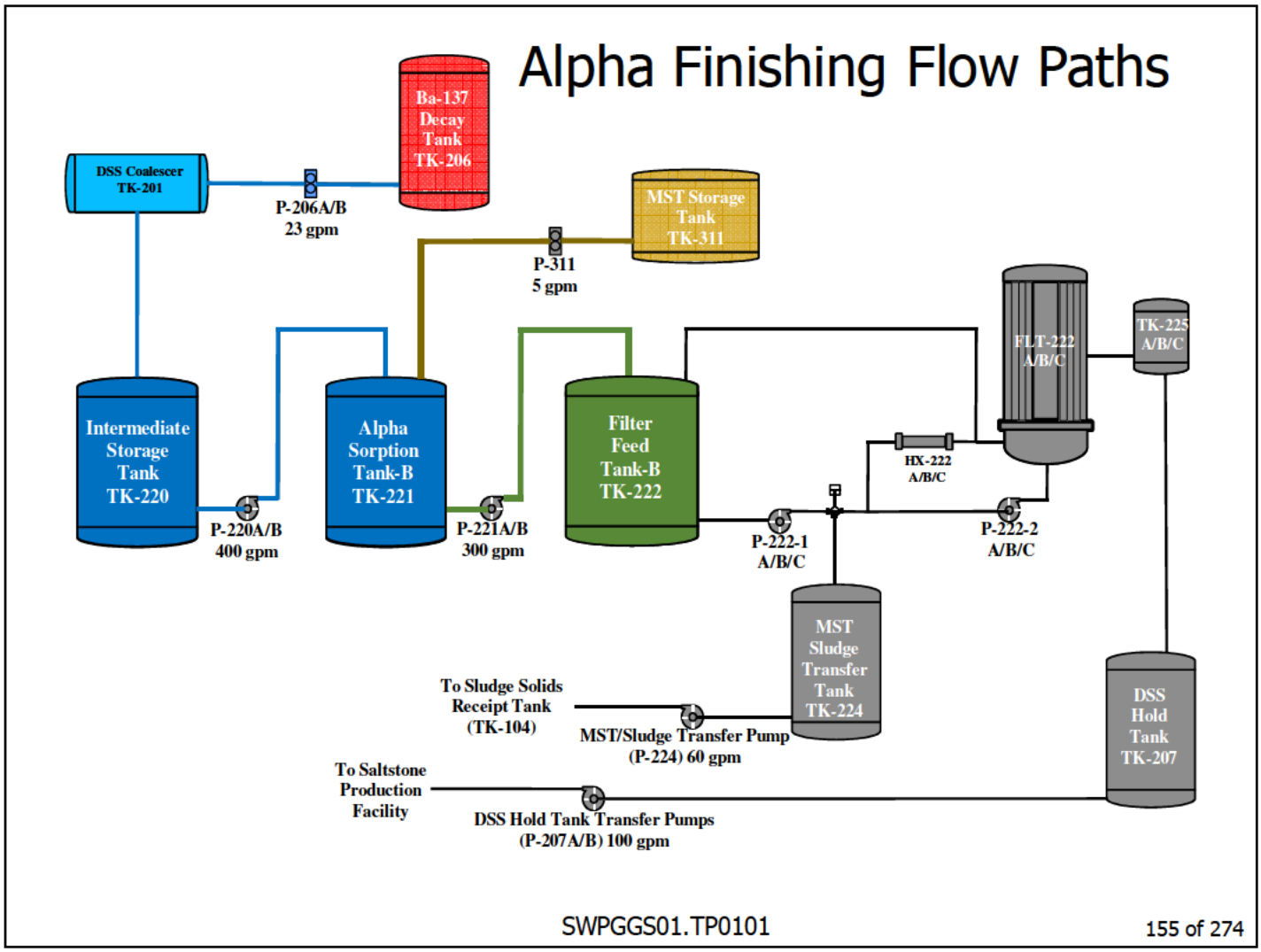

Transfer to FFT-B for Filtration

After striking with MST, the contents of Alpha Sorption Tank-B are transferred to the Filter Feed Tank-B for filtration. The FFT-B System only operates in multi-strike mode. The FFT-B receives batches of MST slurry from AST-B at a rate of 300 gpm, using the AST-B Transfer Pumps (P-221A/B). FFT-B uses a mechanical agitator to help ensure that the solids are suspended.

Once the transfer of the contents from Alpha Sorption Tank-B (TK-221) to the Filter Feed Tank-B (TK-222) has been completed, the AST-B will be refilled with CDCSS from the Intermediate Storage Tank (TK-220) and is struck with MST.

FFT-B (TK-222)

ALPHA FINISHING FACILITY

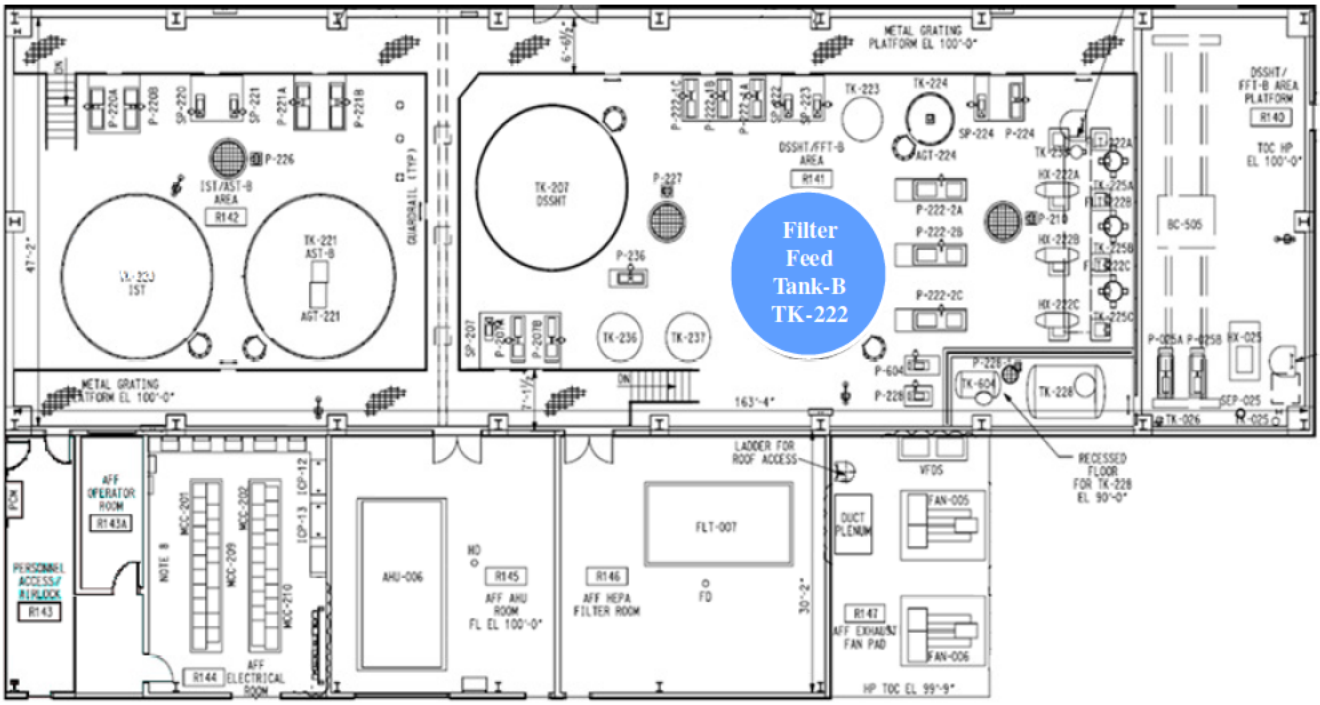

SWPGGS01.TP0101 156 of 274

FFT-B (TK-222) Location

Alpha Finishing Facility (Room 141)

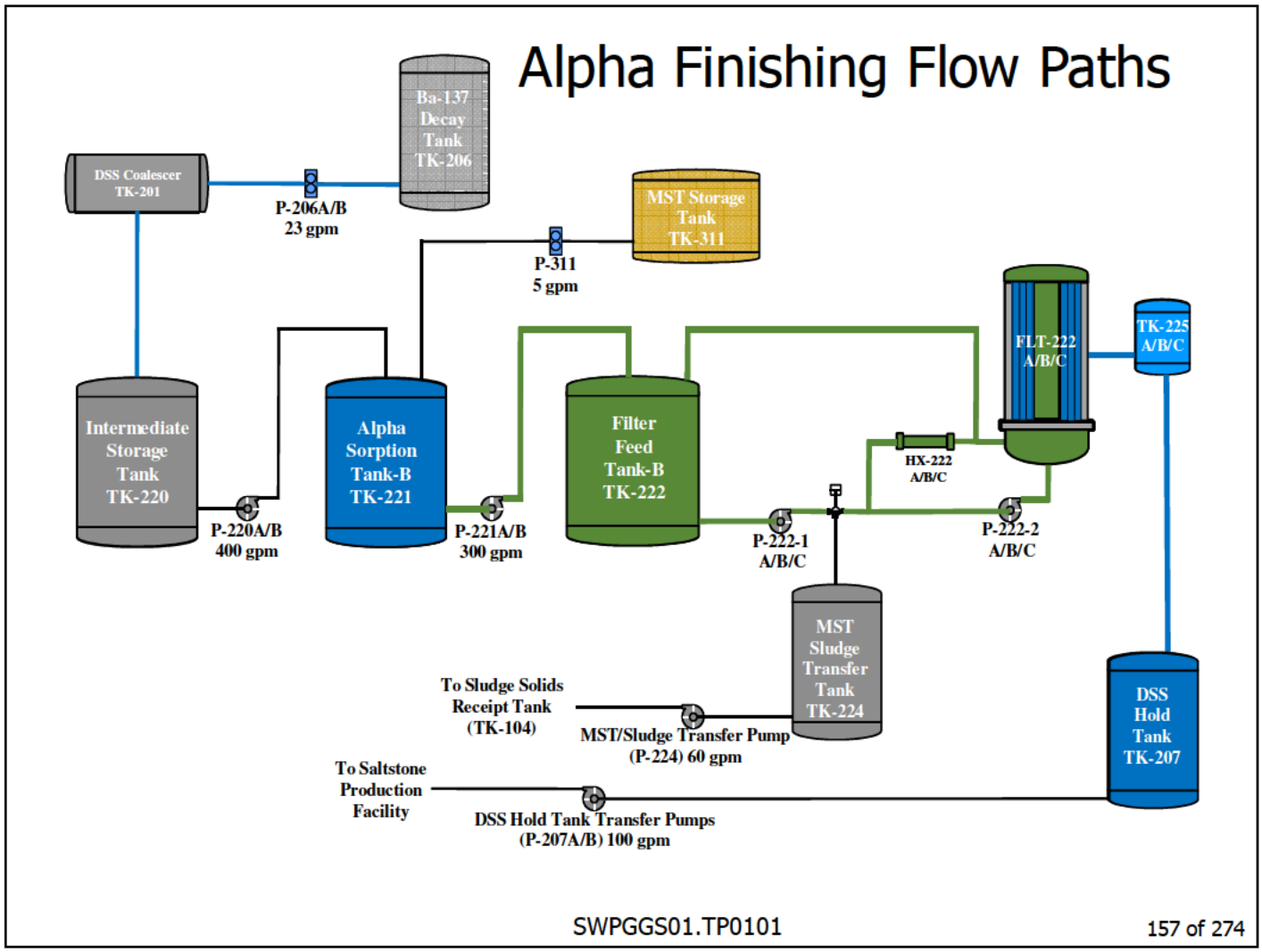

AFF Filtration Circuit (FLT-222A/B/C)

The operator will select two of the three Alpha Finishing Filter circuits (FLT-222A/B/C) for the filtering operation. The third filter will be in a standby mode. Heat exchanger HX-222A/B/C will maintain fluid temperature of the filtration circuit at ≈ 73°F. Filtration will concentrate the contents of the FFT-B down to 2,800 gallons. At this time, filtration will be stopped and the FFT-B will be refilled from the AST-B.

AFF FILTER CIRCUITS

ALPHA FINISHING FACILITY

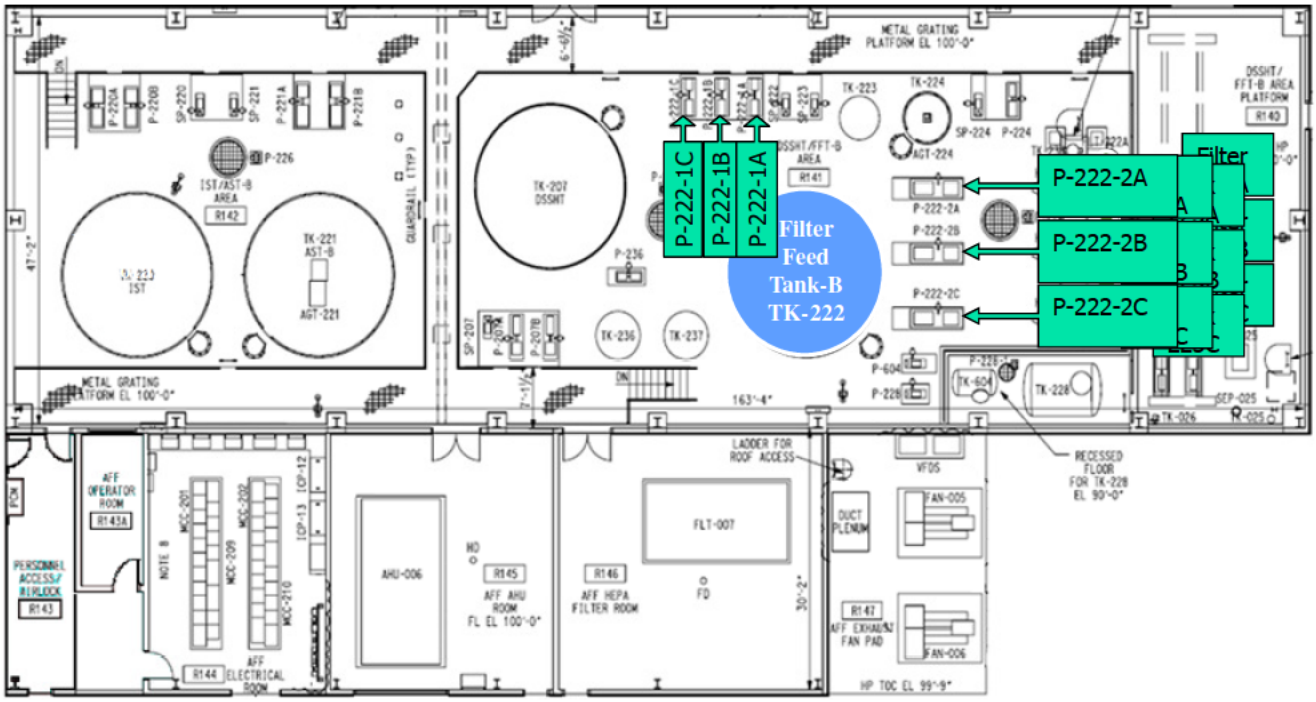

SWPGGS01.TP0101 158 of 274

AFF Filter circuit FLT-222A/B/C and associated equipment Location

Alpha Finishing Facility (Room 141)

FFT-B (TK-222)

ALPHA FINISHING FACILITY

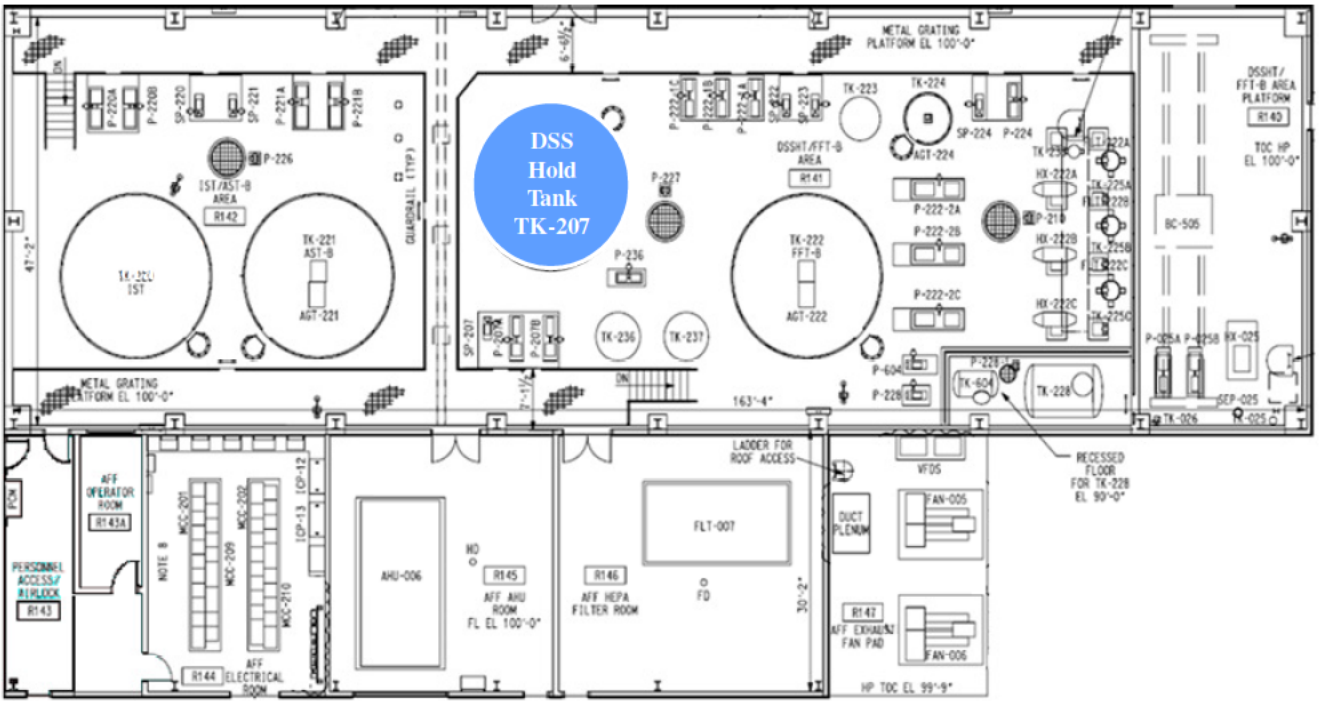

SWPGGS01.TP0101 159 of 274

DSS Hold Tank (TK-207) Location

Alpha Finishing Facility (Room 141)

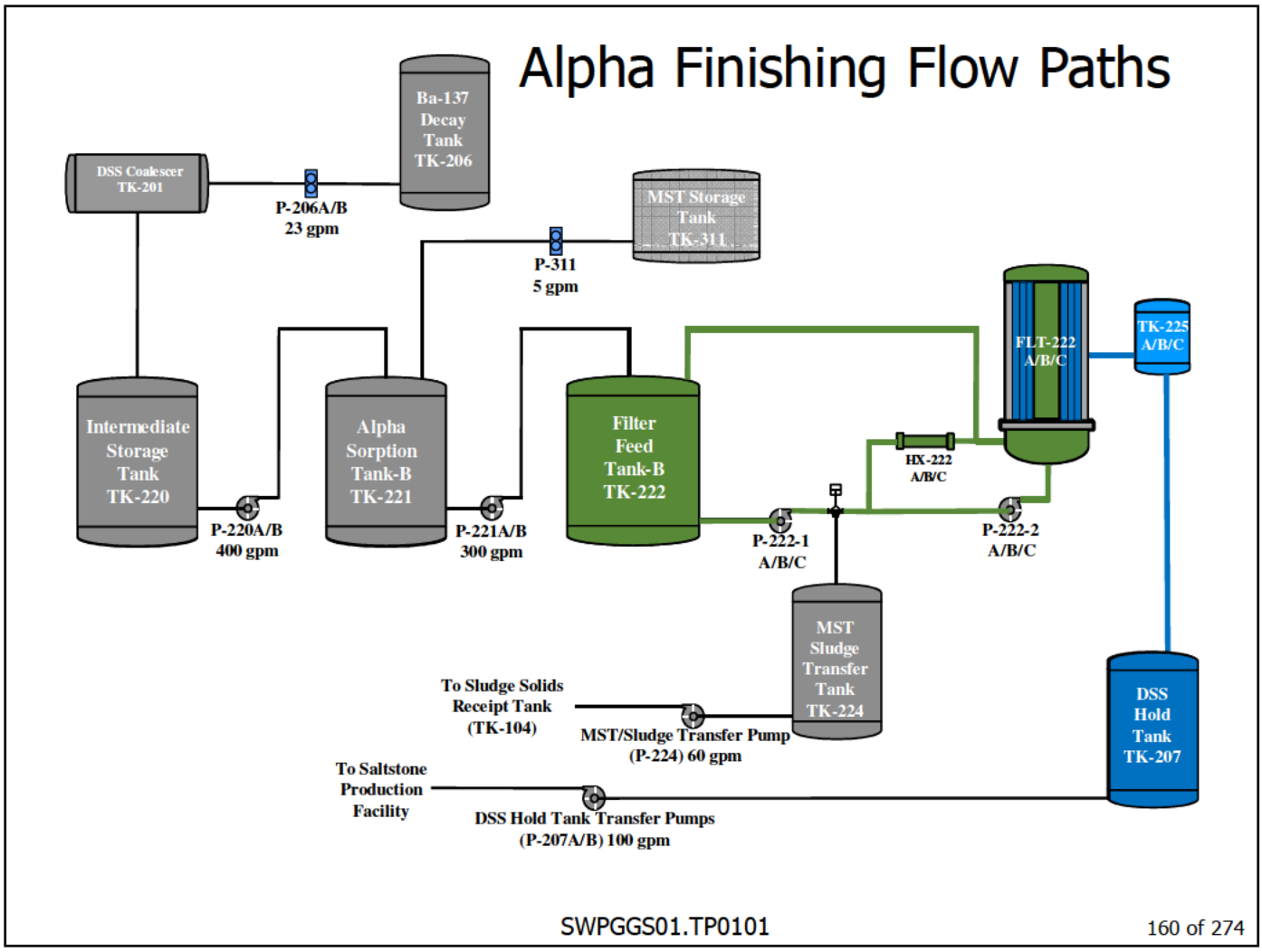

Filter Seven Batches

Filtration will continue for seven batches. At this point, a sample is taken to determine the final concentrating endpoint to achieve 5 wt% solids concentration.

As the MST slurry concentration approaches the target concentration of 5 wt%, one of the filters will be taken out of operation. The remaining filter completes the task of concentrating the slurry. The endpoint is estimated at approximately 1,400 gallons remaining in FFT-B.

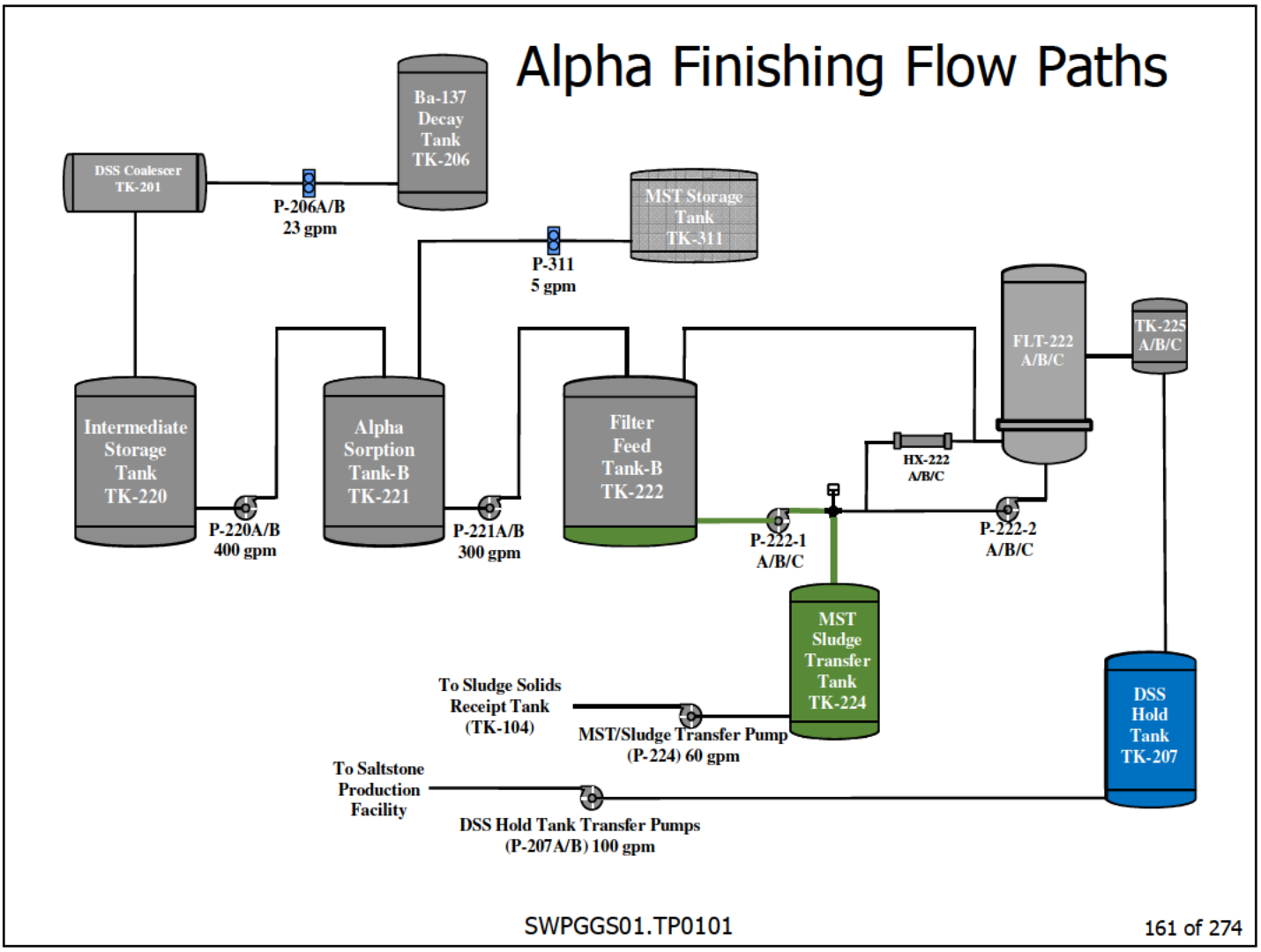

MST Sludge Transfer Tank (TK-224)

The concentrated batches from FFT-B are then transferred to the MST Sludge Transfer Tank (MSTT) (TK-224) prior to being transferred to the Sludge Solids Receipt Tank (TK-104) for washing (primary path) or AST-A for use in the Alpha Sorption Process (secondary path). The MSTT provides a working volume of 1,600 gallons, based on receiving seven batches from FFT-B plus line flush.

MST/SLUDGE TRANSFER TANK (TK-207)

ALPHA FINISHING FACILITY

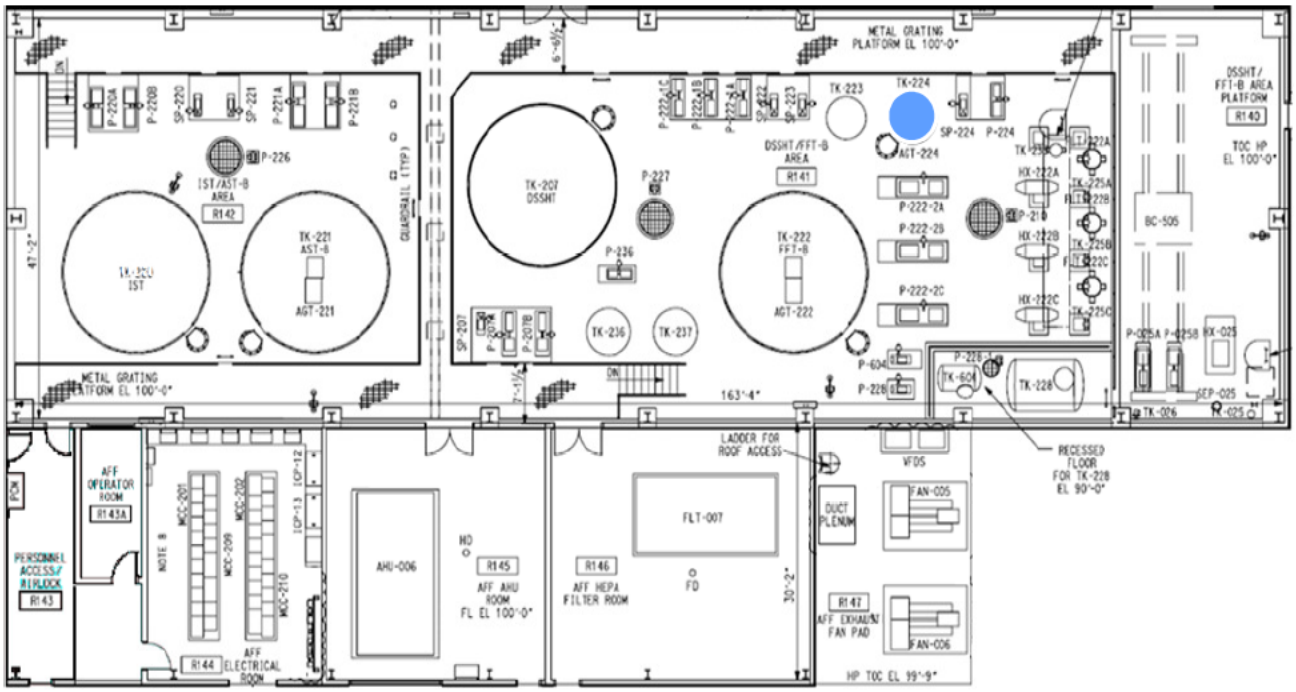

SWPGGS01.TP0101 162 of 274

MST/Sludge Transfer Tank (TK-224) Location

Alpha Finishing Facility (Room 141)

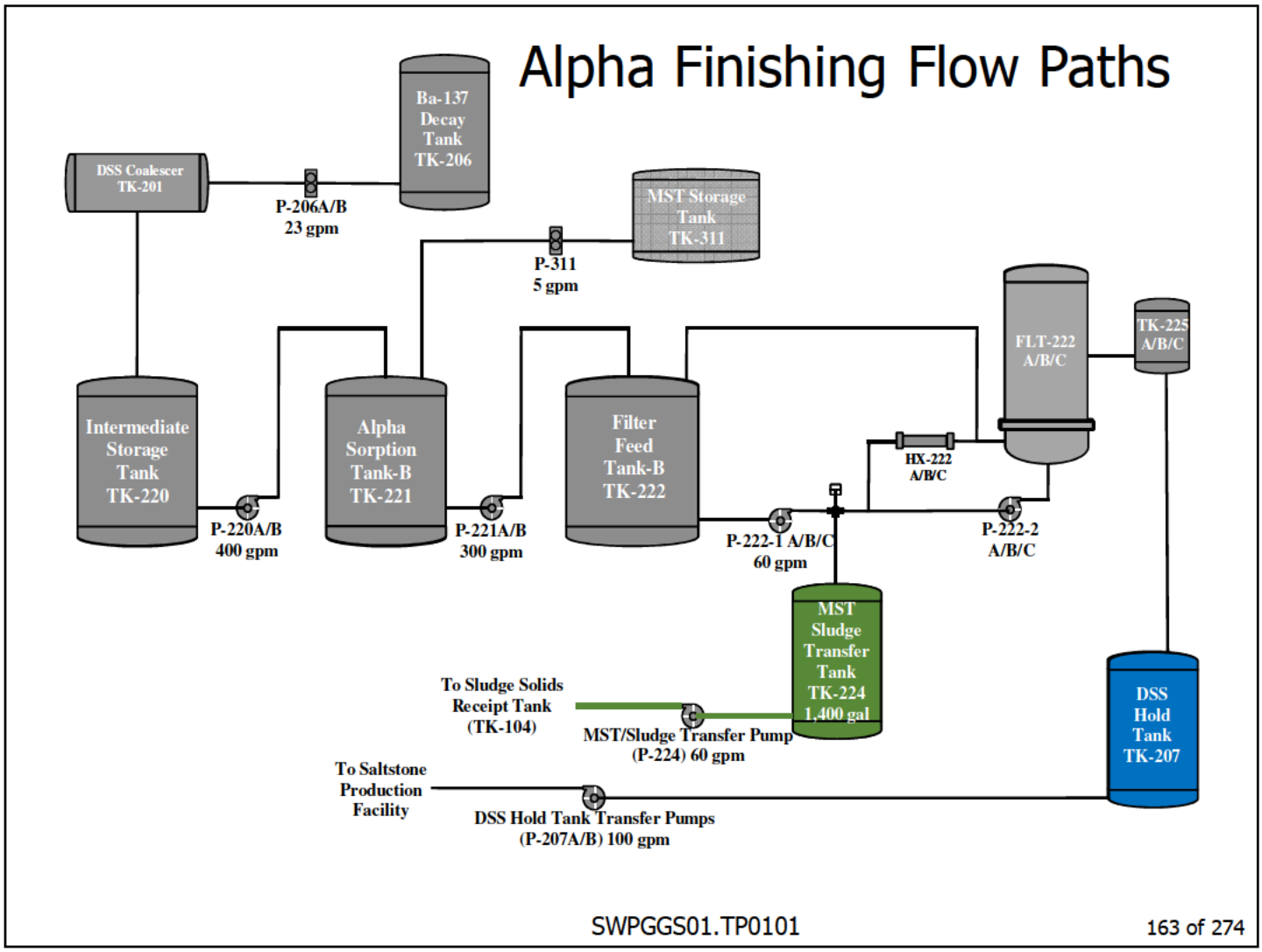

Transfer MST/Sludge to SSRT

MST/Sludge in the MST/Sludge Transfer Tank will then be transferred to the Sludge Solids Receipt Tank (TK-104) via P-227 at 60 gpm where it will be washed and prepared for transfer to DWPF as mentioned in the Alpha Strike Module.

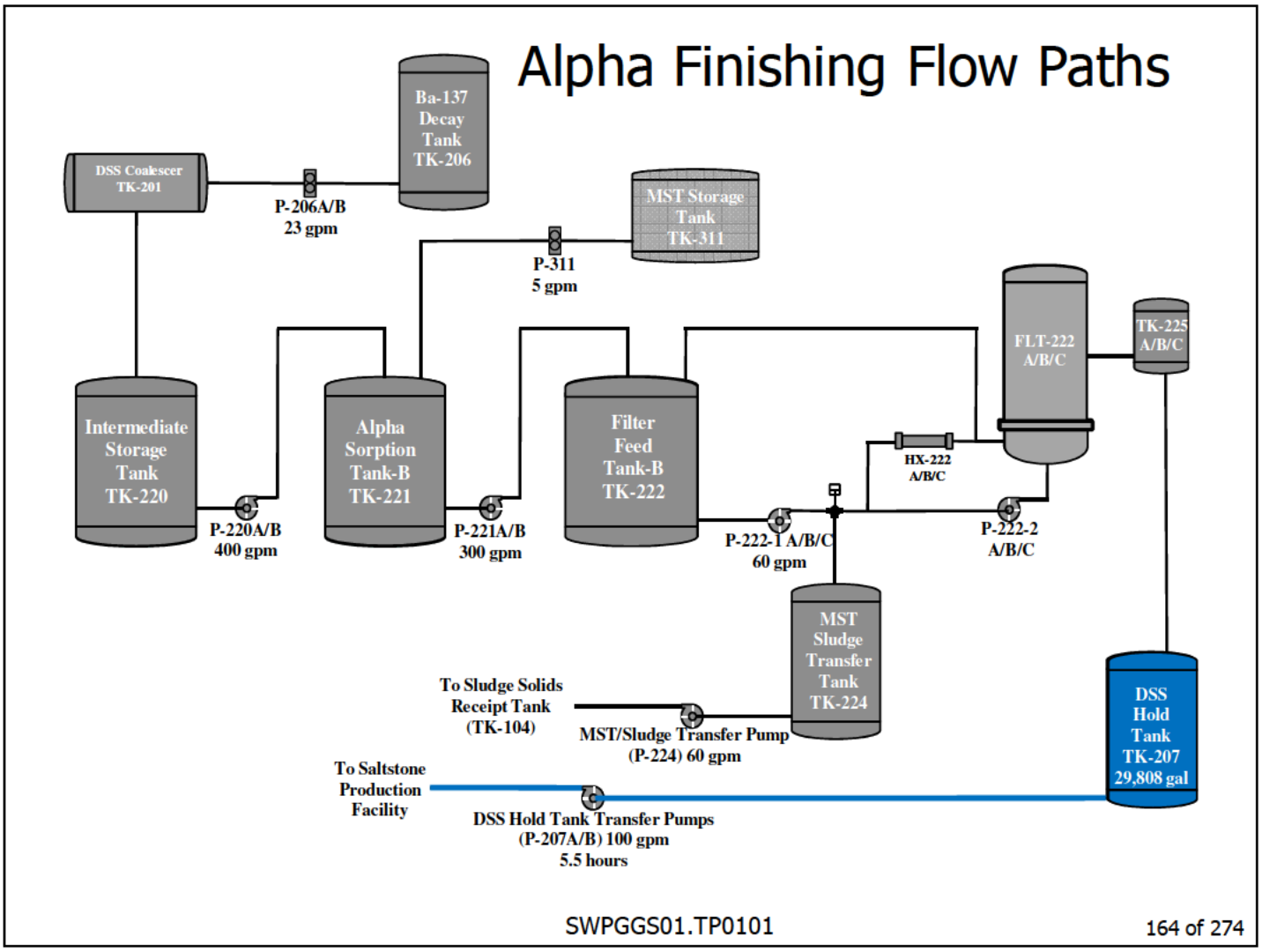

Transfer DSS to SPF

At a design DSS production rate of 23 gpm, the DSS produced after 24 hours of operation would be approximately 33,000 gallons. The DSSHT has been conservatively sized to provide a working volume of 35,900 gallons (approximately 26 hours of DSS production). Typically 29,808 gal of DSSHT contents will be transferred to the SPF approximately once every 21.6 hours.

One of the two DSSHT Transfer Pumps (P-207A/B) will be used to transfer DSS to the SPF at 100 gpm. Transfer time is 5.5 hours.

Alpha Finishing Process Conclusion

- Purpose
- Process flowpath
- Components are located
- Process outputs

SWPGGS01.TP0101 165 of 274

Conclusion

- The purpose of the Alpha Finishing Process is to perform MST multi-strike operation if the strontium and actinides levels are high enough to exceed the Alpha Strike decontamination capabilities
- Alpha Finishing Process flow paths and component locations
- Outputs of the Alpha Finishing Process

Salt Waste Processing Facility
MODULE 6
Cold Chemicals Facility Overview

Objectives

1. State the purpose of the Cold Chemicals Facility
2. List the six (6) Cold Chemicals Systems
3. State the purpose of each Cold Chemical System
4. Describe each Cold Chemical System flow path
5. State where the Cold Chemical Facility and components of each systems are located

Purpose of the Cold Chemicals Facility (CCF)

- To receive process chemicals from outside vendors
- Verify the chemicals received are correct
- Places the chemicals in the appropriate storage area or tank, dilute if necessary
- Transfer chemicals for use in the main processes of the Salt Waste Processing Facility (SWPF)

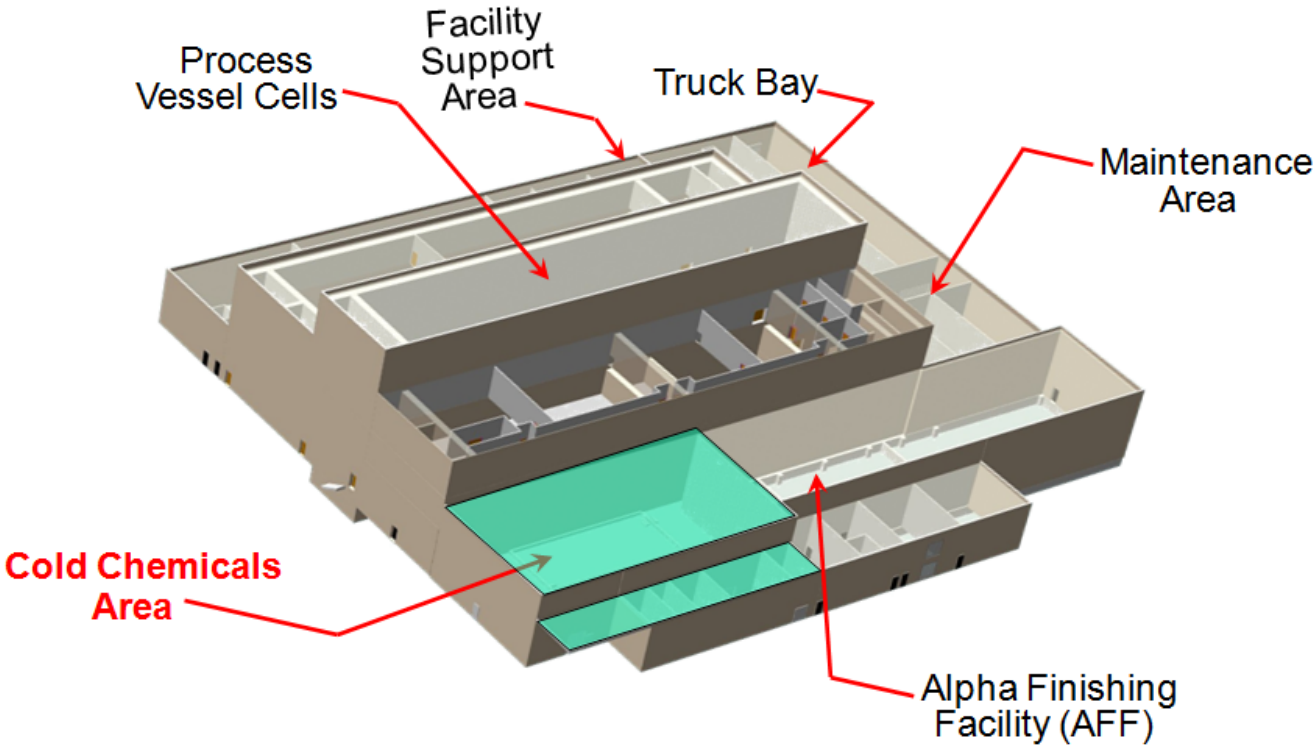

CCF location

The Cold Chemicals Facility is a steel structure adjacent to the southwest portion of the Process Building.

The Cold Chemicals Facility Description

- Consists of one large room to house tanks, pumps, and supporting equipment
- Full and empty drums are stored in segregated areas in the CCA, with appropriate spill containment
- Tanks for caustic, acid, and solvent are segregated within diked areas

Cold Chemicals Facility Support Areas

Located adjacent to and immediately south of the main chemical storage and handling areas.

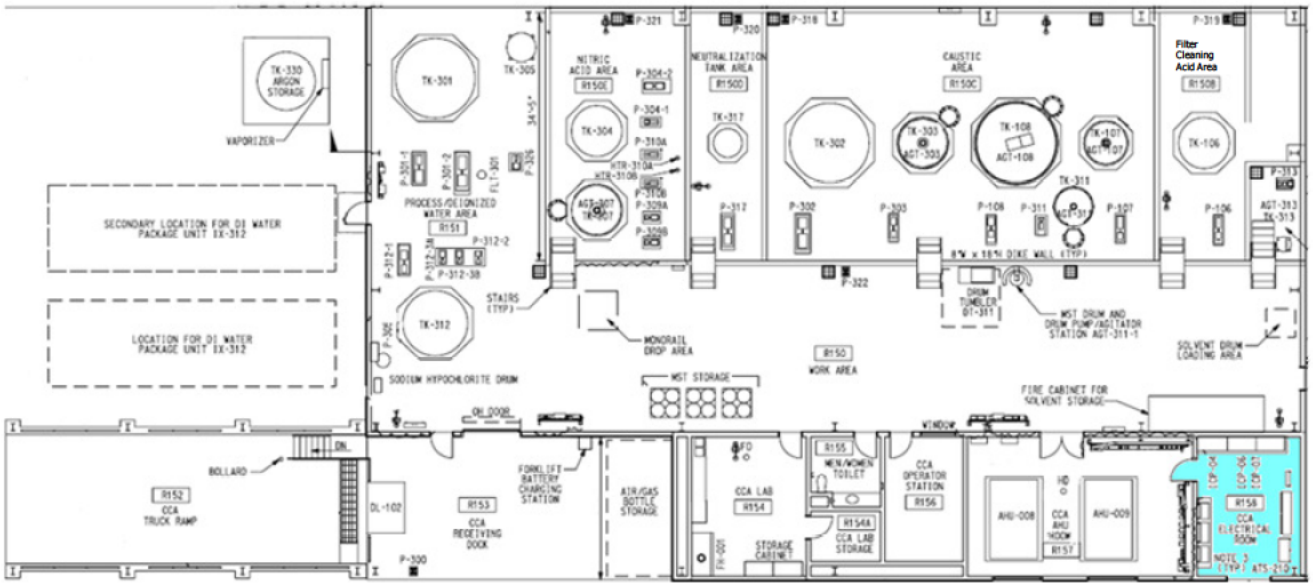

SWPGGS01.TP0101 171 of 274

Cold Chemicals Facility Support Areas

•The Cold Chemicals Truck Ramp (Room 152),

Nitric acid and Sodium hydroxide (caustic) are delivered to the SWPF via tanker trucks.

To prevent the inadvertent mixing of chemicals, each delivery is tested to ensure it meets the chemical requirements before transfer and truck hose connections to the SWPF are different for each of the three chemicals.

- Nitric Acid (HNO_3) – 1”
- Sodium Hydroxide (NaOH) (caustic) – 2”

•Receiving Dock (Room 153),
•Cold Chemicals Laboratory (Room 154),
•CCA Operator Station (Room 156),
•CCA Air Handling Unit (AHU) Room (Room 157), and
•CCA Electrical Room (Room 15)

Cold Chemicals Systems

- Sodium Hydroxide (NaOH) (caustic)
- Nitric Acid (HNO_3)
- Monosodium Titanate (MST)
- Filter Cleaning Acid
- Solvent
- Sodium Hypochlorite (NaOCl)

SWPGGS01.TP0101 172 of 274

<u>There are six (6) Cold Chemical Systems</u>

Each chemical has a very specific function and flowpath in the SWPF process.

Sodium Hydroxide (NaOH) System

Purpose is to receive and prepare sodium hydroxide for:

- Sodium molarity adjustment of
  - Alpha Sorption Tank-A (AST-A) (TK-101),
  - Alpha Sorption Drain Tank (ASDT) (TK-601)
- Chemical cleaning of Cross Flow Filters (ASP and AFP),
- Supply CSSX Caustic wash contactors
- Neutralization of:
  - Strip Effluent Hold Tank (SEHT) (TK-205),
  - Sludge Solids Receipt Tank (SSRT) (TK-104),
  - Neutralization Tank (TK-317), and
- Miscellaneous line/equipment flushes

SWPGGS01.TP0101 173 of 274

Sodium Hydroxide (NaOH) (caustic) System Purpose

The purpose of the Sodium Hydroxide System is to receive, prepare, and store sodium hydroxide (NaOH) primarily for use in the Alpha Strike Process (ASP) to adjust the sodium ion (Na^+) molarity of the incoming salt waste.

It is also used for:

- Chemical cleaning of the cross-flow filters (CFFs)
- Caustic wash solution for Caustic-Side Solvent Extraction (CSSX) Process, and
- Neutralization of the:
  - Strip Effluent Hold Tank,
  - Sludge Solids Receipt Tank, and the
  - Neutralization Tank.

It is also used for miscellaneous line/equipment flushes.

Sodium Hydroxide (NaOH) System Flow-path

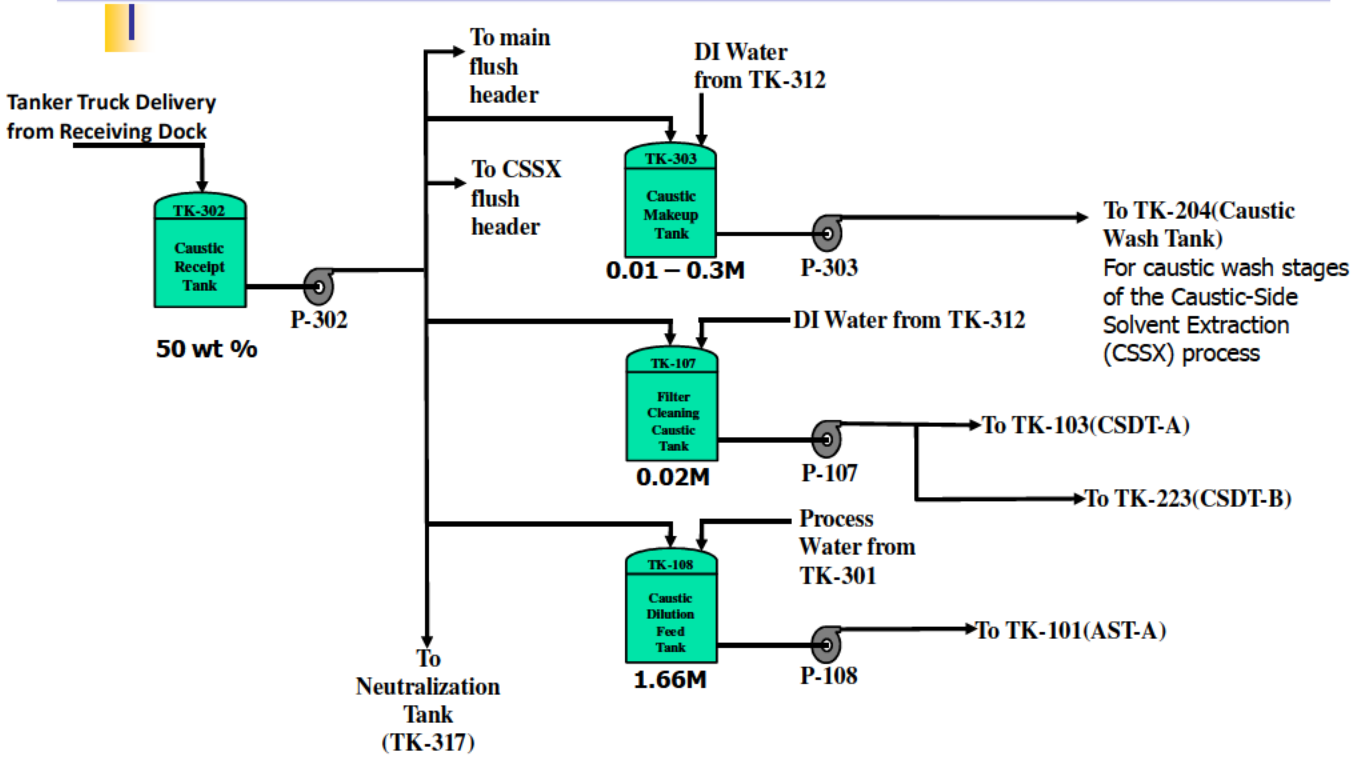

Sodium Hydroxide (NaOH) (caustic) Flow Path

Tanker trucks will deliver the 50 weight percent (wt %) sodium hydroxide (NaOH) to the Cold Chemicals Area (CCA) Receiving Dock where it will be transferred to the 9600 gal Caustic Receipt Tank (TK-302). The sodium hydroxide (NaOH) is then transferred from the Caustic Receipt Tank (TK-302) to the following areas:

Caustic Makeup Tank (TK-303)

In the Caustic Makeup Tank (TK-303), 0.01 - 0.3M sodium hydroxide (NaOH) is made by mixing DI water with 50 wt % sodium hydroxide (NaOH). The 0.01 - 0.3M sodium hydroxide (NaOH) is used in the caustic wash stages of the Caustic-Side Solvent Extraction (CSSX) process.

Filter Cleaning Caustic Tank (TK-107)

In the Filter Cleaning Caustic Tank (TK-107), 0.02M sodium hydroxide (NaOH) is made up by mixing deionized (DI) water and 50 wt% NaOH. The 0.02M NaOH is used for chemical cleaning of the Cross Flow Filters (CFF's).

Caustic Dilution Feed Tank (TK-108)

In the Caustic Dilution Feed Tank (TK-108), 1.66M caustic is made by mixing process water and 50 wt% sodium hydroxide (NaOH). 1.66M caustic is used for adjusting solution molarities in the Alpha Sorption Tank-A (AST-A) (TK-101), and flushing monosodium titanate (MST) feed lines to Alpha Sorption Tank-A (AST-A) (TK-101)/Alpha Sorption Tank-B (AST-B) (TK-221).

Neutralization Tank (TK-317)

50 wt% sodium hydroxide (NaOH) is provided to the Neutralization Tank to either neutralize tank contents or to make up a batch of 25 wt% sodium hydroxide (NaOH) for use in adjusting the Na+ molarity of the Alpha Sorption Drain Tank (ASDT) (TK-601), neutralizing the Strip Effluent Hold Tank (SEHT) (TK-205), or Sludge Solids Receipt Tank (SSRT) (TK-104) contents. The Drum Off/Decon Area also receives caustic from the Neutralization Tank for decontamination activities.

Main Flush Distribution Header via hose connection as needed, and

CSSX Flush Header via hose connection as needed.

Note that deionized water is used for caustic dilution. We do not want metal ions going to the Caustic Side Solvent Extraction Process.

Sodium Hydroxide (NaOH) Tank Locations

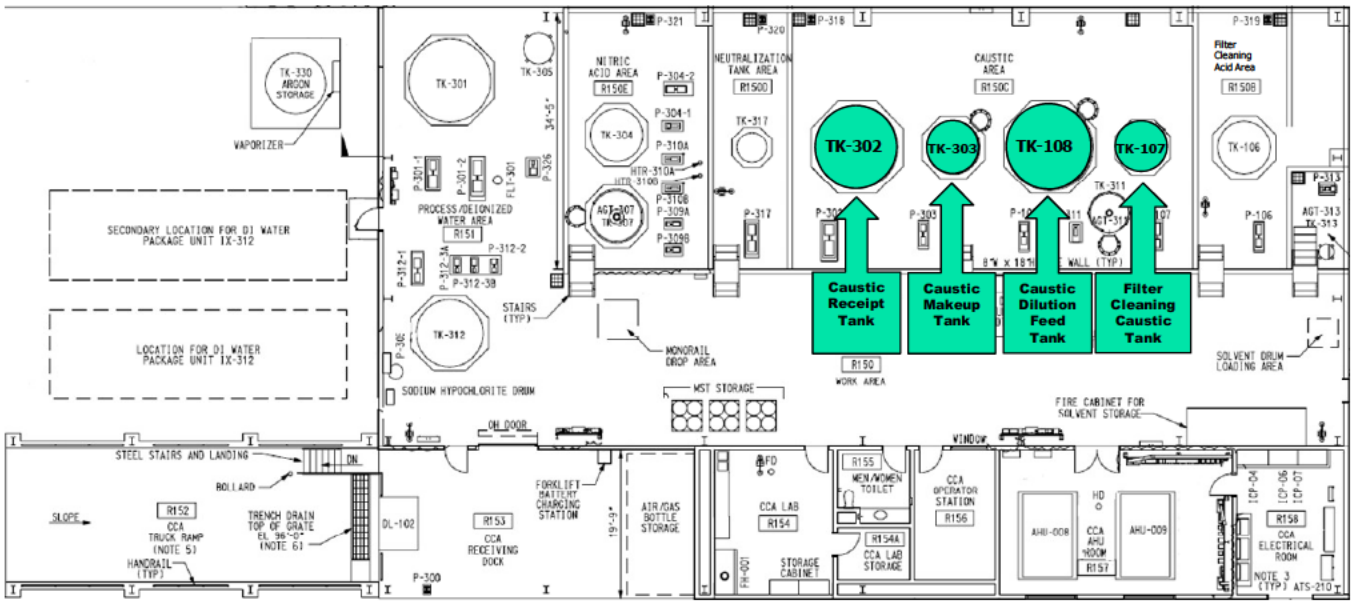

SWPGGS01.TP0101 175 of 274

Sodium Hydroxide (NaOH) (caustic) System Tank Location

The Caustic Receipt Tank (TK-302), Caustic Dilution Feed Tank (TK-108), Filter Cleaning Caustic Tank (TK-107), and Caustic Makeup Tank (TK-303), are all located in the diked caustic area (R150 C) of the Cold Chemicals Facility.

Monosodium Titanate (MST) System

- Purpose is to receive, prepare and store a two week supply of monosodium titanate (MST) for transfer to the AST-A and/or AST-B

SWPGGS01.TP0101 176 of 274

Monosodium Titanate (MST) System Purpose

The purpose of the Monosodium Titanate System is to receive, prepare, and store approximately a two-week supply of MST, (based on a usage of 72 gallons per batch) processed in AST-A when the SWPF is operating in single-strike mode.

Monosodium Titanate (MST) System Flow-path

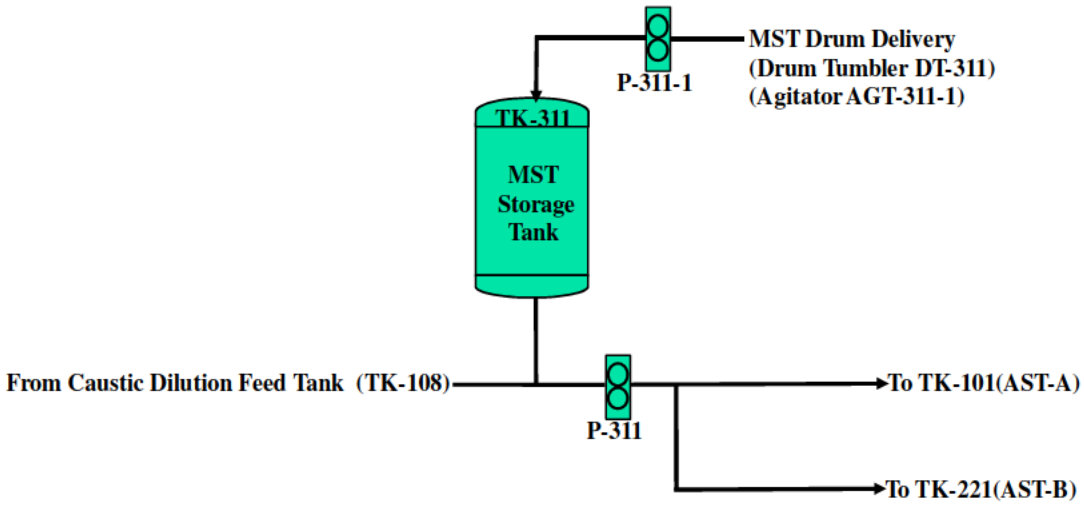

SWPGGS01.TP0101 177 of 274

Monosodium Titanate (MST) System Flow Paths

Monosodium Titanate (MST) is delivered to the SWPF in 55-gallon drums. A drum tumbler (DT-311) located in the warehouse and mechanical agitator (AGT-311-1) are provided to mix and agitate the MST in the drums prior to transfer to the MST Storage Tank (TK-311). The MST is transferred to the MST Storage Tank, using MST Drum Pump (P-311-1). The MST Storage tank has a 1000gal capacity.

Monosodium Titanate (MST) System Tank Location

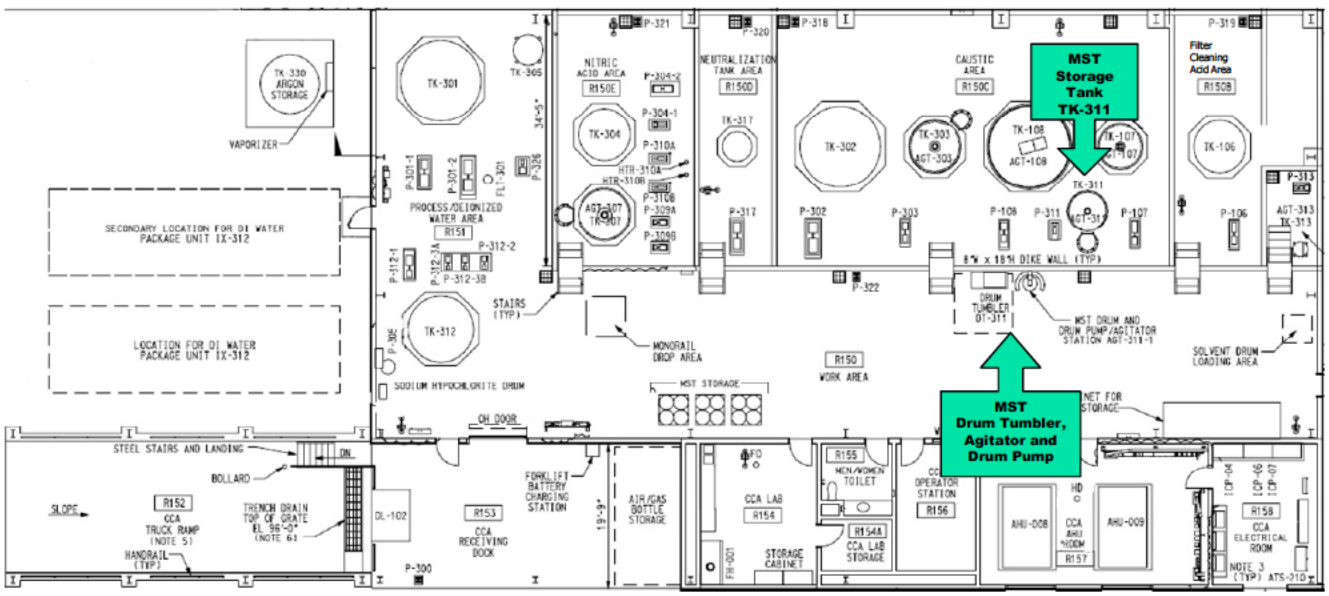

Monosodium Titanate (MST) System equipment and Tank Location

The 55-gallon MST drums, Drum Tumbler (DT-311), Agitator (AGT-311-1), and Drum Pump (P-311-1) are located in the Cold Chemicals Work Area R150. The MST Storage Tank (TK-311) and MST Transfer Pump (P-311) are located in the diked caustic area (R150 C) of the Cold Chemicals Facility.

Nitric Acid (HNO_3) System

- Purpose is to receive and prepare nitric acid for transfer to:
  - The CSSX strip and scrub contactors
  - Miscellaneous line/equipment flushes, and
  - Neutralization Tank and Solvent Drain Tank (SDT) for pH adjustment
  - Filter Cleaning Acid Feed Tank (TK-106) for Cross Flow Filter Cleaning

SWPGGS01.TP0101 179 of 274

Nitric Acid (HNO_3) System Purpose

The purpose of the nitric acid system is to receive, prepare, and store nitric acid for use in the CSSX Scrub, and Strip contactors. Nitric acid is also used for pH adjustment of the Neutralization Tank, the Solvent Drain Tank, Cross Flow Filter cleaning, and miscellaneous line and equipment flushes.

Nitric Acid (HNO_3) System Flow-path

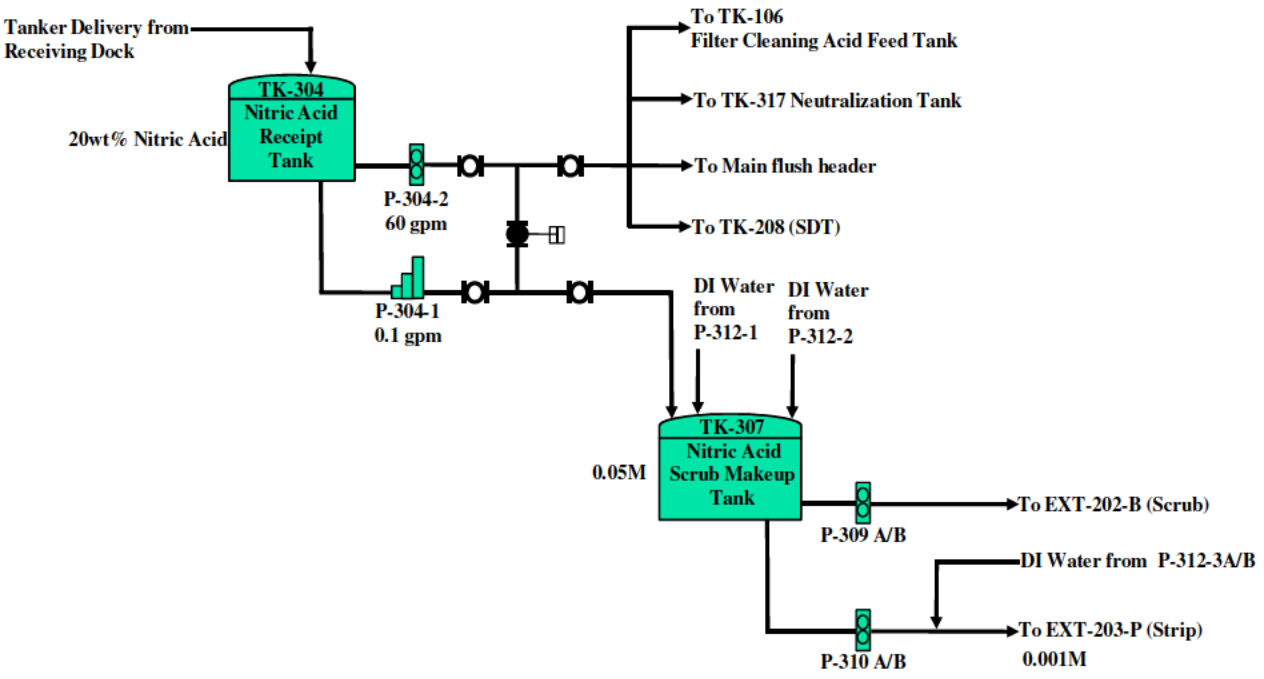

Nitric Acid (HNO_3) System Flow Paths

The 20 wt % nitric acid is delivered by tanker truck to the Nitric Acid Receipt Tank (TK-304). The Nitric Acid is distributed to the following tanks for use in the SWPF process.

Nitric Acid Scrub Makeup Tank (TK-307)

Initially, a set volume of DI water is added to the Nitric Acid Scrub Makeup Tank, using DI Water Transfer Pump (P-312-1). Once the DI water transfer is complete, a corresponding amount of 20 wt% nitric acid (HNO_3), set by volumetric ratio, is transferred from the Nitric Acid Receipt Tank (TK-304) using pump P-304-2. Pump P-304-2 is used for this first step due to its flow rate of 60gpm.

Note: During this batch addition, slightly less than the required amount of nitric acid is added to the tank.

Once the preset amount of nitric acid has been transferred pump P-304-2 is stopped. The remainder of the nitric acid is transferred, using P-304-1. Pump P-304-1 is used for making fine adjustment because its maximum pump capacity is less than 0.1gpm. This allows the normal makeup process to make small additions of nitric acid to the tank, minimizing concentration overshoot.

Pump P-304-2 to:

- **Neutralization Tank (TK-317)**
  In the Neutralization Tank, 20 wt% HNO3 is provided to adjust the pH of the tank contents.

- **Solvent Drain Tank (TK-208)**
  In the Solvent Drain Tank, 20 wt% HNO3 is provided to adjust the pH of the tank contents.

- **Filter Cleaning Acid Feed Tank (TK-106)**
  20 wt% HNO3 is provided to the Filter Cleaning Acid Feed Tank for use in Cross Flow filter cleaning.

Main flush distribution header via hose connection as needed, and

CSSX flush header via hose connection as needed

Nitric Acid (HNO_3) System Tank Location

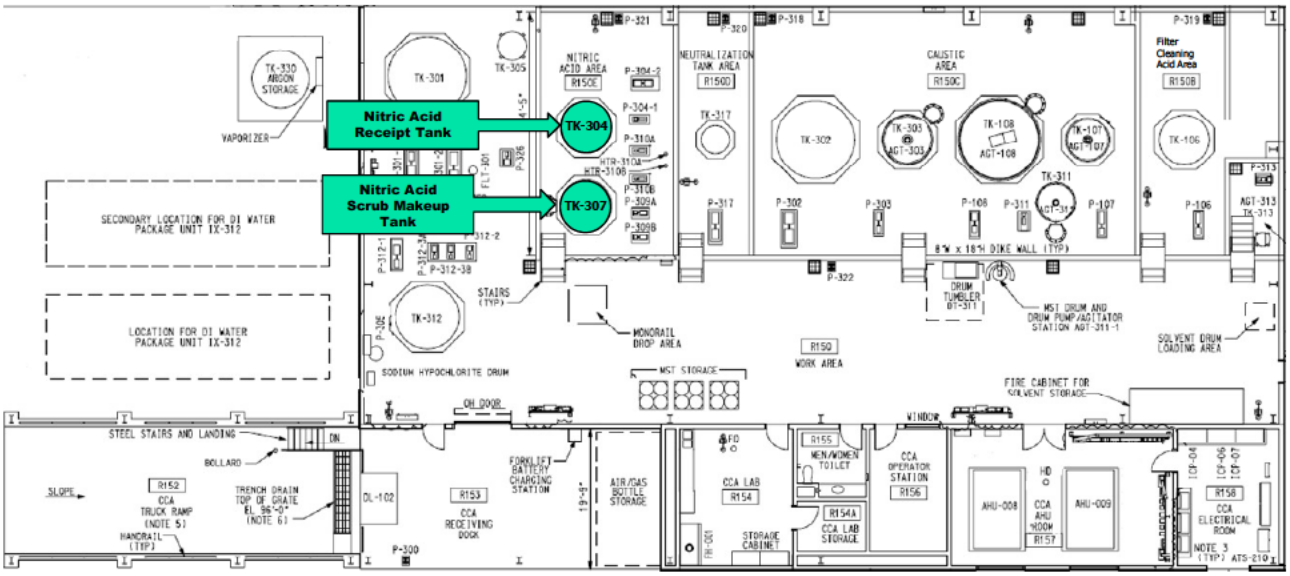

Nitric Acid (HNO_3) System Tank Location

The Nitric Receipt Tank (TK-304), the Nitric Acid Scrub Makeup Tank (TK-307) and their associated pumps are in the diked Nitric Acid Diked Area (R150 E).

Filter Cleaning Acid System

Purpose is to receive and prepare nitric acid for:

- Chemical cleaning of Alpha Sorption Process and Alpha Finishing Process Cross Flow Filters, and
- Decontamination activities

SWPGGS01.TP0101 182 of 274

Filter Cleaning Acid System Purpose

The purpose of the Filter Cleaning acid system is to receive, prepare, and store 20% nitric acid (HNO_3) for use in chemical cleaning of the Alpha Sorption Process and Alpha Finishing Process Cross Flow Filters, and decontamination activities.

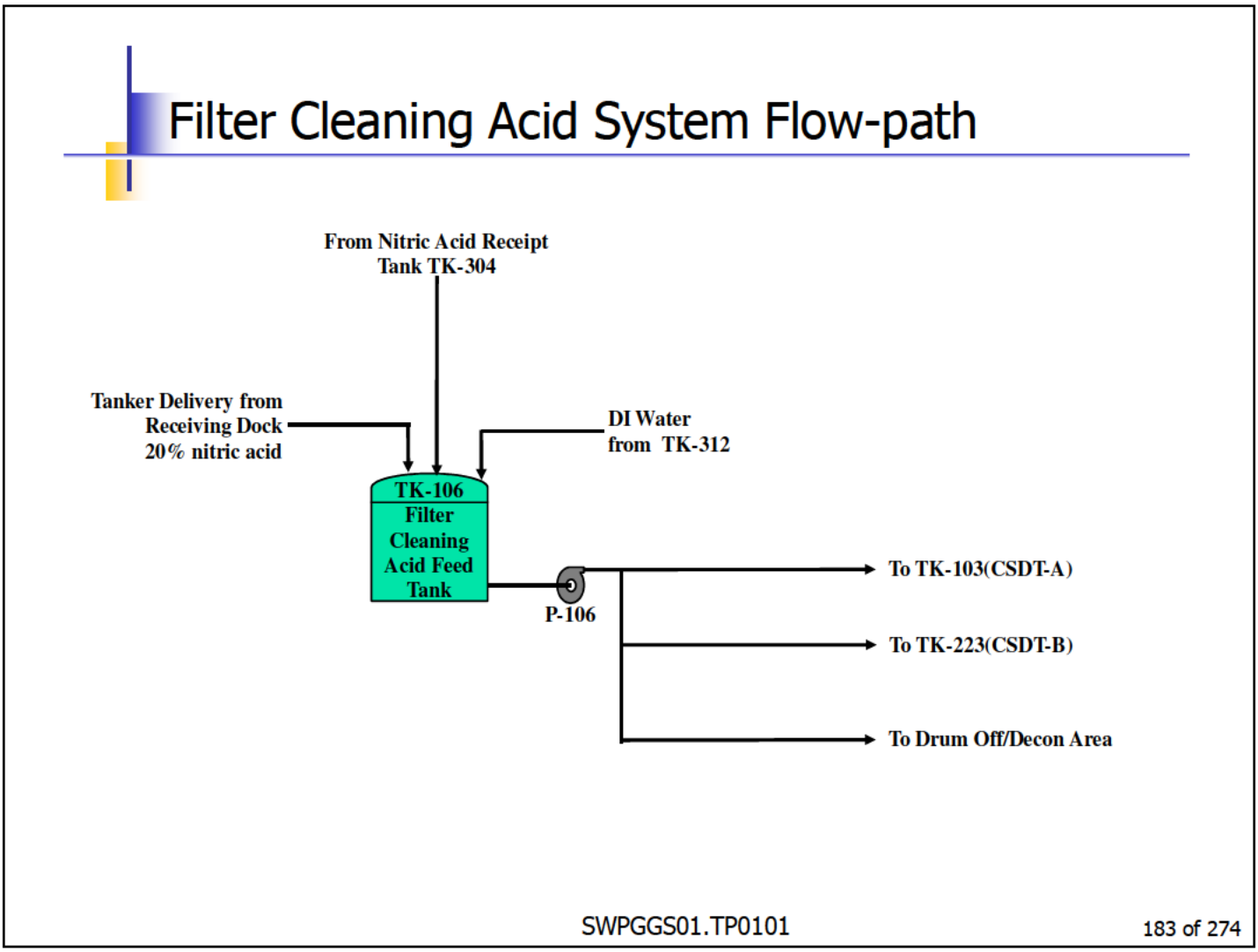

Filter Cleaning Acid System Flow Paths

Tanker trucks deliver 20% nitric acid (HNO3) via the Cold Chemicals Area (CCA) Receiving Dock to the Filter Cleaning Acid Feed Tank (TK-106). Acid is then transferred to CSDT-A and CSDT-B to be used as part of the chemical cleaning process for the Cross Flow Filters (CFFs). A route is also provided to the Drum Off/Decon Area for decontamination activities.

Filter Cleaning Acid System Tank Location

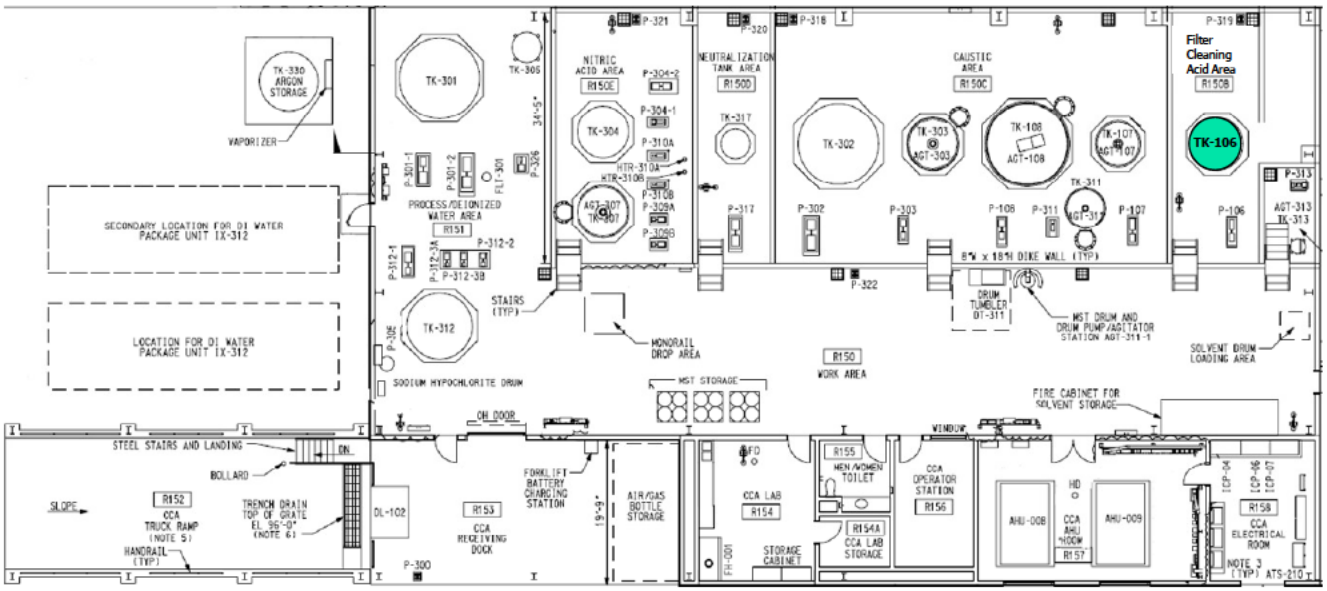

SWPGGS01.TP0101 184 of 274

Filter Cleaning Acid System Tank Location

The Filter Cleaning Acid Feed Tank (TK-106) is located in the diked Filter Cleaning acid area (R150 B).

Solvent System

Purpose is to receive and prepare solvent for use in the Caustic side Solvent Extraction Process (CSSX) for cesium removal

SWPGGS01.TP0101 185 of 274

Solvent System Purpose

The purpose of the solvent system is to receive, prepare, and store solvent for use in the CSSX process.

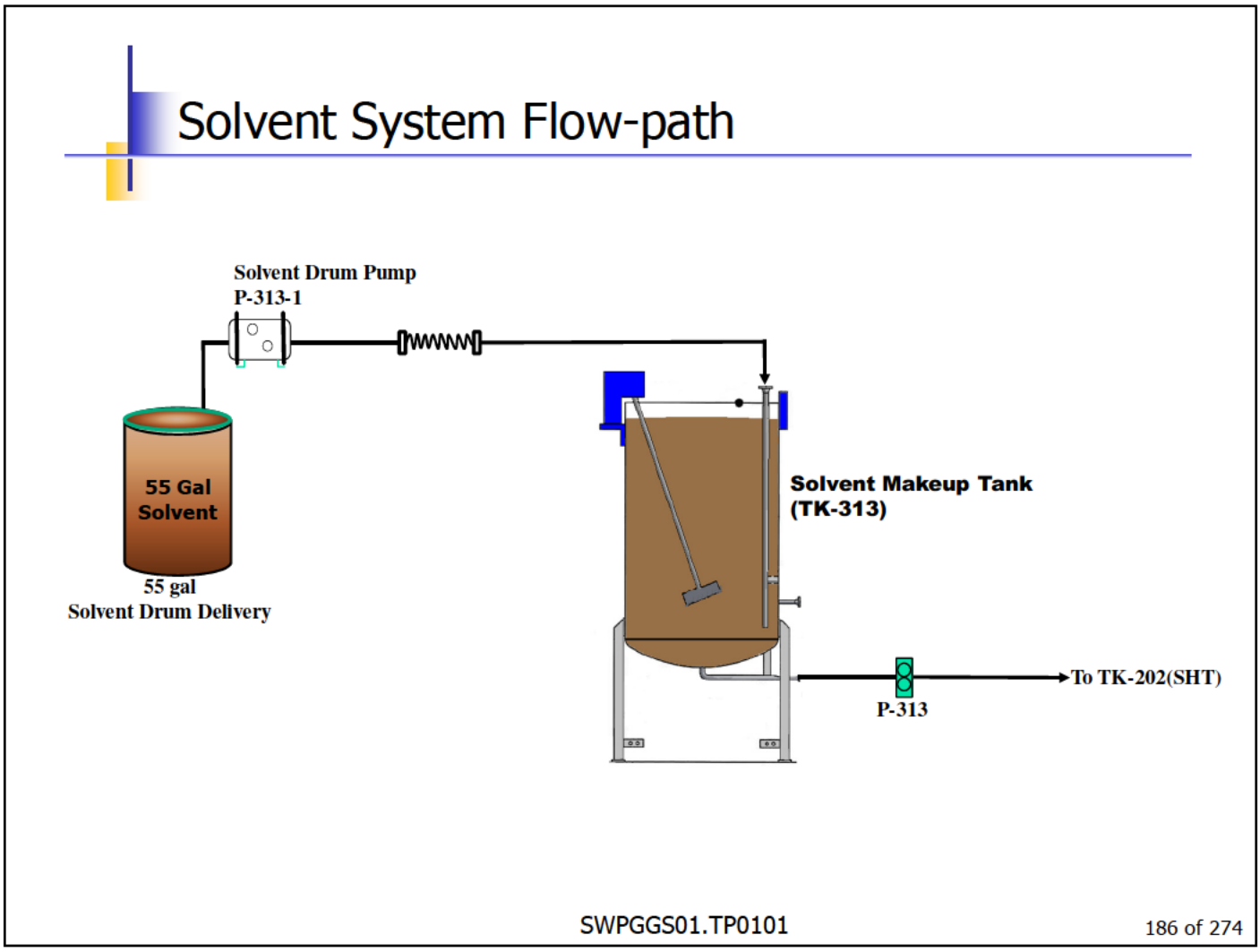

Solvent System Flow Paths

Solvent is delivered as a pre-mixed solution in a 55-gallon drum. The drum is discharged to the Solvent Makeup Tank (TK-313), and then transferred to the Solvent Hold Tank (SHT) (TK-202). The solvent makeup subsystem is only used occasionally, and is operated manually by the SWPF Operator. The Solvent Makeup Tank provides enough storage for the contents of one supply drum of solvent.

Solvent constituents are available in the event that a batch of solvent needs to be made up at the facility.

Solvent System Tank Location

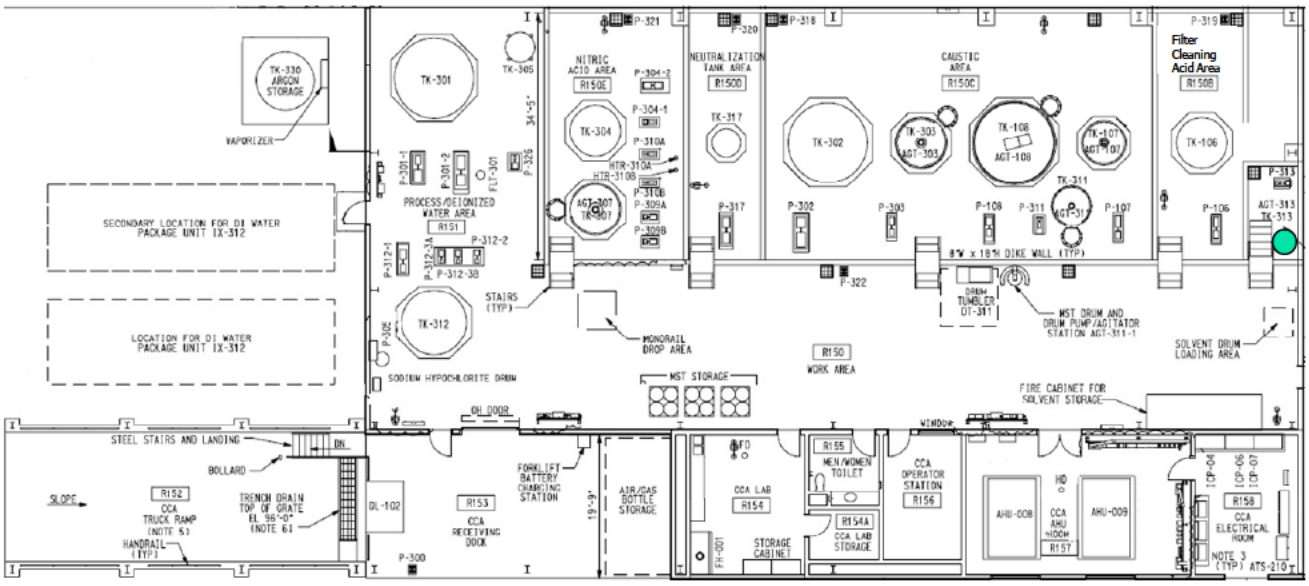

SWPGGS01.TP0101 187 of 274

Solvent System Tank Location

The Solvent Makeup Tank (TK-313) and Solvent Makeup Transfer Pump (P-313) are located in the diked Solvent Area (R 150 A) to contain any leakage from the tank or associated piping. The Solvent Makeup Tank (TK-313) and Solvent Makeup Transfer Pump (P-313) are the only equipment in the Solvent Area.

Sodium Hypochlorite (NaOCl) System

Purpose is to receive sodium hypochlorite (bleach) for use in the process water system to prevent microbial growth such as slime bacteria, molds, and algae.

These organisms can cause corrosion and clogging of equipment and process water distribution system.

SWPGGS01.TP0101 188 of 274

Sodium Hypochlorite (NaOCl) System Purpose

To receive and sodium hypochlorite (bleach) for use in the process water system to prevent microbial growth such as slime bacteria, molds, and algae.

These organisms can cause corrosion and clogging of equipment and process water distribution system.

Sodium Hypochlorite (NaOCl) System Flow-path

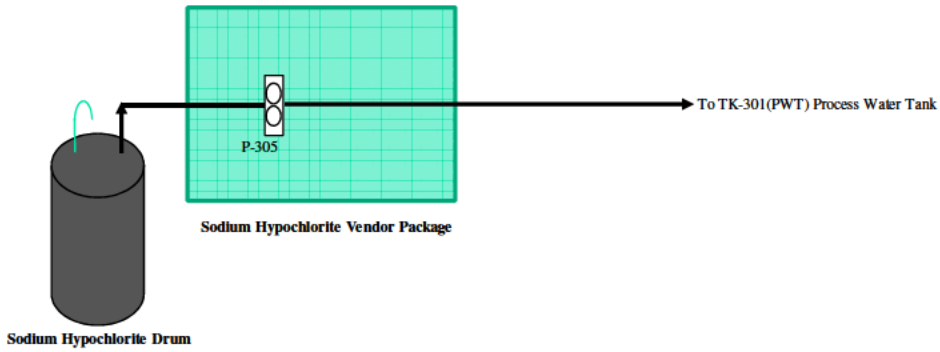

SWPGGS01.TP0101 189 of 274

Sodium Hypochlorite (NaOCl) System Flow Paths

The sodium hypochlorite (NaOCl) (bleach) solution is delivered in 55-gallon drums and connected to a skid-mounted addition package for delivery into the Process Water Tank (TK-301). A metering pump (P-305) transfers sodium hypochlorite (NaOCl) to the Process Water Tank (TK-301) on a periodic basis for microbial growth prevention in the tank and process water piping.

Sodium Hypochlorite (NaOCl) System Tank Location

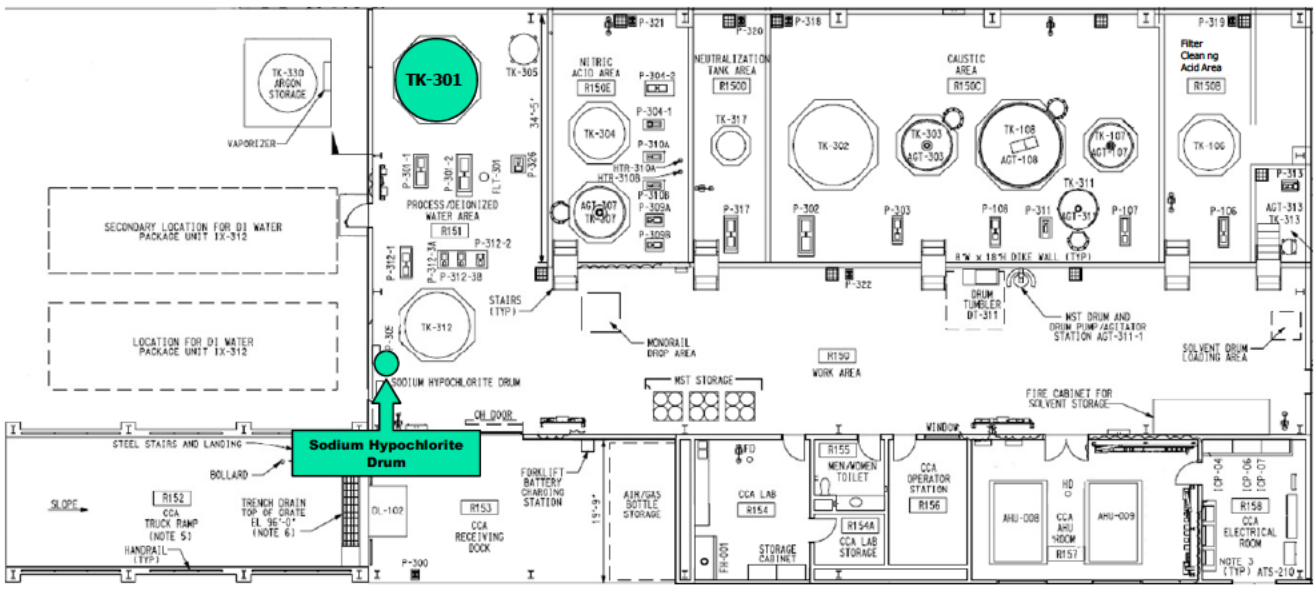

SWPGGS01.TP0101 190 of 274

Sodium Hypochlorite (NaOCl) System Tank Location

The Sodium Hypochlorite Addition System is located in the Process/DI Water Area. This part of the CCA is not surrounded by a dike. The system is located near the west wall of the CCA close to the DI Water Tank (TK-312).

Additional Systems in the Cold Chemical Area

- Neutralization Tank:
  - Na^+ adjustment of the Alpha Sorption Drain Tank,
  - Neutralization of Strip Effluent and Sludge Solids Receipt Tanks
  - Decontamination in the Drum Off/Decon Area,
  - pH adjustment of the Solvent Drain Tank, and
  - Receives spills from the Cold Chemical Area (CCA) Sumps
- DI Water Storage Tank
- Process Water Tank

Additional Systems in the Cold Chemical Area

Neutralization Tank (TK-317)

Used for Na^+ adjustment of the Alpha Sorption Drain Tank, neutralization of Strip Effluent and Sludge Solids Receipt Tanks, decontamination in the Drum Off/Decon Area, pH adjustment of the Solvent Drain Tank, and receives spills from the Cold Chemical Area (CCA) Sumps.

DI Water Storage Tank (TK-312)

A skid-mounted DI water system will be provided to fill the 6000 gallon DI Water Storage Tank (TK-312). The DI Water Storage Tank (TK-312) provides sufficient volume for more than a day of CSSX operations, not including the additional volume of scrub solution that would normally be maintained in the Nitric Acid Scrub Make-up Tank.

The DI water header is supplied by the DI Water Transfer Pump (P-312-1), which has a design capacity of 100 gpm. The pump will operate to supply a pressurized recirculation loop back to the DI Water Storage Tank. A flow meter with totalizing capability is installed on the supply header to allow automatic make-up of chemical supply tanks. An alarm and monitoring panel is installed inside the CCA, with general trouble alarms routed to the facility DCS.

Process Water Tank (TK-301)

The Process Water Tank (TK-301) has an 8,000-gallon working volume. The Process Water Utility Pump (P-301-1) and Process Water Flush Pump (P-301-2) are used to supply the Process Water System. Pumps P-301-1 and P-301-2 have design capacities of 75 and 300 gpm, respectively. The Process Water System supplies a number of users including the SSRT (for sludge washing), the flush header, pump seal make-up, Caustic Dilution Feed Tank, wet sump make-up, heat recovery water system, make-up to chiller systems, and building utility drops. The Process Water System is maintained at approximately 80 to 90 psig by the Process Water Pressure Tank (TK-305).

Neutralization Tank and Transfer Pump Location

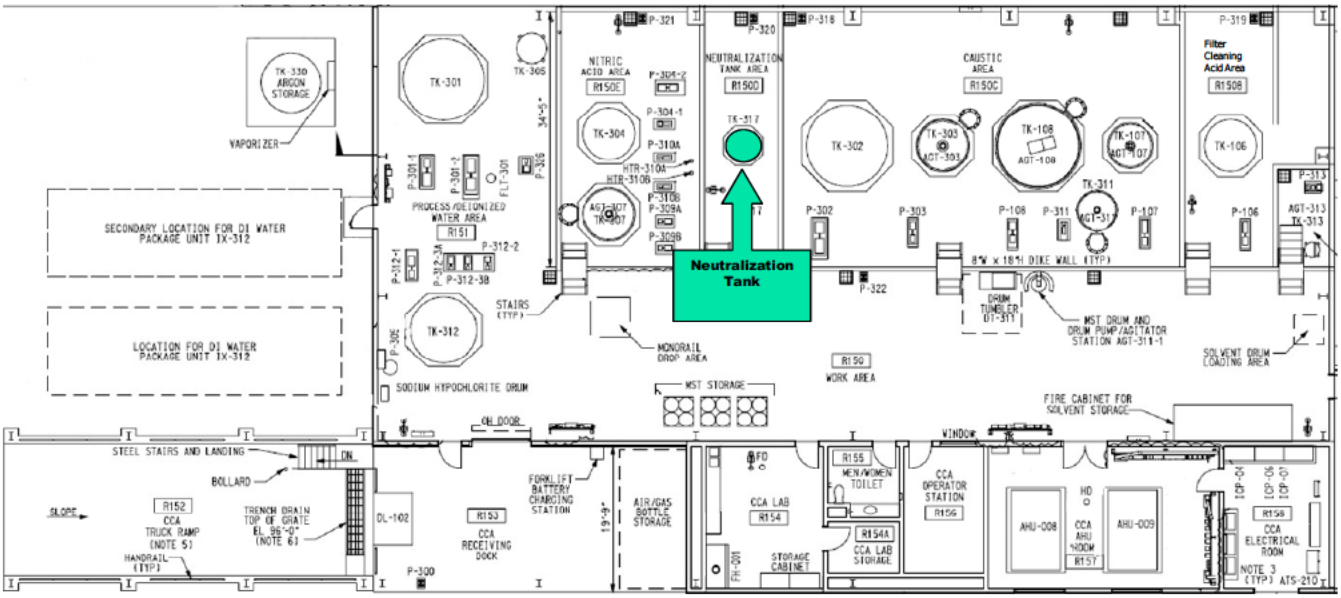

Neutralization Tank (TK-317) Location

The Neutralization Tank (TK-317) is located in the diked Neutralization Tank Area (Room 150D) to contain any leakage from the tank or associated piping. The Neutralization Tank and Neutralization Transfer Pump P-317 are the only equipment in the Neutralization Tank Area. The Neutralization Tank Area is located in the north-center section of the CCA.

Additional Systems Tank Locations

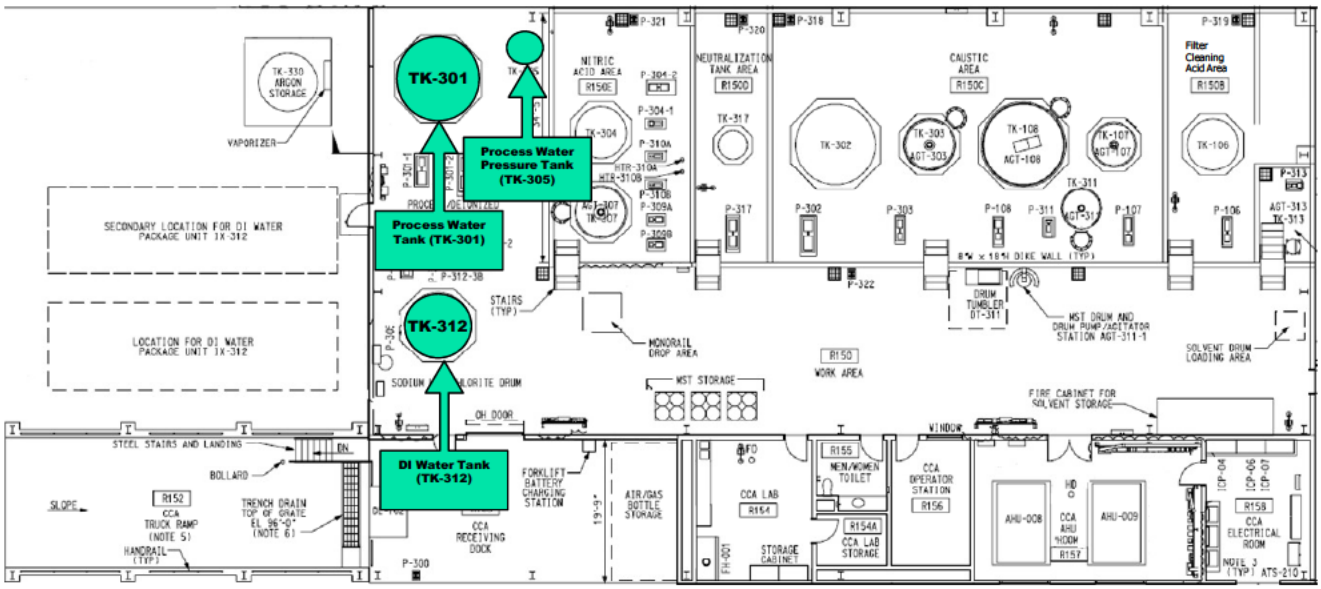

SWPGGS01.TP0101 193 of 274

DI Water Storage Tank (TK-312) and Process Water Tank (TK-301) Location

The DI Water Storage Tank (TK-312) and the Process Water Tank (TK-301) are located in the Process/DI Water Area (R 151). This part of the CCA is not surrounded by a dike. The system is located near the west wall.

Conclusion

- Stated the purpose of the Cold Chemicals Facility
- Listed the six Cold Chemicals Systems
- Stated the purpose of each Cold Chemical System
- Described the six Cold Chemicals System flow paths
- Stated where components of the Cold Chemical Systems are located

SWPGGS01.TP0101 194 of 274

Conclusion

The purpose of the Cold Chemicals Facility:

To receive process chemicals from outside vendors, verify the chemicals received are correct and place the chemicals in the appropriate storage area or tank, dilute if necessary and transfer chemicals as needed for use in the main processes of the Salt Waste Processing Facility (SWPF)

Cold Chemicals Systems are:
- Sodium Hydroxide (NaOH)
- Nitric Acid (HNO_3)
- Monosodium Titanate (MST)
- Filter Cleaning Acid
- Solvent
- Sodium Hypochlorite (NaOCl)

The purpose, flow-paths, and location of each Cold Chemical System components

Salt Waste Processing Facility
MODULE 7

Balance of Plant Overview

Objectives

1. State the purpose of each BOP System
2. Describe how each BOP System operates
3. List the major components of each BOP System

BoP Systems

- Plant Air System
- Air Dilution System
- Heating, Ventilation, and Air Conditioning Systems
- Process Ventilation Systems
- Plant Water Systems
- Plant Electrical System
- Fire Protection System
- Distributed Control System

Plant Air System

The purpose of the Plant Air System is to deliver compressed air with enough volume, quality, and pressure to properly power required components by any user during normal operating conditions.

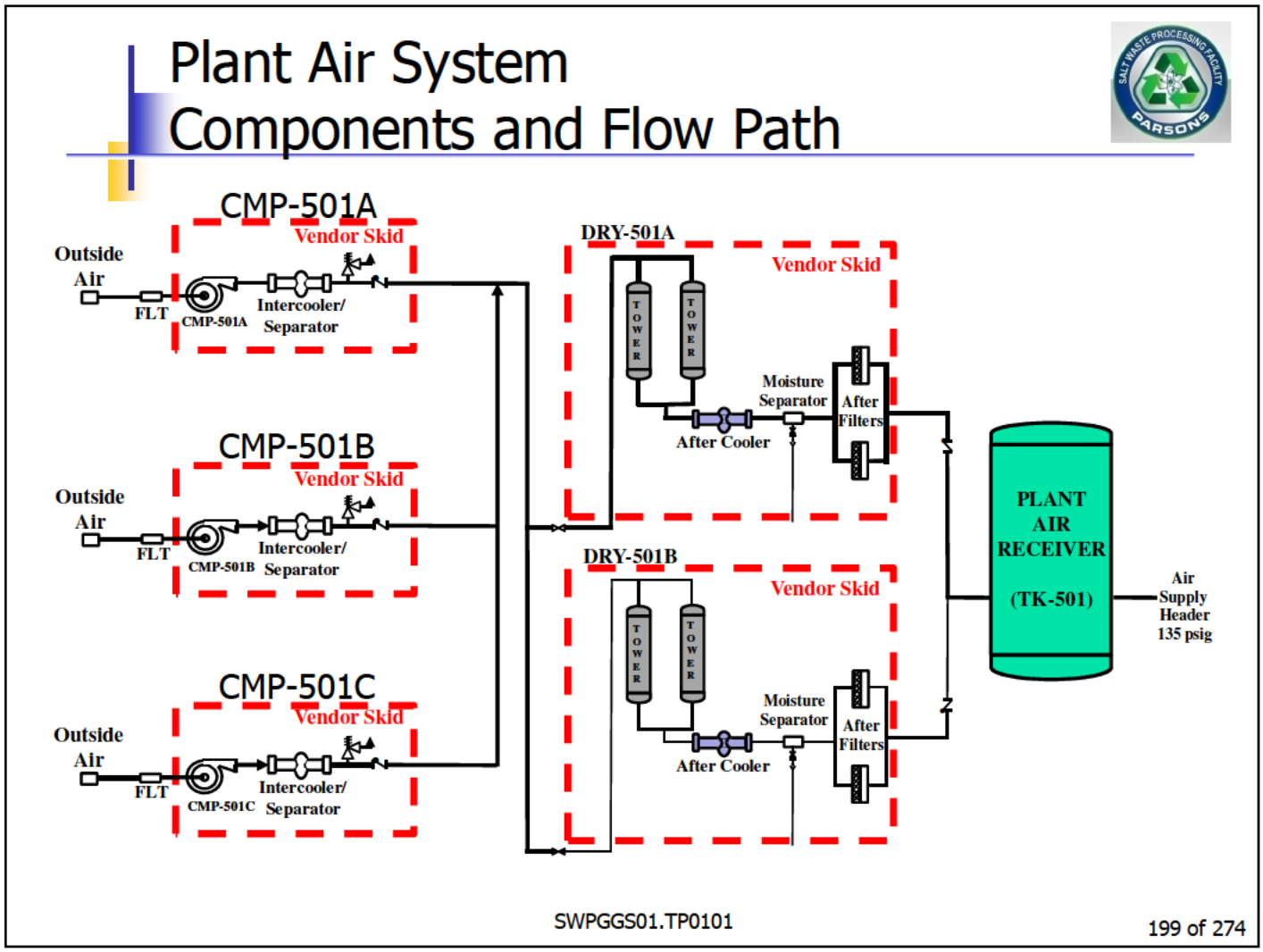

Plant Air System Components and Flow Path

The Plant Air System is supplied by three identical 50%-capacity compressors (CMP-501A/B/C) and will supply all Plant Air and Instrument Air loads.

A pre-filter, intercooler/moisture separator and local control panel is provided for each compressor as a vendor package.

Outside air is drawn into the Compressor Building through a wall opening. The pre-filter is replaceable and is in-line with the compressor air intake. Two compressors are in operation at any given time. The third compressor is a standby unit ready to operate at any given time. The two operational compressors operate in a lead/lag arrangement. During low demand, only the lead compressor operates to maintain receiver tank pressure. The lag compressor starts when the air consumption rate increases beyond the output of the lead compressor.

The compressed air from the compressors is routed through a manifold into a common header. This header is connected to two 100%-capacity (3,000 scfm each) vendor-packaged air dryer units (DRY-501A/B). The dryers reduce the dew point of the compressed air to -40º F or lower. One dryer unit is operational and the other is an on-line standby unit. Each air dryer package includes desiccant dryers, an after-cooler, moisture separator, drain traps, after-filter, and local control panel.

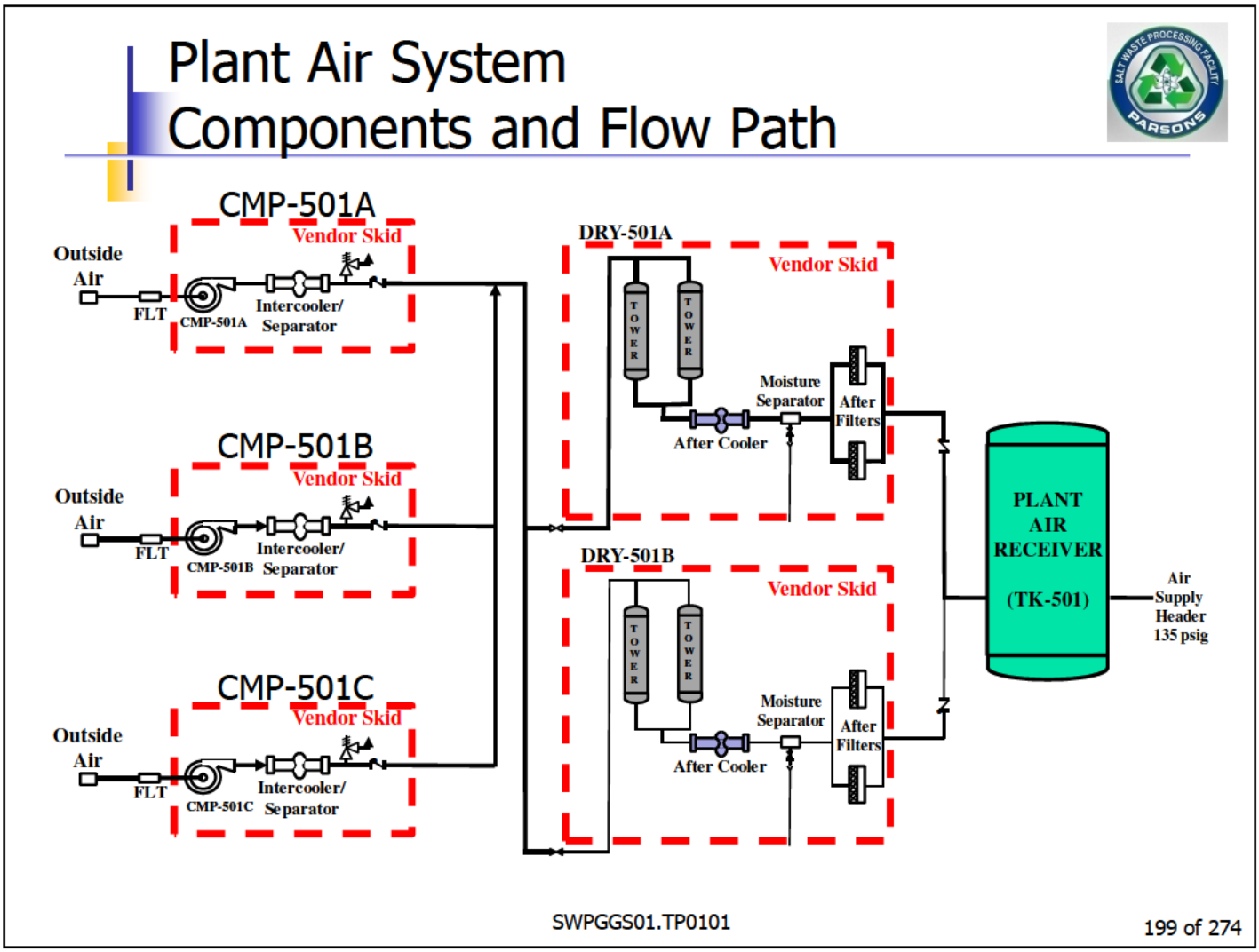

The compressed air then flows to the Plant Air receiver tank (TK-501) where the air is stored until needed. The receiver acts as a surge volume to maintain a constant, smooth flow of air to the plant and instrument air piping. The receiver also minimizes the loading and unloading of the air compressor. Lastly, the receiver serves to precipitate any moisture that may be present in the air as it comes from the compressor or that may be carried over from the aftercooler.

The air from the receiver tank then flows to a pressure control manifold where the air pressure is reduced from the compressor outlet pressure of 135 psig to the desired distribution header pressure.

Plant Compressed Air Loads

- Air Utility Stations
- 5 sets of Air Pulse Agitators - Largest consumers of plant compressed air
- 13 Air-operated Diaphragm (AOD) Pumps
- Instrumentation and Control (I&C) Valves
- Tank Air Purge - Critical for plant safety
- Analytical Laboratory
- Two (2) Drum Pumps
- Two (2) Back-pulse charge tanks
- Process Water Pressure Tank

SWPGGS01.TP0101 200 of 274

Plant Compressed Air Loads

- Air Utility Stations
  - Breathing Air System manifolds

The breathing air manifolds operate on the pressure demand principle to supply constant pressure to personal air-supplied respirators. Breathing Air connections are provided wherever there is a Plant Air Utility Station manifold. Portable point-of-attachment manifolds will be connected to Plant Air utility stations when breathing air is required. The point-of-attachment manifold will be equipped with breathing air filters and instrumentation to monitor the quality of the breathing air.

- Air Powered Tools
- 5 sets of Air Pulse Agitators - Largest consumers of plant compressed air
- 13 Air-operated Diaphragm (AOD) Pumps
- Instrumentation and Control (I&C) Valves
- Tank Air Purge - Air purge prevents process tanks from reaching their Composite Lower Flammability Limit (CLFL). Tank Air purge is critical for plant safety.
- Analytical Laboratory
- Two (2) Drum Pumps
- Two (2) Back-pulse charge tanks
- Process Water Pressure Tank

Air Dilution System

The purpose of the Air Dilution System is to be a backup air supply for the Tank Air Purge to prevent process tanks from reaching their Composite Lower Flammability Limit (CLFL).

Tank Air purge is critical for plant safety.

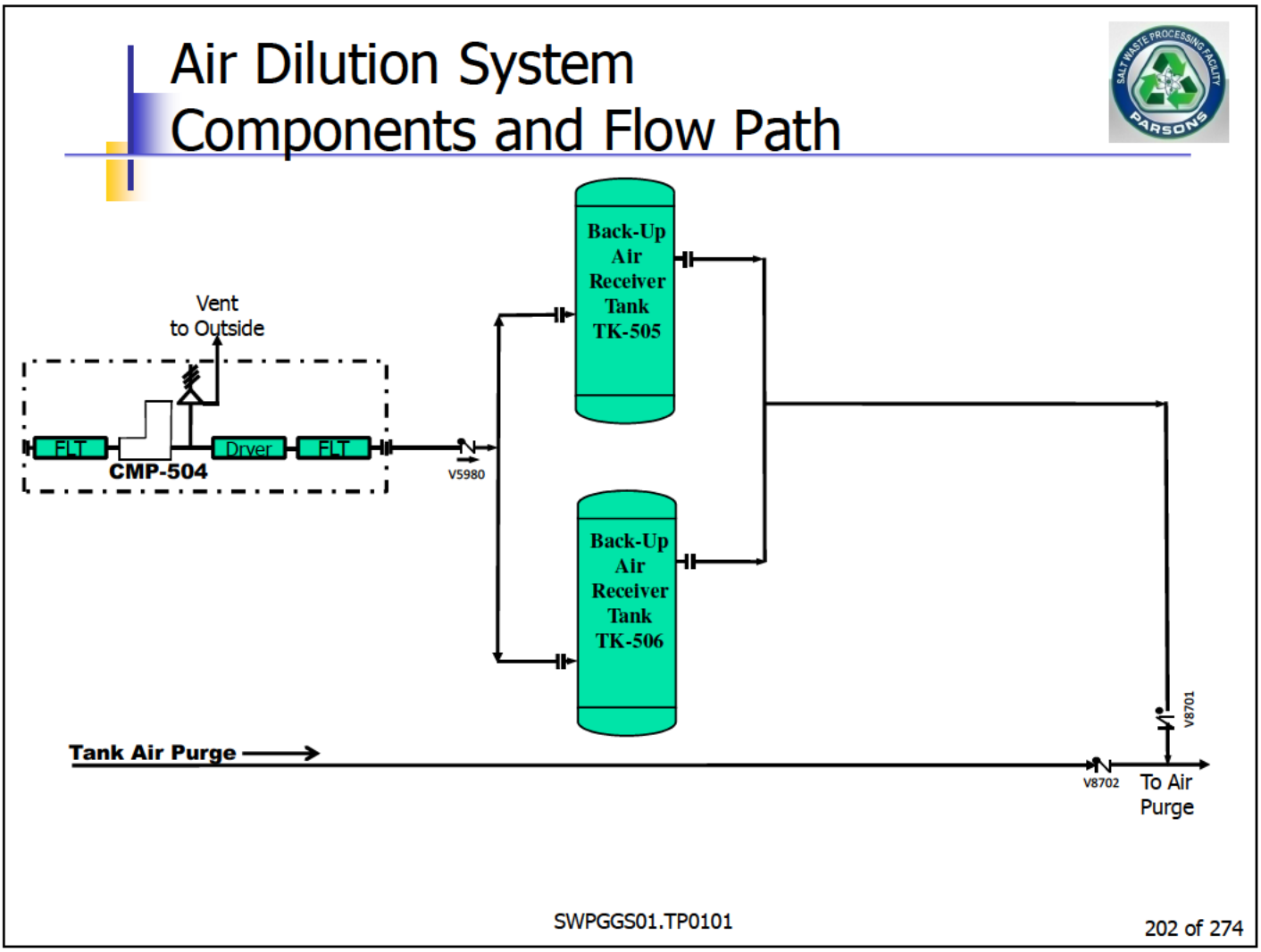

Air Dilution System Major Components and Flow Path

The Air Dilution System consists of a compressor unit (CMP-504), two receiver tanks (TK-505 & TK506), and a distribution network to supply dried, oil-free compressed air to the Tank Air Purge only.

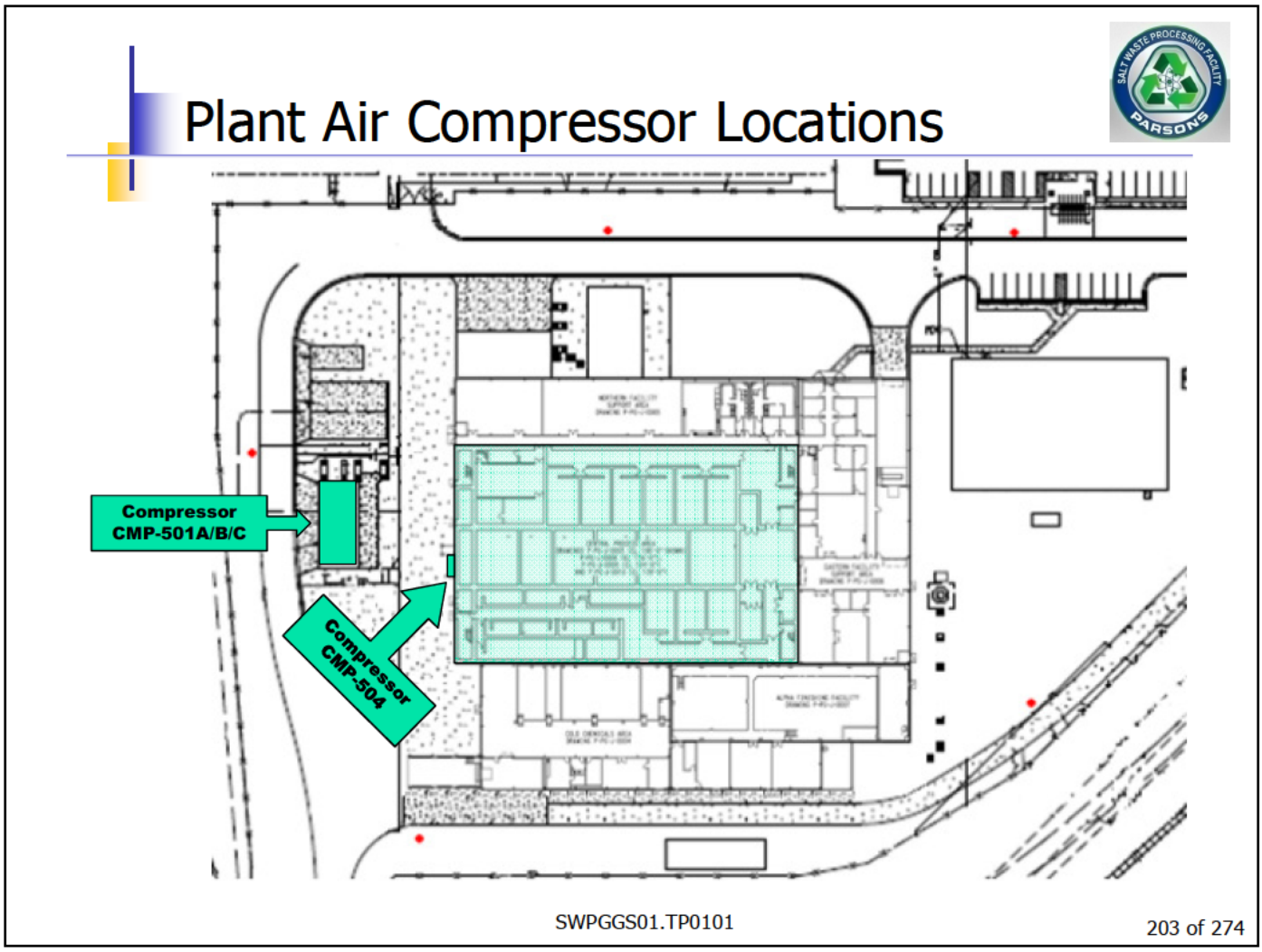

Air Compressor Location

Air Compressors CMP-501A/B are in the Compressor building located on the west side of the Central Processing Area.

Air Compressor CMP-504 is located on a pad against the outer wall on the west side of the CPA.

Heating, Ventilation, and Air Conditioning Systems Purpose

- HVAC systems control the temperature, pressure, and humidity.
- Ventilation systems limit the spread of radioactive material to protect workers, the public, and the environment.

Heating Ventilation and Air Conditioning Systems

The purpose of the following heating, ventilation and air conditioning (HVAC) systems are to provide environmental control of temperature, pressure, humidity, and where necessary, radioactive material confinement

- Process Building Ventilation System
- Analytical Laboratory HVAC Zone
- Control Room (CR) HVAC
- Alpha Finishing Facility (AFF) HVAC
- Compressor Building and Cold Chemicals Area (CCA)

SWPGGS01.TP0101 205 of 274

Heating Ventilation and Air Conditioning Systems

The HVAC systems for the SWPF include individual systems for specific areas and components. Each HVAC system provides environmental control and, where necessary, radioactive material confinement for a specific area or components.

Process Building Ventilation System (PBVS)

- Air Handling Units (AHU) provide control of the temperature, pressure, and humidity.
- Ventilation system limit the spread of radioactive material to protect workers, the public, and the environment.

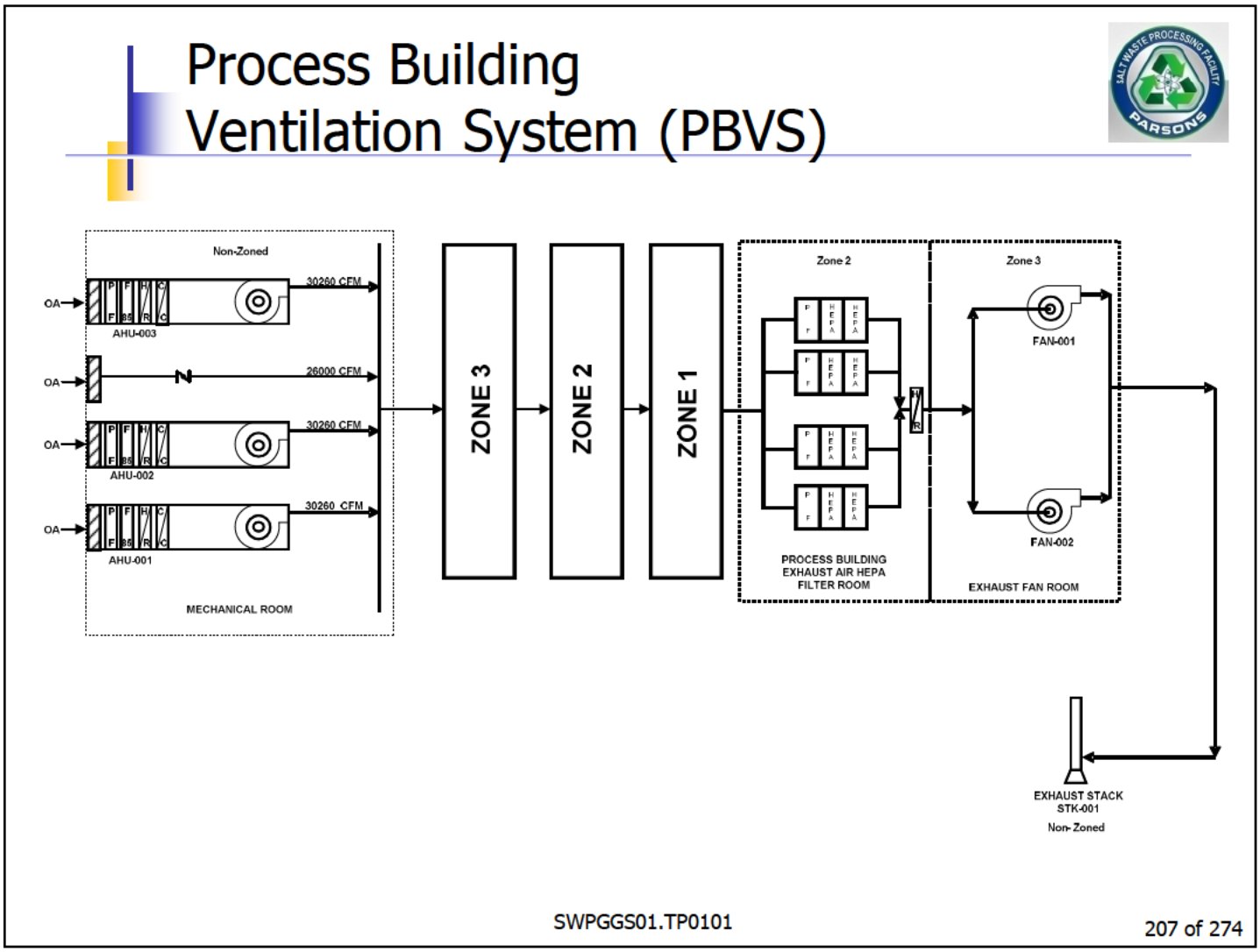

Process Building Ventilation System (PBVS)

The PBVS provides radiological confinement for the Process Building by cascading airflow through three zones:

- Zone 1 areas are those with the greatest potential for radiological contamination and subsequent airborne release.
- Zone 2 areas are those that are normally free of contamination, although there is some likelihood that the areas could become contaminated.
- Zone 3 areas are those areas that do not normally contain radiological materials.

The PBVS maintains a cascading airflow from Zone 3 to Zone 2 and then Zone 1 by maintaining differential pressures (dPs) between the three zones, with Zone 1 having the lowest pressure and Zone 3 the highest. (Note that all zones are maintained at negative pressure with respect to the atmosphere to prevent unfiltered releases.) The Zone 1 areas are maintained at a negative pressure of -3.0 inches water gauge (w.g.), the Zone 2 areas at -0.30 inches w.g., and the Zone 3 areas at -0.15 inches w.g.

Process Cascading Flow Example

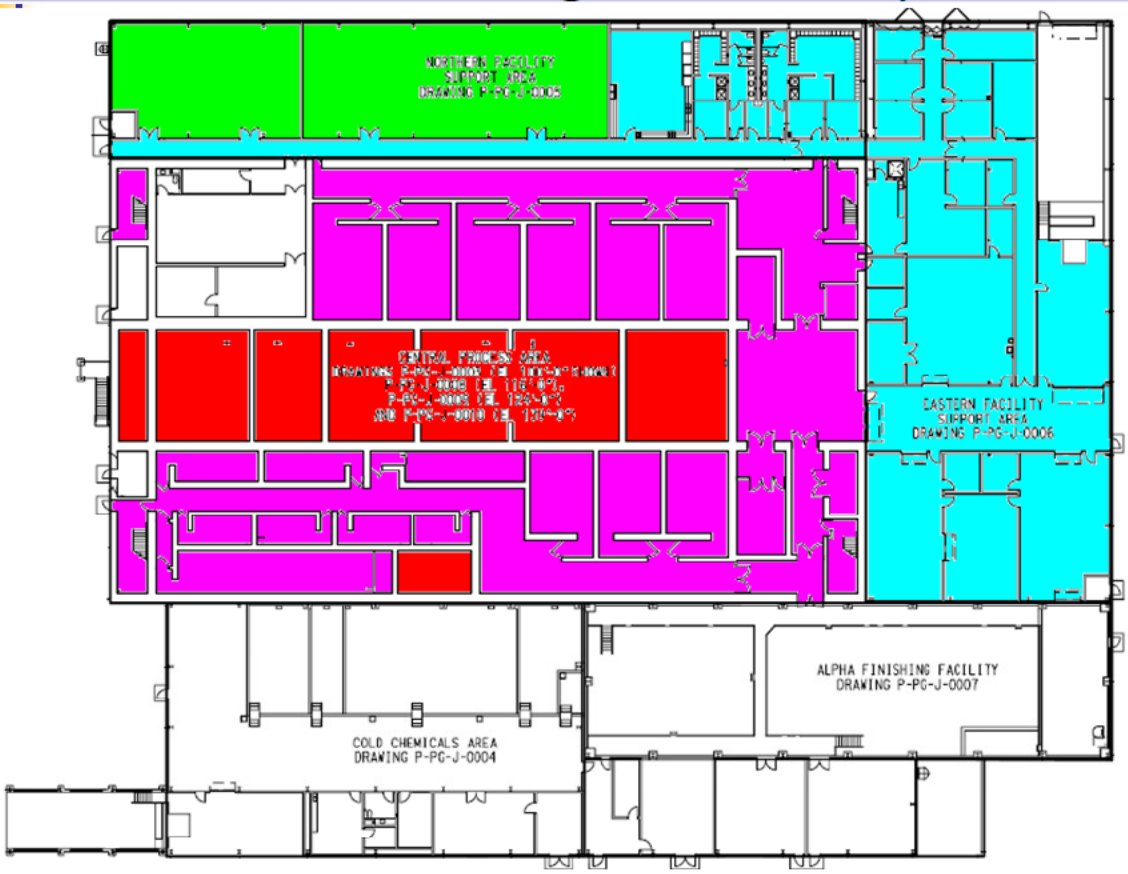

Green = Non zone or normal atmosphere. Air Handling Units are located in this area.
Blue = Zone 3 areas are those areas that do not normally contain radiological materials. Occupied areas
Fuchsia = Zone 2, normally free of contamination, some likelihood areas could become contaminated.
Red = Zone 1, the greatest potential for radiological contamination and subsequent airborne release.

Analytical Laboratory HVAC Zone

- Designed to minimize the potential for chemical or radiological contamination within occupied areas
- Receives conditioned and filtered air from the PBVS supply header

SWPGGS01.TP0101 209 of 274

Analytical Laboratory HVAC Zone

The Analytical Laboratory is provided with a separate HVAC zone.

Laboratory ventilation is designed to minimize potential for chemical or radiological contamination within the Laboratory occupied areas.

All Analytical Laboratory areas receive conditioned and filtered air from the PBVS supply header.

Analytical Laboratory HVAC Zone

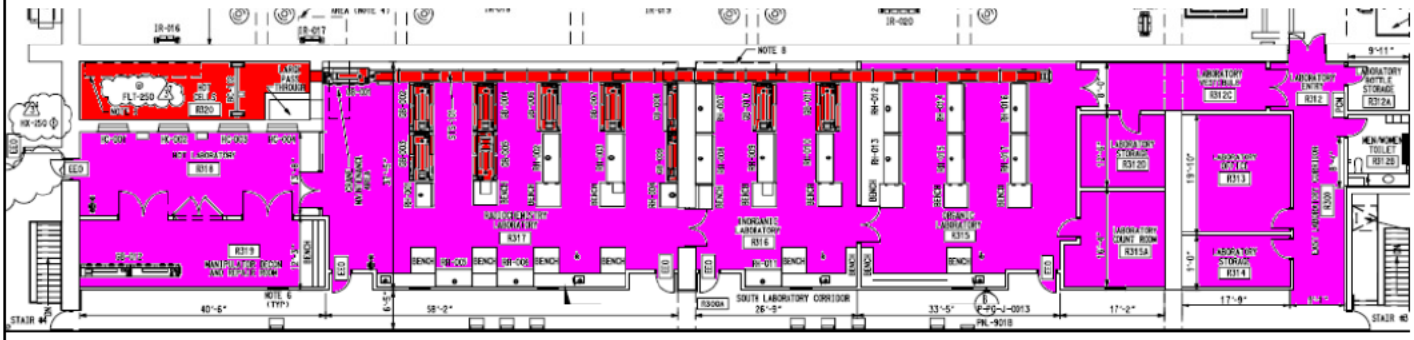

SWPGGS01.TP0101 210 of 274

Analytical Laboratory HVAC Zone

The Analytical Laboratory contains only two pressure zones.

- Zone 1 areas have the greatest radiological consequences, should an airborne release occur.
- Zone 2 areas are less likely to become contaminated, and may contain radiological materials.

The Analytical Laboratory HVAC System is designed to maintain a cascading airflow from Zone 2 into Zone 1 areas.

Control Room (CR) HVAC

- Separate ventilation system independent of the PBVS
- Capability to filter and condition either a combination of outside air and returned air or 100 percent (%) recirculated air
- Maintained at a positive pressure with respect to the atmosphere

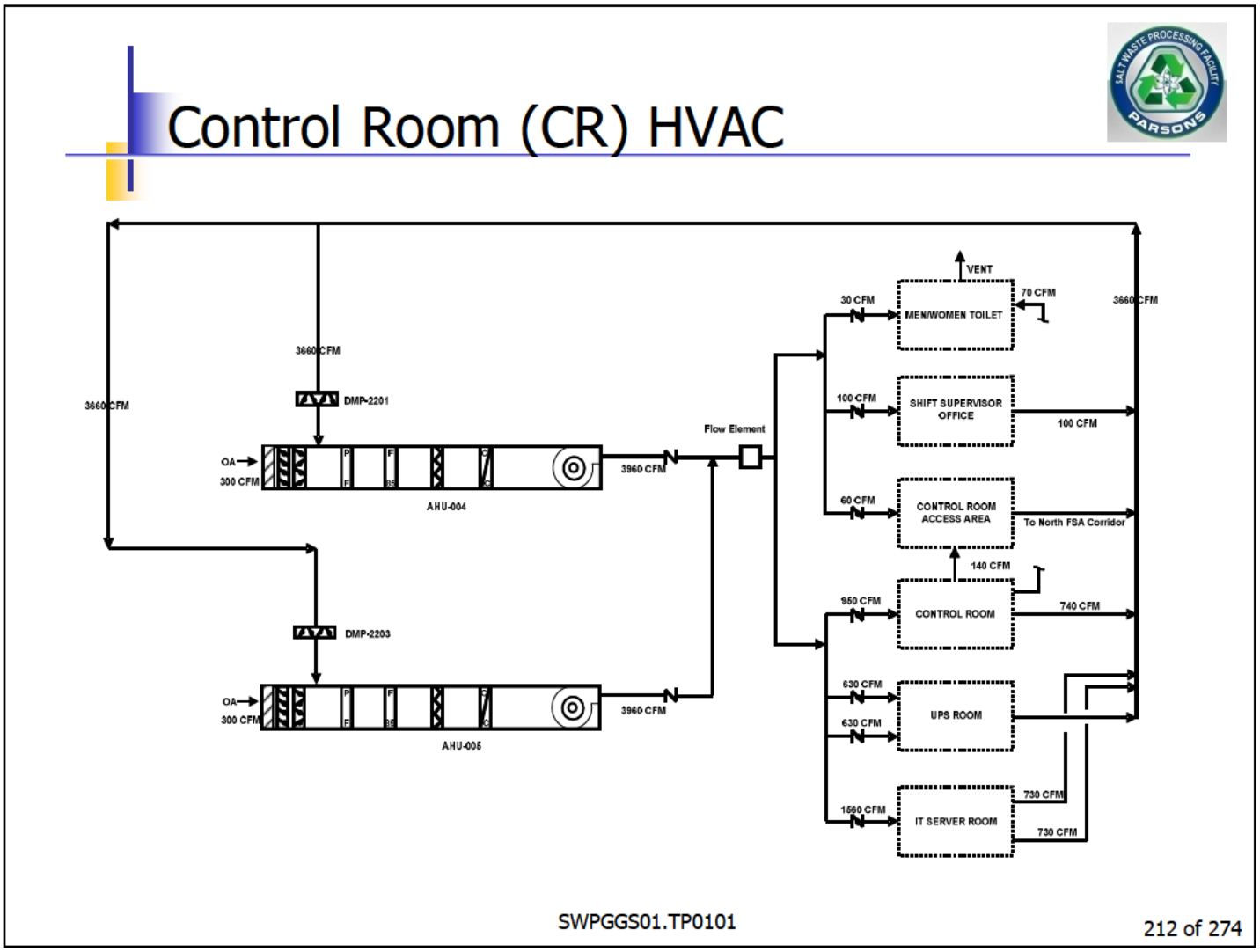

Control Room HVAC

The CR is provided with separate AHUs that operate independently of the PBVS supply and exhaust.

The purpose of the CR HVAC is to allow continued safe occupancy of the CR by operations personnel to remotely control and monitor the SWPF if the PBVS fails or the Process Building inlet air becomes contaminated from the airborne release of hazardous materials from the SWPF or an adjacent facility.

Alpha Finishing Facility (AFF) HVAC

- Provided with independent HVAC System
- Provides filtered and conditioned outside air for distribution throughout the area
- Maintains cascading airflow from normally occupied to potentially contaminated areas
- Exhaust air filtered by HEPA filters prior to discharge

SWPGGS01.TP0101 213 of 274

Alpha Finishing Facility HVAC

The Alpha Finishing Facility (AFF) HVAC System filters outside air to remove dust, provides heating or cooling of the supply air, as necessary, to control the temperature and humidity of the air in the AFF for worker comfort, to remove process and equipment heat loads, and prevent process upsets due to excessive temperature or freezing.

The AFF HVAC also includes the AFF process tank ventilation to provide confinement for the potential release of radioactive material in the AFF.

Compressor Building and Cold Chemicals Area

- Separate ventilation systems are provided for each
- Compressor Building system provides general building ventilation only, no temperature control
- CCA HVAC system provides general building ventilation and temperature control

SWPGGS01.TP0101 214 of 274

Compressor building and Cold Chemicals HVAC

Compressor Building HVAC System

Provides heating and ventilation only to the Compressor Building; cooling is not provided.

CCA HVAC System

Provides ventilation and temperature control of areas in the CCA to support human occupancy and equipment operation. Because no radioactive materials are present in the CCA, the CCA HVAC System does not perform a confinement function.

Process Ventilation Systems

The process ventilation systems are:

- Process Vessel Ventilation System (PVVS)
- Pulse Mixer Ventilation System (PMVS)

The primary purpose for process ventilation systems is to provide containment.

Process Vessel Ventilation System (PVVS)

Provides airflow through vapor space of process vessels and the contactor vent header to:

- Ensure airborne radioactive material not released to environment
- Limits accumulation of flammable gases
- Works in combination with Tank Air Purge

SWPGGS01.TP0101

216 of 274

Process Vessel Ventilation System (PVVS)

The PVVS maintains a negative pressure (-10 in w.c.) in the vapor spaces of selected process tanks to limit the potential spread of radioactive contamination through the tank overflow lines and orifices. PVVS also mitigates the buildup of flammable vapor (i.e., volatilized Isopar®L) in the headspace of the process vessels and contactors below 25% of composite lower flammability limit (CLFL). The vented air is cooled to condense vapors and then filtered to remove any particulates prior to being combined with the Process Building exhaust.

Process Vessel Ventilation System (PVVS)

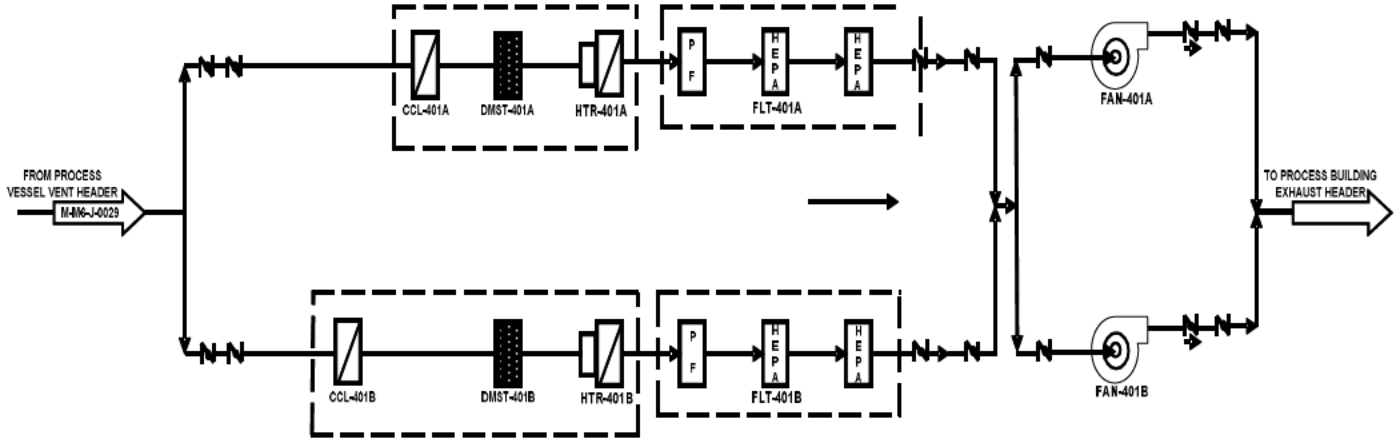

Pulse Mixer Ventilation System (PMVS)

- The PMVS is designed to provide an exhaust vent pathway for the Air Pulse Agitators (APAs)
- Provide confinement of the potentially contaminated APA exhaust air

SWPGGS01.TP0101 218 of 274

Pulse Mixer Ventilation System (PMVS)

The PMVS is designed to provide an exhaust vent pathway for the Air Pulse Agitators (APAs) to support APA operation and provide confinement of the potentially contaminated APA exhaust air. The PMVS maintains a negative pressure in the PMVS header (-36 in w.c.).

The APAs are located inside the process vessels with high solids concentrations to provide mixing of the process liquid.

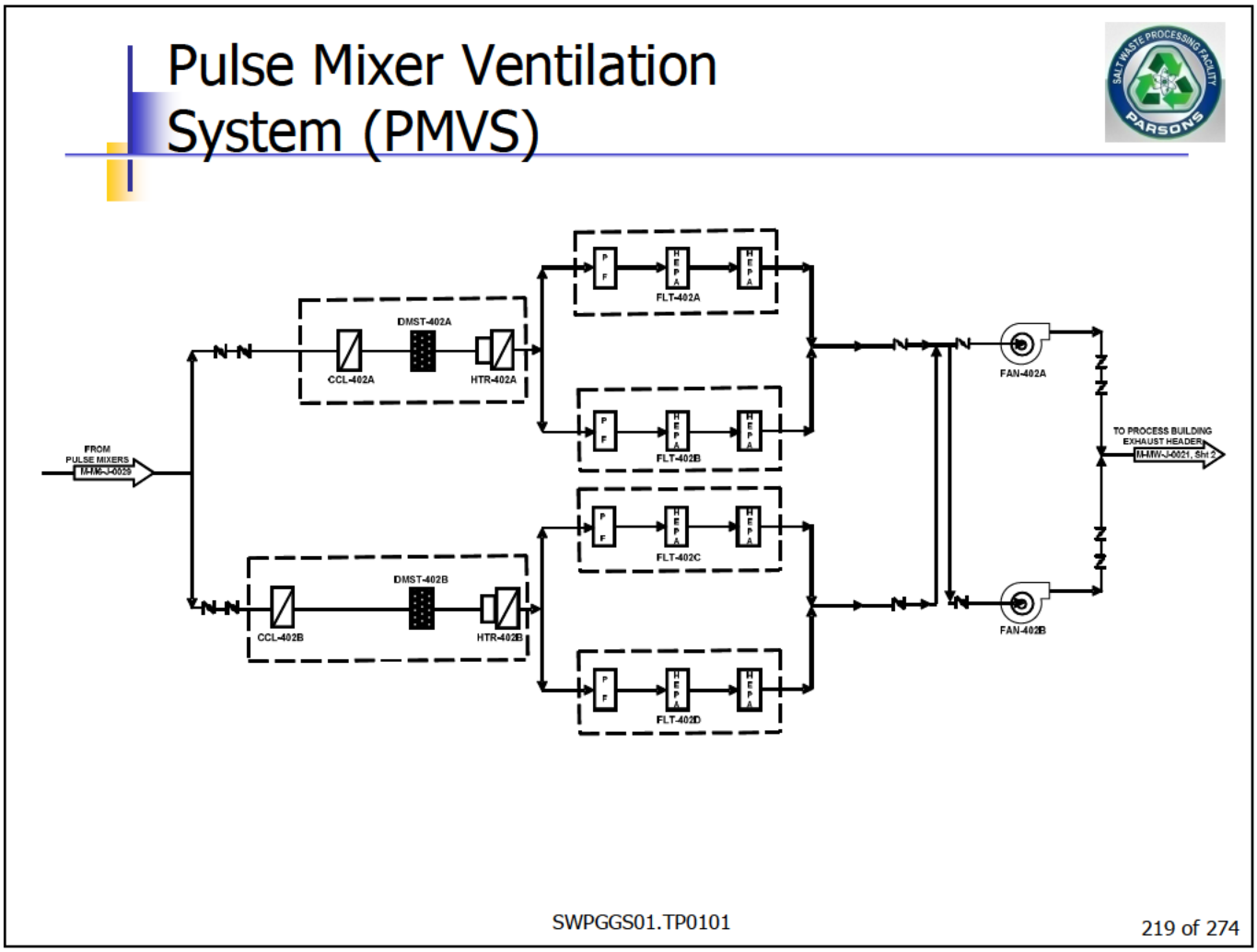

Pulse Mixer Ventilation System (PMVS) Flow Path

Exhaust air from the APAs is drawn through one of two 100%-capacity moisture removal and filtration units by the PMVS exhaust fans prior to its release to the atmosphere. One moisture removal and filtration unit is normally in operation, with the second on standby.

The PMVS contains two 100%-capacity exhaust fans (FAN-402A/B). Each fan is capable of pulling the required flow rate of exhaust air (2,000 cfm) from the PMVS.

The inlet air is first cooled by a chilled water cooling coil (CCL-402A/B) to lower the dew point of the air (i.e., dehumidify). This process will condense much of the water vapor in the air stream. The cooled air is then ducted to a demister (DMST-402A/B) to remove any entrained water droplets. Any liquid removed from the air stream by the cooling coil or demister is drained to the ASDT. The exhaust air is next ducted to an electrical heater unit (HTR-402 A/B) to raise the temperature of the flowing air mixture to evaporate any remaining liquid within the air stream to prevent damage to the downstream HEPA filters. The treated dry air is next ducted to the HEPA filtration units (FLT-402A/B/C/D).

Two 50%-capacity HEPA filtration units are provided in parallel in each of the moisture removal and filtration unit trains. Each HEPA filtration unit consists of a roughing pre-filter to trap any large particles in the air stream and two stages of HEPA filtration to remove fine particulates before the air is released to the atmosphere. The HEPA filters have particulate removal efficiency of 99.97% at 0.3-micron particle size.

Plant Water Systems

Clean water is needed to provide:

- Process water additions
- Chemical dilution
- Flushing
- Heating
- Cooling
- Personnel consumption and use

Plant Water Systems

This is accomplished through the use of the following integrated systems:

- Domestic Water System
- Process Water System
- Deionized Water System
- Process Chilled Water System
- Tempered Water System

Domestic Water System

Provides clean, continuous source of potable water for:

- Safety showers/eyewash stations,
- Drinking fountains,
- Personnel sinks, showers, toilets, and
- Water heaters

The Domestic Water System distribution header also provides:

- Make-up water to the Process Water Tank
- Make-up water to the Deionized Water Storage Filter Skid

SWPGGS01.TP0101 222 of 274

Domestic Water System

The purpose of the SWPF Domestic Water System is to provide a clean, continuous source of potable water for various uses.

Loads for the Domestic Water System include water for safety showers/eyewash stations, drinking fountains, sinks, refrigerators, icemakers, personnel showers, toilets, hose bibs, and water heaters.

The Domestic Water System distribution header also provides make-up water to the Process Water Tank and the Deionized Water Filter Skid.

Process Water System

Provides clean water to:

- Sludge Solids Receipt Tank (TK-104)
- Caustic Dilution Feed Tank (TK-108)
- Process Water Distribution Header
  - Neutralization Tank (TK-317)
  - Pump Seal Tanks
  - Wet sumps
  - Make-up to heat recovery system
  - Make-up to chiller systems, and
  - flush water distribution headers

SWPGGS01.TP0101

223 of 274

Process Water System

The flush water header provides flush water to process vessels, equipment, cells, liners, and labyrinth area. Flush water is used to spray down process vessel internals, cell and labyrinth areas to reduce contamination levels. Flush water is also used to flush process equipment in preparation for contactor maintenance.

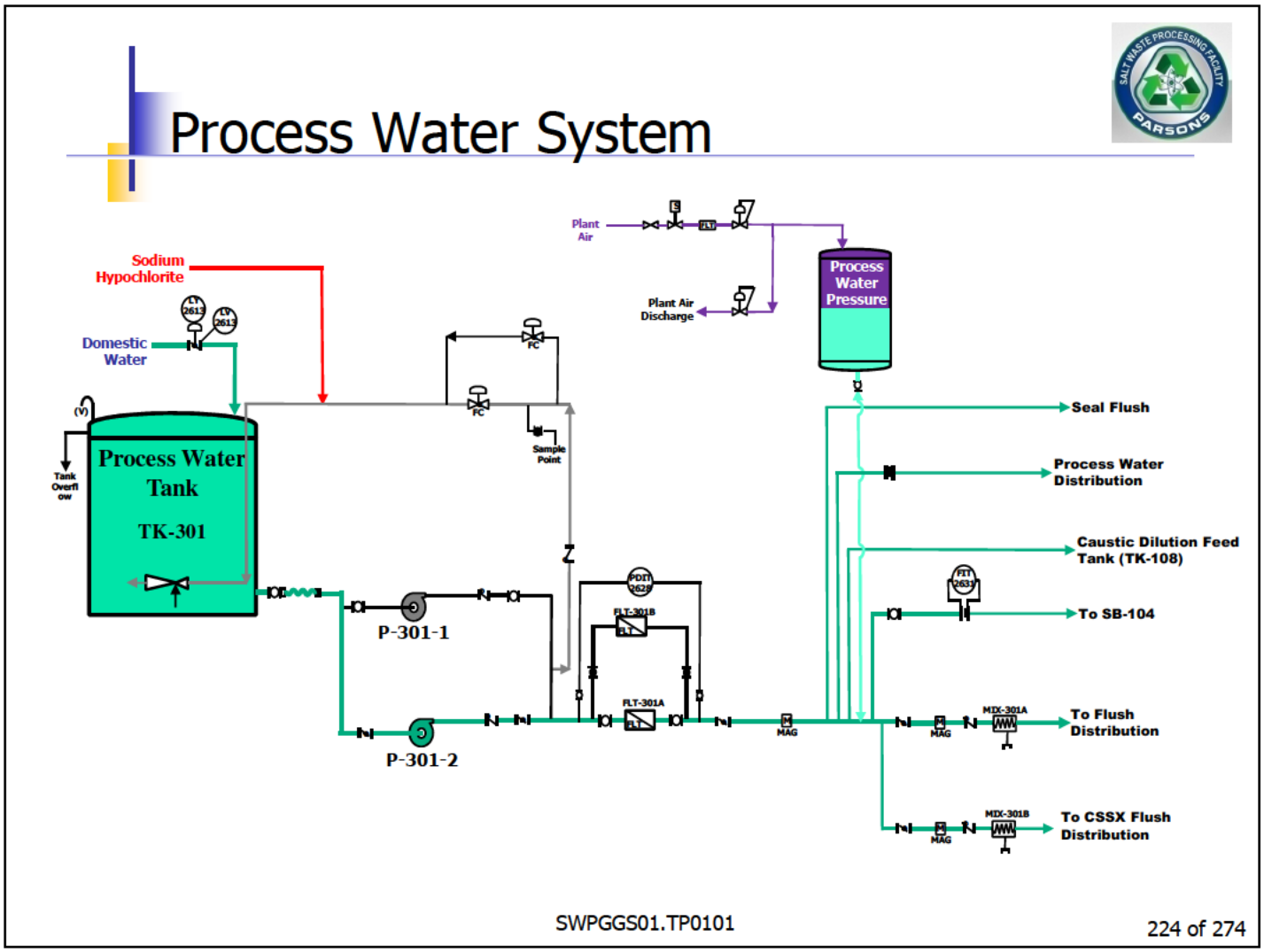

Process Water System Flow Paths

Sodium hypochlorite is added to process water for microbial prevention

Deionized Water System

Provides deionized water for:

- Caustic-Side Solvent Extraction (CSSX)
  (mixed with nitric acid [HNO_3] as strip solution)
- Filter cleaning make-up tanks
- Cleaning Solution Dump Tanks (CSDT-A/B),
- Nitric Acid Scrub Make-up Tank (TK-307),
- Filter Cleaning Caustic Tank (TK-107),
- Caustic Make-up Tank (TK-303),
- Filter Cleaning Acid Feed Tank (TK-106), and
- Analytical Laboratory

SWPGGS01.TP0101 225 of 274

Deionized Water System

The DI Water Package Unit (IX-312) is provided to supply DI water for chemical solution mixing, process chemistry blending, and laboratory service water. Domestic water will be supplied to the DI Water Package Unit.

Deionized Water System

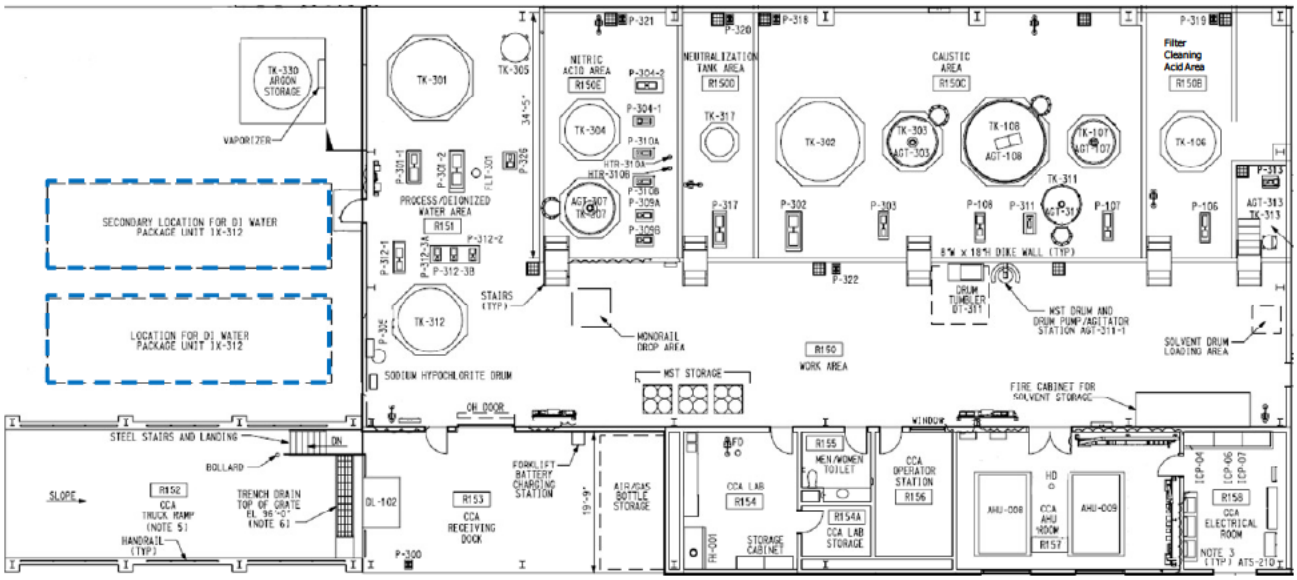

SWPGGS01.TP0101

226 of 274

Deionized Water System

The DI Water Package Unit is located outside of the west wall of the Cold Chemicals Area.

Process Chilled Water System

Maintains various process tanks and heat exchangers within predetermined temperature control bands.

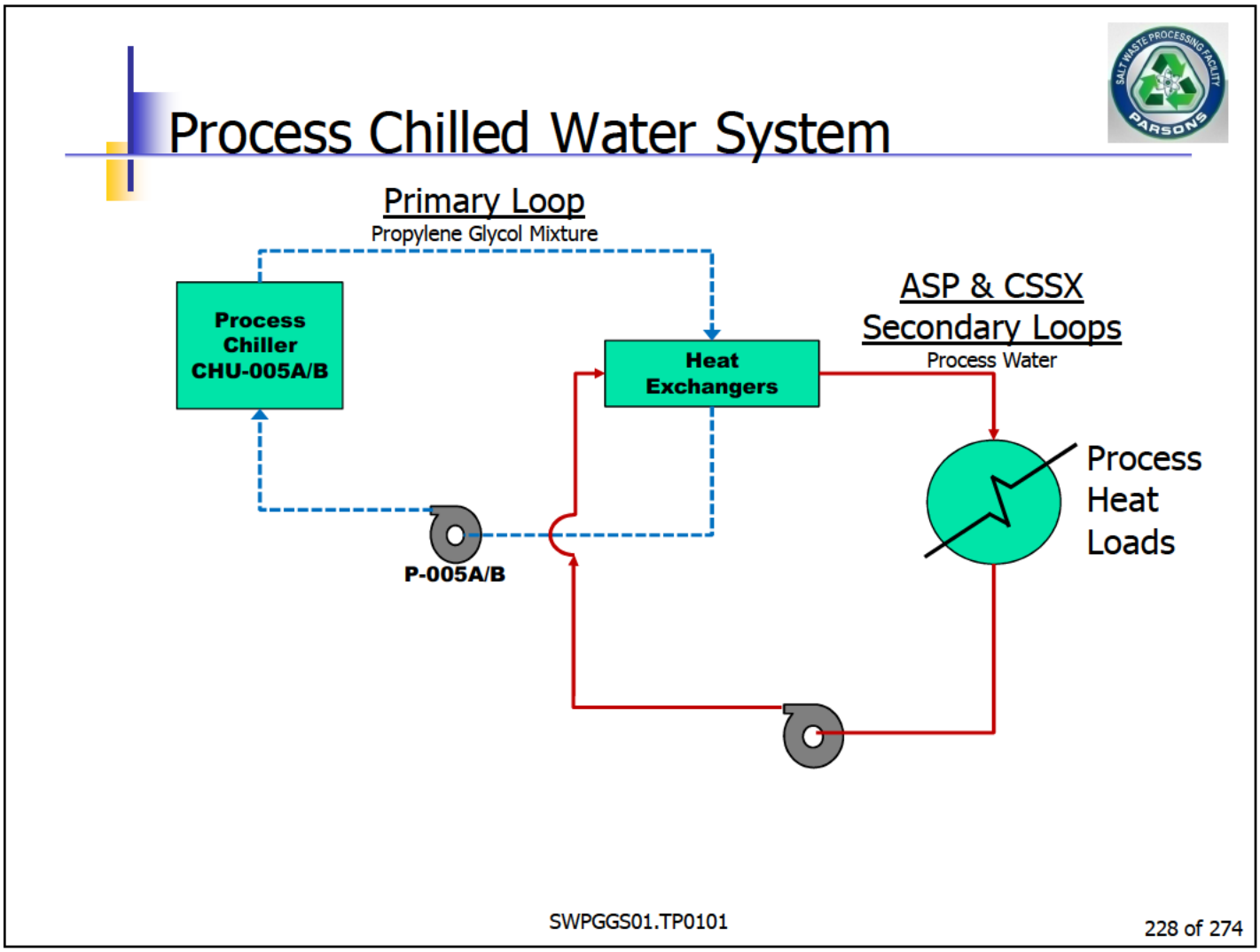

Process Chilled Water System Flow Paths

PCWS is circulated through a closed-loop primary/secondary loop system to provide radiological confinement, prevent leakage of chilled water chemicals into process systems, and preclude any radiological decomposition of the glycol.

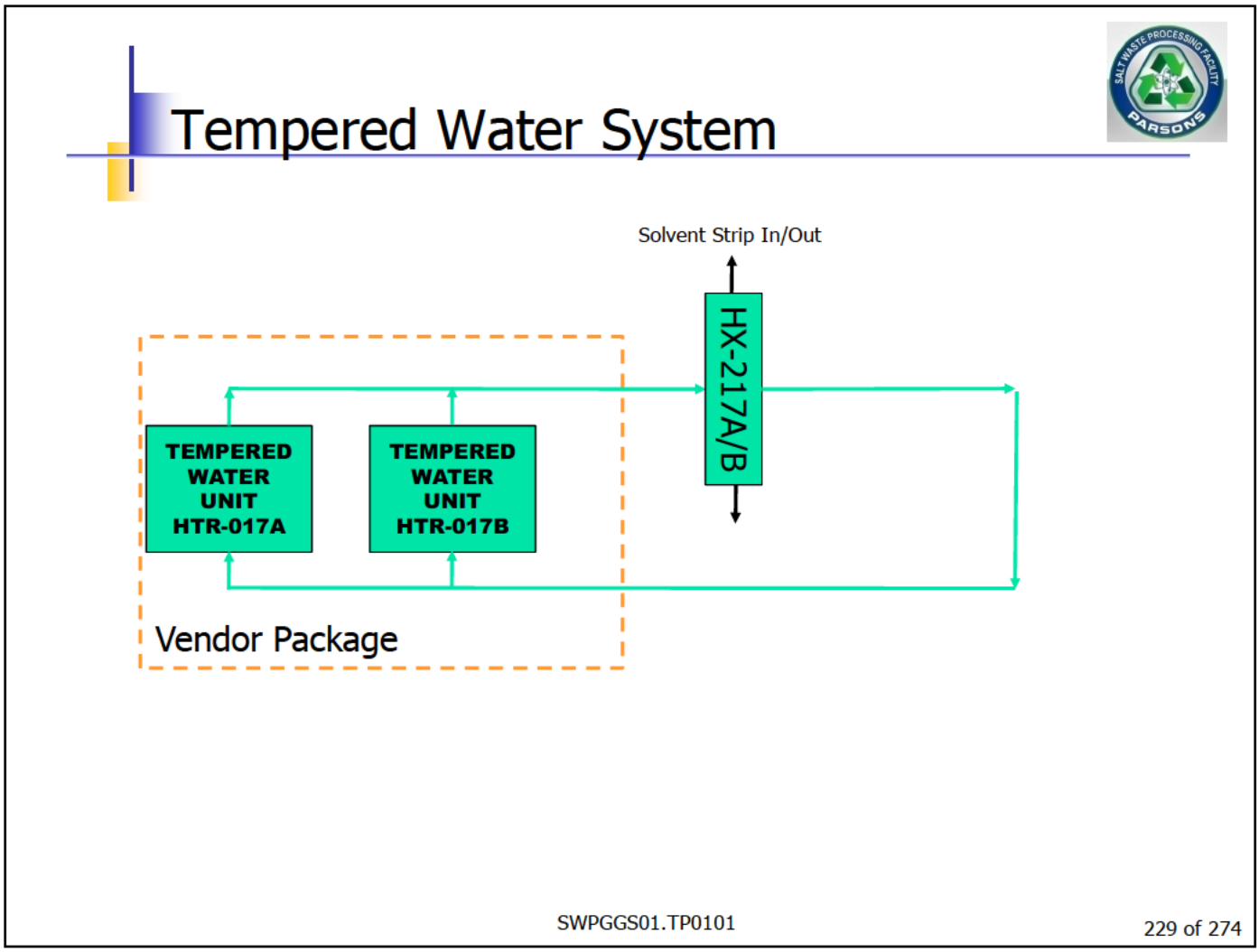

Tempered Water System

Two, vendor supplied Tempered Water Units (HTR-017A/B) pass heated water through heat exchanger HX-217A/B to regulate Solvent Strip Solution. Cooling Water flow is regulated to maintain the tempered water to 86 - 102°F.

Tempered Water System

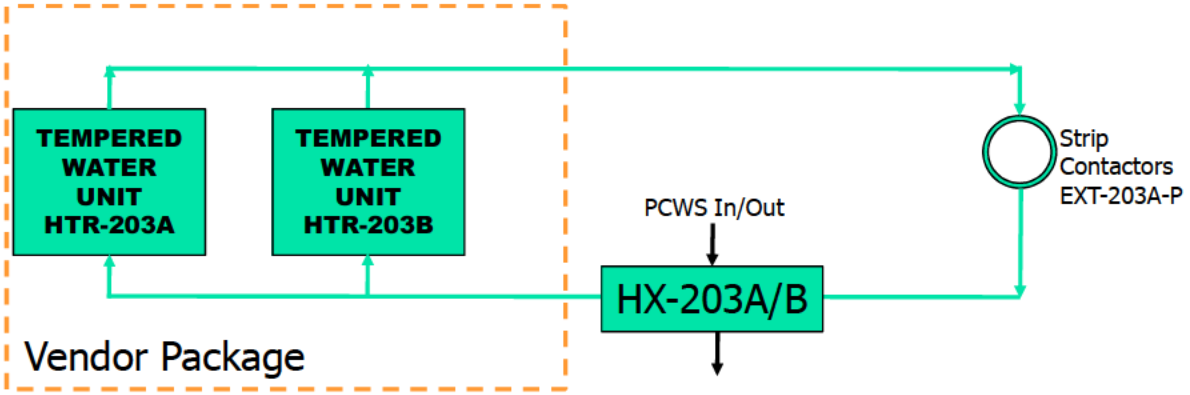

SWPGGS01.TP0101

230 of 274

The Tempered Water Units HTR-203A/B provides hot water to the Strip Contactors jackets to help maintain 86 - 102°F to optimize cesium removal.

Tempered Water Units (HTR-017A/B) Location

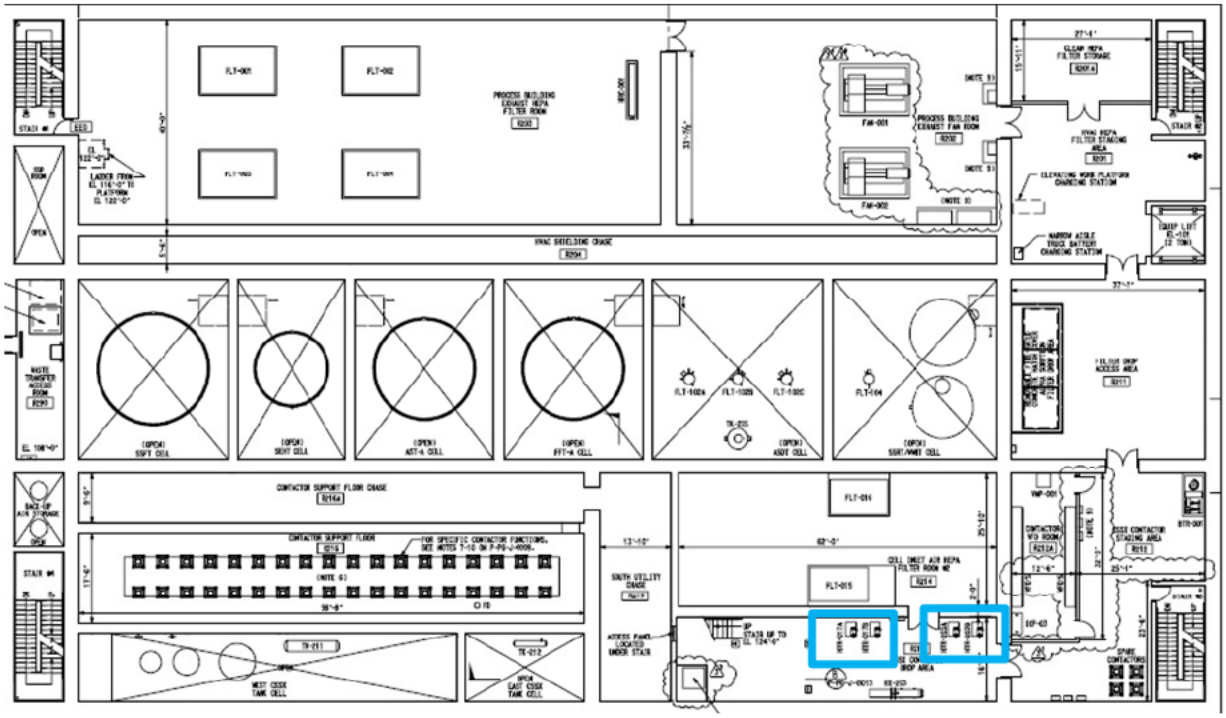

SWPGGS01.TP0101

231 of 274

Tempered Water Units (HTR-017A/B) Location

The Tempered Water Units HTR-017A/B and HTR-203A/B are located in the CSSX Contactor Drop Area (Room 213).

Plant Electrical System

- Normal Electrical Power
  - Low Voltage Electrical Power System
- Uninterruptable Power Supply
- Standby Power (1000-kW Diesel Generator)
  - 4 day fuel supply

SWPGGS01.TP0101 232 of 274

Plant Electrical System

Purpose
To provide a continuous source of reliable power to equipment associated with the SWPF.

Normal Electrical Power System
Supplied by Savannah River Site (SRS) H-Area Electrical Distribution System to the SWPF NEPS, the NEPS provides two 13.8-kV, 3-phase, 60-Hz redundant cross connected feeds to process heaters, pumps, coolers, compressors, control systems and the Low Voltage Electrical Power System 480VAC transformers.

Low Voltage Electrical Power System
The LVEPS provides 240/120-V single-phase electrical power to all receptacle-type devices.

UPS
Provides uninterrupted electrical power to essential electrically powered control systems.
Located in the UPS room (R118A) adjacent to the control room (R116).

Standby Electrical Power System
A back-up and local source of bulk power to selected electrical loads for the SWPF. Standby power is provided by a 1000-kW diesel generator with a four-day fuel supply. Upon loss of off-site power, load shedding occurs and loads are brought on-line in accordance with the DCS restart sequence:

- HVAC,
- UPS,
- Selected transfer pumps, and

120V to smaller loads (lighting panel, receptacles, etc.).

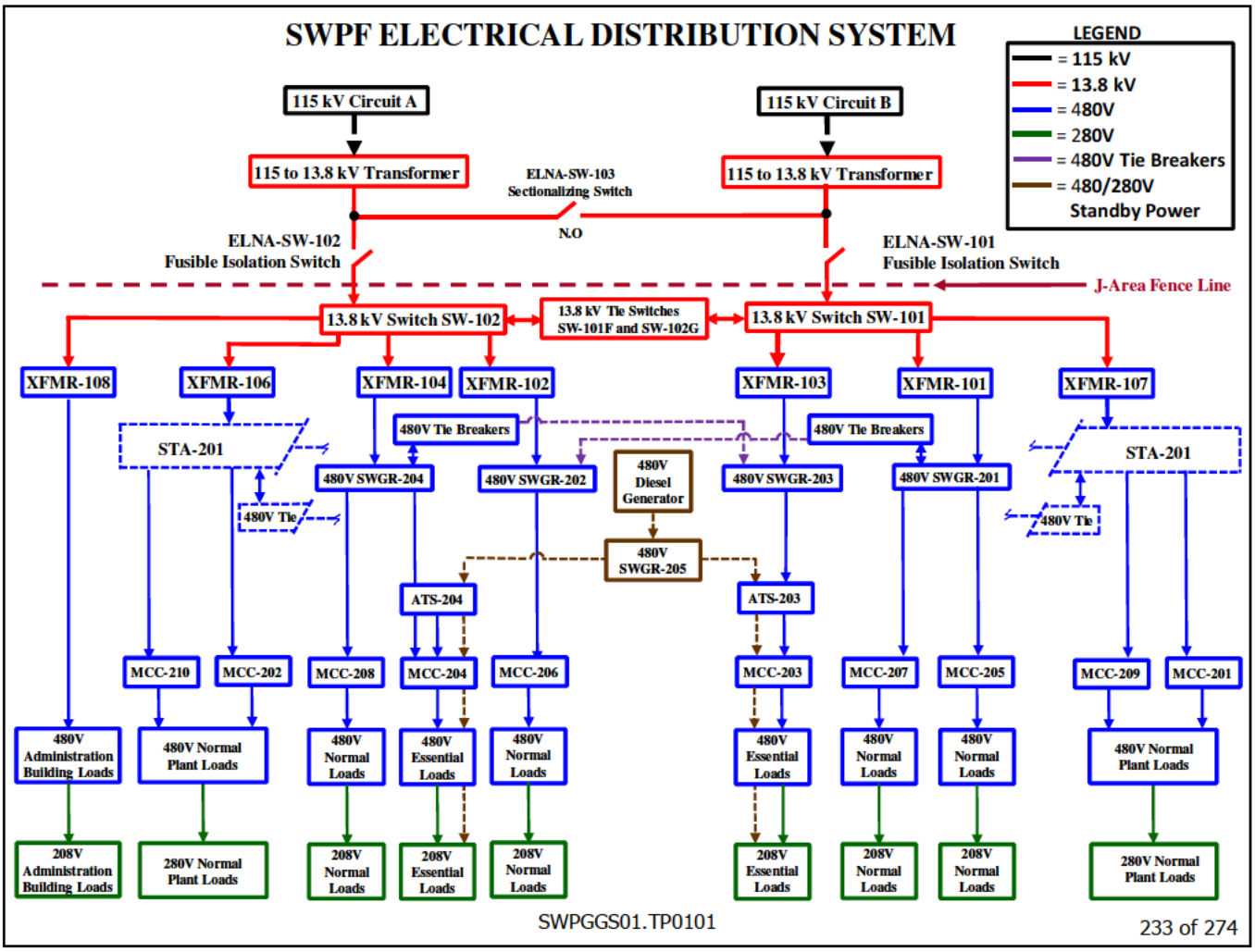

Electrical Distribution System

The 13-8-kV power line enters the facility at pad-mounted switchgear located northwest of the SWPF Process Building.

SW-101 pad mounted switch line up supplies 13.8-kV electrical power to the following loads:

- Process Building Transformer No. 101 (XFMR-101),
- Process Building Transformer No. 103 (XFMR-103),
- Southern Transformer Substation STA-210 Transformer No. 107 (XFMR-107), and
- Main supply tie breaker SW-101F to SW-102.

SW-102 pad mounted switch line up supplies 13.8-kV electrical power to the following loads:

- Process Building Transformer No. 102 (XFMR-102),
- Process Building Transformer No. 104 (XFMR-104),
- Southern Transformer Substation STA-210 Transformer No. 106 (XFMR-106)
- Substation No. 1 (Admin. Bldg.) via Transformer 108 (XFMR-108), and
- Main supply tie breaker SW-102G to SW-101.

SW-101 and SW-102 are cross-connected (main-tie-main) in a manner that allows all electrically driven equipment to be energized and operated in the event of a major 115 or 13.8-kV transformer power failure.

Fire Protection System

Provides fire suppression, fire detection, and alarm notification to the facility occupants and to the Savannah River Site (SRS) Fire Department.

SWPGGS01.TP0101

234 of 274

Fire Protection System

The purpose of the Fire Protection System is to minimize:

- The potential for occurrence of a fire or related event;
- A fire that causes an onsite or offsite release of hazardous and radiological material that will threaten the health and safety of employees, the public, or the environment;
- Vital U.S. Department of Energy (DOE) programs suffering unacceptable interruptions as a result of fire and related hazards;
- Property losses from fire and related events exceeding defined limits;
- Critical process controls and safety-related systems being damaged as a result of a fire or related events; and

To implement a comprehensive FP program that provides an acceptable level of life safety from fire and related events to site personnel and the public.

Fire Protection System

FP systems will consist of a combination of suppression and detection systems, each designed for specific applications commensurate with the hazard present inside and outside the facility.

SWPGGS01.TP0101 235 of 274

Fire Protection System

Two 8-inch fire water supply lines will be extended from the existing system to form a loop around the entire SWPF site. The 8-inch loop will supply area fire hydrants and feed 6-inch lines that will enter the SWPF Process Building at the east and west end. The supply main ties into a loop header that supplies vertical standpipes for each of the four stairwells and the Process Building automatic sprinkler systems.

In addition to active Fire Protection (FP) systems, the SWPF utilizes passive Fire Protection (FP) features or compartmentalization, in the form of 2-hour fire rated barriers which serve to enhance the life safety features of the facility, isolate hazardous occupancies, and minimize fire loss potential.

Fire extinguishers are installed throughout the facility.

Heating, Ventilating, and Air Conditioning (HVAC) ducts have smoke detection and fire dampers.

The final exhaust High Efficiency Particulate Air (HEPA) filters are protected by an ember screen in the upstream ductwork and by a manual water spray system. Heat detectors in the filter enclosures will send an alarm signal to the Fire Alarm Control Panel.

Fire Hydrant Locations

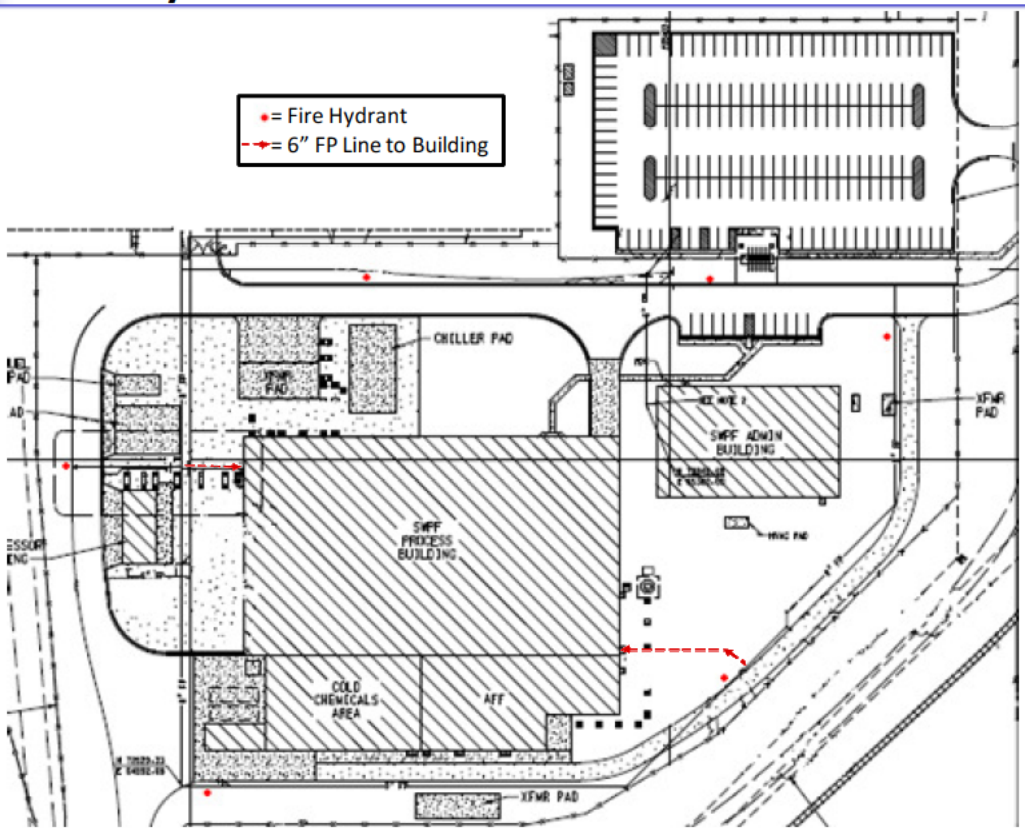

SWPGGS01.TP0101

236 of 274

Fire Hydrant Locations

6 hydrants

Process Building Fire Detection

- Smoke Detection
  - Smoke detector locations
    - Electrical Rooms
    - Control Room
    - Other select locations TBD
  - Fusible link-type heat-actuated dampers
    - HVAC ductwork

Fire Alarm System

- Fire Alarm Control Panel (FACP)
- Manual Pull Stations

SWPGGS01.TP0101 238 of 274

Fire Alarm System

The alarm and detection systems will consist of a main Fire Alarm Control Panel (FACP), which reports to the Savannah River Site Operations Center (SRSOC) and will be the supervisory interface for all initiating devices and notification appliances associated with the overall Fire Protection (FP) system.

Flow and tamper switches located on each sprinkler system will report to the Fire Alarm Control Panel (FACP). This indication of system actuation will provide local notification and notification to the Savannah River Site Operations Center (SRSOC).

Manual pull stations will be provided at each exterior exit and at each stairwell level.

Distributed Control System

The DCS, consisting of Basic Process Control System, Safety Instrumented System, and Instrument Control Panels (ICPs) provide the primary process monitoring and control functions with a very high degree of reliability and redundancy.

SWPGGS01.TP0101

239 of 274

Distributed Control System

Purpose of the Distributed Control System is to provide the primary process monitoring and control functions with a very high degree of reliability and redundancy.

Distributed Control System

- Basic Process Control System (BPCS)
  - Examples:
    - Opening valves to transfer materials
    - Starting Pumps
- Safety Instrumented System (SIS)
  - Examples:
    - Detect HEPA Filter Breakthrough
    - Detect loss of PVVS vacuum in header

SWPGGS01.TP0101 240 of 274

Distributed Control System

The DCS contains two major functional elements:

<u>The BPCS</u>
Monitors, controls and provide the human interface to allow safe, effective, and efficient operation of the process. It is the largest component of the DCS.

<u>The SIS</u>
Provides the credited safety interlocks required for safe operation. The SIS executes Safety Instrumented Functions (SIF), as described in the Safety Basis (SB). The SIS monitors specific SIF parameters and/or events and initiates specific control functions required to prevent or mitigate the consequences of an abnormal condition.

The two are integrated; however, the SIS is functionally independent from the BPCS.

Control Room (CR)

The central control point for all process and facility support functions for monitoring, controlling, alarming, and communications internal and external of the facility.

SWPGGS01.TP0101

241 of 274

Control Room (CR)

The primary CR contains four (4) Operator workstations where primary processes are monitored and controlled.

The CR supervisor has a workstation in his/her office, with higher-level capabilities and links to other facility support and communications functions.

Control Room (CR)

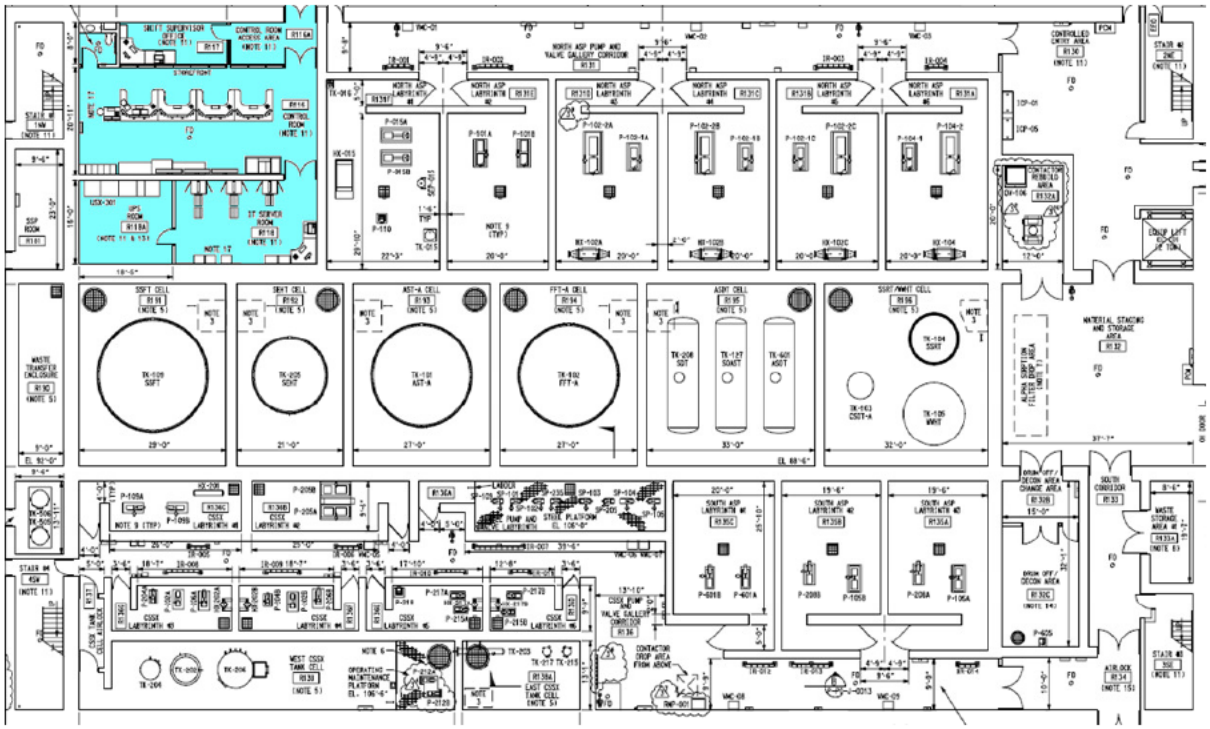

SWPGGS01.TP0101

242 of 274

Control Room (CR) Location

The Control Room is located in the northwest end of the Process Building inside the PC-3/seismic containment structure.

The servers, programming workstation, and Ethernet LAN switches are located in the Information Technology (IT) equipment room adjacent to the CR.

Safe Shutdown Panel

An enhanced Operator Workstation, with control and monitoring access to selected key instruments and controls in the facility.

It is generally used for emergency shutdown of the facility when the CR is no longer habitable or functional, and when evaluating and monitoring the facility for post-event re-entry preparations.

SWPGGS01.TP0101 243 of 274

Safe Shutdown Panel

The SSP has limited display capability and is programmed to receive only essential and higher level process inputs essential to safe shutdown of primary processes and direct process support systems.

Safe Shutdown Panel Location

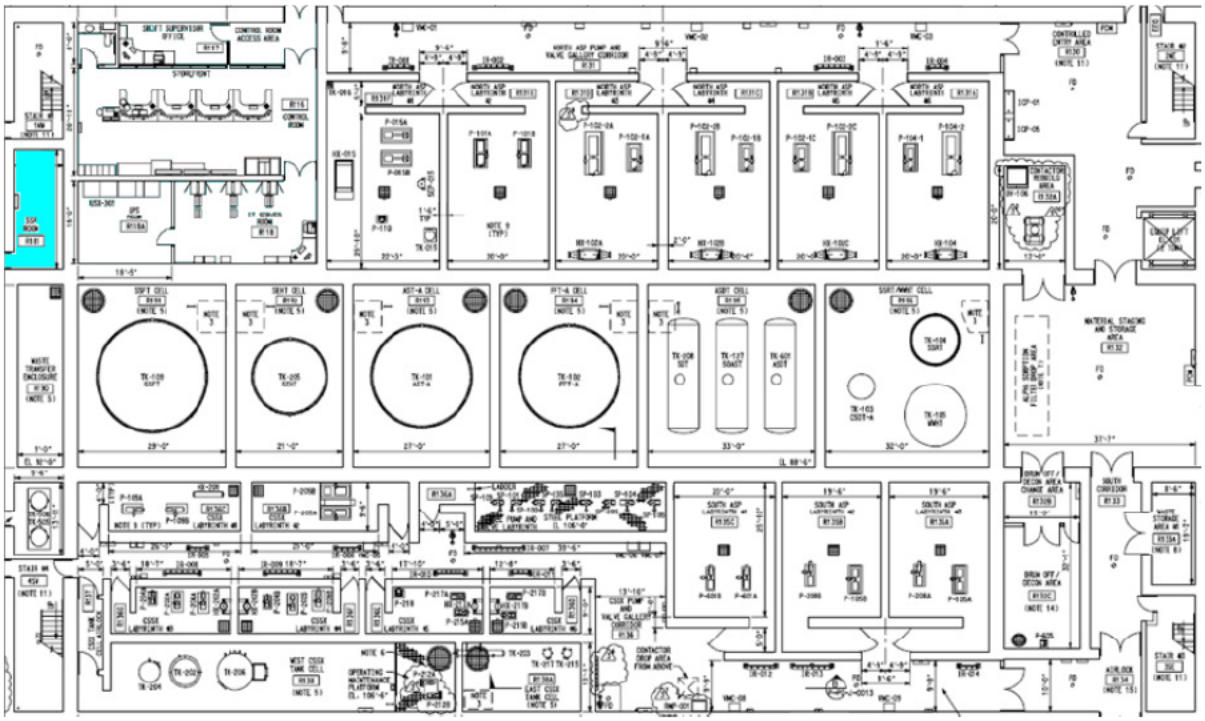

SWPGGS01.TP0101

244 of 274

Safe Shutdown Panel Location

The Safety Shut Down Panel Room (R181) is located adjacent to the CR and has a direct access/egress outside the facility.

Conclusion

Listed the BOP Systems

- Plant Air System
- Air Dilution System
- Heating Ventilation and Air Conditioning System
- Plant Water System
- Plant Electrical System
- Fire Protection System
- Distributed Control System

Salt Waste Processing Facility
MODULE 8
Operations Radiation Overview

Objectives

At the completion of the training, the student will be able to:

1. DESCRIBE how an unstable atom reaches stability.
2. DESCRIBE the decay modes for:
   - Alphas
   - Betas
   - Gammas
   - Neutrons
3. DEFINE units of measure for radiation/contamination.
4. DISCUSS three ways to reduce internal and external exposures.

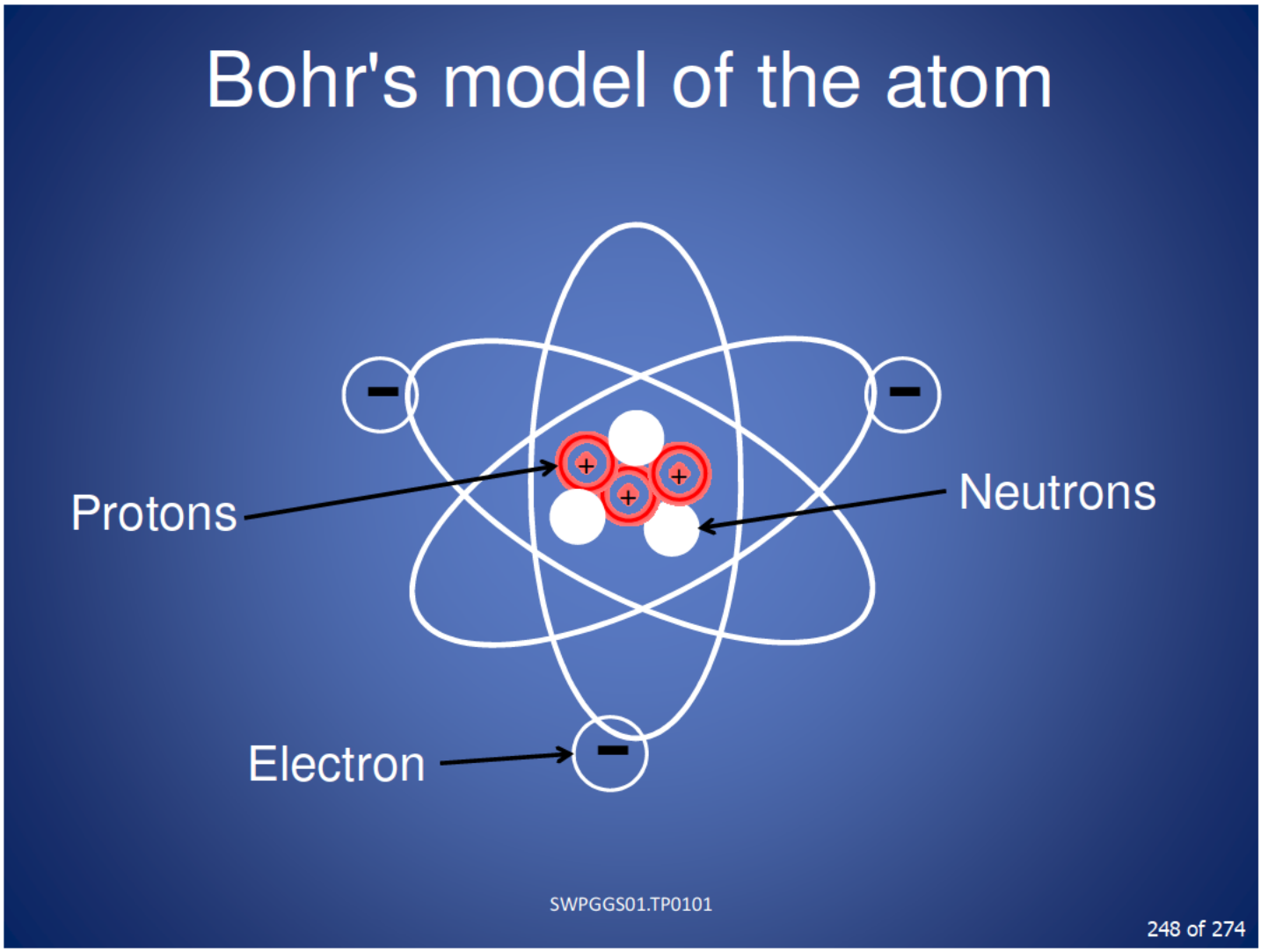

Protons

- Located in the nucleus of the atom
- Positive electrical charge
- Number of protons determines element identity
- Atoms of the same element have the same number of protons, but can have a different number of neutrons.

Neutrons

- Located in the nucleus of the atom
- No electrical charge
- Atoms, which have the same number of protons but different numbers of neutrons are called isotopes.
- Isotopes have the same chemical properties; however, the nuclear properties can be quite different.

Electrons

- Orbit the nucleus
- Negative electrical charge
- Electrons determine the chemical properties of an atom

Stable and Unstable Atoms

- Only certain combinations of neutrons and protons result in stable atoms.
  - If there are too many or too few neutrons for a given number of protons, the resulting nucleus will contain too much energy and will not be stable.
  - The unstable atom will try to become stable by giving off excess energy in the form of particles or rays (radiation).

<u>These unstable atoms are also known as radioactive atoms</u>.

Charge of Atoms

- The number of electrons and protons determines the overall electrical charge of the atom.
- The term ion is used to define atoms or groups of atoms that have a net positive or negative electrical charge.
  - No charge (neutral) - electrons equals the number of protons
  - Positive charge (+) –more protons than electrons
  - Negative charge (-) –more electrons than protons

Ionization

- Ionization is the process of removing electrons from neutral atoms.
- Ionization is not unique or specific to nuclear radiation. Energy released from high temperatures or electrical discharges can potentially cause ionization.

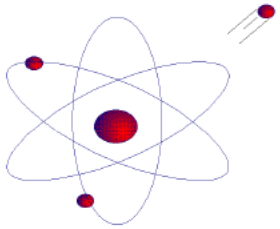

SWPGGS01.TP0101 251 of 274

Ionization

If enough energy is supplied to remove electrons from the atom, the remaining atom has a positive charge.

Ionization should not be confused with radiation. Ions (or ion pairs) produced as a result of radiation exposure allow the detection of radiation.

Ionizing Radiation

- Energy (particles or rays) emitted from radioactive atoms and some devices can cause ionization.
- The four basic types of ionizing radiation that are of primary concern in the nuclear industry are:
  - Alpha particles
  - Beta particles
  - Gamma or X-rays
  - Neutron particles

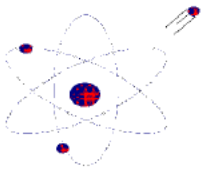

SWPGGS01.TP0101 252 of 274

Ionizing Radiation

Ionizing radiation particles remove electrons from atoms by charged particle attraction/repulsion or by direct impact.

Ionizing electromagnetic energy (x-rays and gamma rays) can remove electrons by vibrating electrons enough to knock them out of orbit.

Decay Modes - Alpha

- The alpha particle has a large mass and consists of two protons, two neutrons, and no electrons.
  - Range
    The alpha particle deposits a large amount of energy in a short distance of travel.
  - Shielding
    Most alpha particles are stopped by few inches of air, a sheet of paper, or the dead layer (outer layer) of skin.

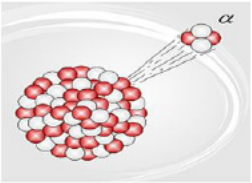

SWPGGS01.TP0101 253 of 274

Decay Modes

Alpha

The alpha particle has a large mass and consists of two protons, two neutrons, and no electrons.
It is a highly charged particle (charge of plus two) that is emitted from the nucleus of an atom.

The positive charge causes the alpha particle (+) to strip electrons (-) from nearby atoms as it passes through the material, thus ionizing these atoms.

Range

The alpha particle deposits a large amount of energy in a short distance of travel. This large energy deposit limits the penetrating ability of the alpha particle to a very short distance. This range in air is about one to two inches.

Shielding

Most alpha particles are stopped by few inches of air, a sheet of paper, or the dead layer (outer layer) of skin.

Decay Modes - Beta

- The beta particle has a small mass and is usually negatively charged.
  - Range
    Because of its charge, the beta particle has a limited penetrating ability. Range in air is about 10 feet.
  - Shielding
    Most beta particles can be shielded by plastic, glass, metal foil, or safety glasses.

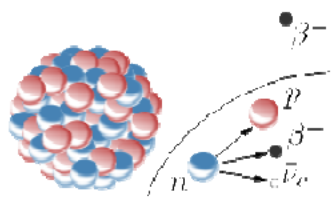

SWPGGS01.TP0101 254 of 274

Decay Modes

Beta

The beta particle has a small mass and is usually negatively charged. It is emitted from the nucleus of an atom and has an electrical charge of minus one.

The beta particle is physically identical to an electron.

Ionization occurs due to the repulsive force between the beta particle (-) and the electron (-), which both have a charge of minus one.

Range

Because of its charge, the beta particle has a limited penetrating ability. Range in air is about 10 feet.

Shielding

Most beta particles can be shielded by plastic, glass, metal foil, or safety glasses.

Decay Modes - Gamma/X-Ray

- Gamma/x-ray radiation is an electromagnetic wave or photon and has no electrical charge.
  - Range

    Because gamma/x-ray radiation has no charge and no mass, it has a very high penetrating ability. The range in air is very far. It will easily go several hundred feet.

  - Shielding

    Gamma/x-ray radiation is best shielded by very dense materials, such as concrete, lead or steel.

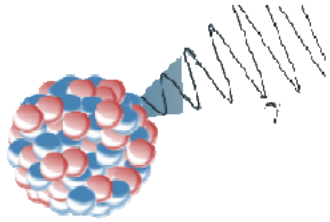

SWPGGS01.TP0101 255 of 274

Decay Modes

Gamma/X Ray

Gamma/x-ray radiation is an electromagnetic wave or photon and has no electrical charge. Gamma rays are very similar to x-rays.

The difference between gamma rays and x-rays is that gamma rays originate inside the nucleus and x-rays originate outside the nucleus.
Gamma/x-ray radiation can cause ionization as a result of direct interactions with orbital electrons.

Range

Because gamma/x-ray radiation has no charge and no mass, it has a very high penetrating ability. The range in air is very far. It will easily go several hundred feet.

Shielding

Gamma/x-ray radiation is best shielded by very dense materials, such as concrete, lead or steel.

Decay Modes - Neutron

- Neutron radiation consists of neutrons that are ejected from the nucleus.

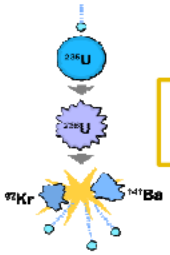

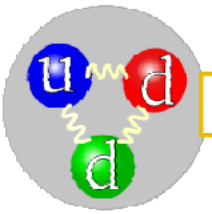

- Range

  Because of the lack of a charge, neutrons have a relatively high penetrating ability and are difficult to stop. The range in air is very far. Like gamma rays, they can easily travel several hundred feet in air.

- Shielding

  Neutron radiation is best shielded by materials with a high hydrogen content, such as water, concrete, or plastic.

SWPGGS01.TP0101 256 of 274

Decay Modes

Neutron

Neutron radiation consists of neutrons that are ejected from the nucleus. A neutron has no electrical charge. A direct interaction occurs as the result of a collision between a neutron and a nucleus. A charged particle or other ionizing radiation may be emitted during this interaction. The emitted radiation can cause ionization in human cells. This is called "indirect ionization."

Range

Because of the lack of a charge, neutrons have a relatively high penetrating ability and are difficult to stop. The range in air is very far. Like gamma rays, they can easily travel several hundred feet in air.

Shielding

Neutron radiation is best shielded by materials with a high hydrogen content, such as water, concrete, or plastic

SUMMARY

Decay modes
Alpha – Beta – Gamma – Neutron

PROPERTIES OF IONIZING RADIATION

TYPE OF RADIATION	ALPHA	BETA	GAMMA/ X-RAY	NEUTRON
MASS	large	small	none	large
CHARGE	+2	+/- 1	none	none
RANGE (in air)	1-2 inches	10 ft	hundreds of feet	hundreds of feet
SHIELDING	paper, outer layer of skin	plastics, wood, glass	lead, concrete, iron	water, poly-ethylene, concrete
HAZARD	internal	skin, eye, or internal	external/internal	external/internal

Units of Measure - Radiation

- Roentgen (R)
  - The roentgen is a unit for measuring radiation exposure.
- Rad (Radiation Absorbed Dose)
  - The RAD is a unit for measuring absorbed dose in any material.
- Rem (Roentgen equivalent man)
  - The rem is a unit for measuring dose equivalence. It is the most commonly used unit and pertains to the human body.

SWPGGS01.TP0101 258 of 274

Roentgen (R)
The roentgen is a unit for measuring radiation exposure. It is defined only for the radiation interaction with air, and it applies only to gamma and x-rays. It does not relate the biological effects of radiation to the human body.

Rad (Radiation Absorbed Dose)
The RAD is a unit for measuring absorbed dose in any material. It is defined for any material. It applies to all types of radiation. It does not take into account the potential effect that different types of radiation have on human tissue.

Rem (Roentgen equivalent man)
The rem is a unit for measuring dose equivalence. It is the most commonly used unit and pertains to the human body. The rem takes into account the energy absorbed (dose) and the biological effect on the body due to the different types of radiation.

Radiation Dose and Dose Rate
Dose is the amount of radiation you receive. Radiation dose rate is the rate at which you receive the dose.

Units of Measure – Radioactivity/Contamination

Radioactivity is measured in the number of disintegrations the radioactive material undergoes in a certain period of time.

Disintegrations per minute (dpm) or counts per minute (cpm)

The Curie [Ci] – based on the radioactivity of a gram of Ra-226

One curie (unit of radioactivity) =2,200,000,000,000 (2.2 x 10^{12}) disintegrations per minute (dpm) or 37,000,000,000 (3.7 x 10^{10}) disintegration per second (dps)

SWPGGS01.TP0101 259 of 274

Radiation Protection counting systems (equipment) are based on decay mode, interactions, detection statistics and geometries. Reported as alpha or beta-gamma.

For surface contamination: radioactivity is quantified in units of area such as 100 cm^2 [example: dpm / 100 cm^2]

For volumetric contamination such as air, water, soil: radioactivity is quantified in units of Volume or Mass such as liters, cubic feet, or grams [examples: Ci/litre, Ci/cm^3, or Ci/gram]

Dosages are in Roentgen Equivalent Man (rem)

- 0 - 25 - No injury evident. First detectable blood change at 5 rem.
- 25 -100 - Definite blood changes at 25 rem. No serious injury.
- 100-200 - Injury and possible disability.
- 200-400 - Injury and disability likely, death possible.
- 400-500 - 50% of exposures are fatal.
- 500-1,000 - Up to 100% of exposures are fatal.
- 1,000-over - 100% likely fatal.

SWPGGS01.TP0101

Personnel Dose Limits

Classification	Type of Exposure	10CFR835 Limit	SWPF Administrative Control Level
General Employee	Total Effective Dose Internal + External	5 rem	1 rem
	Equivalent Dose to lens of the eye	15 rem	3 rem
	Equivalent Dose to the skin or extremity	50 rem	10 rem
	Committed Equivalent Dose (Organ)	50 rem	10 rem
Fetus/Embryo (Declared pregnant)	Equivalent Dose (gestation period)	0.5 rem	0.4 rem
Minors Visitors/Public	Total Effective Dose (Whole body) Internal + External	0.1 rem	0.08 rem

From PP-RP-4501, As Low As Reasonably Achievable Review

SWPF Radiological Waste Characterization

Processing of the incoming radioactive liquid waste (RLW) in the SWPF involves the isotopic separation, concentration and/or depletion of alpha, beta and gamma emitters into three differing radioactive waste streams, each having the same isotopes present within them, at varying ratios.

SWPF Radiological Waste Characterization

The incoming RLW originates from one and/or a combination of the 49 existing storage tanks on the SRS site. The inbound waste has chemical and radiological limits imposed by a defined Waste Acceptance Criteria (WAC) and is sampled and analyzed prior to being transferred into the SWPF.

SWPF Radiological Waste Characterization

From a Health Physics / Radiation Protection perspective the "primary" radiological constituents of concern in all of the various waste process streams are:

- Cesium-137 has a half-life of 30.2 years and (93.5%) decays to Ba-137m, through beta emission which then subsequently emits a 0.662 MeV photon with a half-life of 2.55 minutes, to reach Ba-137 (stable).
- Sr-90 has a half-life of 28.8 years and decays to Y-90, through beta emission. Y-90 has a half-life of 64.2 hours and decays to Zr-90 (stable), through beta emission.
- Transuranic isotopes, principally Pu-238, Pu-239, Pu-240, Pu-242, Pu-244, Am-241, Am-242m, and Am-243 have varying half-lives, all decaying through alpha emission.

SWPGGS01.TP0101 264 of 274

Cesium-137

Photons (gamma) originating from the Cs-137 decay chain, are the predominant source of gamma dose rates and the primary external radiation hazard to the workforce in the SWPF. Control of this hazard is an important component of the overall Radiation Protection Program and the controls become more stringent as the Cs concentrations are increased in the CSSX process. This decay series presents a beta skin dose hazard to workers in cases of personnel (skin) contamination incidents. The inhalation hazard from Cs-137 is limited by the presence and ratios of more restrictive isotopes in the waste streams.

Sr-90

This decay series does not present an external dose hazard to the workforce, assuming appropriate cautions are taken not to allow initiation of bremstralung effects (x-ray production). This decay series presents a beta skin dose hazard to workers in cases of personnel (skin) contamination incidents. The inhalation hazard from Sr-90/Y-90 is limited by the presence and ratios of more restrictive isotopes in the waste streams.

Transuranic isotopes

These isotopes do not present an external dose or significant skin dose hazard to the workforce. The inhalation hazard from these isotopes is significant based on their published dose conversion factors. While these individual radioactivities are not significant when compared to other isotopes (Cs-137, Sr/Y-90) per unit mass of waste, collectively they accounts for > 95% of the potential internal dose received per unit mass inhaled.

Our Defenses to Reduce Internal And External Dosage

- Time
  - Minimizing time in radiation areas (Stay times are important!)
- Distance
  - Maximizing the distance from a source of radiation
- Shielding
  - Using shielding whenever possible (Permanent and Temporary)

ALARA

As Low As Reasonably Achievable

Engineering Design Controls

Radiation Shielding

- Concrete walls (up to 4' based on dose rate and habitability)
- Steel shield doors for selected labyrinth entryways
- Scatter shields for selected duct penetrations
- Offset penetrations through concrete walls
- Shielded collars or sleeves on selected piping in labyrinths

Engineering Design Controls

Contamination and Airborne Control

- Sloped Floors, Sumps and Surface Coatings
- Cascading Air System

SWPGGS01.TP0101 267 of 274

Contamination and Airborne Control

Sloped Floors, Sumps and Surface Coatings

- All labyrinths have sloping floors directing potential leakage to a recessed sump
- Adjacent hallways also slope into labyrinth entryways and then away from the entryways
- Areas were evaluated and surface coatings selected (polyurea, epoxy, primer and paint, sealed concrete, etc.) based on the potential need for decontamination.

Cascading Air System

- The facility ventilation system is a once through, non-recirculating, cascading air design.
- Air is drawn from clean (Zone 3) areas through areas of higher potential for airborne contaminants (Zone 2), then into the final areas of highest potential for airborne contaminants (Zone 1) after which it is filtered, monitored and discharged.

Engineered Monitoring

- Installation of Cameras In Each Labyrinth
  - Cameras installed in each labyrinth aiding in leak detection (visual)
  - Cameras in the labyrinth also aid in pre-job planning and oversight during entries
- Twenty-five (25) Area Radiation Monitors (ARMs)
- Twenty-eight (28) Continuous Air Monitors (CAMs)

SWPGGS01.TP0101 268 of 274

Installation of Cameras In Each Labyrinth

- Cameras installed in each labyrinth aiding in leak detection (visual)
- Cameras in the labyrinth also aid in pre-job planning and oversight during entries

Twenty-five (25) Area Radiation Monitors (ARMs)

Locations were designated, based on accessibility of areas, consideration of source term locations and shielding, and the potential for elevated dose rates. Local and remote alarm activation occurs when established set points (permissible levels) are exceeded.

Twenty-eight (28) Continuous Air Monitors (CAMs)

Locations designated, based on accessibility of areas, consideration of expected airflow dynamics, source term locations and potential release points. Local and remote alarm activation occurs when established set points (permissible levels) are exceeded.

Projected Dose Rates Dark Cells and Labyrinths

Projected Dose Rates (in mrem/hr) CPA 100' – 0"

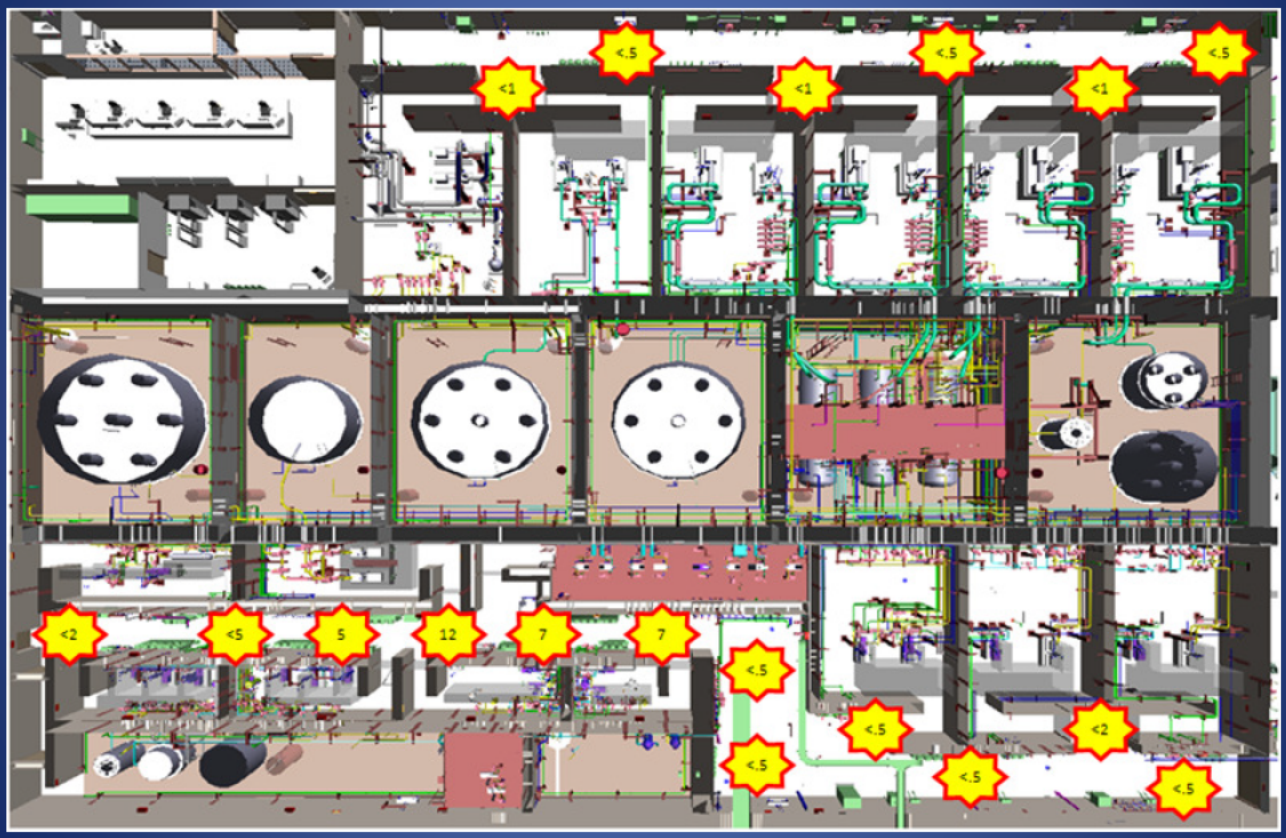

SWPGGS01.TP0101

Projected Dose Rates (in mrem/hr) CPA 116' – 0"

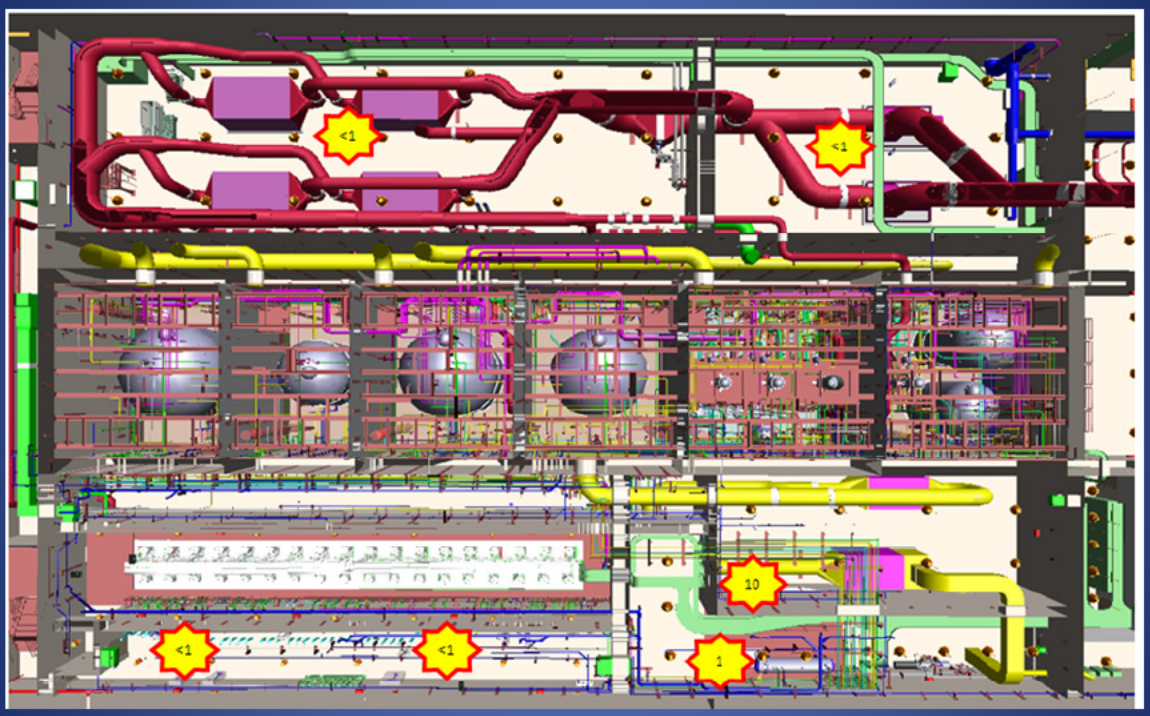

SWPGGS01.TP0101

Projected Dose Rates (in mrem/hr) CPA 139' – 0"

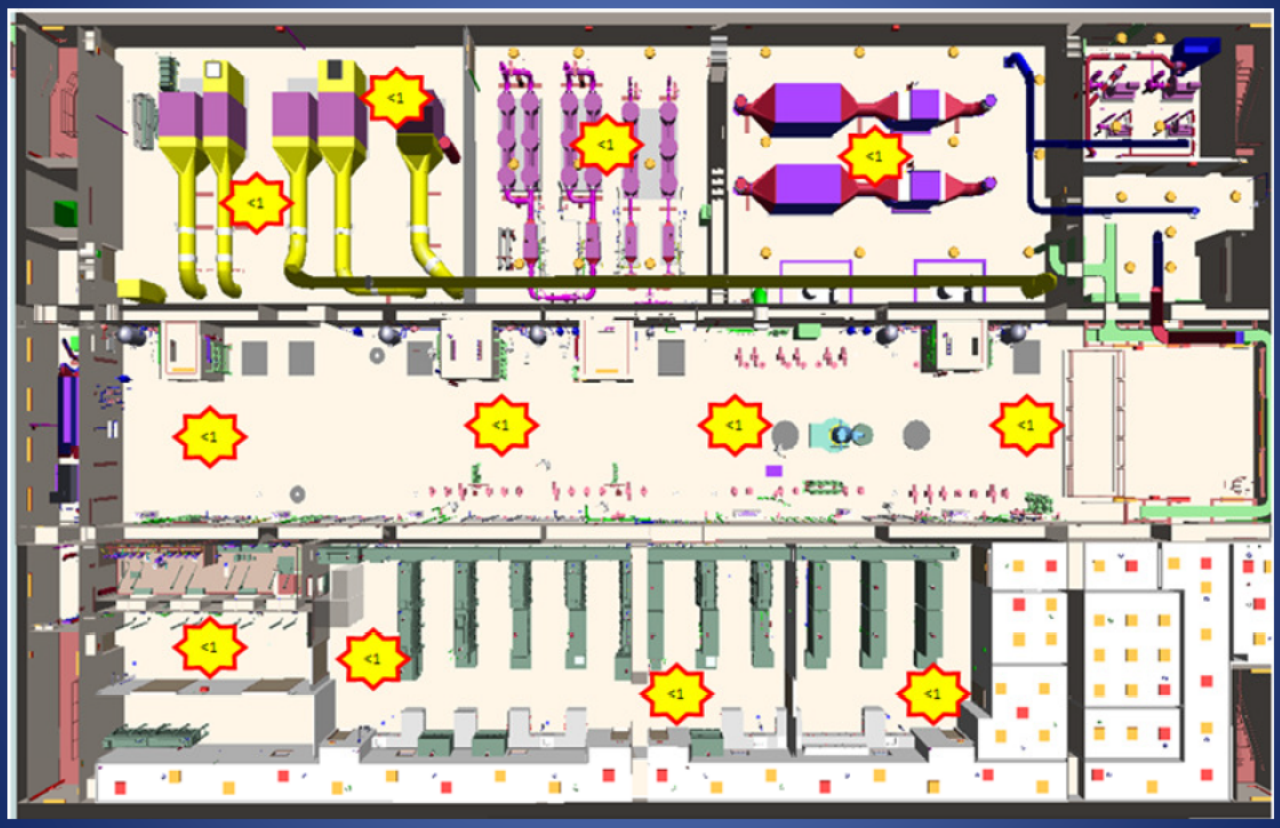

SWPGGS01.TP0101

Alpha Finishing Facility Projected Dose Rates (in mrem/hr)

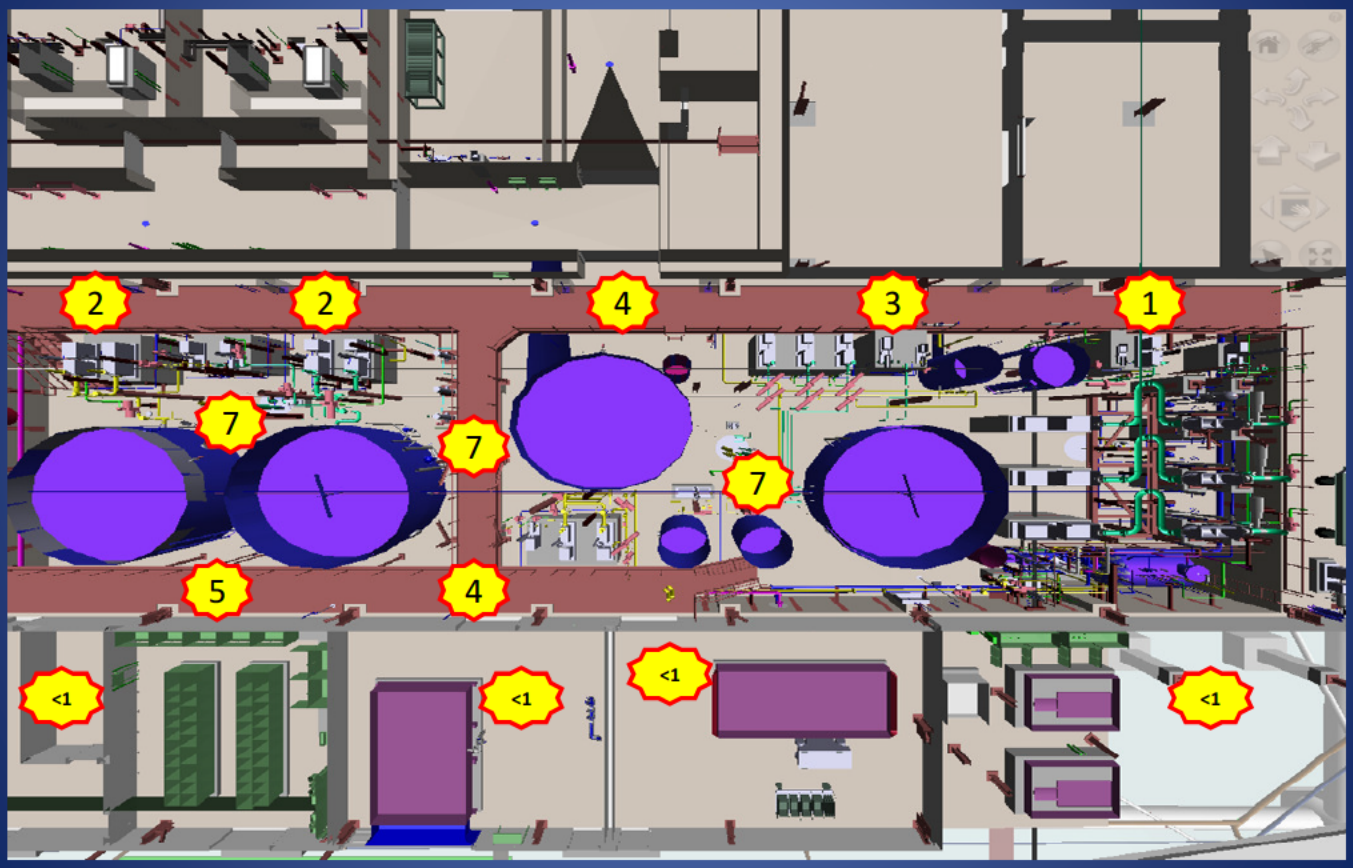

SWPGGS01.TP0101

Conclusion

1. We have described how an unstable atom reaches stability.
2. We have described the decay modes for:
   - Alphas
   - Betas
   - Gammas
   - Neutrons
3. We have defined units of measure for radiation/contamination.
4. We have discussed three ways to reduce internal and external exposures.