February 2018

KEYWORDS:
Saltstone
Tank 50
Saltstone Disposal Unit
Criticality Safety

Retention:
Lifetime

Nuclear Criticality Safety Evaluation for Z-Area (U)

Author, AECOM N&E Technical Services	M. H. Barnett	2/22/18 Date
Technical Review, AECOM N&E Technical Services	H. C. Benhardt	2/22/18 Date
Manager, AECOM N&E Technical Services	C. D. Cope	02.22.18 Date
Manager, Nuclear Safety Engineering	J. M. Bricker	02.26.18 Date
Engineering Manager, DWPF/Saltstone Facility Engineering Manager	E. J. Freed	2-27-18 Date
Manager, DWPF/Saltstone Facility Project Manager	J. R. Cantrell	2/27/18 Date

Distribution:

J. R. Cantrell	704-S	J. W. Ray	704-27S
B. E. Long	704-S	M. M. Potvin	704-27S
C. D. Cope	766-H	C. H. Blanton, DOE	703-H
G. E. Dorfler	766-H	T. C. Temple, DOE	704-S
J. M. Bricker	766-H	E. J. Freed	704-S
K. M. Brotherton	704-27S	J. F. Iaukea	704-S
A. V. Staub	704-30S	SRS Document Control	

DISCLAIMER

This document was prepared by AECOM N&E Technical Services, LLC (N&E TS) under contract with Savannah River Remediation, LLC (SRR), subject to the warranty and other obligations of that contract and in furtherance of SRR's contract with the United States Department of Energy (DOE). N&E TS' findings represent its reasonable judgments within the time and budget context of its commission and utilizing the information available to it at the time. This document was prepared solely for the DOE for Contract DE-AC09-09SR22505.

Release to and Use by Third Parties. As it pertains to releases of this document to third parties, and the use of or reference to this document by such third parties in whole or in part, neither N&E TS, SRR, DOE, nor their respective officers, directors, employees, agents, consultants, or personal services contractors (i) make any warranty, expressed or implied, (ii) assume any legal liability or responsibility for the accuracy, completeness, or usefulness, of any information, apparatus, product or process disclosed herein or (iii) represent that use of the same will not infringe privately owned rights. Reference herein to any specific commercial product, process, or service by trademark, name, manufacture or otherwise, does not necessarily constitute or imply endorsement, recommendation, or favoring of the same by N&E TS, SRR, DOE, or their respective officers, directors, employees, agents, consultants or personal services contractors. The views and opinions of the authors expressed herein do not necessarily state or reflect those of the United States Government or any agency thereof.

REVISION HISTORY

Revision	Author	Reason(s) for Revision	Date
0	K. J. McCoid	This NCSE supersedes EPD-CTG-950073, Nuclear Criticality Safety Evaluation for Z-Area (U).	**9/2002**
1	J. T. Petty	Section 5.1.1. Revised to document the effects of Tank 50 solids on dissolved uranium, plutonium, and neptunium. All sections. Revised to recognize facility/process modifications.	**6/2003**
2	W. G. Rhoden	All sections. Revised to recognize a new waste stream and associated proposed changes to the facility's Waste Acceptance Criteria that results in an increase in the concentration of fissile material allowed into the facility.	**8/2004**
3	D. A. Eghbali	All sections. Revised to evaluate the proposed changes to the Saltstone production facility.	**7/2005**
4	L. M. Abney D. A. Eghbali	All sections. Revision bars were not used due to large number of editorials throughout the NCSE. Revised to document the effects of receiving a new waste stream from the Modular CSSX Unit. Revised Sections 1.1, 1.2, 2.1, 5.1 and 9.0. Added Scenarios 5.1.11 and 5.1.12 to evaluate the effect of the new stream. Scenario 5.1.13 was added to evaluate the impact of adding TBP (anti-foaming agent) to SFT.	**4/2007**
5	B. L. Meriwether D. A. Eghbali	Low concentration sodium hydroxide solution is stored in the CCBT and used as inhibited flush water to the mixer during Saltstone Facility start-up and shut-down. Revision 5 evaluates the impact of this modification in Scenario 5.1.8. Figure 1 was revised to show piping modifications. Fixed editorials throughout the NCSE.	**9/2007**
6	D. A. Eghbali	Anti-foaming Dow Corning Q2 admixture replaces TBP. Daratard 17 admixture is added to delay concrete setting time inside piping and equipment. Both Q2 and Daratard 17 are pumped into the suction side of the SFT transfer pump.	**10/2008**
7	N. P. Devine R. L. Reed	Addresses the transition from salt solution flow to inhibited water flow at shutdown and/or setback due to low salt solution flow and the effect of possible introduction of salt solution into the CCBT.	**11/2009**
8	N. P. Devine M. H. Barnett	Incorporation of SDU 2 type cell design description. Minor editorial changes and updates, specifically vaults are now termed SDUs.	**10/2010**

Revision	Author	Reason(s) for Revision	Date
9	M. H. Barnett	Remove volume of SHOC and grout hopper. Other minor editorial corrections.	**6/2011**
10	M. H. Barnett	Update the NCSE to allow different SDU sizes and dimensions.	**6/2012**
11	R. L. Reed	Update the NCSE for consistency with the ARP/MCU NCSE related to characteristics of MCU salt solution sent to Saltstone. The ARP/MCU NCSE allows the use of Next Generation Solvent (NGS) (MaxCalix-based) and the BOBCalixC6-based solvent in any combination in MCU. Minor editorial changes and updates to indicate anti-foam material name is either Q2 or ACP (name change by manufacturer).	**3/2013**
12	M. H. Barnett	Incorporate the SSRTs into the NCSE	**5/2013**
13	M. H. Barnett	Incorporate SWPF into the NCSE and resolve comments in the Comment Resolution Database	**2/2018**

TABLE OF CONTENTS

1.0 INTRODUCTION 8
1.1 OBJECTIVE 8
1.2 SCOPE 8
1.3 DEFINITIONS 8
2.0 DESCRIPTION 9
2.1 PROCESS DESCRIPTION 9
2.2 SALT SOLUTION FEED DESCRIPTION 10
2.3 EQUIPMENT DESCRIPTION 11
2.3.1 Premix Blending and Conveying System 11
2.3.2 Continuous Grout Mixer and Grout Hopper 11
2.3.3 Saltstone Hopper Overflow Container 12
2.3.4 Salt Solution Receipt Tank 12
2.3.5 Salt Feed Tank 13
2.3.6 Clean Cap Batch Tank 13
2.3.7 Process Water Tank 14
2.3.8 Saltstone Transfer and Saltstone Disposal Unit Filling System 14
2.3.9 Pig Launching System 14
2.4 OPEN ITEMS 15
3.0 REQUIREMENTS DOCUMENTATION 16
4.0 METHODOLOGY 16
5.0 DISCUSSION OF CONTINGENCIES 17
5.1 SALTSTONE PRODUCTION FACILITY 17
5.1.1 Collection of Fissile Material in SSRT or the SFT Due to Intended Transfers from Tank 50 (SDI-5-005) 17
5.1.2 Fissile Material Concentration Exceeded in SSRT or SFT Due to Inadvertent Transfer from a High Level Waste Tank (SDI-5-001) 18
5.1.3 Fissile Material Precipitation in the SSRT or SFT (SDI-5-002) 18
5.1.4 Fissile Material Concentration in SSRT or SFT Due to Evaporation (SDI-5-003) 21
5.1.5 Long-Term Fissile Material Accumulation in SSRT or SFT (SDI-5-004) 22
5.1.6 Fissile Material Concentration/Accumulation in the Grout Mixer (SDI-5-006) 23
5.1.7 Fissile Material Accumulation in the Grout Hopper (SDI-5-007) 23
5.1.8 Fissile Material Precipitation in CCBT Due to an Inadvertent Transfer from SSRT or SFT (SDI-5-008) 24
5.1.9 Fissile Material Precipitation in Process Water Tank Due to an Inadvertent Transfer from SSRT or SFT (SDI-5-009) 25
5.1.10 Fissile Material Accumulation in Saltstone Hopper Overflow Container (SDI-5-010) 27
5.1.11 Fissile Material Concentration in the SSRT or SFT due to the Solvent from MCU/SWPF (SDI-5-011) 27
5.1.12 Fissile Material Precipitation in SSRT or SFT Due to Inadvertent Transfer of Scrub or Strip Solution from MCU/SWPF (SDI-5-012) 28
5.1.13 Fissile Material Precipitation/Accumulation in SSRT or SFT and Grout Mixer due to Q2 (ACP) and Daratard 17 Additions (SDI-5-013) 30
5.1.14 Accumulation and Concentration of Fissile Material in the SSRT Containment Enclosure after a large leak (SDI-5-016) 31
5.1.15 Long Term Accumulation of Fissile Material in the SSRT Containment Enclosure due to a small leak (SDI-5-017) 31
5.1.16 Accumulation of Fissile Material in the CCBT or SFT room due to a leak (SDI-5-019, SDI-5-020). 32
5.1.17 Accumulation of Fissile Material in the 210-Z Process Room due to a leak (SDI-5-018) 32
5.1.18 Freezing of material in the SSRT or SFT (SDI-5-021) 33
5.1.19 Inadvertent transfer from SWPF (SDI-5-022) 33
5.2 SALTSTONE DISPOSAL FACILITY 34

5.2.1 Fissile Material Accumulation/Concentration in Saltstone Disposal Units (SDI-5-014) 34
5.2.2 Grout Hydration Reactions (SDI-5-015) 34
6.0 CALCULATIONS AND RESULTS 35
7.0 DESIGN FEATURES AND ADMINISTRATIVE LIMITS & REQUIREMENTS.....37
7.1 ASSUMPTIONS.....37
7.2 DESIGN FEATURES.....37
7.3 ADMINISTRATIVE LIMITS AND REQUIREMENTS 37
8.0 SUMMARY AND CONCLUSIONS 38
9.0 REFERENCES 39
APPENDIX A: MAXIMUM ^{235}U EQUIVALENT CONCENTRATION IN GROUT 42
APPENDIX B: TECHNICAL REVIEW CHECKLIST 46
APPENDIX C: HAZARD EVALUATION TABLES 51

LIST OF ACRONYMS

CCBT	Clean Cap Batch Tank
CSSX	Caustic-Side Solvent Extraction
DSA	Documented Safety Analysis
DSS	Decontaminated Salt Solution
DSSHT	Decontaminated Salt Solution Hold Tank
ETP	Effluent Treatment Project
FGE	Fissile Gram Equivalent
HLW	High Level Waste
LLW	Low Level Waste
LRS	Leachate Return System
MCU	Modular Caustic-Side Solvent Extraction Unit
NCSE	Nuclear Criticality Safety Evaluation
NGS	Next Generation Solvent
NIM	Nuclear Incident Monitor
PVVS	Process Vessel Vent System
SDF	Saltstone Disposal Facility
SDU	Saltstone Disposal Unit
SFT	Salt Feed Tank
SHOC	Saltstone Hopper Overflow Container
SPF	Saltstone Production Facility
SRNL	Savannah River National Laboratory
SSRT	Salt Solution Receipt Tank
SWPF	Salt Waste Processing Facility
TBP	Tri-n-butyl phosphate
WAC	Waste Acceptance Criteria

1.0 INTRODUCTION

1.1 OBJECTIVE

This Nuclear Criticality Safety Evaluation (NCSE) is to evaluate the credibility of a criticality for normal conditions and all credible abnormal scenarios involving transfer and processing of waste salt solution (including concentration/precipitation/accumulation mechanisms) throughout the Saltstone Facility (Z-Area). Tank 50 receives waste salt solution from the Tank Farms and from the H-Canyon Evaporator Bottoms, the decontaminated salt solution (DSS) stream from the Modular Caustic-Side Solvent Extraction (CSSX) Unit (MCU) or the Salt Waste Processing Facility (SWPF), and process waste water from the Effluent Treatment Project (ETP). This waste is then transferred to and processed in Z-Area to produce a saltstone grout that is subsequently placed into Saltstone Disposal Units (SDU), also located in Z-Area, for final disposal as low level waste (Ref. 2).

1.2 SCOPE

The scope of this NCSE includes the Saltstone Production Facility (SPF) and the Saltstone Disposal Facility (SDF).

The scope of this NCSE is limited to the concentrations of fissile materials in the salt solution that result in fissile activity limits less than or equal to those specified in Reference 2 (see Table 1) as Documented Safety Analysis (DSA) limits for receipt of waste salt solutions in the SPF. Processing of salt solutions with fissile material activities in excess of those specified in the DSA requires further evaluation and is outside the scope of this NCSE.

Revision 13 analyzes events involving SWPF. SWPF was originally analyzed in a preliminary NCSE (N-NCS-Z-00002). Revision 13 incorporates SWPF into this baseline Saltstone NCSE and covers both MCU and SWPF operations. In addition, comments from the Comment Resolution Database were incorporated.

1.3 DEFINITIONS

Administrative Control - A control that relies on the actions, judgment, and responsibility of people for their implementation. Because administrative controls are human-based, and therefore subject to error in application, they are less desirable than engineered controls. These controls are sometimes accompanied or enhanced by equipment items that alert an operator to take action (Ref. 8).

Active Engineered Control - An engineered device that senses a given parameter and acts (e.g., close valve, open valve, stop flow) for the purpose of maintaining criticality safety. Generally, an active engineered control is not as effective as a passive engineered control (Ref. 8).

Barrier - One, or more, or a combination of: passive or active engineered criticality controls, administrative criticality control(s), criticality safety defense-in-depth feature(s), assumption(s), or nature of the process considerations that prevent exceeding a CSL. Engineered and/or administrative criticality controls are used to demonstrate compliance with the Double

Contingency Principle, or to demonstrate (alone or in combination with nature of process considerations) that a scenario is BEU (Ref. 8).

Credible - The attribute of being believable based on commonly acceptable engineering judgment. Due to the general lack of statistically reliable data, assigning numerical probabilities to events is not usually justifiable and when used should be backed up with references. Assigning a numerical probability that defines credible is not required in an NCSE (Ref. 8).

Fissile Gram Equivalent (FGE) - Mass of fissile material expressed as equivalents of one nuclide (e.g., ^{235}U in this case) when a mixture actually contains several fissile/fissionable nuclides such as ^{235}U, ^{238}Pu, ^{239}Pu and ^{241}Pu. Equivalencies in terms of $^{235}U(eq)$ in this NCSE are based on References 4 and 5.

Incredible - The attribute of NOT being believable on the basis of commonly acceptable engineering judgment. Due to the general lack of statistically reliable data, assigning numerical probabilities to events is not usually justifiable and when used should be backed up with references. Assigning a numerical probability that defines incredible is not required in an NCSE (Ref. 8).

Passive Engineered Control - Passive devices or features such as fixed geometry, fixed spacing, fixed size, that serve to maintain criticality safety (Ref. 8).

Waste Acceptance Criteria (WAC) - Formal waste characterization criteria (e.g., limits on fissile isotope concentration) that must be met by a facility before the waste can be accepted by other facilities.

2.0 DESCRIPTION

The information provided in this section is intended only as descriptive information and is not intended to specify controls and limits for the Saltstone Facility. It should be noted that only materials, equipment, and processes important to Nuclear Criticality Safety (NCS) are briefly described herein. Detailed description of the entire materials, equipment, and processes are provided in Chapter 2 of Reference 2 and Reference 7.

2.1 PROCESS DESCRIPTION

Tank 50 (located in H Area) receives waste salt solution and solutions containing sludge from the Tank Farms and H Canyon, process waste water from ETP and decontaminated salt solution (DSS) from either the MCU or SWPF (Figure 1). The DSS contains actinides, a trace amount of cesium, and a small concentration of the solvent used for extracting cesium. This resulting salt solution is stored until it can be transferred to Z-Area for processing and disposal as saltstone (Ref. 2).

In the SPF, the salt solution is received in a SSRT (with a maximum capacity of 65,500 gallons, Ref. 1) or the SFT and then fed to the grout continuous mixer. The anti-foaming admixture and the set retardant admixture are introduced to the continuous grout mixer along with the salt solution (Ref. 33). The anti-foaming admixture (Q2 or ACP) is an active silicone antifoam

compound that is easily dispersed in water and organic solvents (Ref. 34, 41). The set retardant admixture Daratard 17 is a mixture of corn syrup, water and calcium lignosulfonate with a pH range of 5-8 and is added to the salt solution to delay concrete setting time inside piping and equipment (Ref. 35).

There are no chemical mechanisms in Z-Area that can acidify the waste salt solution in a SSRT (Ref. 2). That is, no acidic solutions are available to be mixed with the SSRT contents to result in a potential for fissile material precipitation.

In the grout mixer the salt solution is mixed with dry materials (slag, flyash and cement) and the resulting grout is fed to the grout hopper. The grout pump is then used to pump the grout from the grout hopper into an SDU cell (e.g., SDU 2 and 4).

At the start-up and shut-down of each production cycle, inhibited (0.02 M sodium hydroxide solution) flush water from the CCBT will be provided to the grout mixer. That is, at the start-up of a production cycle, the treatment phase (addition of dry feeds to the mixer) is performed using inhibited water before salt solution (waste) is introduced into the mixer. Upon facility shutdown, the flow of salt solution to the mixer, along with the flow of dry feeds to the mixer, is stopped. During facility shutdown and system setbacks, the flow of salt solution is replaced by the flow of inhibited water to the mixer. All pre-start checks, initial facility startups, recovery from system setbacks, and all shutdown flushes will be performed using inhibited water.

A check valve, an isolation valve and the higher pressure (> 10 psig) in the CCBT transfer line upstream of the isolation valve, compared to ~ 2 psig in the salt solution transfer line at the junction with the line from the CCBT (Ref. 36), help preclude transfer of salt solution from a SSRT to the CCBT. If the CCBT transfer pump fails to maintain the high pressure in the CCBT transfer line, the line from the CCBT is automatically isolated (a valve will close automatically to isolate the CCBT) and the Process Water system is automatically aligned (a valve will open automatically) to supply this backpressure.

The design production rate of saltstone grout is ~180 gallons per minute (gpm), with a nominal production rate of ~150-160 gpm (Ref. 2) and salt solution must be fed to the process at approximately 115 gallons per minute to achieve the design production rate. Upon pumping saltstone grout to an SDU, the grout flows into an SDU cell in a self-leveling manner. The grout quickly gels and sets into a stable solid slab. Fissile materials are thus contained in a solid matrix that is resistant to leaching after the saltstone grout sets. The nominal volume of saltstone grout in an SDU cell that has not gelled or set is limited to the volume produced during a production cycle.

2.2 SALT SOLUTION FEED DESCRIPTION

The SPF is used to treat and safely dispose of aqueous, low-activity waste generated from the Tank Farms, the H-Canyon Evaporator Bottoms, the DSS stream from the MCU/SWPF, and process waste water from the ETP. The waste streams are stored in Tank 50 until they are pumped to the Saltstone Facility for treatment and disposal. Waste from other sources may also

be transferred to Tank 50 for processing as long as the waste transferred to the Saltstone Facility meets the requirements of the Saltstone Waste Acceptance Criteria (WAC).

The Saltstone WAC Program ensures that the composition of the waste stream (i.e., salt solution) received into the facility is within the DSA limits. Table 1 summarizes fissile material activity limits for MCU operation from the DSA (Ref. 2). The limits for MCU bound the limits for SWPF (Ref. 52) and will be used throughout this document. Appendix A derives the corresponding concentration limits.

Table 1. Saltstone DSA Fissile Material Activity Limits
(Taken from Reference 2)

U-233	≤ 1.25E+04 pCi/mL
U-235	≤ 1.25E+02 pCi/mL
Pu-239	≤ 2.66E+05 pCi/mL
Pu-241	≤ 9.31E+05 pCi/mL

2.3 EQUIPMENT DESCRIPTION

2.3.1 Premix Blending and Conveying System

Dry bulk materials for the saltstone process, consisting of cement, slag, and flyash, are supplied to four storage silos from which the dry material are gravity-fed into the weigh hopper. The weigh hopper is provided to enable weighing of dry materials to prepare batches of premix, which is the blended product of the three dry materials.

2.3.2 Continuous Grout Mixer and Grout Hopper

The saltstone continuous grout mixer (with a design output rate of ~180 gallons per minute) and the grout hopper are located within the Process Building (210-Z). The premix is gravity fed from the loss-in-weight feeder located on top of the Process Building. Salt solution is fed from a SSRT or the SFT into the mixer at a flow rate based on the premix feed rate.

The grout mixer has a nominal internal volume of less than 100 gallons and is designed so that all parts that come into contact with the saltstone grout can be flushed with inhibited or process water. The dry premix enters the top of the mixer through a chute and mixed grout discharges out of the bottom of the mixer through a 10-inch line into the grout hopper.

The grout hopper is a container located below the mixer and has a nominal capacity of a few hundred gallons. The hopper is shaped to minimize grout pluggage. The hopper also contains an agitator to help prevent grout from settling in the hopper. The grout hopper provides a “wide spot” or surge volume to ensure steady flow from the grout pump to the SDU. Spray nozzles are provided inside the hopper for flushing purposes. The hopper is equipped with level monitoring

instrumentation. At the end of each process cycle, inhibited or process water is used for flushing the grout mixer and hopper.

The grout mixer is occasionally plugged. Under this condition the pressure in the salt solution line at the interface with the line from the CCBT could increase. If this were to happen, valves would prevent backflow of salt solution to the CCBT.

In addition to the check valve and isolation valve, an indication of low total flow to the mixer and actuation of redundant feed chute high level conductivity probes will occur as the salt solution backs up in the premix feed chute. Receipt of any of these indications causes interlocks which stop the salt solution flow and prevent backflow to the CCBT (Ref. 32).

2.3.3 Saltstone Hopper Overflow Container

The Saltstone Hopper Overflow Container (SHOC) (the overflow dump container as indicated in Figure 1) is a container with an internal volume of several hundred gallons and is connected to the bottom of the grout hopper (Ref. 7, SF-I-GE-0006). The SHOC is configured such that it can be easily removed by the facility. The SHOC acts as a dump box for receiving leftover or overflow grout from the grout hopper. Prior to overflow, the SHOC will be removed and replaced with an empty container or emptied.

2.3.4 Salt Solution Receipt Tank

Two SSRTs add capacity to the SPF for receiving low activity salt solution. The low activity waste (DSS or LLW) is transferred to the SSRTs through the same jacketed inter-area transfer line that was used for the SFT. The low activity waste can come from MCU, SWPF, H-Canyon, or ETP through Tank 50 and into either SSRT #1 or SSRT #2. Each SSRT has an overflow volume of 65,500 gallons and a maximum vapor space volume of ~75,500 gallons. The tanks have an outer diameter of 26 ft and are 19 ft 6 in. high (Ref. 1). The bottom of the tank is sloped 3/8 in. per ft towards the tank outlet (Ref. 1). The nozzle is positioned such that it leaves a 0.2 gallon heel (Table 2). Spillage/leakage from a SSRT onto the sloped concrete floor is directed into a sump. A sump pump is provided for transferring liquid back into the SSRT.

The SSRT is equipped with an agitator that is operated as required to keep solids in suspension. Anti-foaming admixture Q2 (or ACP) and the Daratard 17 set retardant admixture are supplied to the discharge side of the SSRT transfer pump. Salt solution is pumped from the SSRT to the grout mixer using the SSRT Transfer Pump. The pressure in the salt solution transfer line at the junction with the line from the CCBT is ~ 2 psig (Ref. 36). The tanks are vented to an independent PVVS with HEPA filtration.

The SSRTs are recirculated such that the recirculation path provides a means to recirculate the salt solution without going through the SFT. In addition, a 4-way valve allows material to be recirculated back to the SSRT from the mixer.

The SSRTs and associated equipment (pumps, valves, etc.) are located in a building adjacent to 210-Z. The building (dike) consists of three separate cells. Two cells contain one SSRT tank in

each cell that are level with grade and extend above grade (Ref. 25). The SSRT dike walls are constructed of concrete. Each SSRT cell is covered by a walking plate. Above the building, a rain cover protects the tanks and related equipment from inclement weather and minimizes infiltration of precipitation into the dikes. The third cell contains the pump gallery, located on the east end of the building, which is physically separated from the tanks by a concrete wall. A stairwell is provided to allow access to the walking platform above the SSRT for the purpose of sampling, radiation monitoring, maintenance, and inspection. A stairwell is also provided to allow access into the pump gallery to allow for pump and valve inspection and maintenance. Since the discharge pipe for the SSRT is connected at the bottom of the tank, only a minimum amount of heel will remain in the tank. A pipe loop on the discharge piping is provided to prevent gravity draining of the SSRTs outside of the dike.

The SSRT Building is not connected to the PVVS for ventilation. Ventilation is achieved through diurnal breathing of the cells with the environment.

2.3.5 Salt Feed Tank

With the introduction of the SSRTs, the SFT no longer serves as the primary feed tank to the mixer and instead is used as a backup feed tank and additional leachate/bleed water hold capacity for enhanced leachate/bleed water management. The SFT acts as a drain destination for the transfer line and has been replaced by the SSRTs as the primary feed tank to the mixer. The SFT is connected to the SSRTs to transfer drain and flush water to the SSRTs.

The SFT is a cylindrical tank with an overflow capacity of 6504 gallons. The SFT has an inner diameter of 12 feet, and a height of 8.5 feet (Ref. 7, SF-I-GE-0019). The tank bottom is sloped to form a low point on one side of the tank. Spillage/leakage from the SFT onto the sloped concrete floor is directed into a sump. A sump pump is provided for transferring liquid into the SFT.

2.3.6 Clean Cap Batch Tank

The CCBT is a cylindrical tank with a nominal operating capacity of 45,000 gallons and an overflow capacity of 50,392 gallons. The CCBT has a nominal inner diameter of 25 feet and a height of ~14 feet (Ref. 7, SF-I-GE-0004). The tank bottom is sloped to form a low point on one side of the tank (Ref. 2). A sump pump is provided for transferring sump liquid into the SFT (Ref. 33). The CCBT is used to provide inhibited flush water to the mixer during Saltstone Facility start-up and shut-down. During normal waste treatment operation, the pressure in the CCBT transfer line upstream of the isolation valve is higher (> 10 psig) than the pressure of ~2 psig in the salt solution transfer line at the junction with the line from the CCBT. This difference in pressure would preclude transfer of salt solution from the SSRT to the CCBT in the event the check valve and isolation valve failed. If the CCBT transfer pump fails to maintain the high pressure in the CCBT transfer line, the line from the CCBT is automatically isolated and the Process Water system is automatically aligned to supply this backpressure.

2.3.7 Process Water Tank

Process water is supplied to Z-Area from the site-wide domestic water system. The process water system, consisting of an outdoor tank (not shown in Figure 1) and a process water pump, supplies process water to the SSRT or the SFT, the High Pressure Flush Pump, the Saltstone Mixer area, and hose stations in the CCBT dike area, dry materials unloading, and blending areas.

The Process Water Tank is a cylindrical tank with a maximum capacity of 39,401 gallons. The Process Water Tank has a nominal inner diameter of 21 feet and a nominal height of 16 feet (Ref. 7, SF-I-GE-0018).

2.3.8 Saltstone Transfer and Saltstone Disposal Unit Filling System

Saltstone grout is pumped from the Process Building to an SDU through the grout transfer line using the grout pump. The length of the grout transfer line can vary, depending on the location of the SDU.

SDUs are concrete cells that can vary in size and shape and contain millions of gallons of salt solution grout. SDUs are designed to receive liquid grout, contain the grout until it sets, and be the final disposal location for the hardened saltstone grout.

SDUs may have a Leachate or Drainwater Collection and Return system to collect drainage of any excess leachate or drainwater present in the cell, and pump it back to the SPF (Ref. 2).

2.3.9 Pig Launching System

The pig launching system is used to clean the grout transfer line at the end of a normal production cycle or in case of an abnormal system shutdown. A pig is a rubber ball that is propelled through the transfer line by compressed air. The pig pushes the grout out of the pipeline, wipes the pipe walls, and drops into the SDU.

There are two pig launchers: a primary launcher and a backup launcher. They are located downstream of the grout pump. The backup launcher is used if the primary launcher fails or during recovery from equipment failures when the grout transfer line is required to be cleaned more than one time. Compressed air for propelling the pig is provided by the pig launching air system.

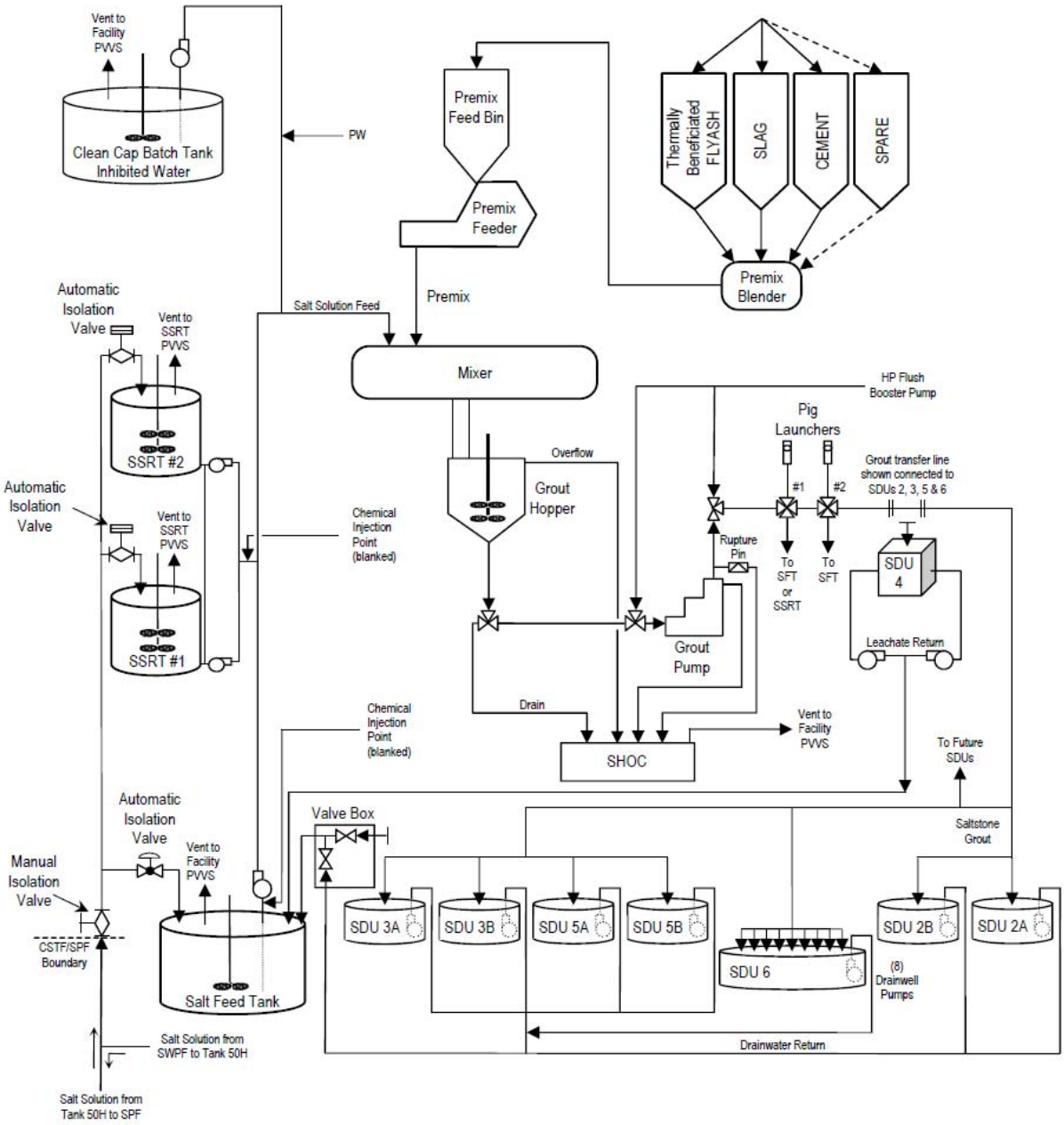

Figure 1 Simplified Process Diagram

2.4 OPEN ITEMS

The SWPF portion of this NCSE is taken from the preliminary NCSE N-NCS-Z-00002. There were two open items in that NCSE concerning SWPF:

1. The SDI modifications are not final. During the preliminary CHAP, it was stated the plan is to have the same connections for the SSRT as currently for the SFT. Therefore, many of the references point to descriptions for the SFT and they are assumed for the SSRT.

The SSRT connection design is now complete and the SSRTs were incorporated into Revision 12 of this NCSE.

2. The SWPF does not have a confirmed NCSE for the DSS Hold Tank. This NCSE has a scenario for inadvertent transfers from SWPF but defers to the SWPF NCSE for the criticality safety basis.

SWPF now has a confirmed NCSE (Reference 20) which covers the DSS Hold Tank and is referenced by this NCSE.

There are no open items in this NCSE.

3.0 REQUIREMENTS DOCUMENTATION

This NCSE is subject to the general requirements documentation and review process that are applicable to all nuclear criticality safety evaluations performed at SRS, as outlined in References 8 and 37.

4.0 METHODOLOGY

This NCSE utilizes the ANSI/ANS-8.1 (Ref. 4) single-parameter subcritical limits on concentration (11.6 g ^{235}U/liter), areal density (0.4 g ^{235}U/cm^2 or 371 g ^{235}U/ft^2), slab thickness (4.4 cm), and mass (700 g ^{235}U) for UO_2F_2 solutions to demonstrate the safety of fissile material concentrations in salt solution during normal and all credible abnormal scenarios involving the transfer and processing of salt solution throughout Z Area.

Single-parameter subcritical limits for ^{235}U in aqueous solutions are applicable to uranium compounds mixed homogeneously with water. Footnote 5 in ANSI/ANS-8.1 indicates that homogeneous mixtures in solution experiments that are the basis of the limits had particle sizes of less than 60 μm. Analysis has shown that >90% of salt particles are smaller than 60 μm (Ref. 9); therefore, the ANSI/ANS-8.1 single-parameter subcritical limits for ^{235}U in aqueous solutions are applicable to salt solutions.

Dry grout is not considered as effective a moderator as an aqueous solution because grout contains elements that supplant the hydrogenous material of an aqueous solution by materials with better neutron absorbing capabilities, such as iron, sodium, sulfur, potassium, and calcium. Thus, the use of the aqueous UO_2F_2 subcritical limits is therefore reasonable and conservative.

References 4 and 5 provide equivalency factors to combine fissile isotopes into a single ^{235}U(eq) value:

$$^{235}U(eq) = {}^{235}U + 1.4 * {}^{233}U + 2.25 * ({}^{239}Pu + {}^{241}Pu)$$

where each isotope is in the same mass-based unit (e.g., mg/L).

As discussed in References 3 and 8, a multi-discipline team (Criticality Safety Team) performed the scenario identification and incredibility determinations. This was done using the Consolidated Hazards Analysis Process (CHAP) (Ref. 51). Hazard Evaluation Tables were developed by the team and the final HE Tables can be viewed in Appendix B. For Revision 13, a CHA team was not reconvened. The Saltstone process has not changed and SWPF events are taken from N-NCS-Z-00002 which held a CHAP and have not been impacted by final design.

5.0 DISCUSSION OF CONTINGENCIES

The objective of this section is to document the Contingency Analysis (CA) performed for processing and disposal of waste salt solution in the Saltstone Facility. The CA methodology from Reference 3 was used to determine whether barriers are required for demonstrating that a criticality accident is the Saltstone Facility is not credible.

Z-Area consists of two segments: (1) the SPF, which receives waste salt solutions in the SSRTs and produces saltstone grout, and (2) the SDF, which consists of SDUs for the disposal of the grout. Possible scenarios within the Saltstone Facility are evaluated to establish if a mechanism for accumulating and/or concentrating fissile materials is possible. Fissile material concentration and accumulation are compared to the single-parameter limits established in ANSI/ANS-8.1 (Ref. 4). Each scenario title includes an identification (SDI-5-0xx) corresponding to the CHAP event as given in Appendix B.

Scenarios 5.1.1, 5.1.6, 5.1.7, 5.1.10, 5.2.1, and 5.2.2 represent normal operations.

5.1 SALTSTONE PRODUCTION FACILITY

Postulated contingencies in the SPF involve multiple scenarios associated with transfers to a SSRT or the SFT from Tank 50, inadvertent transfers to the SFT, inadvertent transfers of solvent and/or acid from MCU/SWPF to a SSRT or the SFT via Tank 50, inadvertent transfer from SWPF directly to the SSRT, failure of the grout mixer operations during transfer of salt solution from a SSRT or the SFT to the mixer, presence of grout in the SSRT or the SFT, and the inadvertent transfer of salt solution from a SSRT or the SFT to the Process Water Tank and the CCBT. The transfer scenarios are evaluated for concentration/precipitation mechanisms; specifically, precipitation due to pH change, temperature change, and evaporation are evaluated.

5.1.1 Collection of Fissile Material in SSRT or the SFT Due to Intended Transfers from Tank 50 (SDI-5-005)

Intended transfers of waste salt solution from Tank 50 to a SSRT or the SFT require characterization of the salt solution and demonstrated compliance with the Saltstone WAC prior to transfer to Z-Area. This ensures that the concentrations of fissile isotopes in the salt solution are within the WAC limits documented in Reference 18. The WAC concentration limits are slightly less than the DSA concentration limits to ensure the DSA values are not exceeded. Therefore, it is conservative to use the DSA concentration limits (see Table A-1) as this maximizes the fissile material and concentration in Saltstone. When converted to equivalent fissile quantities (see Table A-3 of Appendix A), the proposed activity limits result in ~69.3 mg ^{235}U(eq) per liter of salt solution. This concentration limit is much less than the single-parameter

subcritical concentration limit of 11.6 g ^{235}U/L established in Reference 4. Any insoluble fissile solids would be accompanied by associated poisons.

In addition to salt solution, Tank 50 contains solids which could potentially be sent to a SSRT or the SFT. Therefore, a SSRT or the SFT may contain Tank 50 solids in unspecified quantities. A SRNL study (Ref. 16) demonstrates Tank 50 solids do not have an affinity for uranium. Maximum loading capacities for plutonium and neptunium were 2.01 and 4.48 μg per gram of Tank 50 solids, respectively. Reference 17 demonstrated that uranium-saturated solids are safely subcritical. Reference 17 also demonstrated that the neptunium and plutonium interactions, documented in the Reference 16 study, will not lead to a critical configuration in the Tank 50 solids. There are no physical or chemical mechanisms that can change properties of material transferred from Tank 50 to a SSRT or the SFT. Therefore, Tank 50 solids in a SSRT or the SFT are not a credible criticality concern.

Based on the above, intended transfers to the SSRT or the SFT from Tank 50 do not pose a credible criticality concern for the SSRT.

5.1.2 Fissile Material Concentration Exceeded in SSRT or SFT Due to Inadvertent Transfer from a High Level Waste Tank (SDI-5-001)

Tank 50 receives waste salt solution from HLW Tank Farms through the Tank 50 valve box (Ref. 10). This waste salt solution contains waste tank supernate and small quantities of sludge solids and has been evaluated and demonstrated to remain subcritical in the originator facility due to the very low solubility of fissile material in the alkaline solutions and the small amount of insoluble fissile solids in the sludge (Refs. 11, 12). The alkaline solution (pH > 7) limits the solubility of fissile materials to 28.78 mg ^{235}U(eq)/L (Appendix A), much less than the single parameter subcritical concentration limit of 11.6 g ^{235}U/L (Ref. 4). Because storage of HLW solutions in carbon-steel tanks requires that the solution be alkaline, the pH of the waste salt solution is therefore not regarded as a criticality control.

Should the inadvertent transfer contain significant amounts of sludge solids from a HLW tank, the neutron absorbing materials (iron, manganese, etc.) present in the sludge solids keep the sludge subcritical under all credible abnormal conditions (e.g., precipitation, accumulation) (Ref. 13).

Thus, a direct transfer of waste salt solution from a HLW tank to a SSRT or the SFT through the Tank 50 valve box (e.g., a concurrent transfer to a SSRT or the SFT from Tank 50 while transferring from the HLW tank to Tank 50) is not a credible criticality concern. A direct transfer from SWPF is covered in Scenario 5.1.19.

5.1.3 Fissile Material Precipitation in the SSRT or SFT (SDI-5-002)

This scenario postulates precipitation of fissile material in the SSRT and evaluates potential mechanisms for precipitating or concentrating fissile materials in the SSRT.

Mechanisms for precipitation of solutions evaluated in this NCSE are temperature changes, dilution of salt solution, pH changes, the grout components' affinity for fissile material, and the affinity of Tank 50 solids for fissile material.

Temperature Changes

A correlation of uranium solubility measurements performed by Hobbs and Edwards and a solubility model calculated by the Geochemist's Workbench software both predict that the solubility of uranium in the salt solution increases as the temperature decreases (Refs. 11, 12). The correlation by Hobbs and Edwards is applicable for a temperature range from 27 °C to 85 °C while the software model is applicable for a temperature range of 0 °C to 85 °C. Reference 43 examined the thermal response in a SSRT. It demonstrated that the tanks operate within the analyzed range (e.g., 0 °C to 85 °C). Even an extreme case (maximum agitator efficiency and minimum working volume for several days) the temperature was less than 85 °C after 5 days, though it did exceed 85 °C after much longer periods. Any slight temperature differences would not impact the applicability of the uranium solubility measurements to a SSRT or the SFT.

According to References 11 and 12, as the salt solution temperature increases, the solubility of uranium decreases, resulting in a potential for precipitation/and or accumulation of uranium in a SSRT or the SFT. On the other hand, as the salt solution temperature decreases, the solubility of uranium increases, resulting in a potential for increased uranium concentration in a SSRT or the SFT. However, based on Reference 11 conclusions, such increased/decreased uranium solubilities in salt solutions in the SSRT or the SFT are not significant enough to cause a criticality concern. Reference 12 indicates plutonium solubility is not dependent on temperature.

Dilution of Salt Solution in SSRT or SFT

As discussed in Section 2.2, a SSRT or the SFT receives low-activity waste salt solution from Tank 50. A SSRT also receives the drainage from the PVVS, the LRS, the Process Building drains, the SFT, and the Operations Building drains, including lab hoods, sinks, and decontamination showers. Thus, the fissile material concentration in a SSRT or the SFT is a function of the amounts and concentrations of streams feeding a SSRT or the SFT. Based on Reference 11 conclusions, dilution of material in a SSRT or the SFT material will not cause precipitation of uranium and therefore is not a criticality concern. This is in part due to the low concentration of fissile solids in the salt solutions and presence of neutron absorbing elements such as iron and manganese in the small amount of sludge entrained in salt solution.

Salt Solution Chemistry Changes

The basis for current criticality safety within the Tank Farms is the low solubility of fissile material in alkaline solutions (Ref. 14). Because storage of HLW solutions in carbon-steel tanks requires that the solution be alkaline, the pH of waste solution is not regarded as a criticality control. There are no chemical mechanisms in Z-Area that can acidify the waste salt solution in a SSRT or the SFT (Ref. 2). That is, no acidic solutions are available to be mixed with the contents of a SSRT or the SFT contents to result in a potential for fissile material precipitation. The impact of admixtures (e.g., set retardants, anti-foams, plasticizers) addition is evaluated in Scenario 5.1.13. The impact of acid from MCU/SWPF is evaluated in Scenario 5.1.12. It is not credible for acid from H-Canyon to reach a SSRT or the SFT as the Tank Farm WAC prevents acidic transfers from H-Canyon.

Presence of Grout in SSRT or SFT

A SSRT or the SFT may contain components of the grout (i.e., slag, cement, and flyash) in unspecified quantities. This is due to the backflow of grout during flushing of the process pipe that transfers grout from the grout hopper to an SDU or from the leachate system as it is being pumped from the vault (leachate is sent to the SFT which can be transferred to the SSRT).

A Savannah River National Laboratory (SRNL) study (Ref. 15) demonstrates that the components of grout do not absorb significant amounts of fissile material. Fissile material present in the grout components is possible based upon calculated maximum equilibrium constants (K_d) for uranium and plutonium (Ref. 15). Based upon these constants, the maximum fissile material concentration in a solution composed of grout and waste salt solution, in terms of ^{235}U (eq), was determined to be 0.336 g/ L grout (See Appendix A). The 0.336 g ^{235}U (eq)/L grout bounds the maximum possible fissile concentration in any grout in a SSRT or the SFT. It should be noted that the 0.336 g ^{235}U (eq)/L grout is less than 1/20 of the single-parameter subcritical concentration limit of 11.6 g U^{235}/L for aqueous uranyl nitrate solutions established in Reference 4.

There are no known mechanisms in a SSRT or the SFT for transfer of the insoluble fissile solids in the sludge directly into the grout components. If the fissile material concentration in the salt solution is less than its solubility limit, some of the insoluble fissile solids could be dissolved. Through the equilibrium mechanism described above, the fissile material could then enter the grout components. However, this equilibrium mechanism is governed by the fissile material solubility limit in the salt solution and the concentration of fissile material in the grout.

Dry grout is not considered as effective a moderator as an aqueous solution because grout contains elements that supplant the hydrogenous material of an aqueous solution by materials with better neutron absorbing capabilities, such as iron, sodium, sulfur, potassium, and calcium.

Therefore, the presence of grout components in a SSRT or the SFT is not a credible criticality concern, and the presence of fissile bearing sludge solids in a SSRT or the SFT would not affect the concentration of fissile materials in the grout significantly enough to be a criticality concern.

The Saltstone DSA allows a maximum fissile concentration of 69.3 mg ^{235}U(eq)/L (See Appendix A). Assuming the overflow volume of a SSRT is full of fissile material at the DSA limit, the SSRT could hold 17.181 kg ^{235}U(eq) [See Section 6]. The subcritical areal density limit for ^{235}U(eq) is 0.4 g/cm^2. Therefore, the fissile material would have to accumulate in an area less than 42,952 cm^2 (6,657 in^2). The bottom of the tank is slightly sloped (~ 2 degrees) towards the discharge nozzle. Therefore, any precipitated fissile solids may migrate towards the nozzle and can potentially accumulate in an area less than 6,657 in^2. Section 6 shows that the region of the floor around the discharge nozzle at a height of 1.39 inches (3.53 cm) or above the base of the nozzle exceeds an area of 6,657 in^2. Figure 2.4 of Reference 44 gives the subcritical infinite slab thickness for uranium metal – water mixtures at various concentrations. The fissile material has to exceed a concentration of 1.3 kg/L to have a subcritical slab thickness limit of less than 3.53 cm. Reference 45 gives the density of salt as 1.6 g/cc. Assuming all the salt is $Na_2U_2O_7$ (Ref. 9), that would give a uranium density of 1.2 g U/cc, which is less than the

required density to exceed a subcritical slab thickness of 1.39 inches. This analysis conservatively assumes the uranium is 100 wt% enriched. Therefore, due to the geometry of the tank, both the subcritical areal density limit and subcritical slab thickness limit cannot be exceeded simultaneously.

This is a very conservative analysis. It assumes a SSRT is at overflow volume with solution that is at the DSA limit. In reality, the solubility limits in alkaline salt solution are significantly less than the Saltstone DSA or WAC limits (Ref. 12). Therefore, the fissile concentration in solution sent to a SSRT would not be at the DSA limits, but would be at or less than the maximum concentration corresponding to the solubility limits.

Considering, 1) the lack of a mechanism to appreciably precipitate fissile material, 2) the low solubility of fissile materials in salt solutions and corresponding limited mass of fissile material in a SSRT or the SFT, and 3) the large SSRT cross section area, criticality in a SSRT or the SFT, due to precipitation, is judged incredible.

5.1.4 Fissile Material Concentration in SSRT or SFT Due to Evaporation (SDI-5-003)

The SSRTs and the SFT are vented to a PVVS, which can potentially cause excessive evaporation of the waste salt solution, resulting in increased concentration of fissile material in a SSRT. The Saltstone DSA allows a concentration of 69.3 mg ^{235}U(eq)/L (See Appendix A). As shown in Reference 10, the maximum concentration in a waste tank inadvertent transfer is 20.28 mg ^{235}U(eq)/L (based on solubility and enrichment limits in the Tank Farm). Any insoluble fissile solids in an inadvertent transfer would be accompanied by associated poisons. Therefore, the concentration and mass from an inadvertent transfer is bounded by the Saltstone DSA limit.

The subcritical concentration limit is 11.6 g ^{235}U/L (Ref. 4). The salt solution in a SSRT or the SFT would have to concentrate by over a factor of 150 to exceed the subcritical concentration limit. A fire resulting in evaporating the material in a tank is not credible; therefore, it is not credible that the solution in the SSRT will concentrate by over a factor of 150.

Assuming the overflow volume of a SSRT is full of fissile material at the DSA limit, a SSRT could hold 17.181 kg ^{235}U(eq) [See Section 6]. The subcritical areal density limit for ^{235}U is 0.4 g/cm^2. Therefore, the fissile material would have to accumulate in an area less than 42,952 cm^2 (6,657 in^2). However, due to the large radius and slight slope of the tank, the solution cannot concentrate into an area less than 42,952 cm^2 and still exceed the subcritical slab height of 4.4 cm (Ref. 4).

According to Reference 12, the solubility of alkaline salt solutions is very low. Therefore, significant evaporation will not continue to concentrate the fissile material in solution. Instead, the fissile material will likely precipitate out. The criticality safety of precipitation is discussed in Scenario 5.1.3.

Considering, 1) the low solubility of fissile materials in salt solutions that is the basis for criticality safety of such solutions, 2) the neutron absorbing elements associated with the insoluble fissile solids in sludge, and 3) the large tank cross section area (nominal 26 feet in

diameter for SSRT and 12 feet in diameter for SFT), criticality in a SSRT or SFT, due to excessive evaporation of an inadvertent transfer from a HLW tank, is judged incredible.

5.1.5 Long-Term Fissile Material Accumulation in SSRT or SFT (SDI-5-004)

This scenario postulates long-term accumulation of fissile material in a SSRT or the SFT due to receiving and processing a large volume of salt solution.

Long-term accumulation of fissile solids at the bottom of a SSRT or the SFT is not a criticality concern because of the low concentration of fissile solids in the salt solutions and the presence of neutron absorbing elements such as iron and manganese in the small amount of sludge entrained in salt solution. In addition, a SSRT is periodically agitated and, without agitation, Reference 9 indicated a maximum settling rate for precipitated uranium is 3-4 ft/day and a minimum settling rate is 0.25-0.5 ft/day. Therefore, even if the tank is not agitated, it would take days before material would settle and potentially be left in the tank after a transfer. In addition, the discharge nozzle is located such that the bottom of the nozzle is 0.25 in. (0.635 cm) above the bottom of the tank floor. Due to the location of the discharge nozzle, material would have to completely settle to the bottom of the tank, with none in solution, to potentially not be transferred out. In addition, the material would have to preferentially collect away from the discharge nozzle to exceed a subcritical slab thickness of 4.4 cm (Ref. 4).

As there are no mechanisms to appreciably precipitate fissile material, a SSRT is typically agitated, and the discharge nozzle is essentially located at the level of the tank bottom, a criticality due to long term fissile material accumulation in a SSRT in judged incredible.

Long-term accumulation of fissile solids at the bottom of the SFT is not a criticality concern because of the low concentration of fissile solids in the salt solutions and the presence of neutron absorbing elements such as iron and manganese in the small amount of sludge entrained in salt solution.

To consider the possibility of soluble fissile material accumulating in the SFT, assume that all the soluble fissile material in a series of transfers (of salt solution at the DSA equivalent limit of 69.3 mg/L ^{235}U(eq) [see Table A-3]) remains in the SFT and settles to the bottom of the 12-ft diameter SFT. It would require the fissile material from more than 24 full SFT volumes (of volume equal to the SFT overflow volume of 6504 gallons) to precipitate out of solution and remain in the SFT to exceed the subcritical areal density limit of 0.4 g/cm^2 ^{235}U(eq) [371 g/ft^2 ^{235}U(eq)].

Area for tank with 12-ft diameter = π * (6 ft)^2 = 113.097 ft^2

^{235}U(eq) mass = 371 g/ft^2 ^{235}U(eq) * 113.097 ft^2 = 41959.1 g

At 69.3 mg/L, volume = 41959.1 g * 1000 mg/g / 69.3 mg/L * 1 gallon/3.785L = 159965 gallons

At 6504 gallons/transfer, 159965 gallons = 24.5 transfers

There are no mechanisms in the SFT to result in precipitation or preferential accumulation of fissile material. Accumulation in the SFT of the soluble fissile material from over 158,000 gallons (corresponding to over 24 full SFT volumes) is not credible. Therefore, long-term

accumulation of fissile material in the SFT due to receiving and processing a large volume of salt solution is not a credible criticality concern.

5.1.6 Fissile Material Concentration/Accumulation in the Grout Mixer (SDI-5-006)

This scenario postulates concentration/accumulation of fissile materials in the mixer during salt solution transfer from a SSRT or the SFT.

Salt solution is fed from a SSRT or the SFT into the mixer at a flow rate based on the dry materials premix feed rate and the resulting grout is fed into the grout hopper. There are no identified credible upset scenarios associated with this process. There is no physical or chemical mechanism that concentrates or accumulates fissile materials in the mixer. The fissile materials in the waste salt solution are well dispersed throughout the grout by mixing and agitation during its preparation (Ref. 2).

The bulk volumetric concentration of fissile materials in the grout is reduced by a factor of 1.5 (one gallon of waste salt solution yields about 1.5 gallons of grout). The fissile material concentration in the resulting grout remains much less than the single parameter subcritical concentration limit of 11.6 g ^{235}U/L for aqueous uranyl nitrate solutions established in Reference 4 (See Scenario 5.1.2). Additionally, waste salt solution contains sodium and sludge components such as iron and manganese, which act as neutron poisons, as do some of the dry materials used to produce the grout (such as iron, sodium, sulfur, potassium, and calcium). Therefore, the addition of dry materials to the waste salt solution does not pose a credible criticality concern.

Accumulation of fissile materials in the grout mixer is not a credible criticality concern because of the low concentration of fissile material in the salt solutions, the small volume of the mixer, and the mixer design features that allow all parts that come into contact with the saltstone grout to be flushed with inhibited water at the end of each daily production cycle.

5.1.7 Fissile Material Accumulation in the Grout Hopper (SDI-5-007)

Salt solution is fed from a SSRT or the SFT into the mixer at a flow rate based on the dry materials premix feed rate and the resulting grout is fed into the grout hopper.

Accumulation of fissile materials in the grout hopper is not a credible criticality concern because of the low concentration of fissile material in the salt solutions (See Scenario 5.1.4), the small volume of the grout hopper (significantly less than the 2600 gallons required to reach the single parameter subcritical mass limit, See Section 6), and the presence of spray nozzles inside the hopper for flushing the hopper with inhibited or process water at the end of each daily production cycle. As discussed in Scenario 5.1.6, grout has a lower concentration of fissile material than salt solution.

5.1.8 Fissile Material Precipitation in CCBT Due to an Inadvertent Transfer from SSRT or SFT (SDI-5-008)

This scenario postulates precipitation of fissile materials in the CCBT due to an inadvertent transfer of salt solution from a SSRT or the SFT.

Under normal operating conditions, a check valve, an isolation valve and the higher pressure (> 10 psig) in the CCBT transfer line upstream of the isolation valve, compared to ~2 psig in the salt solution transfer line at the junction with the line from the CCBT, preclude transfer of salt solution from a SSRT or the SFT to the CCBT. If the CCBT transfer pump fails to maintain the high pressure in the CCBT transfer line, the line from the CCBT is automatically isolated (a valve will close automatically to isolate the CCBT) and the Process Water system is automatically (a valve will open automatically) aligned to supply this backpressure. Thus, transfer of salt solution containing a significant amount of fissile material to the CCBT under this condition is not possible and therefore criticality in the CCBT is not credible.

Pluggage of the grout mixer during normal operation is an anticipated event. If mixer pluggage were to occur, the pressure in the salt solution line at the interface with the line from the CCBT could increase. If this were to happen, valves would prevent backflow of salt solution to the CCBT. According to Reference 32, " backflow of a significant amount of salt solution to the CCBT is considered not credible". Note that the check valve must fail during every pluggage and the isolation valve must be inadvertently left open in order for a significant amount of fissile material, as a result of multiple pluggages, to be able to enter the CCBT. Since the maximum fissile material concentration in the salt solution is 69.3 mg ^{235}U (eq)/L (See Table A-3 of Appendix A), it would require the backflow of over 2,600 gallons of salt solution to exceed the single-parameter mass limit of 700 grams ^{235}U for an optimum configuration of a UO_2F_2-H_2O system (Ref. 4).

It should be noted that the concentration of fissile material in the CCBT is less than that in a SSRT or the SFT, and there are no mechanisms in the CCBT to concentrate or accumulate fissile material in one location.

In addition to the check valve and isolation valve, an indication of low total flow to the mixer and actuation of redundant feed chute high level conductivity probes will occur as the salt solution backs up in the premix feed chute. Receipt of any of these indications causes interlocks which stop the salt solution flow and prevent backflow to the CCBT (Ref. 32). The low total flow (inhibited water + salt solution measure by a flow meter) to the mixer interlock is activated at flow rates less than 100 gpm.

During the transition from inhibited water flow to salt solution flow to the mixer at startup, or transitioning from salt solution flow to inhibited water flow at shutdown, and/or setback, the backflow of a significant amount of salt solution to the CCBT is considered not credible for essentially the same reasons as described above. Examples of salt solution to inhibited water transitions include salt solution low flow conditions at shutdown or setback, and periods of extended liquid feed following shutdown of the screw feeders.

During these transitions, there is one less design feature preventing backflow (i.e., FCV-1118 will not be closed), but the time at risk is small (incremental changes during startup transition per Reference 32 and significantly less time for the transition due to low salt solution flow). In the event that a mixer pluggage occurs during the transition, the same features described above (check valve and the associated interlocks for the low total flow to mixer and the feed chute conductivity probes) would be expected to prevent backflow of salt solution to the CCBT. Furthermore, if all of these features failed, the transition would be expected to end before a significant amount of salt solution reached the CCBT.

While an inadvertent transfer from a SSRT or the SFT to the CCBT is considered unlikely, an inadvertent transfer will remain subcritical because: 1) the concentration of fissile materials in the resulting solution in the CCBT will be less than that in a SSRT or the SFT, 2) only a small amount of fissile materials (much less than the single-parameter subcritical mass limit of 700 grams ^{235}U), due to the low concentration of fissile materials in the salt solutions (maximum 69.3 mg/L) and the limited transfer volume, will be transferred to the CCBT, and 3) any potential precipitation of fissile materials as a result of dilution of the transferred salt solution would be insufficient to cause a criticality concern due to the large CCBT inner cross section area (~25 feet in diameter). According to Reference 4, the single-parameter subcritical areal density limit for an aqueous uranyl nitrate system is 371 g $^{235}U/ft^2$. Thus, up to 182 kg ^{235}U (371 g $^{235}U/ft^2$ * π * 25 ft * 25 ft ÷ 4) when distributed uniformly at the bottom of the CCBT remains subcritical.

It should be noted that because of the low fissile material concentration in salt solutions and the large size of the CCBT, potential undetected salt solution leakage through the isolation valves between the CCBT and a SSRT or the SFT, although unlikely, is judged to be an insufficient amount of fissile material accumulation in the CCBT to pose a criticality concern.

It should also be noted that the salt solution is subcritical because of its low concentration of fissile material (Ref. 2). In the unlikely event that a significant amount of salt solution enters the CCBT, a criticality in the CCBT would not be credible due to the lack of any mechanisms to accumulate the fissile material in a critical configuration.

Therefore, a criticality in the CCBT due to an inadvertent transfer from a SSRT or the SFT is not credible.

5.1.9 Fissile Material Precipitation in Process Water Tank Due to an Inadvertent Transfer from SSRT or SFT (SDI-5-009)

This scenario postulates precipitation of fissile materials in the Process Water Tank due to an inadvertent transfer of salt solution from a SSRT or the SFT.

The Process Water Tank with a maximum capacity of 39,401 gallons has a nominal inner diameter of 21 feet and a nominal height of 16 feet. Under normal operating conditions, an isolation valve and pressure in process water lines preclude transfer of salt solution from a SSRT or the SFT to the Process Water Tank.

While an inadvertent transfer from a SSRT or the SFT to the Process Water Tank is considered unlikely, an inadvertent transfer from a SSRT or the SFT to the Process Water Tank will remain subcritical because; 1) the concentration of fissile materials in the resulting solution in the Process Water Tank will be less than that in a SSRT or the SFT, 2) only a small amount of fissile materials (less than the single parameter mass of 700 ^{235}U), due to the low concentration of fissile materials in the salt solutions and the limited transfer volume, will be transferred to the Process Water Tank, and 3) any potential precipitation of fissile materials as a result of dilution of the transferred salt solution would be insufficient to cause a criticality concern due to the large Process Water Tank inner cross section area (~ 21 feet in diameter). According to Reference 4, the single-parameter subcritical areal density for an aqueous uranyl nitrate system is 371 g $^{235}U/ft^2$. Thus, up to 128 kg ^{235}U (371 g $^{235}U/ft^2$ * π * 21 ft * 21 ft ÷ 4) when distributed uniformly at the bottom of the Process Water Tank remains subcritical.

Inadvertent salt solution transfers from a SSRT or the SFT to the Process Water Tank would be detected by not receiving salt solution in the grout mixer. Significant diversion of salt solution from the mixer would cause the mixer to malfunction. Operating experience has shown that the mixer is very sensitive to changes in salt solution flows and any mixer malfunction would result in a SSRT or the SFT pump stopping. Additionally, the Process Water Tank is normally filled to about 2,500 gallons below the overflow point at which time the auto make-up fills up the tank. Therefore, a significant leakage of salt solution to the Process Water Tank would cause the tank to overflow out onto the ground.

Long-term accumulation of a significant amount of fissile material in the Process Water Tank, due to undetected waste leaks into the Process Water Tank, which could pose a criticality concern, is incredible because of the following reasons: First, the presence of a check valve and isolation valves between the Process Water Tank and a SSRT or the SFT precludes salt solution leaks into the Process Water Tank. Second, prior to start of a SSRT or the SFT pump, Saltstone operating procedures require that the process water system be pressurized to provide the necessary process water to normal operation. Note that the design of the process water system ensures that the process water pressure remains higher than the salt solution pressure during the grout production process, thus preventing leakage of salt solution into the process water system in the unlikely event the isolation valves separating the two systems were to leak.

It should be noted that because of the very low fissile material concentration in salt solutions and the large size of the Process Water Tank, undetected salt solution leakage through the interconnecting isolation valves between the Process Water Tank and a SSRT or the SFT, although only unlikely, are not judged to be credible sources of an amount of fissile material accumulation in the Process Water Tank sufficient to pose a criticality concern. As indicated above more than 128 kg ^{235}U must be collected in the Process Water Tank to exceed the subcritical areal density limit in the tank. Assuming the maximum $^{235}U(eq)$ concentration of ~ 70 mg $^{235}U/L$ (based on Table A-3), it would take over 480,000 gallons of salt solution to exceed the areal density limit. This would require a salt solution volume of over 12 times the Process Water Tank volume leaking into the Process Water Tank with all the fissile material precipitating out and staying in the Process Water Tank. Furthermore, long-term leakage of waste into the Process Water Tank will result in a radiological concern that will be detected much earlier than it becomes a criticality concern.

Therefore, criticality in the Process Water Tank, due to an inadvertent transfer of salt solution from a SSRT or the SFT or due to small leaks through the isolation valves, is incredible.

5.1.10 Fissile Material Accumulation in Saltstone Hopper Overflow Container (SDI-5-010)

This scenario postulates accumulation of fissile materials in the SHOC.

The SHOC is a container, with an internal volume significantly less than 2600 gallons (See Section 6), that is used for receiving leftover or overflow grout from the grout hopper. As shown in Scenario 5.1.6, the fissile concentration in grout is bounded by the fissile concentration in salt solution. If an upset were to fill the SHOC with salt solution or grout, no further material would be brought into the process room until the SHOC was de-inventoried. Because of the very low concentration of fissile materials in the salt solution and the small volume of the SHOC, accumulation of enough fissile materials in the SHOC to exceed the subcritical aqueous solution fissile mass limit (see Scenario 5.1.6 and Section 6) is not a credible criticality concern.

5.1.11 Fissile Material Concentration in the SSRT or SFT due to the Solvent from MCU/SWPF (SDI-5-011)

This scenario postulates concentrating fissile material in a SSRT or the SFT due to the presence of the solvent used in the MCU/SWPF process.

The ARP/MCU NCSE, N-NCS-H-00192 (Ref. 6) discusses the characteristics (organic components and uranium and plutonium extraction capability) of the organic solvent used in MCU (and also in SWPF). The ARP/MCU NCSE allows the use of the Next Generation Solvent (NGS) in MCU along with any combination of the BOBCalixC6-based solvent (used at SWPF) and NGS. The BOBCalixC6-based solvent used BOBCalixC6 as the extractant, Cs-7SB as the modifier, Trioctyl Amine (TOA) as the suppressor, and Isopar® L as the diluent. The NGS has higher distribution coefficients for Cs and uses MaxCalix as the extractant for better Cs decontamination, Cs-7SB as the modifier, N, N',N"-tris(isodecyl)guanidine (TiDG) as the suppressor, and Isopar® L as the diluent. The ARP/MCU NCSE concludes that the variation in solvent composition has minimal impact on fissile material extraction because the NGS extracts minimal fissile material as does the BOBCalixC6-based solvent.

After removing the cesium from the alkaline salt solution in MCU/SWPF, the DSS, which contains soluble uranium and plutonium, will be transferred to Tank 50, the feed tank to a SSRT or the SFT. Under normal operations, a small amount of CSSX solvent will be carried over to Tank 50. According to Reference 19, there are a number of engineered features and operational procedure steps incorporated into MCU to ensure that the bulk average organic entrainment in the Tank 50 feed does not exceed 50 ppm Isopar® (70 ppm total organic) during normal operations and upset conditions. The organic entrainment from SWPF is limited to less than 87.5 ppm Isopar® via the Waste Acceptance Criteria.

Studies have shown that the CSSX solvent in alkaline salt solution does not appreciably extract uranium and plutonium from the alkaline salt solution (Refs. 21, 38, and 39). As discussed in the

ARP/MCU NCSE (N-NCS-H-00192), concentrations of uranium and plutonium in the solvent in contact with alkaline salt solution are no greater than the concentrations in the alkaline salt solution (which in Tank 50, a SSRT, or the SFT are much less than subcritical concentration limits). Therefore, the concentrations of fissile material in the solvent are much less than the aqueous subcritical concentration limits and criticality due to the presence of solvent in Tank 50, a SSRT, or the SFT is not credible.

Therefore, criticality in a SSRT or the SFT, due to the concentration/accumulation of fissile material in the CSSX solvent, is incredible.

5.1.12 Fissile Material Precipitation in SSRT or SFT Due to Inadvertent Transfer of Scrub or Strip Solution from MCU/SWPF (SDI-5-012)

This scenario postulates precipitation of fissile material in a SSRT or the SFT due to chemistry changes as a result of receiving an inadvertent nitric acid or boric acid transfer from MCU via Tank 50. Note: receiving material directly from the SWPF DSS Hold Tank is covered in Scenario 5.1.19.

In MCU and SWPF, a scrub solution (0.05 M nitric acid or 0.025 M NaOH) is used to remove Na+ and K+ and other impurities from the solvent. The used scrub solution is normally mixed with the aqueous feed to the extraction contactors. The cesium is stripped from the solvent with 0.01 M boric acid (H_3BO_3) (which is optimum for MaxCalix-based solvent) or 0.001 M nitric acid (HNO_3) (used with BOBCalixC6-based solvent).

A SSRT or the SFT receives DSS via Tank 50. The DSS is stored in the DSS Hold Tank (DSSHT) (called the same in both MCU and SWPF), prior to transfer to Tank 50, and eventually to a SSRT or the SFT. If the acid to be used in the scrub solution or in the strip solution is transferred to the DSSHT, it will cause a slight decrease in the pH of the DSS. Because the solubility of uranium and plutonium in alkaline solutions is dependent on pH, this pH decrease could cause the uranium and plutonium concentrations to exceed the solubility limits, resulting in the precipitation of fissile material. The only identifiable means of causing a significant pH change in a SSRT or the SFT occurs from an inadvertent transfer of a significant amount of nitric acid from the scrubbing system or boric acid from the stripping system to the DSSHT located in MCU or SWPF, which eventually feeds a SSRT or the SFT via Tank 50.

An inadvertent transfer of acid to the DSSHT is unlikely due to facility design (Ref. 22). However, to examine the impact of an inadvertent transfer, Hobbs conducted studies on the precipitation of uranium and plutonium solids upon addition of 0.2 M nitric acid to salt solutions in the DSSHT (Ref. 22). Hobbs reported that under normal operations at nominal contact volumes and operating times, the uranium would not precipitate. However, uranium precipitation could occur after mixing large volumes of nitric acid and extended storage in the DSSHT. The maximum quantity of uranium estimated to precipitate is 2.96 mg/gallon (296 ÷ 100,000) for DSS 100% saturated in uranium, based on Reference 22. This was for the full-scale facility (SWPF) and bounds MCU.

The estimate of the maximum mass of uranium precipitating in the DSSHT (2.96 mg/gallon) is based on several conservatisms. First, it is based on a model with equilibrium conditions achieved after 129-day mixing, which yields the most conservative value. The desired processing rate does not accommodate normally holding the DSSHT for months.

Second, under normal operations, the volume ratio of scrub acid to salt solution is about 1 part scrub acid to 15 parts salt solution (Ref. 22), which corresponds to a dilution factor of 1.07 (16÷15). Hobbs has reported that the minimum dilution factor needed to initiate uranium solids precipitation is 4.47 for 100% uranium saturated solution. In order to initiate uranium solids precipitation, the amount of scrub acid needed is at least 25 times the normal amount of acid used and major process upsets must occur for this to happen. Furthermore, the concentration of uranium and plutonium is much less than that due to the strontium/alpha treatment. Testing has shown that the strontium/alpha treatment (or Actinide Removal Process) will reduce the uranium content to less than 75% of the saturated value (Ref. 22). This provides additional assurance that in an upset event the quantity of precipitated fissile material is small.

Third, Hobbs assumed a concentration of 0.2 M nitric acid, whereas the nitric acid used in MCU normal operations is only 0.05 M. The lower acid concentration used in MCU provides a lower degree of neutralization with a higher dilution factor which gives assurance that little or no fissile material will precipitate in the DSSHT in an excess scrub acid addition upset event.

Unlike uranium, the addition of scrub acid at either 1 or 2 parts scrub acid to 15 parts salt solution (100% plutonium saturated) results in the plutonium concentration in the salt solution exceeding the plutonium solubility limit and causing precipitation of small quantities of plutonium (Ref. 22). For alkaline salt solutions, the solubility limit for plutonium is 1.68 mg/l (Ref. 24). Hobbs states the maximum amount of precipitated plutonium during normal or off-normal activities would be 150 grams, significantly less than the 450-gram maximum subcritical plutonium mass. This value was applicable to SWPF and bounds the smaller MCU. This is conservative as it assumes the plutonium started 100% saturated, ignoring any adsorption occurring in ARP. The above argument demonstrates that a criticality accident in DSSHT due to the addition of scrub nitric acid is deemed incredible. Since any transfers from DSSHT to Tank 50 (and then to a SSRT or the SFT) of DSS exposed to a significant amount of scrub acid will result in further dilution of the acid both in Tank 50 and in a SSRT or the SFT, the effect of the acid in a SSRT or the SFT will be much less than in the DSSHT.

Boric acid is a weaker acid than nitric acid and its effects on the DSS will be bounded by the nitric acid effects. Reference 42 examined the impact of boric acid strip effluent on the DWPF Chemical Process Cell SRAT/SME process and concluded that the "SRAT/SME product pH and dissolved metal content were not impacted by the change in strip acid". The effect of NaOH as the scrub is also bounded by the effect of nitric acid.

In addition, Saltstone places a pH limit on the incoming feed which would prohibit acidic material from being sent to the SSRT or SFT (Ref. 18).

Therefore, criticality in a SSRT or the SFT due to the addition of scrub or strip solution to DSSHT with subsequent transfer to a SSRT or the SFT is not credible.

5.1.13 Fissile Material Precipitation/Accumulation in SSRT or SFT and Grout Mixer due to Q2 (ACP) and Daratard 17 Additions (SDI-5-013)

This scenario postulates potential precipitation/accumulation of fissile material in a SSRT or the SFT and grout mixer due to the addition of Q2 (ACP) and Daratard 17.

Due to the size of the admixture tank, inadvertently sending salt solution back to the admixture tank is not a criticality concern.

As stated in Section 2.1, the anti-foaming admixture (or ACP) is an active silicone antifoam compound that is easily dispersed in water and organic solvents (Ref. 34, 41). The set retardant admixture Daratard 17 is a mixture of corn syrup, water and calcium lignosulfonate with a pH range of 5-8 and is added to the salt solution to delay concrete setting time inside piping and equipment (Ref. 35). Chemical reactions with the salt solution (e.g., resulting in precipitation of salt components) are not expected.

During operations, Saltstone has experienced problems with foaming. Diluted anti-foaming admixture Q2 (ACP) is introduced to the continuous grout mixer along with the salt solution at a nominal rate of less than or equal to 0.25 gal/min. Daratard 17 is also introduced to the continuous grout mixer along with the salt solution at a nominal rate of less than or equal to 0.25 gal/min to delay concrete setting time inside piping and equipment (Ref. 34). The admixture-injected salt solution is fed to the grout mixer at a rate of ~100 gal/min. The admixtures are stored in two 300-gallon tanks (Ref. 2). The salt solution and grout mixture will be transferred to the SDU.

The admixtures and waste are fully mixed when the waste reaches the grout mixer. While the Q2 (ACP) and Daratard 17 are not expected to alter the salt solution chemistry, if they were to cause any precipitation of fissile material, the probable location for the reaction would be downstream of a SSRT or the SFT, where precipitation of fissile material is not a criticality concern due to the low concentration of fissile material in the salt solution and the small volume of equipment (piping, mixer, hopper) involved.

The maximum fissile material concentration in the grout is 0.336 g ^{235}U (eq)/L grout (See Appendix A). Thus, the fissile material concentration in the resulting grout remains significantly less than the single-parameter subcritical concentration limit of 11.6 g ^{235}U/L for aqueous uranyl nitrate solutions (Ref. 4). Also, in the unlikely event of significant precipitation, there is no physical or chemical mechanism that would concentrate or accumulate fissile materials in the mixer or hopper. The fissile materials are well dispersed throughout the grout by the mixing and agitation during normal operations.

The admixtures are introduced at the SSRT or SFT pump start up (~30 minutes) when the valve to the mixer is closed and the salt solution is recirculated into a SSRT or the SFT. This would allow ~7.5 gallons of diluted Q2 (ACP) (30 min * 0.25 gal/min) and ~7.5 gallons of Daratard 17 (30 min * 0.25 gal/min) into a SSRT or the SFT. This addition of admixtures to a tank is not expected to alter the pH of the salt solution resulting in precipitation of fissile material because

as the new salt solution is added to a SSRT or the SFT during grout production, the concentrations of the admixtures in a SSRT or the SFT are reduced. Criticality in a SSRT or the SFT involving precipitation of fissile material due to admixture addition is not credible because of the following facts:

- The admixture are not expect to significantly alter the salt chemistry (the Daratard 17 has a pH range of 5-8). The minimum volume of salt solution required to exceed a subcritical mass is 2,668 gallons. Even if slight chemistry changes did occur, the maximum volume of 600 gallons of admixture would not decrease the pH more than the acid addition to the DSSHT discussed in Scenario 5.1.12. Once pumping of the salt solution to the grout mixer is started, salt solution is continually added to a SSRT or the SFT from Tank 50, decreasing the volume fraction of admixtures in a SSRT or the SFT and reducing any possibility of precipitation due to the presence of the admixtures.
- The maximum fissile material concentration in the salt solution is 69.3 mg ^{235}U (eq)/L (See Table A-3 of Appendix A), more than a factor of 100 less than the single parameter subcritical concentration limit for ^{235}U (Ref. 4).
- A SSRT has a large interior cross section area (26 feet in diameter, Ref. 41). As discussed in Scenario 5.1.3, precipitation in a SSRT is not a criticality concern. As discussed above, the small volumes of admixtures will not cause complete precipitation of fissile material.

Therefore, precipitation/accumulation of fissile materials in a SSRT or in the grout mixer due to the presence of the admixtures is not a credible criticality concern.

5.1.14 Accumulation and Concentration of Fissile Material in the SSRT Containment Enclosure after a large leak (SDI-5-016)

The SSRT containment dikes have sumps to collect leaks. This scenario postulates a large leak into the sump resulting in a critical configuration. The salt solution has a maximum fissile concentration that is over 150 times less than the Reference 4 subcritical limit of 11.6 g ^{235}U(eq)/L. A large leak would be detected and pumped to a tank prior to being allowed to concentrate (e.g., evaporate) by a factor of 150. In addition, the sumps are rectangular with dimensions of 4 ft x 5 ft and 3 ft 1 inch high, giving a volume of less than 500 gallons (Ref. 25). This is less than 20% of the required volume to exceed a subcritical mass (2,668 gallons). A large leak, containing greater than a subcritical mass, would overflow the sump and spread on the floor. Due to the low concentration of fissile material in the solution, it is not credible to exceed the subcritical areal density limit (0.4 g/cm^2) on the floor.

Therefore, a criticality in the SSRT room due to a large leak of salt solution is not credible.

5.1.15 Long Term Accumulation of Fissile Material in the SSRT Containment Enclosure due to a small leak (SDI-5-017)

Scenario 5.1.14 demonstrated that a large leak in a SSRT containment enclosure could not lead to a criticality. This scenario postulates several small leaks occurring over time, not being detected, and allowed to evaporate.

Small leaks would likely spill onto the floor and evaporate without collecting in the sump. As discussed in scenario 5.1.14, due to the low concentration of fissile material, it is not credible to leak enough salt solution to exceed the areal density on the floor.

There is the potential for small leaks to collect in the sump and evaporate leaving the fissile material in the sump. Also, rain water or a large leak could carry any fissile material left on the floor to the sump. The sump has an area of 20 ft^2. The ANSI/ANS 8.1 areal density limit is 0.4 g/cm^2. As there is no mechanism in the sump to preferentially collect fissile material, the sump can contain 7,400 grams of ^{235}U(eq) without exceeding the areal density limit [Section 6]. Based on the DSA concentration limit, this would require over 28,000 (7,400 g ÷ 0.0693 g/L ÷ 3.785 L/gal) gallons of salt solution. Assuming leaks totaled 10 gallons/day and were not detected and removed from the dike, it would take over 7.5 years to exceed 28,000 gallons. These sumps receive rain water, which is detected. The sump material is sent back to the SSRT. It is not credible that 28,000 gallons of salt solution material could collect in the sump. This analysis is based on the DSA limit for concentration, which is much higher than the solubility limit of alkaline solution that would come from the tank farm. Assuming 100 wt% enriched uranium at 28.78 mg/L (the ^{235}U(eq) solubility limit, see Appendix A), it would take over 18.5 years to accumulate 7,400 grams of ^{235}U(eq).

Therefore, a criticality due to accumulation of small leaks is not credible.

5.1.16 Accumulation of Fissile Material in the CCBT or SFT room due to a leak (SDI-5-019, SDI-5-020)

The CCBT does not usually contain fissile material. The SFT may contain fissile material from Tank 50. In addition, the transfer line carrying salt solution to and from the SSRT runs through the CCBT and SFT containment. Therefore, it is possible to have a leak into either area that would contain fissile material. Both the CCBT and SFT dikes contain a 3 x 3 sump (Ref. 47). A large leak would evaporate on the floor, and as discussed in 5.1.14, it is not credible to exceed the areal density on the floor.

Similar to the discussion in Scenario 5.1.15, the CCBT or SFT sump would have to contain 3,344 grams ^{235}U(eq) to exceed the areal density limit [Section 6]. Assuming a 10 gal/day leak, it would take 3.5 years to accumulate sufficient fissile to exceed the areal density of the sump.

Therefore, a criticality due to accumulation of leaks in the CCBT or SFT containment room is not credible.

5.1.17 Accumulation of Fissile Material in the 210-Z Process Room due to a leak (SDI-5-018)

Salt solution can leak into the process room. The process room does not contain a sump. Instead it has a trench which drains to the SFT (Ref. 33). The trench is 2 ft 6 inches wide and 13 ft long (Ref. 48). The process room has the potential for a leak of less than 15,915 gallons (current scenario is 15,113.5 gallons of salt solution and 407 gallons of grout) followed by a fire during a high wind/tornado event (Ref. 46). This spill could contain 4,200 grams of ^{235}U(eq), assuming

the solution is at the DSA limit [Section 6]. As the trench area is 32.5 ft^2, over 12,000 grams has to accumulate to exceed the areal density of the trench [Section 6]. Small leaks are not a concern for the process room as there is no collection point. If the drain to the SFT was plugged, the small leaks would not have a collection point and would be similar to a large leak and spread over the trench.

Therefore, a criticality due to accumulation of leaks in the process room is not credible.

5.1.18 Freezing of material in the SSRT or SFT (SDI-5-021)

This scenario postulates a criticality in a SSRT due to the tank material freezing. Reference 43 indicates that the temperature in a SSRT (with a minimum working volume of 8,235 gallons) could potentially drop to below freezing. The freezing temperature of seawater, and assumed to be equivalent to salt solution, is -1.8 ºC. Reference 49 examined freezing of UNH solutions and determined that the water in solution was frozen first, concentrating the fissile material in solution. Therefore, freezing may concentrate the uranium in the SSRT.

The solution is assumed to completely freeze, though in reality, a complete freeze is not likely. A solubility increase from 3.5 wt% (35 parts salt per thousand in seawater to get the -1.8 ºC) to ~15 wt% would depress the freezing point to -11 ºC (Ref. 50).

The DSA limit for fissile concentration is 69.3 mg ^{235}U(eq)/L, a factor of 150 less than the subcritical concentration limit. Reference 49 showed that some uranium was frozen and concentration only increased by a factor of 5 while the liquid volume reduced by a factor of 20. Though the experiment was for acidic solutions, not a caustic solution (like the salt solution), it demonstrates it is not credible to concentrate the uranium by a factor of 150 due to freezing. The more likely scenario is the ice particles would become seeds for uranium precipitation as the concentration exceeds the solubility limit. Scenario 5.1.3 discusses the precipitation of fissile material in a SSRT or the SFT. It showed the uranium could not precipitate and exceed the areal density limit for a SSRT or the SFT. Due to the low solubility of fissile material in caustic solutions, it is not credible that over 90% of the tank would freeze prior to precipitation of fissile material.

Based on the above discussion, it is not credible that freezing of solution in a SSRT or the SFT can result in a criticality in Saltstone.

5.1.19 Inadvertent transfer from SWPF (SDI-5-022)

The SWPF transfers salt solution to Tank 50 for disposal in Saltstone. However, unlike MCU, SWPF does not have a direct transfer line to Tank 50. Therefore, it is possible for SWPF to inadvertently transfer directly to Saltstone. This scenario postulates an inadvertent transfer from the SWPF DSS Hold Tank leading to a criticality in Saltstone. The MST/sludge solids are sent to DWPF and cannot be sent to Saltstone.

The SWPF DSS Hold Tank is 43,600 gallons (Ref. 20). The hold tank contains the salt solution that is sent to Saltstone via Tank 50. The inadvertent transfer of SWPF material meant for Tank

50 being sent to Saltstone does not create a criticality concern. During normal operations, the DSS from SWPF will have a lower concentration than the incoming feed as the salt solution will have been struck with MST to remove fissile material. The incoming feed to SWPF has a fissile concentration below the Saltstone WAC limit (Ref. 20). Therefore, an inadvertent transfer would still be within the values analyzed by this NCSE. A large inadvertent transfer may overflow the SSRT, but this would be similar to a large leak covered by Scenario 5.1.14. Inadvertently transferring the entire tank from SWPF would bound any residual material in the transfer line.

The second potential for an inadvertent transfer is for SWPF to have an inadvertent transfer into the DSS Hold Tank and that being inadvertently sent to Tank 50 or Saltstone. Scenario 5.5.2 in Reference 20 states that the maximum bounding credible fissile material accumulation for material from acid cleaning is 1083.9 g ^{235}U and 877.2 g ^{239}Pu giving 3.06 kg ^{235}U(eq) (1083.9 g ^{235}U + 2.25 * 877.2 g ^{239}Pu / 1000). Acid cleaning was the only upset identified to send a significant amount of fissile material to the DSS Hold Tank. As the DSS Hold Tank is 43,600 gallons, this corresponds to a fissile concentration of 18.5 mg/L, a little over 26% of the WAC limit analyzed in this NCSE. While this material may be precipitated and not in solution, the 3.06 kg ^{235}U(eq) is significantly below the 17.181 kg ^{235}U(eq) analyzed in Scenario 5.1.3 for precipitation of fissile material in the SSRT.

Based on the above discussion, it is not credible that an inadvertent transfer from SWPF can result in a criticality in Saltstone.

5.2 SALTSTONE DISPOSAL FACILITY

Postulated contingencies in the SDF involve concentration of fissile materials during grout hydration reactions and accumulation of fissile materials in the grout placed in an SDU cell. These scenarios apply to any style SDU.

5.2.1 Fissile Material Accumulation/Concentration in Saltstone Disposal Units (SDI-5-014)

Grout placed in an SDU cell sets to a stable solid. There are no credible criticality scenarios identified for this process because there is no credible mechanism to collect or concentrate fissile materials within the grout. After the grout gels (generally 1-2 hours after placement in the SDU), the fissile materials are no longer in a form that are readily dispersible and there are no physical or chemical mechanisms that preferentially accumulate fissile materials in one location within the grout (Ref. 2). Therefore, this scenario does not pose a credible criticality concern.

5.2.2 Grout Hydration Reactions (SDI-5-015)

Hydration reactions convert the grout to a stable solid that immobilizes all fissile materials in the solidified grout matrix. When the heat of hydration occurs, the water molecules become part of the grout matrix. The water molecules do not evaporate nor are they absorbed by the grout-producing materials. According to Appendix A, the maximum concentration in the grout is 0.336 g ^{235}U(eq)/ L grout, a factor of 34 below the single-parameter subcritical concentration limit of 11.6 g/L of ^{235}U established in Reference 4. Based on hydration calculations presented

in the Radiological Performance Assessment (Ref. 26), the concentration of fissile material in the grout increases by a factor of 1.22. While Reference 26 has been superseded and the new document does not perform a hydration calculation, the reference is not used to call out a specific value, but to demonstrate the hydration reactions will not significantly concentrate the fissile material compared to the subcritical limit. Therefore, this scenario does not pose a credible criticality concern.

6.0 CALCULATIONS AND RESULTS

This NCSE was performed based on the single-parameter concentration and areal density for ^{235}U in $UO_2(NO_3)_2$ solutions to demonstrate the criticality safety of fissile material concentration in salt solutions during normal and all credible abnormal operations involving processing and disposal of waste salt solutions in Z-Area. No computer code calculations for determining criticality safety limits were required. Calculations to convert the DSA activity limits to equivalent fissile quantities as well as $^{235}U(eq)$ concentration in the grout are provided in Appendix A.

<u>Salt Solution Volume Corresponding to Subcritical Mass</u>
The Saltstone DSA concentration limit for fissile material (i.e., $^{235}U_{eq}$) in salt solution is 69.3 mg/L (see Appendix A). The subcritical mass limit for ^{235}U in an aqueous solution is 700 g (Ref. 4). Therefore, at least 2,668 gallons of salt solution must be present prior to exceeding a subcritical mass limit.

700 g x 1000 mg/g / 69.3 mg/L x 1 gallon/3.785 L = 2,668 gallons

<u>Maximum Mass in SSRT</u>

A SSRT can hold 65,500 gallons of salt solution at overflow (Ref. 1) with a DSA limit of 69.3 mg $^{235}U(eq)$/L. This gives a maximum of 17,181 grams $^{235}U(eq)$ in a SSRT.

65,500 gallons x 3.785 liters/gallon x 69.3 mg/L x 1 g/1000 mg = 17,181 grams

<u>Areal Density Calculations</u>

The subcritical areal density limit for ^{235}U is 0.4 g/cm^2 (Ref. 4). Therefore, the maximum fissile mass in a SSRT would have to accumulate in 42,952 cm^2 to exceed the subcritical areal density limit.

17,181 g / 0.4 g/cm^2 = 42,952 cm^2 x 1 in/2.54 cm x 1 in/2.54 cm = 6,657 in^2

The SSRT containment enclosure has a 4 ft by 5 ft sump (Ref. 25). Therefore, it can hold 7,432 grams without exceeding the subcritical areal density limit and it would take 28,333 gallons to exceed this mass.

4 ft x 30.48 cm/ft x 5 ft x 30.48 cm/ft x 0.4 g/cm^2 = 7,432 grams

7432 g x 1000 mg/g / 69.3 mg/L x 1 gal/3.785 L = 28,333 gallons

The CCBT and SFT containment enclosures have a 3 ft x 3 ft sump (Ref. 47). Therefore, one of these enclosures can hold 3,344 grams without exceeding the subcritical areal density limit and it would take 12,748 gallons to exceed this mass.

3 ft x 30.48 cm/ft x 3 ft x 30.48 cm/ft x 0.4 g/cm^2 = 3,344 grams

3344 g x 1000 mg/g / 69.3 mg/L x 1 gal/3.785 L = 12,748 gallons

<u>SSRT Volume and Area Calculations</u>

The liquid volume calculation for a SSRT as a function of liquid height is determined below. The tank bottom characteristics are taken from Reference 1.

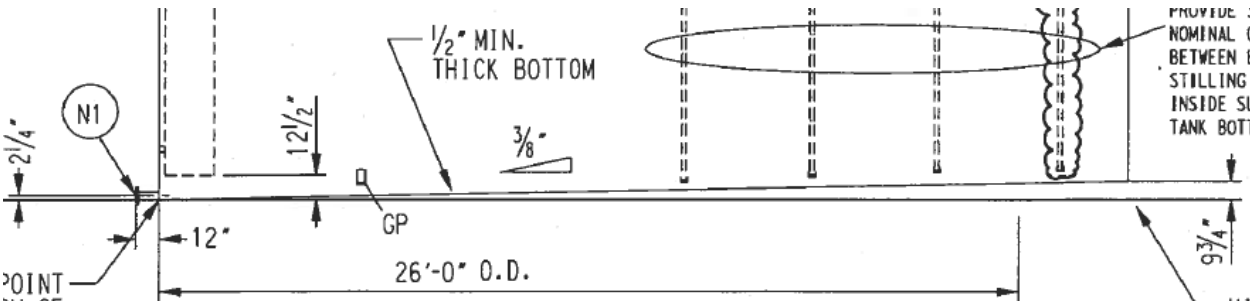

The midpoint of the nozzle is 2.25" from the bottom of the tank (which has a 0.5" minimum thickness) and the tank slopes to a height of 9.75 inches. The volume of the heel can be calculated via the following:

$h_m := 2.25in$ height of the midpoint of the outlet nozzle

$h_b := .25in$ height of the bottom of the outlet nozzle

$y(x) := \frac{9.75in}{26ft} \cdot x$ height of the sloped floor as a function of the distance from the nozzle

$c(x) := 2 \cdot \sqrt{r^2 - (r - x)^2}$ chord length as a function of the distance from the nozzle

$len(h) := \begin{cases} \frac{26ft}{9.75in} \cdot h \\ 26ft \text{ if } h \geq 9.75in \end{cases}$ length of floor along tank diameter that is covered with liquid

$v(h) := \int_0^{len(h)} (h - y(x)) \cdot c(x)\, dx$ volume of the heel

Similarly, the area of the heel can be found by integrating over the chord length c(x)

The following table gives the volume (in^3) and area (in^2) based on the height of the liquid.

Table 2 SSRT Heel Volume

Height (in.)	Volume (in^3)	Area (in^2)
0.5	298.12	1483.88
1	1667.27	4129.57
1.39	3763.37	6662.24
1.5	4540.85	7460.04
2	9209.66	11286.6

7.0 DESIGN FEATURES AND ADMINISTRATIVE LIMITS & REQUIREMENTS

This evaluation is valid for fissile material concentrations in salt solutions that result in fissile activity limits less than or equal to the DSA limits presented in Reference 2. The WAC Program ensures that the fissile material concentrations in the waste streams received into the facility are within the DSA limits.

7.1 ASSUMPTIONS

None.

7.2 DESIGN FEATURES

There are no specific design features related to nuclear criticality for activities involving processing and disposal of waste salt solutions in Z-Area as analyzed in this NCSE. All future modifications of the Saltstone process flow pertinent to criticality safety as discussed in Section 5.0 shall be evaluated prior to processing salt solutions.

7.3 ADMINISTRATIVE LIMITS AND REQUIREMENTS

None.

8.0 SUMMARY AND CONCLUSIONS

This NCSE demonstrates that no credible criticality scenarios were identified for activities involving processing and disposal of salt solutions in Z-Area, from either MCU or SWPF. The incredibility of a criticality event is primarily due to the inherently low fissile material concentrations in the alkaline salt solutions. The use of either the Next Generation Solvent (NGS) or BOBCalixC6 by the salt processing facility (i.e., MCU or SWPF) has negligible impact on processing and disposal of salt solutions in Z-Area. Therefore, processing and disposal of salt solutions in Z-Area are inherently subcritical.

The scope of this NCSE is limited to the concentrations of fissile materials in the salt solution corresponding to the activity levels specified in Table 1 as Documented Safety Analysis (DSA) limits for receipt of waste salt solutions in the SPF. Processing of salt solutions with fissile material activities in excess of those specified in the DSA requires further evaluation and is outside the scope of this NCSE.

Because of the nature of the process and the incredibility of a criticality accident (based on the analysis performed herein), the requirements of SCD-3 (Ref. 8) related to Nuclear Incident Monitor (NIM) placement/evacuation zone are not required for activities involving processing and disposal of salt solutions in Z-Area.

Moderation control is not a barrier listed in Section 7 of this NCSE. Therefore, there is no control on moderation and criticality does not need to be considered in the fire plan.

9.0 REFERENCES

1. "Salt Solution Receipt Tank Data Sheet," M-DS-Z-00026, Rev. 5, November 2011.
2. "Saltstone Facility Documented Safety Analysis," WSRC-SA-2003-00001.
3. "Criticality Safety Methods Manual," SRNS-IM-2009-00035, Rev. 6, December 2017
4. ANSI/ANS-8.1, "American National Standard, Nuclear Criticality Safety in Operations with Fissionable Materials Outside Reactors," American Nuclear Society, 2014.
5. Murray, M. to Freed, E. and Ross, R., "Standardization of Uranium Equivalency Factors for High Level Waste (HLW)," WSMS-CRT-02-0087, Rev. 2, March 19, 2003.
6. Barnett M. H., "NCSE: Actinide Removal Process and Modular CSSX Unit (U)," N-NCS-H-00192, Revision 15, February 2017.
7. Saltstone Input Deck, http://pceweb.srs.gov/inputdeck.
8. SCD-3, "Nuclear Criticality Safety Manual (U)," Rev. 30, October 2016.
9. Karraker, D. G., "Uranium Settling Rates in SRS Supernate," WSRC-TR-94-058, January 1994.
10. Barnett, M. H., "NCSE: Tank 50 Valve Box Transfers, "N-NCS-H-00132, Rev. 3, June 2013.
11. Laurinet, J. E., "Effects of Temperature on Uranium Solubility in Alkaline Solutions (U)," X-CLC-Z-00008, Rev. 0, June 11, 2002, Westinghouse Savannah River Company, Aiken, SC.
12. Hobbs, D. T., Edwards, T. B. and Fleischman, S. D., "Solubility of Plutonium and Uranium in Alkaline Salt Solutions," WSRC-TR-93-056, 1993.
13. Murray, M. D., "Nuclear Criticality Safety Evaluation: H-Canyon Waste Stream Poisoning with Fe and Mn (U)," N-NCS-H-00152, Rev. 0, February 2003.
14. Concentration, Storage, and Transfer Facilities Documented Safety Analysis "Chapter 6 Prevention of Inadvertent Criticality," WSRC-SA-2002-00007.
15. Karraker, D. G. to Crook, S. E., "Absorption Measurements on Saltstone Components," SRT-ATS-2002-00069, September 16, 2002.
16. Hobbs, D. T. and Oji, L. N., "Evaluation of the Effects of Tank 50H Solids on Dissolved Uranium, Plutonium, and Neptunium," WSRC-TR-2003-00114, Rev. 0, February 28, 2003.
17. McCoid, K. J., "Tank 50 Solids," N-NCS-H-00165, Rev. 1, May 2003.
18. "Waste Acceptance Criteria for Aqueous Waste Sent to the Z-Area Saltstone Production Facility," X-SD-Z-00001.
19. Brass, E., "MCU Solvent Entrainment in Aqueous Raffinate Streams," LWO-SPT-2006-00026, Rev. 0, August 2006.
20. "NCSE: Fissile Concentration Due to MST," N-NCS-J-00005, Rev. 1, January 2017..

21. Moyer, B. A., "Caustic-Side Solvent Extraction Chemical and Physical Properties Progress in FY 2000 and FY 2001," ORNL/TM-2001-285, February 2002.
22. Hobbs, D. T., "Potential for the Precipitation of Uranium and Plutonium Solids upon Addition of Nitric Acid to Waste Solutions in a Caustic-Side Solvent Extraction Process," WSRC-TR-2002-00054, Rev. 1, July 2009.
23. "Task Requirements and Criteria: Modular Caustic Side Solvent Extraction Unit (MCU)," G-TC-H-00041, Rev. 12, January 2008.
24. Hobbs, D. T., "Solubility of Plutonium and Uranium in Alkaline Salt Solutions," WSRC-TR-93-056, February 12, 1993.
25. "Saltstone Production Facility – Z-Area Tank 50 Return to Service SSRT Tank Enclosure Design Concrete Plan, Sections & Detail," C-CC-Z-00033, Rev. 2, May 2011.
26. "Radiological Performance Assessment for the Z-Area Saltstone Disposal Facility," WSRC-RP-92-1360, Rev. 0, Westinghouse Savannah River Company, Aiken, SC, December 18, 1992.
27. "Chart of the Nuclides", Knolls Atomic Power Laboratory/ Lockheed Martin Corporation, 16th Edition, 2002.
28. Neuville, J. R., "Engineering Position Paper: Determine the Flow Condition between the SFT and CCBT after the Grout Mixer becomes plugged," LWO-WSE-2007-00140, August 7, 2007.
29. "Material Safety Data Sheet – Portland Cement," MSDS 25610, Revised October 24, 2001, Holman Inc., Dundee, MI.
30. "Material Safety Data Sheet – Class F Fly Ash from Bituminous Coal," MSDS 37526, Revised June 2010, The SEFA Group.
31. "Material Safety Data Sheet – Ground Granulated BlasFurnace Slag (GGBFS)," MSDS 27192, Revised October 24, 2001, Holman Inc., Dundee, MI.
32. "Saltstone Facility Consolidated Hazard Analysis (U)," WSRC-TR-2001-00574, Rev. 18, December 2017.
33. Drawing #M-M6-Z-0074, "Waste Solidification Projects – Saltstone Facility – Salt Feed Tank Piping and Instrumentation Diagram," Rev. 25, December 2012.
34. X-SPP-Z-00001, Revision 1, "Specification for the Procurement of Diluted Dow Corning Q2-3183A Antifoam Solution for the Saltstone Facility (U)," June 3, 2009.
X-SPP-Z-00005, Revision 0, "Specification for the Procurement of Diluted Dow Corning Xiameter ACP-3183 Antifoam Solution for the Saltstone Facility (U)," August 14, 2012.
USQ-SS-2012-00113, "Approval of X-SPP-Z-00005, Specification for the Procurement of Diluted Dow Corning Xiameter ACP-3183 Antifoam Solution for the Saltstone Facility, Rev. 0 (U)," May 17, 2012.
35. Material Safety Data Sheet for Daratard 17 (as of 1/15/2013) available at: http://www na.graceconstruction.com/concrete/download/Daratard%2017-D-06778%20English.pdf.
36. Adams, J. L., "Evaluation of Flammability Impact of Transfer From the Salt Feed Tank to the Clean Cap Batch Tank (U)," X-ESR-Z-00002, Rev. 2, October 2008.

37. "Criticality Safety Program Description Document for the M&O Contractor (Savannah River Nuclear Solutions) and Liquid Waste Contractor (Savannah River Remediation)," N-NCS-G-00136, Rev. 3, October 2016.

38. Peters, T. B. and Fink, S. D., "Investigation of Plutonium and Uranium Uptake into MCU Solvent and Next Generation Solvent," SRNL-STI-2011-00746, Revision 0, January 2012.

39. "Liquid Waste Nuclear Criticality Safety Input Deck," N-CLC-G-00118, Rev. 10, February 2013 (Appendix N, "Uranium and Plutonium D Values in Next Generation Solvent (NGS) for Use in the Modular Caustic Side Solvent Extraction Unit (MCU)").

40. "Safety Basis Strategy Next Generation Solvent", U-SBS-H-00011, Revision 0, January 2013.

41. Material Safety Data Sheet for Q2-3183A (as of 1/15/2013) available at http://www.dowcorning.com/applications/search/products/details.aspx?prod=01603183&type=PROD. Material Safety Data Sheet for ACP-3183 (as of 1/15/2013) available at https://www.xiameter.com/EN/Products/Pages/ProductDetail.aspx?pid=01603183&lir=X268.

42. Newell, J. D., Peeler, D. K., Edwards, T. B., Hay, M. S., and Stone, M. E., "DWPF Flowsheet Studies with Simulant to Determine the Impact of Next Generation Solvent on the CPC Process and Glass Formation," SRNL-STI-2011-00273, June 30, 2011.

43. McAllister, J. E. and Mohiuddin, A., "Limiting Thermal Response of Salt Solution Receipt Tanks (SSRT) (U)," S-CLC-Z-00098, Rev. 3, November 2017.

44. Thomas, J. T., "Nuclear Safety Guide," TID-7016, Revision 2, NUREG/CR-0095 (ORNL/NUREG/ CSD-6), June 1978.

45. Swingle, R. F., "Results of Analyses of Tank 37H Criticality Salt Samples (HTK-493 and 494)," WSRC-TR-2002-00244, Rev. 0, May 2002.

46. Allison, D. K., "Saltstone Chemical Consequence Analysis for Fire (U), S-CLC-Z-00090, Rev. 2, November 2017.

47. "Savannah River Plant – 200Z Area Defense Waste Processing Facility-Saltstone Clean Cap Batch and Salt Feed Tank Enclosure Floor & Foundation Plan and Sections," W780591, Rev. 5.

48. "Savannah River Plant – 200Z Area Defense Waste Processing Facility-Saltstone Process Building Floor Slab Plan," W780556, Rev. 5.

49. "Freezing of UNH Solutions," Memo from H. P. Holcomb to C. E. Pickett, January 30, 1986.

50. Bodnar, R. J., "Revised equation and table for determining the freezing point depression of H_2O-NaCl solutions," Geochimica et Cosmochimica Acta Vol. 57. pp 683-684.

51. SCD-11, "Consolidated Hazards Analysis Process—Program and Methods Manual (U)."

52. Armstead, F. L., Gamma Source Strength, Inhalation Dose Potential, Heat Rate and Hydrogen Generation Rate for Saltstone Processing, N-CLC-Z-00023, Rev. 2, February 2017.

APPENDIX A: MAXIMUM ^{235}U EQUIVALENT CONCENTRATION IN GROUT

According to Reference 2, the following maximum activity limits in the salt solutions have been implemented for the saltstone process:

Table A-1. DSA Fissile Activity Limits

Isotopes	DSA Source Term (pCi/mL)
^{233}U	1.25E+04
^{235}U	1.25E+02
^{239}Pu	2.66E+05
^{241}Pu	9.31E+05

The fissile curium and americium isotopes do not have a DSA limit. However, due to the limited amount of fissile curium and americium in the tank farm (and the majority of that is in sludge), these are not a criticality concern in Saltstone.

The above activity limits can be converted to mg ^{235}U (eq)/L using the following equation:

$$\frac{mg\ ^{235}U_{eq}}{L} = ST_i\left(\frac{pCi}{mL}\right)\times\frac{1Ci}{1\times10^{12}\ pCi}\times\frac{3.7\times10^{10}\ dps}{1Ci}\times\frac{1}{\lambda_i}\left(\frac{atom}{dps}\right)\times\frac{1mol}{6.022\times10^{23}\ atoms}$$

$$\times AW_i\left(\frac{g}{mol}\right)\times EF_i\left(\frac{g\ ^{235}U_{eq}}{g}\right)\times\frac{1000mg\ ^{235}U_{eq}}{1g\ ^{235}U_{eq}}\times\frac{1000mL}{1L}$$

Where,

ST_i: DSA Source Term for isotope i per Reference 2
λ_i: Decay constant in s^{-1} given by $\ln(2)/T_{1/2}$ ($T_{1/2}$ is the half life of isotope i)
AW_i: Atomic Weight for isotope i
EF_i: ^{235}U Equivalency Factor for isotope i

Table A-2 shows the half life and decay constants for the fissile isotopes present in the salt solutions.

Table A-2. Decay Constants for the DSA Fissile Isotopes

Isotopes	Half Life ($T_{1/2}$) [27] (years)	decay Constant (λ) (1/sec)
^{233}U	1.592E5	1.38063E-13
^{235}U	7.04E8	3.12210E-17
^{239}Pu	2.41E4	9.12015E-13
^{241}Pu	1.44E1	1.52636E-09

Using the above equation and the decay constants from Table A-2, the calculated ^{235}U (eq) concentrations are provided in Table A-3.

TABLE A-3: ^{235}U Equivalent Concentration Based on the DSA Source Term

Isotope	DSA Limits [2] (pCi/mL)	Atomic Weight [3] (g/mol)	DSA Limits (mg/L)	^{235}U (eq) [4, 5] Factors	^{235}U (eq) (mg/L)
^{233}U	1.25E+04	233.039627	1.296	1.40	1.815
^{235}U	1.25E+02	235.043922	57.819	1.00	57.819
^{239}Pu	2.66E+05	239.052156	4.284	2.25	9.639
^{241}Pu	9.31E+05	241.0568	0.009	2.25	0.0203
				Total	69.294

Note that the DSA fissile isotopic limits of Table A-3 (4th column) are greater than the 25 mg U/L and 1.68 mg Pu/L solubility limits documented for alkaline solutions in Reference 12. Using the equivalency factors in Table A-3, the maximum solubility for alkaline solutions is 28.78 mg ^{235}U(eq)/L. The excess material above these limits would have to be in the form of suspended solids. There are no known mechanisms to allow for the transfer of insoluble fissile materials in the sludge directly into the grout components in the SFT. The only mechanism known would be for the insoluble fissile materials in the sludge to enter into the solution and then the grout through the equilibrium mechanism described and evaluated in Reference 15. Therefore, the maximum concentration of fissile materials in the grout herein is limited by the maximum solubility limits of 25 mg U/L and 1.68 mg Pu/L.

These solubility limits will be used to determine the ^{235}U (eq) concentration in the accumulated grout in the SFT. For the purpose of this evaluation, the uranium is conservatively assumed to be 100% ^{235}U. The plutonium is also assumed to be 100% ^{239}Pu.

The density of dry grout mixture used in Z-Area can be determined using the following equation:

$$\frac{\text{wf}(1)}{\rho(1)} + \frac{\text{wf}(2)}{\rho(2)} + \frac{\text{wf}(3)}{\rho(3)} = \frac{1}{\rho_{mix}}$$

Given:

- Specific gravity of Portland cement: 3.15 g/cm^3 (Ref. 29)
- Specific gravity of flyash: 2.0 g/cm^3 (Ref. 30)
- Specific gravity of slag: 2.7- 3.1 g/cm^3 (3.1 is used for conservatism) (Ref. 31)

$$\frac{0.10}{3.15} + \frac{0.45}{2.0} + \frac{0.45}{3.1} = \frac{1}{\text{density of grout mixture}}$$

Solving for the grout mixture density results in 2.488 g/cm^3. Weight fraction of grout components (10 wt. % cement, 45 wt. % flyash, and 45 wt. %. Slag) are taken from Reference 15. While the estimated grout density of 2.488 g/cm^3 is higher than the nominal density of 1.68 - 1.73 g/cm^3, given in Reference 7, the higher density results in higher concentration of ^{235}U (eq) in the grout as shown below.

Dry density of grout is conservatively used for fissile material concentration calculations. Reference 15 provides the following equation for determining the fissile material concentration of a grout in a supernate solution:

$$\begin{matrix}\text{Fissile material concentration in grout} \\ \text{(mg of fissile/g of grout)}\end{matrix} =$$

$$K_d \text{ (mL of solution/g of grout)} \times \begin{matrix}\text{Supernate maximum concentration} \\ \text{(mg of fissile/mL of solution)}\end{matrix}$$

Reference 15 provides a maximum equilibrium constant, K_d, of 2.6 $\pm$ 0.5 mL solution containing uranium per gram of grout. To account for the statistical uncertainty in the K_d value, the standard deviation is multiplied by a factor of 2 to achieve a 95.4% confidence level (i.e., K_d = 2.6 + (2*0.5) = 3.6 mL solution/g of grout). Using the 25 mg/L solubility limit of uranium (conservatively assumed herein to be 100 wt. % ^{235}U) in the incoming waste salt solution and a K_d of 3.6 mL solution/g of grout for uranium system, the ^{235}U concentration in the grout is determined using the following equation:

$$\begin{matrix}{}^{235}\text{U concentration} \\ \text{in grout}\end{matrix} = \frac{\text{3.6 mL of solution}}{\text{g grout}} \times \frac{\text{25 mg of } ^{235}\text{U}}{\text{L of solution}} \times \frac{\text{1 L of solution}}{\text{1000 mL of solution}} =$$

$$\text{0.090 mg of } ^{235}\text{U/g of grout}$$

Reference 15 also provides a maximum equilibrium constant, K_d, of 9.3 $\pm$ 1.2 mL solution/g of grout for solution containing plutonium per gram of grout. To account for the statistical uncertainty in the K_d value, the standard deviation is multiplied by a factor of 2 to achieve the 95.4% confidence level (i.e., K_d = 9.3 + (2*1.2) = 11.7 mL solution/g of grout). Using the 1.68 mg/L solubility limit for plutonium (conservatively assumed herein to be 100 wt. % ^{239}Pu) in the incoming waste salt solution and a K_d of 11.7 mL solution/g of grout for plutonium system, the ^{239}Pu concentration in the grout is determined using the following equation:

$$\text{}^{239}\text{Pu concentration in grout} = \frac{11.7 \text{ mL of solution}}{\text{g grout}} \times \frac{1.68 \text{ mg of } ^{239}\text{Pu}}{\text{L of solution}} \times \frac{1 \text{ L of solution}}{1000 \text{ mL of solution}} =$$

$$0.020 \text{ mg of } ^{239}\text{Pu/g of grout}$$

The maximum ^{235}U equivalent concentration per gram of grout is calculated using the equivalency factor in Reference 5.

$$\text{}^{235}\text{U (eq) concentration in grout} = \left[\frac{0.090 \text{ mg } ^{235}\text{U}}{\text{g of grout}}\right] + \left[\frac{0.020 \text{ mg } ^{239}\text{Pu}}{\text{g of grout}} \times 2.25\right] =$$

$$0.135 \text{ mg of } ^{235}\text{U (eq)/g of grout}$$

Note that the conversion factor of 2.25 taken from Reference 5 is considered appropriate herein because, as the grout solidifies, the extremely low concentration of fissile isotopes will be immobilized within the saltstone matrix. Therefore, there are no criticality concerns in the saltstone.

The maximum equilibrium ^{235}U (eq) concentration in the grout is then calculated as follows:

$$\text{Maximum equilibrium } ^{235}\text{U (eq) concentration in grout} = \frac{0.135 \text{ mg of } ^{235}\text{U (eq)}}{\text{g grout}} \times \frac{2.488 \text{ g grout}}{1\text{cm}^3 \text{ grout}} \times \frac{1000 \text{ cm}^3 \text{ grout}}{1 \text{ L grout}} \times \frac{1 \text{ g of } ^{235}\text{U (eq)}}{1000 \text{ mg of } ^{235}\text{U (eq)}}$$

$$= \frac{0.336 \text{ g of } ^{235}\text{U (eq)}}{\text{L grout}}$$

APPENDIX B: TECHNICAL REVIEW CHECKLIST

OSR 46-574
Rev. 4
9/28/2016

LW FORM

ENGINEERING CHECKING AND VERIFICATION BY DOCUMENT REVIEW CHECKLIST

Procedure Ref. E7-2.31A and S4-ENG.51

Savannah River Site (SRS)

Page 1 of 5

Document Number: N-NCS-Z-00001 Revision: 13

Document Title: NCSE: for Z-Area (U)

The following checklist is required to be completed and attached to the document under review in compliance with Manual E7 and S4 procedures. This list should not be considered all inclusive. Add any additional notes or comments to the end of the checklist.

Item No.	Item	Yes / No N/A	Comments (use continuation page at end of form if more space is needed)
	VERSION / FORMAT		
1	If revising an existing document, are you starting with the latest, approved version of the document obtained from SmartPlant Foundation (SPF) or DCR?	N/A	
2	Are all OSR or SPF forms properly and completely filled out and is the current approved version of the form used?	Yes	Document Cover sheet
3	Does the document format include all of the sections as described in manual E7 and S4 procedures (2.31A ,3.60, etc.)?	Yes	The NCSE has all the sections required by SCD-3.
4	Are all of the pages properly labeled with Document Number, Revision Number, and Sequential Page/Sheet Number?	Yes	
5	Are the Subject and Purpose clearly stated and do they meet the end-users needs?	Yes	
	REFERENCES		
6	Are all References properly documented within the document and can they be easily verified within Document Control, on-line, or within the library, etc.? If reference documents are not readily available, are they attached?	Yes	
7	Have the correct design bases documents been identified (e.g., Codes, Standards, DOE Orders, SRR Requirements, Regulatory Requirements, DSA)?	Yes	
	OPEN ITEMS / INPUT		
8	If data is transferred from other documents, calculations or sources, is this data correct and applicable?	Yes	
9	Are all inputs found in the body of the document or calculation individually listed and if the document is a calculation, numbered in the Inputs section?	Yes	
10	Is there a reference/source for each input?	Yes	
11	Do the identified references/sources fully support the inputs and does the data meet appropriate quality assurance requirements?	Yes	
12	Have the correct operational and functional requirements of the facility been properly considered?	Yes	

OSR 46-574 Rev. 4 9/28/2016	LW FORM ENGINEERING CHECKING AND VERIFICATION BY DOCUMENT REVIEW CHECKLIST Procedure Ref. E7-2.31A and S4-ENG.51		Savannah River Site (SRS) Page 2 of 5
Item No.	**Item**	**Yes / No N/A**	**Comments** (use continuation page at end of form if more space is needed)
	OPEN ITEMS / INPUT – continued		
13	Have appropriate operational modes and worse case scenarios been considered?	Yes	
14	Are all assumptions used to support the document individually listed and numbered in the Assumptions section?	Yes	Yes in section 7
15	Is there a justification written for each assumption that includes a technical basis?	Yes	
16	Do the justifications adequately support the assumptions?	Yes	
17	If the document is a calculation and there are Open Items, has the calculation been statused as preliminary? Note: A Confirmed calculation cannot have Open Items.	N/A	
18	If the document is a preliminary calculation, have actions required to change the status from "preliminary" to "confirmed" been listed as "open items"?	N/A	
19	If the document has open items, is there a method identified to track them? List tracking numbers in Comments (STAR, POD item number, etc.).	N/A	
	ANALYTICAL METHODS AND COMPUTATIONS		
20	Are the analytical methods and computations clearly spelled out step-by-step?	Yes	
21	Is the analytical approach in use clearly described with justification along with alternative methods?	Yes	
22	Is the methodology consistent with the purpose and objective?	Yes	
23	Are mathematical derivations correct, including dimensional consistency of results?	Yes	
24	Have calculations been checked for errors as applicable per E7-2.31A, Sections 5.3.2.5 and 5.5.1? Where a calculation has multiple iterations of the same computation with numerous input and output values, the Verifier/Checker may select a representative sample of the total input and output values for review.	Yes	
25	Were the analysis inputs correctly incorporated into the analysis and are the outputs reasonable compared to the inputs?	Yes	
26	Is the Summary of Conclusion clearly stated? Does it meet the end-user's needs? Clearly state if results meet/do not meet the Objectives of the analysis?	Yes	
27	Are the numeric values consistent with the appropriate accuracy (significant figures) of the analysis?	Yes	
28	Are safety margins consistent with good engineering practice?	Yes	

OSR 46-574 Rev. 4 9/28/2016	LW FORM ENGINEERING CHECKING AND VERIFICATION BY DOCUMENT REVIEW CHECKLIST Procedure Ref. E7-2.31A and S4-ENG.51		Savannah River Site (SRS) Page 3 of 5
Item No.	**Item**	**Yes / No N/A**	**Comments** (use continuation page at end of form if more space is needed)
	SOFTWARE		
29	Is software (including spreadsheets) used? If NO, then "N/A" this section.	N/A	
30	Have computer software programs used for calculations been evaluated and properly classified for this activity using OSR form 19-337 (SWCD), per 1Q QAP 20-1 and E7-2.25? Notes: A) Engineering Calculations meeting the validation requirements of E7-2.31A, where a documented, approved process provides for verification of the results for each use are Exempt – see Row 38. B) The SWCD (software classification document) form is a site-wide application in Lotus Notes.	N/A	
31	Is computer software used for the analysis being controlled per E7-2.31A, Section 5?	N/A	
32	Were appropriate analysis methods and computer methods used?	N/A	
33	If a computer program or model is used in the calculation, is it used within the range of validity, or is use outside the range of established validity justified?	N/A	
34	Was the software program used within any restriction, criteria or test frequency requirements in the Software Quality Assurance Plan? (SQAP) (e.g., computer operating system/platform criteria, software within testing frequency).	N/A	
35	Is the software used noted on the Calculation cover sheet and referenced appropriately in the calculation?	N/A	
36	If the calculation supports the DSA, is the software and version used on the SSIL (Safety Software Inventory List) when required? Provide explanation in Comments. Notes: A) Engineering Calculations meeting the validation requirements of E7-2.31A, where a documented, approved process provides for verification of the results for each use are Exempt – see Row 38 B) The SSIL is updated on an annual basis so recently approved SQAPs may not be added to the SSIL until the next annual update.	N/A	
37	Are the equations shown in the calculation, including example functions where Excel spreadsheets or MathCad is used?	N/A	
38	If using general-purpose commercially available software as described in E7-2.31A, Section 5.5.1, then answer YES and describe checking method (5.5.1.2.C 1, 2, or 3) in Comments	N/A	
39	Have computer program error reports been checked for potential effect on the analysis?	N/A	

OSR 46-574
Rev. 4
9/28/2016

LW FORM

ENGINEERING CHECKING AND VERIFICATION BY DOCUMENT REVIEW CHECKLIST

Procedure Ref. E7-2.31A and S4-ENG.51

Savannah River Site (SRS)

Page 4 of 5

Item No.	Item	Yes / No N/A	Comments (use continuation page at end of form if more space is needed)
	RESULTS / CONCLUSIONS		
40	Are the results of the document consistent with the input and assumptions?	Yes	
41	Do the results of the document affect any other technical documents?	No	
42	Do the results substantiate the conclusion?	Yes	
	APPROVALS		
43	Does the document identify the method of verification, if applicable, and does it have a signature block for the verifier/checker?	Yes	Verification was by document review.

Checker: Herbert C. Benhardt / Herbert C Benhardt Date: 2/21/18
Print Signature

Item No. Cont.	Comment Continuation

OSR 46-574 Rev. 4 9/28/2016	LW FORM **ENGINEERING CHECKING AND VERIFICATION BY DOCUMENT REVIEW CHECKLIST** Procedure Ref. E7-2.31A and S4-ENG.51	Savannah River Site (SRS) Page 5 of 5

Items 44-56 are only to be completed when Verification by Document Review is being performed. The verifier assures the technical accuracy of the document by performing administrative and mathematical checks as appropriate, and by evaluating the document against the following questions:

Item No.	Item	Yes / No N/A	Comments (use continuation page at end of form if more space is needed)
44	Were the inputs correctly selected and identified?	Yes	
45	Are the assumptions made in the performance of the design or analytical activity adequately described and reasonable?	Yes	
46	When necessary, are the assumptions identified for subsequent re-verification when the detailed design activities are completed?	N/A	
47	Were appropriate design or analytical methods and computer programs used?	Yes	
48	Were the design or analytical inputs correctly incorporated into the design, analysis or evaluation?	Yes	
49	Have engineering actions required to support risk handling strategies been verified?	N/A	
50	Is the design output reasonable compared to the design or analytical inputs?	Yes	
51	Are the necessary design inputs for interfacing organizations specified in the design documents or in supporting procedures or instructions?	N/A	
52	Have suitable materials, parts, processes, and inspection and testing criteria been specified?	N/A	
53	Have existing and potential workplace hazards been identified, evaluated, and controls incorporated for the risk to worker injury or illness?	N/A	
54	Was a review conducted to confirm that there are no interferences with other ongoing or planned modifications?	N/A	
55	Have engineering judgments been identified, technically justified, and supported?	N/A	
56	Have design optimization strategies been considered / met (e.g., appropriate tailoring of requirements, design attributes, and operating strategies)?	N/A	

Verifier: Herbert C. Benhardt / Herbert C. Benhardt Date: 2/21/18
Print Signature

APPENDIX C: HAZARD EVALUATION TABLES

This appendix provides hazard evaluation (HE) tables generated in CHAP sessions that were completed before the contingency analysis documented in this NCSE was completed. The scenarios in Section 5 are based on the hazard events (and their factors) identified and discussed during the CHAP sessions.

Hazard Evaluation Table - Event SDI-5-001

Description	Causes	Unmitigated System Effects	Unmitigated Consequences	Preventive Features Engineered	Mitigative Features Engineered	Credited SSCs and ACs Preventers	PHR Mitigated Consequences
Fissile material concentration in SSRT due to inadvertent transfer from a high level waste tank results in a criticality	• Inadvertent transfer from a high level waste tank	None	Unmit Freq: NC (not set)	None	None	None	Mit Freq: NC (not set)
Locations • SSRT		**Methods of Detection**		**Administrative**	**Administrative**	**Mitigators**	
MAR None		None		None	None	None	
Release Mechanisms None							
Assumptions None							

Notes	References	Reminders
• Event is not credible because all tank farm waste is caustic, therefore it has low fissile solubility. • Event is not credible because any insoluble fissile material would be accompanied by poisons.	None	None

Hazard Evaluation Table - Event SDI-5-002

Description	Causes	Unmitigated System Effects	Unmitigated Consequences	Preventive Features Engineered	Mitigative Features Engineered	Credited SSCs and ACs Preventers	PHR Mitigated Consequences
Fissile material precipitation in SSRT results in a criticality **Locations** • SSRT **MAR** None **Release Mechanisms** None **Assumptions** None	• Dilution • Presence of grout • Salt solution chemistry changes • Tank 50H solids • Temperature increases	None **Methods of Detection** None	Unmit Freq: NC (not set)	None **Administrative** None	None **Administrative** None	None **Mitigators** None	Mit Freq: NC (not set)

Notes	References	Reminders
• Event is not credible because the large area in the SSRT provides areal density • WAC limit is 150x less than the subcritical concentration limit	None	None

Hazard Evaluation Table - Event SDI-5-003

Description	Causes	Unmitigated System Effects	Unmitigated Consequences	Preventive Features Engineered	Mitigative Features Engineered	Credited SSCs and ACs Preventers	PHR Mitigated Consequences
Fissile material concentration in SSRT due to evaporation results in a criticality	• Evaporation	None	Unmit Freq: NC (not set)	None	None	None	Mit Freq: NC (not set)
Locations • SSRT							
MAR None		**Methods of Detection** None		**Administrative** None	**Administrative** None	**Mitigators** None	
Release Mechanisms None							
Assumptions None							

Notes	References	Reminders
• Fires causing evaporation is not credible • WAC limit is 150x less than the subcritical concentration limit	None	None

Hazard Evaluation Table - Event SDI-5-004

Description	Causes	Unmitigated System Effects	Unmitigated Consequences	Preventive Features Engineered	Mitigative Features Engineered	Credited SSCs and ACs Preventers	PHR Mitigated Consequences
Long-Term fissile material accumulation in SSRT results in a criticality	• Fissile material accumulates in the SSRT heel	None	Unmit Freq: NC (not set)	None	None	None	Mit Freq: NC (not set)
Locations • SSRT							
MAR None		**Methods of Detection** None		**Administrative** None	**Administrative** None	**Mitigators** None	
Release Mechanisms None							
Assumptions None							

Notes	References	Reminders
• Event is not credible because the large area in the SSRT provides areal density • Event is not credible due to the 0.2 gallon heel • SSRT is agitated during processing	None	None

Hazard Evaluation Table - Event SDI-5-005

Description	Causes	Unmitigated System Effects	Unmitigated Consequences	Preventive Features Engineered	Mitigative Features Engineered	Credited SSCs and ACs Preventers	PHR Mitigated Consequences
Concentration of fissile material in SSRT due to intended transfers from Tank 50H results in a criticality	• Normal Operation	None	Unmit Freq: NC (not set)	None	None	None	Mit Freq: NC (not set)

Locations	MAR	Methods of Detection	Administrative	Administrative	Mitigators
• SSRT	None	None	None	None	None

Release Mechanisms	Assumptions
None	None

Notes	References	Reminders
• WAC limit is 150x less than the subcritical concentration limit	None	None

Hazard Evaluation Table - Event SDI-5-006

Description	Causes	Unmitigated System Effects	Unmitigated Consequences	Preventive Features Engineered	Mitigative Features Engineered	Credited SSCs and ACs Preventers	PHR Mitigated Consequences
Fissile material concentration/accumulation in the grout mixer results in a criticality	• Normal Operation	None	Unmit Freq: NC (not set)	None	None	None	Mit Freq: NC (not set)
Locations • Mixer		**Methods of Detection**		**Administrative**	**Administrative**	**Mitigators**	
MAR None		None		None	None	None	
Release Mechanisms None							
Assumptions None							

Notes	References	Reminders
• Small volume of grout mixer such that greater than a subcritical mass cannot be accumulated • WAC limit is 150x less than the subcritical concentration limit	None	None

Hazard Evaluation Table - Event SDI-5-007

Description	Causes	Unmitigated System Effects	Unmitigated Consequences	Preventive Features Engineered	Mitigative Features Engineered	Credited SSCs and ACs Preventers	PHR Mitigated Consequences
Fissile material accumulation in the grout hopper results in a criticality **Locations** • Grout Hopper **MAR** None **Release Mechanisms** None **Assumptions** None	• Normal Operation	None **Methods of Detection** None	Unmit Freq: NC (not set)	None **Administrative** None	None **Administrative** None	None **Mitigators** None	Mit Freq: NC (not set)

Notes	References	Reminders
• Small volume of grout hopper such that greater than a subcritical mass cannot be accumulated • WAC limit is 150x less than the subcritical concentration limit	None	None

Hazard Evaluation Table - Event SDI-5-008

Description	Causes	Unmitigated System Effects	Unmitigated Consequences	Preventive Features Engineered	Mitigative Features Engineered	Credited SSCs and ACs Preventers	PHR Mitigated Consequences
Fissile material precipitation in CCBT due to an inadvertent transfer from SSRT results in a criticality	• Misalignment of valves results in fissile material sent to the CCBT	None	Unmit Freq: NC (not set)	None	None	None	Mit Freq: NC (not set)
Locations • CCBT		**Methods of Detection**		**Administrative**	**Administrative**	**Mitigators**	
MAR None		None		None	None	None	
Release Mechanisms None							
Assumptions None							

Notes	References	Reminders
• WAC limit is 150x less than the subcritical concentration limit	None	• add other notes from PCHA

Hazard Evaluation Table - Event SDI-5-009

Description	Causes	Unmitigated System Effects	Unmitigated Consequences	Preventive Features Engineered	Mitigative Features Engineered	Credited SSCs and ACs Preventers	PHR Mitigated Consequences
Fissile material precipitation in Process Water Tank due to an inadvertent transfer from SSRT results in a criticality	• Misalignment of valves results in fissile material sent to the PW Tank	None	Unmit Freq: NC (not set)	None	None	None	Mit Freq: NC (not set)
Locations • Process Water Tank							
MAR None		**Methods of Detection** None		**Administrative** None	**Administrative** None	**Mitigators** None	
Release Mechanisms None							
Assumptions None							

Notes	References	Reminders
• WAC limit is 150x less than the subcritical concentration limit	None	• compare to PCHA

Hazard Evaluation Table - Event SDI-5-010

Description	Causes	Unmitigated System Effects	Unmitigated Consequences	Preventive Features Engineered	Mitigative Features Engineered	Credited SSCs and ACs Preventers	PHR Mitigated Consequences
Fissile material accumulation in SHOC results in a criticality **Locations** • SHOC **MAR** None **Release Mechanisms** None **Assumptions** None	• Normal Operation	None **Methods of Detection** None	Unmit Freq: NC (not set)	None **Administrative** None	None **Administrative** None	None **Mitigators** None	Mit Freq: NC (not set)

Notes	References	Reminders
• Processing will be stopped until the SHOC can be emptied or replaced, thus preventing accumulation of fissile material • Small volume of SHOC such that greater than a subcritical mass cannot be accumulated • WAC limit is 150x less than the subcritical concentration limit	None	None

Hazard Evaluation Table - Event SDI-5-011

Description	Causes	Unmitigated System Effects	Unmitigated Consequences	Preventive Features Engineered	Mitigative Features Engineered	Credited SSCs and ACs Preventers	PHR Mitigated Consequences
Fissile material concentration in the SSRT due to the Solvent from MCU results in a criticality	• Inadvertent transfer of Solvent via Tank 50H	None	Unmit Freq: NC (not set)	None	None	None	Mit Freq: NC (not set)
Locations • SSRT		**Methods of Detection**		**Administrative**	**Administrative**	**Mitigators**	
MAR None		None		None	None	None	
Release Mechanisms None							
Assumptions None							

Notes	References	Reminders
• Chemistry argument from N-NCS-H-00192 is valid.	None	None

Hazard Evaluation Table - Event SDI-5-012

Description	Causes	Unmitigated System Effects	Unmitigated Consequences	Preventive Features Engineered	Mitigative Features Engineered	Credited SSCs and ACs Preventers	PHR Mitigated Consequences
Fissile material precipitation in SSRT due to inadvertent transfer of acid from MCU results in a criticality	• Inadvertent transfer of acid via Tank 50H	None	Unmit Freq: NC (not set)	None	None	None	Mit Freq: NC (not set)
Locations • SSRT		**Methods of Detection**		**Administrative**	**Administrative**	**Mitigators**	
MAR None		None		None	None	None	
Release Mechanisms None							
Assumptions None							

Notes	References	Reminders
• Acid would not result in significant precipitation • No direct path from MCU to SSRTs • Tank 50H would neutralize acid	None	None

Hazard Evaluation Table - Event SDI-5-013

Description	Causes	Unmitigated System Effects	Unmitigated Consequences	Preventive Features Engineered	Mitigative Features Engineered	Credited SSCs and ACs Preventers	PHR Mitigated Consequences
Fissile material precipitation/accumulation in SSRT and grout mixer due to Q2 and Daratard 17 additions results in a criticality	• Admix causes precipitation in grout mixer • Backflow of Admix through SSRT discharge pipe causes precipitation in SSRT	None	Unmit Freq: NC (not set)	None	None	None	Mit Freq: NC (not set)

Locations

- Mixer
- SSRT

MAR

None

Release Mechanisms

None

Assumptions

None

Methods of Detection

None

Administrative

None

Administrative

None

Mitigators

None

Notes

- 600 gallons of Admix
- Admix does not significantly change the salt chemistry, thus not causing precipitation
- Event is not credible because the large area in the SSRT provides areal density
- Small volume of grout mixer such that greater than a subcritical mass cannot be accumulated

References

None

Reminders

None

Hazard Evaluation Table - Event SDI-5-014

Description	Causes	Unmitigated System Effects	Unmitigated Consequences	Preventive Features Engineered	Mitigative Features Engineered	Credited SSCs and ACs Preventers	PHR Mitigated Consequences
Fissile material accumulation/concentration in SDUs results in a criticality	• Normal Operation	None	Unmit Freq: NC (not set)	None	None	None	Mit Freq: NC (not set)
Locations • SDU		**Methods of Detection**		**Administrative**	**Administrative**	**Mitigators**	
MAR None		None		None	None	None	
Release Mechanisms None							
Assumptions None							

Notes	References	Reminders
• Grouting process does not preferentially collect fissile material	None	None

Hazard Evaluation Table - Event SDI-5-015

Description	Causes	Unmitigated System Effects	Unmitigated Consequences	Preventive Features Engineered	Mitigative Features Engineered	Credited SSCs and ACs Preventers	PHR Mitigated Consequences
Grout hydration reactions results in a criticality **Locations** • SDU **MAR** None **Release Mechanisms** None **Assumptions** None	• Normal Operation	None **Methods of Detection** None	Unmit Freq: NC (not set)	None **Administrative** None	None **Administrative** None	None **Mitigators** None	Mit Freq: NC (not set)

Notes	References	Reminders
• WAC limit is 150x less than the subcritical concentration limit • WSRC-RP-92-1360 states: grout hydration increases fissile concentration by 1.22	None	None

Hazard Evaluation Table - Event SDI-5-016

Description	Causes	Unmitigated System Effects	Unmitigated Consequences	Preventive Features Engineered	Mitigative Features Engineered	Credited SSCs and ACs Preventers	PHR Mitigated Consequences
Fissile material concentration in SSRT sump due to large spill results in a criticality **Locations** • SSRT Dike **MAR** None **Release Mechanisms** None **Assumptions** None	• Large spill of salt solution into SSRT Dike cause accumulation of fissile material in the sump	None **Methods of Detection** None	Unmit Freq: NC (not set)	None **Administrative** None	None **Administrative** None	None **Mitigators** None	Mit Freq: NC (not set)

Notes	References	Reminders
• Event is not credible because the large area in the SSRT D ke provides areal density • Large leaks would be detected and not be allowed to evaporate • Small volume of sump such that greater than a subcritical mass cannot be accumulated • WAC limit is 150x less than the subcritical concentration limit	None	None

Hazard Evaluation Table - Event SDI-5-017

Description	Causes	Unmitigated System Effects	Unmitigated Consequences	Preventive Features Engineered	Mitigative Features Engineered	Credited SSCs and ACs Preventers	PHR Mitigated Consequences
Long-term fissile material accumulation in SSRT sump results in a criticality **Locations** • SSRT Dike **MAR** None **Release Mechanisms** None **Assumptions** None	• Small undetected spills over time accumulate fissile material in the sump	None **Methods of Detection** None	Unmit Freq: NC (not set)	None **Administrative** None	None **Administrative** None	None **Mitigators** None	Mit Freq: NC (not set)

Notes	References	Reminders
• Event is not credible because the large area in the SSRT sump provides areal density requiring non-credible volume of small leaks (over ~25,000 gallons required to accumulate) • WAC limit is 150x less than the subcritical concentration limit	None	None

Hazard Evaluation Table - Event SDI-5-018

Description	Causes	Unmitigated System Effects	Unmitigated Consequences	Preventive Features Engineered	Mitigative Features Engineered	Credited SSCs and ACs Preventers	PHR Mitigated Consequences
Fissile material concentration in process room sump/trench due to large spill results in a criticality	• Large spill of salt solution into process room causes accumulation of fissile material in the sump/trench	None	Unmit Freq: NC (not set)	None	None	None	Mit Freq: NC (not set)
Locations • 210-Z Process Room							
MAR None		**Methods of Detection** None		**Administrative** None	**Administrative** None	**Mitigators** None	
Release Mechanisms None							
Assumptions None							

Notes	References	Reminders
• Event is not credible because the large area in the process room floor provides areal density • Small volume of sump/trench such that greater than a subcritical mass cannot be accumulated • WAC limit is 150x less than the subcritical concentration limit	None	None

Hazard Evaluation Table - Event SDI-5-019

Description	Causes	Unmitigated System Effects	Unmitigated Consequences	Preventive Features Engineered	Mitigative Features Engineered	Credited SSCs and ACs Preventers	PHR Mitigated Consequences
Long-term fissile material accumulation in CCBT d ke results in a criticality **Locations** • CCBT Dike **MAR** None **Release Mechanisms** None **Assumptions** None	• Small undetected spills over time accumulate fissile material in the sump	None **Methods of Detection** None	Unmit Freq: NC (not set)	None **Administrative** None	None **Administrative** None	None **Mitigators** None	Mit Freq: NC (not set)

Notes	References	Reminders
• Event is not credible because the large area in the CCBT Dike provides areal density • Event is not credible because the large area in the CCBT sump provides areal density requiring non-credible volume of small leaks • Small volume of sump such that greater than a subcritical mass cannot be accumulated • WAC limit is 150x less than the subcritical concentration limit	None	None

Hazard Evaluation Table - Event SDI-5-020

Description	Causes	Unmitigated System Effects	Unmitigated Consequences	Preventive Features Engineered	Mitigative Features Engineered	Credited SSCs and ACs Preventers	PHR Mitigated Consequences
Long-term fissile material accumulation in SFT dike results in a criticality **Locations** • SFT D ke **MAR** None **Release Mechanisms** None **Assumptions** None	• Small undetected spills over time accumulate fissile material in the sump	None **Methods of Detection** None	Unmit Freq: NC (not set)	None **Administrative** None	None **Administrative** None	None **Mitigators** None	Mit Freq: NC (not set)

Notes	References	Reminders
• Event is not credible because the large area in the SFT Dike provides areal density • Event is not credible because the large area in the SFT sump provides areal density requiring non-credible volume of small leaks • Small volume of sump such that greater than a subcritical mass cannot be accumulated • WAC limit is 150x less than the subcritical concentration limit	None	None

Hazard Evaluation Table - Event SDI-5-021

Description	Causes	Unmitigated System Effects	Unmitigated Consequences	Preventive Features Engineered	Mitigative Features Engineered	Credited SSCs and ACs Preventers	PHR Mitigated Consequences
Freezing of SSRT results in a criticality	• Freezing conditions	None	Unmit Freq: NC (not set)	None	None	None	Mit Freq: NC (not set)
Locations • SSRT							
MAR None		**Methods of Detection** None		**Administrative** None	**Administrative** None	**Mitigators** None	
Release Mechanisms None							
Assumptions None							

Notes	References	Reminders
• Event is not credible because the large area in the SSRT provides areal density • WAC limit is 150x less than the subcritical concentration limit	None	None

Hazard Evaluation Table - Event SDI-5-022

Description	Causes	Unmitigated System Effects	Unmitigated Consequences	Preventive Features Engineered	Mitigative Features Engineered	Credited SSCs and ACs Preventers	PHR Mitigated Consequences
Inadvertent transfer from SWPF into the SSRT results in a criticality **Locations** • SSRT **MAR** None **Release Mechanisms** None **Assumptions** None	• Inadvertent transfer from SWPF	None **Methods of Detection** None	Unmit Freq: NC (not set)	None **Administrative** None	None **Administrative** None	None **Mitigators** None	Mit Freq: NC (not set)

Notes	References	Reminders
• 43,600 gallons transferred • Chemistry argument from current SWPF NCSE (Ref. 20) is valid for Saltstone.	None	None