SALTSTONE FACILITY

DOCUMENTED SAFETY ANALYSIS

Revision 15

July 2018

DISCLAIMER

This document was prepared by AECOM N&E Technical Services LLC (N&E TS) under contract with Savannah River Remediation LLC (SRR), subject to the warranty and other obligations of that contract and in furtherance of SRR's contract with the United States Department of Energy (DOE). N&E TS' findings represent its reasonable judgments within the time and budget context of its commission and utilizing the information available to it at the time. This document was prepared solely for the DOE for Contract DE-AC09-09SR22505.

Release to and Use by Third Parties. As it pertains to releases of this document to third parties, and the use of or reference to this document by such third parties in whole or in part, neither N&E TS, SRR, DOE, nor their respective officers, directors, employees, agents, consultants, or personal services contractors (i) make any warranty, expressed or implied, (ii) assume any legal liability or responsibility for the accuracy, completeness, or usefulness, of any information, apparatus, product or process disclosed herein or (iii) represent that use of the same will not infringe privately owned rights. Reference herein to any specific commercial product, process, or service by trademark, name, manufacture or otherwise, does not necessarily constitute or imply endorsement, recommendation, or favoring of the same by N&E TS, SRR, DOE, or their respective officers, directors, employees, agents, consultants or personal services contractors. The views and opinions of the authors expressed herein do not necessarily state or reflect those of the United States Government or any agency thereof.

CHAPTER TABLE OF CONTENTS

REVISION LOG

ACRONYMS AND ABBREVIATIONS

EXECUTIVE SUMMARY

CHAPTER 1 SITE CHARACTERISTICS

CHAPTER 2 FACILITY DESCRIPTION

CHAPTER 3 HAZARD AND ACCIDENT ANALYSES

CHAPTER 4 SAFETY STRUCTURES, SYSTEMS, AND COMPONENTS

CHAPTER 5 DERIVATION OF TECHNICAL SAFETY REQUIREMENTS

CHAPTER 6 PREVENTION OF INADVERTENT CRITICALITY

CHAPTER 7 RADIOLOGICAL PROTECTION

CHAPTER 8 HAZARDOUS MATERIAL PROTECTION

CHAPTER 9 RADIOACTIVE AND HAZARDOUS WASTE MANAGEMENT

CHAPTER 10 INITIAL TESTING, IN-SERVICE SURVEILLANCE, AND MAINTENANCE

CHAPTER 11 OPERATIONAL SAFETY

CHAPTER 12 PROCEDURES AND TRAINING

CHAPTER 13 HUMAN FACTORS

CHAPTER 14 QUALITY ASSURANCE

CHAPTER 15 EMERGENCY PREPAREDNESS PROGRAM

CHAPTER 16 PROVISIONS FOR DECONTAMINATION AND DECOMMISSIONING

CHAPTER 17 MANAGEMENT, ORGANIZATION, AND INSTITUTIONAL SAFETY PROVISIONS

SALTSTONE FACILITY

DOCUMENTED SAFETY ANALYSIS

REVISION STATUS

CHAPTER	REVISION	DATE
ES	15	July 2018
1	14	December 2017
2	15	July 2018
3	15	July 2018
4	15	July 2018
5	15	July 2018
6	15	July 2018
7	13	July 2016
8	12	November 2015
9	13	July 2016
10	15	July 2018
11	15	July 2018
12	14	December 2017
13	15	July 2018
14	14	December 2017
15	12	November 2015
16	14	December 2017
17	15	July 2018

REVISION LOG

Rev.	Date	Chapters Affected	Description of Changes
0	4/03	All Chapters	Initial Issue. (Never Implemented)
1	8/03	All Chapters	Revised to allow processing Low Curie Salt Solution. Removed Salt Solution Hold Tank. Added Inadvertent Transfer from Tank 50H AC Program. Changed bounding accident from fire to explosion in SFT.
2	11/04	All Chapters	Changed source term concentrations to allow receipt of low level waste with greater concentrations of chemicals and radionuclides than previously evaluated. Incorporated new consequences from resulting revised accident analysis. Deleted Controls and Remarks from Table 3.6-9. Updated references.
3	8/05	All Chapters	Added modifications due to facility upgrades to process 0.2 Ci/gal (Cs-137) Low Activity Saltstone Waste and resulting new analysis. Addressed concerns identified in PISA: PI-04-0008 regarding flammable vapor accumulation in the Saltstone Vaults.
4	7/06	All Chapters	This annual revision includes CRF 06001 and incorporation of Specific Administrative Controls.
5	7/07	All Chapters	This annual revision includes reformatting TSR derivations, clarifications of Vault 4 cell Leachate Collection and Return System liquid volume, the Vault 4 cell vent description and other general document text changes.
6	10/08	All Chapters	This annual revision includes the incorporation of SF-CRF-080001 and SF-CRF-070001 as well as changes to allow for the processing of salt solution containing low levels of organics from the MCU process.

(continued)

REVISION LOG (continued)

Rev.	Date	Chapters Affected	Description of Changes
7	08/09	All Chapters	This revision of the DSA includes the incorporation of SBD-CRF-Z-09001, SBD-CRF-Z-09002, and SBD-CRF-Z-09003 as well as incorporated the receipt of MCU waste containing full organics to Saltstone. This included the expansion of the DSA for a HC-2 facility and identification of credited SS controls. This revision served as the 2009 annual update. Revision bars are included in Chapters ES-5. Chapters 6-17 do not contain revision bars as these are all new chapters and represent a complete revision.
8	07/11	All Chapters	This revision of the DSA includes the incorporation of SBD-CRF-Z-10003 Rev. 0, SBD-CRF-Z-10005 Rev. 0, SBD-CRF-Z-10006 Rev. 1, SBD-CRF-Z-10008 Rev. 1, and SBD-CRF-Z-11001, Rev. 1 as well as changes to allow for the processing of salt solution containing high levels of organics in Saltstone Disposal Unit 2.
9	08/12	Chapters ES, 1, 2, 3, 4, 5, 6, 10, 11, 12, 13, 15.	This revision of the DSA includes the incorporation of SBD-CRF-Z-11002 Rev. 1, SBD-CRF-Z-11003 Rev. 2, SBD-CRF-Z-12002 Rev. 1, SBD-CRF-Z-12005 Rev. 1, and SBD-CRF-Z-12008 Rev. 0. Incorporated Chapter 3 WDED-12-12 Revision Issues. Revised Chapter 3 to allow SDU 4 daily pours. Added dispersion methodology references to Chapter 3, Nuclear Criticality Safety Program to Chapter 5, Nuclear Maintenance Management Program reference to Chapter 10. Revised Chapter 15 to be consistent with the EPHA. Applied reference updates and minor edits as appropriate.

(continued)

REVISION LOG (continued)

Rev.	Date	Chapters Affected	Description of Changes
10	02/13	Chapters ES, 1, 2, 3, 4, 5, 9, 11, 13, 15.	This revision of the DSA includes the incorporation of SDU 3 & 5, SBD-CRF-Z-12007 Rev. 1, SBD-CRF-Z-12009 Rev. 1, SBD-CRF-Z-12011 Rev. 0, SBD-CRF-Z-13001 Rev. 0, Revision Issue Saltstone-6-R1 [Removal of Mode 2 thru 5 operation ("High Organics")], Saltstone-6-R3 (inclusion of EPHA revision number in Chapter 15, and Saltstone-6-R4 (removal of molecular diffusion verbiage). Reinstated the SFT explosion as the DBA. The SDU explosion is now the BDBA.
11	07/14	All Chapters	This revision serves as the 2014 Annual Update. It includes the incorporation of SBD-CRF-Z-13002, Rev. 1 (Addition of SDU Humidity Sensor), SBD-CRF-Z-13005, Rev. 1 (Inclusion of Next Generation Solvent), SBD-CRF-Z-13006, Rev. 1 (Replace SDU #2/SDU#4 Grout Line Diverter Valve with Spool Pieces), SBD-CRF-Z-13007, Rev. 0 (Revise SDU #3 & #5 Portable Ventilation and SDU Camera), SBD-CRF-Z-13008, Rev. 0 (Raise SDU 2, 3, and 5 Grout Height Fill Limit), and SBD-CRF-Z-14001, Rev. 0 (Incorporate Changes to the Clean Capping Process for SDU 4). In Chapter 3, reformatted the content consistent with DOE-STD-3009-94 guidance. Chapter 4 now provides the SAC Evaluation for SDU 4 Cell Fill Height with the SAC presented in Directive Action SAC format in the TSRs. Chapter 5 provides the derivation of the SDU 4 Cell Fill Height SAC. Chapter 5 provides a clarification of the Interface Requirements between Saltstone and CSTF related to material transfers. NPH accidents have been incorporated into the Interface Requirements including derivation of the associated SAC requirement. Nuclear Criticality Safety Evaluation (N-NCS-Z-00001, Rev. 12) discussion has been moved from Chapter 3 to Chapter 6. Applied reference updates and minor edits as appropriate. Applied formatting corrections throughout for consistency.

(continued)

REVISION LOG (continued)

Rev.	Date	Chapters Affected	Description of Changes
12	11/15	Chapters ES, 1, 2, 3, 4, 5, 6, 7, 8, 9, 10, 11, 12, 13, 15, 17	This revision serves as the 2015 Annual Update. It includes the incorporation of SBD-CRF-Z-15002 (SDU Cell Core Sampling), SBD-CRF-Z-15004 (Removal of SDU 2&4 Ventilation Skids), SBD-CRF-Z-15005 (Analytical Uncertainty), speciation of mercury, and the incorporation of the SSRTs. Revised Low/Full/High Organics Operation to Low/High Isopar® L Operation. Updated acronyms and abbreviations list. Replaced “pipeline” with "Inter-area transfer line," "grout transfer line," as applicable. Applied minor edits for consistency (e.g., acronym and abbreviation additions, Title Case/lower case, indefinite articles, plural/singular, acronym first use, reference ties). Replaced “Wackenhut” with “security contractor”. Revised Chapter 1 and 8 with current GSAR (SRNS-IM-2013-00019). In Chapter 2, 1) Deleted Admixture Chemical Station, 2) Replaced “dike” with “enclosure” where appropriate which more accurately depicts these structures, 3) Clarified SHOC verbiage, 4) Modified Leachate Collection System, and 5) Added single HEPA housing requirement to SDU 4 Cells C and I. In Chapter 3, clarified flammability of dry feeds, revised SDU 2-type dust term, included TEDE for fire scenarios, and updated Chemical Concentration Table 3.6-7. Additionally, 5% margin for additional flammables has been built in to the flammability model. In Chapter 4, modified passive vent description, revised 25% key chemical verbiage. In Chapter 5, 1) Added Conduct of Operations Program, and 2) Revised “Preventive Maintenance Program” to Nuclear Maintenance Management Program”. In Chapter 7, removed the curie value used in accident analysis (2013-CTS-008154 refers).

(continued)

REVISION LOG (continued)

Rev.	Date	Chapters Affected	Description of Changes
13	07/16	Chapters ES, 1, 2, 3, 4, 5, 6, 7, 9, 11, 13	This revision serves as the 2016 Annual Update and incorporates SDU 6. Verified consistent use of the terms “secure/shut down/stop”. Updated “grout production” to “grout production operation.” Revised Executive Summary to include future use of SWPF. Revised earthquake and tornado text in Chapter 1. Revised Chapter 2 to delete SDU 4 flammability monitoring system, updated Building 951-Z description, changed the composition of pig, added “or obtain approval of the deviation” to the WAC description, added additional information for the Radiological Monitoring System, and minor editorial changes. Revised Chapter 3 to include the DMHg formation rate as a contributor to flammability. Modified Table 3.6-7 (organic compounds). Revised Chapter 4 to clarify the safety function of the SDU SSCs and modify the verification requirements of SDU 4 clean cap mixer trucks. Revised Chapter 5 to modify overtime guidelines, and update the SDU 2, 3, and 5 fill height SAC with additional information about instrument accuracy for the flow instrumentation. Removed modes from Section 5.5.4, minimum shift crew. Revised Chapter 7 to modify examples to limit worker exposure to radiation. Revised Chapter 9 to update the solid waste volume. Applied reference updates. Changes associated with SDU 6 include Chapters ES through 5, 9, 11, and 13.

REVISION LOG (continued)

Rev.	Date	Chapters Affected	Description of Changes
14	11/17	Chapters ES, 1, 2, 3, 4, 5, 6, 11, 12, 13, 14, 16	This revision serves as the 2017 Annual Update. Updated Organization Section of the Executive Summary. Revised Chapter 2 - Revised SHOC volume verbiage. Revised Chapter 3 - Updated Fire Protection Section, updated consequence methodology for calculating TED, updated hydrogen generation methodology, updated DBA scenarios and consequences, updated Past Operating History, replaced Table 3.6-6, updated Table 3.6-7. Revised Chapter 4 – Revised Inhalation Dose Potential, updated LCO 3.1.3 to new fill heights, updated the SDU 6 maximum grout height. Revised Chapter 5 - to remove specific frequencies of SDU 6 activities when the grout height limit is exceeded (TSR specifies these details), updated LCO 3.1.3 to new fill heights, updated SDU 6 Maximum Grout Height, updated references. Revised Chapter 11 - revised Conduct of Operations and Fire Protection verbiage, updated references. Revised Chapter 12 - updated references, editorial change. Revised Chapters 6, 13, 14, and 16 – updated references.

REVISION LOG (continued)

Rev.	Date	Chapters Affected	Description of Changes
15	07/18	2, 3, 4, 5, 6, 10, 11, 13, 17	This revision serves as the 2018 Annual Update. Executive Summary – Removed "LCO". Added "Project Manager" for consistency with "Deputy Project Manager". Chapter 2 – Updated operating states of SDUs 2, 4, and 5. Updated leachate piping configuration. Revised Drainwater Collection and Return System. Removed "wide spot" as it refers to "surge volume". Removed SDU 4 Clean Cap subsection. Revised SDU Portable Ventilation System configuration. Updated references. Chapter 3 – Corrected Table 3.6-6 title and HGR reference. Updated operating states of SDUs 2, 4, and 5. Added Prohibited Operations Program in initial conditions. Revised MACCS description. Consolidated the Chemical Source Term Calculation description. Revised acronym-first use for Level of Control. Revised CW consequence for tornado/high wind. Updated BDBA description. Updated references. Chapter 4 – Applied minor edits. Updated operating states of SDUs 2, 4, and 5. Removed LCO 3.1.3. Clarified Section 4.4.1, SDU Cell Passive Vents. Added acronym for 2 Sigma. Changed Section 4.5.2 to SDU 3 Cell Fill Height (directive action) SAC. Clarified SAV and grout height indicators use in Sections 4.5.2 and 4.5.6. Deleted Section 4.5.4, SDU 4 Cell Fill Height SAC. Added Section 4.5.8, Prohibited Operations Program SAC. Updated references. Chapter 5 – Added acronym for 2 Sigma. Removed Sections 5.4 and 5.5.1 (Modes and Flammability LCOs). Deleted Section 5.5.2.9, SDU 4 Cell Fill Height SAC. Updated operating states of SDUs 2, 4, and 5. Modified Section 5.5.2.16 to clarify SAV and specify timeframe for initiation of grout pouring. Clarified Engineering Evaluation. Added Sections 5.5.2.17, SDU 3 Cell Fill Height SAC and 5.5.2.18, Prohibited Operations Program SAC. Added functionality of equipment in Section 5.7.2.3, Material Balance Discrepancies SAC. Revised references. Chapter 6 – Revised reference. Chapter 10 – Removed Procedure Manual 5E. Chapter 11 – Incorporated SRR Fire Protection Program Document F-PRP-G-00001. Chapter 13 – Removed SDUs 2 and 5. Removed SDU 4 Clean Cap discussion. Chapter 17 – Updated Management Organization.

ACRONYMS AND ABBREVIATIONS

AC	Administrative Control
ALAP	As Low As Practicable
ACP	XIAMETER® ACP-3183 Antifoam Compound
ALARA	As Low As Reasonably Achievable
AMAD	Activity Median Aerodynamic Diameter
ANS	American Nuclear Society
ANSI	American National Standards Institute
ARF	Airborne Release Fraction
ARM	Area Radiation Monitor
ASME	American Society of Mechanical Engineers
BDBA	Beyond Design Basis Accident
BEU	Beyond Extremely Unlikely
BOP	Balance of Plant
CBO	Carbon Burn Out
CCBT	Clean Cap Batch Tank
CCR	Central Control Room
CCTV	Closed Circuit Television
CFR	Code of Federal Regulations
CHA	Consolidated Hazard Analysis
CHAP	Consolidated Hazard Analysis Process
Ci	Curie
CLFL	Composite Lower Flammability Limit
CM	Configuration Management
CMM	Chemical Mixture Methodology
CRO	Control Room Operator
CSP	Criticality Safety Program
CSSX	Caustic Side Solvent Extraction
CSTF	Concentration, Storage, and Transfer Facilities
CW	Collocated Worker
D&D	Decontamination and Decommissioning
DBA	Design Basis Accident
DCF	Dose Conversion Factor
DCS	Distributed Control System
DDA	Deliquification, Dissolution, and Adjustment

ACRONYMS AND ABBREVIATIONS (continued)

DF	Design Feature
DID	Defense in Depth
DMHg	Dimethyl Mercury
DOE	Department of Energy
DOT	Department of Transportation
DR	Damage Ratio
DSA	Documented Safety Analysis
DSS	Decontaminated Salt Solution
DSSHT	Decontaminated Salt Solution Hold Tank
DWPF	Defense Waste Processing Facility
ECR	Electrical Control Room
EGs	Evaluation Guidelines
EIS	Environmental Impact Statement
ESH&QA	Environmental, Safety, Health, and Quality Assurance
ETP	Effluent Treatment Project (formerly known as the Effluent Treatment Facility)
FMF	Fuel Material Facility
FOSC	Facility Operations Safety Committee
FW	Facility Worker
gal	gallon
gpm	gallons per minute
HA	Hazard Analysis
HAZCOM	Hazard Communication
HAZOP	Hazard and Operability
HC	Hazard Category
HDBK	Handbook
HDPE	high-density polyethylene
HF	Human Factors
HFE	Human Factors Engineering
HGR	Hydrogen Generation Rate
HEPA	High Efficiency Particulate Air
HLW	High Level Waste
HSI	Human-System Interface
HVAC	Heating, Ventilation, and Air Conditioning
I/O	Input/Output
ICRP	International Commission on Radiological Protection

ACRONYMS AND ABBREVIATIONS (continued)

IEEE	Institute of Electrical and Electronics Engineers
IG	Interim Guidance
IH	Industrial Hygiene
IPI	Installed Process Instrumentation
ISI	In-Service Inspection
ITS	Important-to-Safety
IW	Inhibited Water
km	kilometer
KTPB	Potassium Tetraphenylborate
kV	kilovolt
L	Liter
LFL	Lower Flammability Limit
LLW	Low Level Waste
LOC	Level of Control
LPF	Leak Path Factor
LW	Liquid Waste
m	meter
M&O	Management and Operations
M&TE	Measuring and Test Equipment
MACCS	MELCOR Accident Consequence Code System
MACCS2	MELCOR Accident Consequence Code System 2
MAR	Material at Risk
MCC	Motor Control Center
MCU	Modular Caustic Side Solvent Extraction Unit
mg	milligrams
MP	Management Policy
MOI	Maximally Exposed Offsite Individual
MSDS	Material Safety Data Sheet
NaOH	Sodium Hydroxide
NCS	Nuclear Criticality Safety
NCSE	Nuclear Criticality Safety Evaluation
NESHAP	National Emissions Standards for Hazardous Air Pollutants
NFPA	National Fire Protection Association
NGS	Next Generation Solvent
NMMP	Nuclear Maintenance Management Program
NO_2	Nitrite

ACRONYMS AND ABBREVIATIONS (continued)

NO_3	Nitrate
NPH	Natural Phenomena Hazard
ORR	Operational Readiness Review
OSHA	Occupational Safety and Health Administration
PAC	Protective Action Criteria
PC	Performance Category
PDF	Particle Deposition Factor
PEL-TWA	Permissible Exposure Limit – Time Weighted Average
PLC	Programmable Logic Controller
ppm	parts per million
PVVS	Process Vessel Ventilation System
PS	Production Support
PW	Process Water
Q2	Dow Corning® Antifoam Q2-3183A
QA	Quality Assurance
QAP	Quality Assurance Program
RBA	Radiological Buffer Area
RCI	Radiological Control Inspector
RCO	Radiological Control Operations
RF	Respirable Fraction
RPS	Radiological Protection Services
RW	Radiological Worker
RWT	Radiological Worker Training
S/RID	Standards/Requirements Identification Document
SAC	Specific Administrative Control
SAV	Safety Analysis Value
SB	Safety Basis
SC	Safety Class
SCDHEC	South Carolina Department of Health and Environmental Control
SCPD	Site Characteristics and Program Descriptions
SDF	Saltstone Disposal Facility
SDU	Saltstone Disposal Unit
SFT	Salt Feed Tank
SHOC	Saltstone Hopper Overflow Container
SHT	Saltstone Hold Tank

ACRONYMS AND ABBREVIATIONS (continued)

SIH	Standard Industrial Hazard
SIRIM	Site Item Reportability and Issue Management
SOF	Sum of Fractions
SPCS	Saltstone Process Control System
SPF	Saltstone Production Facility
SRNL	Savannah River National Laboratory
SRR	Savannah River Remediation
SRS	Savannah River Site
SRSOC	SRS Operations Center
SS	Safety Significant
SSCs	Structures, Systems, and Components
SSRT	Salt Solution Receipt Tank
ST	Source Term
STD	Standard
SWPF	Salt Waste Processing Facility
TBP	Tributylphosphate
TED	Total Effective Dose
TNT	Trinitrotoluene
TOA	Trioctylamine
TOC	Total Organic Carbon
TPB	Tetraphenylborate
TQ	Threshold Quantity
TRU	Transuranic
TSR	Technical Safety Requirement
UPS	Uninterruptible Power Supply
USQ	Unreviewed Safety Question
V	Volt
vol%	volume percent
WAC	Waste Acceptance Criteria
WCP	Waste Compliance Plan
WSRC	Washington Savannah River Company
wt%	weight percent
χ/Q	Dispersion Factor

SALTSTONE FACILITY

DOCUMENTED SAFETY ANALYSIS

EXECUTIVE SUMMARY

Revision 15

July 2018

TABLE OF CONTENTS

Page

E.0 EXECUTIVE SUMMARY ES-1

E.1 FACILITY BACKGROUND AND MISSION ES-1

E.1.1 Facility Background ES-1

E.1.2 Facility Mission ES-2

E.2 FACILITY OVERVIEW ES-2

E.3 FACILITY HAZARD CATEGORIZATION ES-2

E.4 SAFETY ANALYSIS OVERVIEW ES-2

E.5 ORGANIZATIONS ES-3

E.5.1 Liquid Waste Contractor ES-4

E.5.2 LW Organization ES-4

E.5.3 Saltstone Facility Organization ES-4

E.5.4 Outside Support Organizations ES-4

E.6 SAFETY ANALYSIS CONCLUSIONS ES-5

E.7 DSA ORGANIZATION ES-5

E.0 EXECUTIVE SUMMARY

This Documented Safety Analysis (DSA) report documents the Safety Basis (SB) for the Saltstone Facility at the Savannah River Site (SRS).

E.1 FACILITY BACKGROUND AND MISSION

E.1.1 FACILITY BACKGROUND

The Saltstone Facility (Z-Area) is permitted as two facility segments: the Saltstone Production Facility (SPF), which produces saltstone grout, and the Saltstone Disposal Facility (SDF), which consists of Saltstone Disposal Units (SDUs) used for the disposal of the saltstone grout. The Saltstone Facility is part of the Liquid Waste (LW) facilities. The Saltstone Facility is one portion of an integrated waste management and disposal system located at the SRS. This integrated system is designed to treat liquid waste generated and stored at the SRS and convert the waste into solid waste forms suitable for final disposal. The Saltstone Facility is a critical part of this system because it is used to treat and dispose of low-activity mixed liquid waste generated by other waste treatment facilities in the integrated system. The Saltstone Facility will be used to treat and safely dispose of more than 90% of the waste (by volume) that will be generated from the treatment of High Level Waste (HLW) presently stored in waste tanks. The Saltstone Facility primarily treats low-activity waste generated by the Effluent Treatment Project (ETP), the Modular Caustic Side Solvent Extraction Unit (MCU), and in the future, the Salt Waste Processing Facility (SWPF). These low-activity waste streams are transferred and stored in Tank 50H until they are pumped to the Saltstone Facility for treatment and disposal. Waste from other sources may also be transferred to Tank 50H for processing as long as the waste transferred to the Saltstone Facility meets the requirements of the Saltstone Facility Waste Acceptance Criteria (WAC) Program. These feed streams are the basis for the bounding salt solution radionuclide and chemical concentration tables provided in Chapter 3.

Radioactive startup of the Saltstone Facility was authorized by the Department of Energy (DOE) in 1990. From startup to 1998, almost 3 million gallons of mixed aqueous waste was disposed of as a non-hazardous, Low Level Waste (LLW) solid known as saltstone.

In 1990, SDU 4 was used for the disposal of LLW from Naval Fuel Material Facility (FMF) operations. The FMF waste consisted of approximately 10,000 55-gallon drums containing solidified chemical waste and low levels of uranium. Void spaces in the drums were filled with clean grout (non-radioactive) before disposal. The drums were then placed in SDU 4 Cell A and grouted in place with clean grout. The FMF waste was placed in the Z-Area SDUs for disposal in order to meet the requirements of a consent order from the South Carolina Department of Health and Environmental Control (SCDHEC).

In 1998, operations at the Saltstone Facility were suspended due to a decision to seek alternative processes to prepare HLW solution for the Defense Waste Processing Facility (DWPF) and low-activity waste for the Saltstone Facility. Processing of waste at the Saltstone Facility was restarted in April 2002.

E.1.2 FACILITY MISSION

The present mission for the Saltstone Facility is to treat and dispose of solutions containing low levels of radioactive and chemical contaminants from HLW treatment facilities. The Saltstone Facility is committed to managing operations in such a manner that the health and safety of the offsite Public, the site Collocated Worker (CW), the Facility Worker (FW), and the environment are protected.

E.2 FACILITY OVERVIEW

The Saltstone Facility consists of the SPF, which produces saltstone grout, and the SDF, which consists of SDUs used for disposal of the saltstone grout. The Saltstone Facility is located on a 140-acre site in Z-Area directly across Road F from the DWPF in S-Area and approximately 1-mile northeast of H-Area (see Figure 1.11-1). Low-activity wastewater to be processed into grout is pumped from Tank 50H through an inter-area transfer line. The Saltstone Facility layout is shown in Figure 2.11-1. The boundary between H-Area and the Saltstone Facility is at the inlet flange of the manual inter-area transfer isolation valve located within the Clean Cap Batch Tank (CCBT) enclosure.

The nearest SRS site boundary to the Saltstone Facility is approximately 6.2 miles (10 kilometers) to the north. Fencing encloses the facility and paved roads provide transport access.

The Saltstone Facility receives domestic water from the site-wide distribution system and electricity from the 13.8 kilovolt (kV) electrical power system. Fire protection, health protection, industrial hygiene (IH), emergency medical, and security services are all immediately available to Z-Area from other SRS organizations.

Chapter 2 of the DSA provides a facility description of the Saltstone Facility.

E.3 FACILITY HAZARD CATEGORIZATION

For the purpose of hazard categorization, the Saltstone Facility is considered as one facility. Based on the maximum salt solution inventory, the Saltstone Facility was determined to be a Nuclear Hazard Category 2 (HC-2) facility.

E.4 SAFETY ANALYSIS OVERVIEW

Fire, explosion, loss of confinement, direct radiological exposure, external hazards, and natural phenomena are potential initiating events for hazardous material releases and were evaluated in the hazard evaluation.

Potential hazards associated with operations involve transferring salt solution to the Saltstone Facility that exceeds the Saltstone WAC or transferring a volume of salt solution in excess of the assumed Material at Risk (MAR). Receiving transfers of salt solution that exceed the WAC or the MAR could result in the Saltstone Facility operating with greater than analyzed quantities of radionuclides and/or chemicals. The Saltstone Facility WAC Program was identified and determined to be a Technical Safety Requirement (TSR) Specific Administrative Control (SAC)

performing a Safety Significant (SS) function to protect the inventory input assumptions used in the hazard analysis. The supporting analyses for the process locations within the Saltstone Facility [SPF/SDF e.g., Building 210-Z process room, Salt Solution Receipt Tanks (SSRTs), Salt Feed Tank (SFT), SDUs] may be based on different parameters. However, the Saltstone Facility WAC Program is assumed to protect the most limiting values as outlined in Chapter 3. The SDU Fill Heights were also determined to be TSR SACs. Furthermore, several operating conditions were identified to protect the MAR assumptions in the Consolidated Hazard Analysis (CHA) which are controlled and implemented by the Concentration, Storage, and Transfer Facilities (CSTF) Safety Basis.

The concern for a release of volatiles from the grout as it was curing in the SDUs led to an analysis of an SDU explosion scenario, which was determined to be not credible based on the limited amount of volatiles that could be released and the physical configuration of the SDUs. In order to protect assumptions associated with flammable gas accumulation in the SDU vapor space which could lead to the explosion, SDU SACs that perform an SS function were selected and identified in Section 5.5, and the passive vents on top of SDUs 2, 3, 4, and 5 were designated as SS Design Features. All SDU passive vents allow diurnal breathing and vapor space displacement during grout pour operations in order to prevent the buildup of flammable gases in the vapor space.

The concern for a release of volatiles in the SSRTs led to an analysis of two SSRT explosion scenarios. The SSRT explosion scenarios were determined to have High chemical consequences to the Facility Worker (FW) and the Collocated Worker (CW). SSRT SACs that perform an SS function were selected to protect against an explosion following a Tornado/High Wind Event or Seismic Event. The SSRT SACs are identified in Section 5.5.

The concern for loss of containment and fires in the SSRT Area and the Building 210-Z process room led to the analysis of additional Tornado/High Wind Event scenarios. The Tornado/High Wind Event scenarios were determined to have High chemical consequences to the CW. An SSRT SAC that performs an SS function was selected to protect against the High consequences from a loss of containment and fire following a Tornado/High Wind Event. The SAC is identified in Section 5.5.

No Safety Class (SC) Structures, Systems, or Components (SSCs) were identified for the Saltstone Facility operations and no SS SSCs were identified in addition to those credited for the SDUs 2, 3, 4, and 5 explosion event.

The CHA is the basis for the controls identified to prevent occurrences and mitigate consequences of potential accidents involving radiological and chemical materials. Chapter 3 identifies specific measures enforced by TSR SACs, and programmatic Administrative Controls (ACs) and identifies facility/process controls for protection of the FW.

E.5 ORGANIZATIONS

The following discussion (and the organization descriptions found throughout this DSA) is representative of the Saltstone Facility organizational structure, but may not be accurate in presenting current group and/or individual titles.

E.5.1 LIQUID WASTE CONTRACTOR

Savannah River Remediation LLC (SRR) is the current Liquid Waste Contractor as of July 01, 2009. Washington Savannah River Company (WSRC), formerly Westinghouse Savannah River Company, was responsible for the management and operations of SRS from April 1, 1989 through June 30, 2009. Previously, E. I. du Pont de Nemours and Company managed the facilities since 1950. Management and operation of SRS is currently the responsibility of the Management and Operations (M&O) contractor and LW contractor.

E.5.2 LW ORGANIZATION

LW is the parent organization of the Saltstone Facility. The LW organization is managed by its President. LW includes the following project organizations:

- Engineering
- Closure Projects (part of CSTF)
- Environmental, Safety, Health, and Quality Assurance (ESH&QA)
- Projects, Design and Construction
- Operations
    - DWPF (vitrification and Actinide Removal Process [ARP])/Saltstone
    - CSTF (F Tank Farm, H Tank Farm, ETP, MCU)

E.5.3 SALTSTONE FACILITY ORGANIZATION

The Facility Manager has the overall responsibility for managing the safe operation and maintenance of the Saltstone Facility, including modifications. The Facility Manager reports to the Director of DWPF and Saltstone Facility who reports to the Chief Operating Officer and Deputy Project Manager, who reports to the LW President and Project Manager. The LW organization is supported by Engineering, Maintenance, Quality Assurance and other support groups as necessary to safely manage the radioactive waste that is disposed of at the Saltstone Facility.

Key operations and technical related positions in the various departments of LW are staffed by personnel with technical degrees or several years of industrial experience, primarily in the nuclear industry. The education and experience requirements for personnel involved in the operation, maintenance, training, and technical support of the Saltstone Facility are based on DOE O 426.2 and have been established to ensure that only qualified personnel are selected and assigned to positions which have a functional impact on safety and reliability.

E.5.4 OUTSIDE SUPPORT ORGANIZATIONS

AECOM N&E Technical Services LLC (AECOM N&E TS) provides safety analysis services and other related safety activities as directed by LW. Saltstone Facility uses the M&O contractor for certain supporting activities and the security contractor for site security services. The following organizations within the M&O contractor support the LW contractor:

- Savannah River National Laboratory
- Infrastructure and Project Support
- Environmental, Safety, Health, and Quality Assurance (M&O contractor and LW contractor)

E.6 SAFETY ANALYSIS CONCLUSIONS

The hazard and accident analyses completed to support this DSA provide reasonable assurance that saltstone production and disposal can be accomplished without undue safety and health risks to onsite and offsite populations.

E.7 DSA ORGANIZATION

Chapters 1 through 17 were developed using the format and scope guidelines presented in DOE-STD-3009-94. For each of these chapters, the graded approach was applied towards the level of detail presented.

SALTSTONE FACILITY

DOCUMENTED SAFETY ANALYSIS

CHAPTER 1

SITE CHARACTERISTICS

Revision 14

December 2017

TABLE OF CONTENTS

Page

1.0 SITE CHARACTERISTICS 1-1
1.1 INTRODUCTION 1-1
1.2 REQUIREMENTS 1-1
1.3 SITE DESCRIPTION 1-1
1.3.1 Geography 1-1
1.3.2 Demography 1-2
1.3.2.1 Permanent Population and Distribution 1-2
1.3.2.2 Transient Population Variations 1-2
1.4 ENVIRONMENTAL DESCRIPTION 1-2
1.4.1 Meteorology 1-2
1.4.2 Hydrology 1-2
1.4.3 Geology 1-3
1.4.3.1 Regional Geology (320 km [200 Mile] Radius) 1-3
1.4.3.2 Tectonic Features 1-3
1.4.4 Seismology 1-3
1.4.4.1 Earthquake History of the General Site Region 1-3
1.4.4.2 Development of Design Basis Earthquake 1-3
1.4.4.3 Current Design Response 1-4
1.5 NATURAL EVENT ACCIDENT INITIATORS 1-4
1.5.1 Floods 1-4
1.5.2 Earthquakes 1-4
1.5.3 Tornadoes 1-5
1.5.4 Other Natural Events 1-5

TABLE OF CONTENTS (continued)

Page

1.6 MAN-MADE EXTERNAL ACCIDENT INITIATORS 1-5

1.6.1 Transportation 1-5

1.6.2 Utilities 1-5

1.7 NEARBY FACILITIES 1-5

1.7.1 Non-SRS Nuclear/Industrial Complex Facilities 1-5

1.7.2 SRS Nuclear Facilities 1-5

1.7.3 Industrial Centers 1-6

1.7.4 Military Facilities 1-6

1.8 VALIDITY OF EXISTING ENVIRONMENTAL ANALYSES 1-6

1.9 REFERENCES 1-8

1.10 TABLES 1-9

1.11 FIGURES 1-10

TABLES

Page

1.10-1 Deleted 1-9

FIGURES

Page

1.11-1 SRS Site Map 1-10

1.11-2 Deleted 1-11

1.0 SITE CHARACTERISTICS

1.1 INTRODUCTION

This chapter of the Saltstone Facility Documented Safety Analysis (DSA) provides a description of the Savannah River Site (SRS) characteristics for understanding the Saltstone Facility environs important to the facility's Safety Basis (SB). Information is provided to support and clarify assumptions used in the hazard and accident analyses to identify and analyze potential external accident initiators and accident consequences external to the facility.

When information is provided in another chapter of this DSA or in Chapter 1 of the Site Characteristics and Program Descriptions (SCPD), that chapter is referenced to limit repetition (Ref. 2).

1.2 REQUIREMENTS

Documents that specify codes, standards (STDs), regulations, and U.S. Department of Energy (DOE) Orders, as well as other site documents that govern program elements addressed in this chapter, are listed in the Standards/Requirements Identification Document (S/RID) (Ref. 3). Programmatic compliance assessments are performed against the S/RID and documented as specified in the site Compliance Assurance Manual 8B (Ref. 14). The Standards Management/Compliance Section maintains records of the programmatic compliance assessments.

The format and content satisfies the requirements of DOE-STD-3009-94 (Ref. 1).

1.3 SITE DESCRIPTION

1.3.1 GEOGRAPHY

The Saltstone Facility (Z-Area) is located within the boundaries of the SRS. Section 1.3 of the SCPD contains details describing the geography of the SRS (Ref. 2).

Z-Area is located north of S- and H-Areas in Aiken County, South Carolina, near the center of the SRS (see Figure 1.11-1). The nearest site boundary to Z-Area is approximately 6.2 miles (10 kilometers) to the north. The Saltstone Facility is directly across Road F from the S-Area Defense Waste Processing Facility (DWPF) and approximately 1 mile northeast of H-Area.

For the hazard and accident analyses in Chapter 3, offsite doses and Evaluation Guidelines (EGs) were evaluated for the Maximally Exposed Offsite Individual (MOI) located at the closest point on the SRS boundary (10 kilometers). Onsite doses and EGs were evaluated for the onsite Collocated Worker (CW) at 100 meters from the release.

Z-Area is enclosed by a security fence. Gates are provided at roadways and railways entering the area and at personnel entry points. Access to Z-Area is through Building 704-Z and through personnel access gates on the security fence, but is limited to SRS personnel, authorized

contractors, and visitors on a need-to-enter basis. Public exclusion areas and access control areas for the SRS are described in Section 1.3 of the SCPD (Ref. 2).

1.3.2 DEMOGRAPHY

1.3.2.1 Permanent Population and Distribution

OFFSITE POPULATION

The population and distribution of the surrounding counties within a 50-mile radius of the SRS center is approximately 690,000. This is discussed in the SCPD (Ref. 2). Projected permanent populations and their distribution within a 50-mile radius of the SRS were based on the 2013 U.S. census data and are discussed in Section 1.3.2 of the SCPD (Ref. 2).

Z-AREA

The area within the 5-mile radius of Z-Area is DOE-owned property within SRS; the population for this area consists of SRS workers only.

1.3.2.2 Transient Population Variations

Transient population variations for the general SRS are addressed for the area within approximately 5 miles of the SRS boundary in the SCPD. The transient population components for industrial, school, recreational, and health care, and where there may be seasonal and workday variations in population are discussed in the SCPD. There are no military reservations or correctional institutions located within 5 miles of the site boundary (Ref. 2)

1.4 ENVIRONMENTAL DESCRIPTION

1.4.1 METEOROLOGY

The SRS region has a humid subtropical climate, characterized by relatively short, mild winters and long, warm, and humid summers. The regional climatology, local meteorology, use of meteorological data, and accident dispersion estimates are discussed in the SCPD (Ref. 2).

1.4.2 HYDROLOGY

Much of SRS is located on the Aiken Plateau. The plateau slopes to the southeast approximately 5 feet per mile [1 meter (m)/kilometer (km)] and is dissected by streams that drain into the Savannah River. The major tributaries that occur on SRS are the Upper Three Runs Creek, Four Mile Branch, Pen Branch, Steel Creek, and Lower Three Runs Creek (Figure 1.11-1). For more information on the regional hydrologic description within the SRS vicinity and downstream of SRS, see the SCPD (Ref. 2).

HYDROSPHERE - SAVANNAH RIVER SITE AREA

The location, size, shape, and other hydrological characteristics of streams, rivers, lakes, shore regions, and groundwater environments that influence the general site are described in the SCPD (Ref. 2).

HYDROSPHERE - Z-AREA

Z-Area is located on a local topographic high-point (minimum grade level is 275 feet above mean sea level) and is located north of S-Area. Runoff from Z-Area is diverted indirectly to McQueen Branch to the east and Upper Three Runs Creek to the north. McQueen Branch drains into Tinker Creek near its junction with Upper Three Runs Creek. All streams in the area are at substantially lower elevations than Z-Area. Near-surface groundwater flows toward McQueen Branch, approximately 0.75 mile (1.2 km) to the northeast.

ENVIRONMENTAL ACCEPTANCE OF EFFLUENTS

There are active NPDES permitted outfalls within SRS. These are discussed in the SCPD (Ref. 2).

1.4.3 GEOLOGY

1.4.3.1 Regional Geology (320 km [200 Mile] Radius)

Regional geology is discussed in the SCPD (Ref. 2).

1.4.3.2 Tectonic Features

Based on previous studies at SRS and elsewhere, there are no known capable or active faults within the 320-km radius of the site that influence the seismicity of the region with the exception of the blind, poorly constrained faults associated with the Charleston seismic zone (Ref. 2).

1.4.4 SEISMOLOGY

1.4.4.1 Earthquake History of the General Site Region

The SCPD provides a broad description of the historic seismic record (non-instrumental and instrumental) of the southeastern United States and SRS (Ref. 2). Aspects that are of particular importance to SRS include the following:

- The Charleston, South Carolina, area is the most significant seismogenic zone affecting SRS.
- Seismicity associated with SRS and surrounding region is more closely related to South Carolina Piedmont-type activity. This activity is characterized by occasional small shallow events associated with strain release with small-scale faults, intrusive bodies, and the edges of metamorphic belts.

1.4.4.2 Development of Design Basis Earthquake

Probabilistic hazard, deterministic ground motion prediction methodologies, and the DBE history for the SRS are discussed in the SCPD (Ref. 2). The basis and development of the seismic criteria is specified in the SRS Engineering Standards Manual, Standard 1060 (Ref. 12). This Engineering Standard provides justification for Performance Category (PC) / Seismic Design Classification (SDC) equivalencies. Structures regulated by SCDHEC are required, under seismic provisions for hazardous waste management locations, to maintain confinement for

earthquake ground motions with a ten percent probability of occurrence in two hundred and fifty years (Ref. 12). Ground motion prediction methodology and earthquake source, path, and site assumptions are found in the SCPD (Ref. 2).

1.4.4.3 Current Design Response

The current PC-3, PC-4, SDC-3, SDC-4, and SDC-5 sitewide spectra are based on the analysis (Ref. 11) developed in 1997, and incorporate variability in soil properties and soil column thickness. Technical Report WSRC-TR-97-0085 describes the development of the Design Basis Earthquake (DBE) and the recommended SRS spectra (Ref. 11). Subsequent reviews have resulted in modifications directed by DOE. The SRS Engineering Standards Manual, Standard 1060, contains the preliminary Performance Category (PC) -3 design spectrum for SRS (Ref. 12). This spectrum supersedes the results and the previous values derived in reports of prior investigations and studies. More detail regarding the evolution of the SRS design basis is found in the SCPD (Ref. 2).

Five Performance Categories (PCs) for NPH resistance are specified, from PC-0, for Structures, Systems, and Components (SSCs) that require no hazard evaluation, to PC-4, a desired performance level comparable to commercial nuclear power plants. The category for Saltstone Safety Significant (SS) SSCs is PC-2 or PC-3. SRS design basis spectra for PC-3 is found in Reference 12. This spectrum is considered “preliminary” because of the potential for variation of soil properties outside of what was measured and used for development of the design basis spectrum. To eliminate the open item and use the spectrum as “confirmed” for a given facility, the soil parameters at the specific site or facility must be reviewed for consistency with the soil parameters used during development of the SRS spectrum. The SRS design basis spectrum is intended for simple response analysis and is not appropriate for soil-structure interaction analysis or geotechnical assessments. If simple response analysis is not acceptable and a more complex approach is required, an SRS-specific probabilistic seismic assessment should account for soil properties derived from site geological, geophysical, geotechnical and seismic investigations (Ref. 2).

1.5 NATURAL EVENT ACCIDENT INITIATORS

This section identifies specific natural events considered to be potential accident initiators.

1.5.1 FLOODS

As discussed in Section 1.5 of the SCPD, Z-Area is located on relatively elevated regions of the SRS. Therefore, flooding from surface streams is not a credible hazard (Ref. 2).

1.5.2 EARTHQUAKES

Earthquakes are discussed in Section 1.4 of the SCPD (Ref. 2). The hazard and accident analysis related to earthquakes is included in Chapter 3.

1.5.3 TORNADOES

Tornadoes are discussed in Section 1.4 of the SCPD (Ref. 2). The hazard and accident analysis related to high winds and tornadoes is included in Chapter 3.

1.5.4 OTHER NATURAL EVENTS

Lightning, excessive snow and/or rain, and extremes in temperature are discussed in Section 1.4 of the SCPD (Ref. 2). The Hazard Analysis (HA) in Chapter 3 considered lightning, snow, rain, and extreme temperatures.

1.6 MAN-MADE EXTERNAL ACCIDENT INITIATORS

1.6.1 TRANSPORTATION

Section 1.6 of the SCPD describes the transportation network and the location of airports and airspace within the general area of the SRS (Ref. 2). The HA in Chapter 3 considers vehicle/aircraft/helicopter crashes into the Saltstone Facility.

1.6.2 UTILITIES

There are no natural gas or oil pipeline networks in use at the SRS. Electrical transmission lines are discussed in Section 1.6.1.2 of the SCPD (Ref. 2). The HA in Chapter 3 considers the impacts from utilities.

1.7 NEARBY FACILITIES

The SCPD identifies nuclear, industrial, and military facilities within a 50-mile (80 km) radius of the SRS center that have potential safety importance to the SRS (Ref. 2).

1.7.1 NON-SRS NUCLEAR/INDUSTRIAL COMPLEX FACILITIES

There are two non-SRS nuclear facilities and two non-SRS non-nuclear facilities within 50 miles of SRS that are discussed in the SCPD (Ref. 2).

1.7.2 SRS NUCLEAR FACILITIES

This section discusses nuclear facilities that are in proximity to Z-Area and have safety implications for this area.

S-Area is located within 0.5 miles (0.8 km) of Z-Area. Risk to Z-Area safety because of S-Area operations is minimal.

The Tritium Facilities are located within 1 mile (1.6 km) of Z-Area. Risk to Z-Area safety is minimal except for tritium releases.

The H Canyon facility is located within 1 mile (1.6 km) of Z-Area. Risk to Z-Area safety is minimal.

H-Area is located within 1.5 miles (2.4 km) of Z-Area. It is considered a low hazard operation and poses no risk to Z-Area.

E-Area is located within 2 miles (3.2 km) of Z-Area. It is used for disposal of solid SRS radioactive waste and poses no risk to Z-Area.

The F Canyon facility is located approximately 2.5 miles (4 km) from Z-Area. It is considered a low hazard operation and poses no risk to Z-Area.

M-Area (reactor materials facilities) was located approximately 6 miles (9.7 km) from Z-Area. The facility processed aluminum, lithium, uranium, and target materials for SRS reactors. The facility is demolished and poses no risk to Z-Area.

Five production reactor facilities (C, K, L, P, and R) are located within a 6.5-mile (10.5-km) radius of Z-Area and are all in cold shutdown. Although C, K, and L Reactors are in cold shutdown, the facilities are being used for storage of moderator and/or nuclear materials from the DOE complex. P and R Reactors are fully grouted and permanently sealed. All are considered low hazard operations and pose no risk to Z-Area.

The heavy water plant (D-Area), located approximately 9 miles (14.5 km) from Z-Area, is demolished and poses no undue risk to facilities in Z-Area.

For Z-Area, receipt of liquid transfers from H-Area is the predominant inter-area operation for the Saltstone Facility. These transfers are conducted in accordance with the sending and receiving facilities Safety Basis requirements, and associated implementing procedures, to ensure that the Safety Basis assumptions (e.g., source terms, hydrogen generation rates, pH) of each facility's hazard and accident analyses are maintained.

1.7.3 INDUSTRIAL CENTERS

The SCPD discusses industries within a 5-mile radius of SRS (Ref. 2).

The 5-mile (8-km) area surrounding Z-Area lies entirely within SRS boundaries; therefore, no industrial centers other than onsite SRS facilities are applicable.

1.7.4 MILITARY FACILITIES

Information on military facilities is discussed in the SCPD (Ref. 2).

1.8 VALIDITY OF EXISTING ENVIRONMENTAL ANALYSES

The Environmental Impact Statement (EIS) for DWPF (which includes the Saltstone Facility) was issued to the public and to federal and state agencies in February 1982 (Ref. 6). A supplemental EIS for the DWPF was issued in November 1994 to address design changes to the facility since issuance of the 1982 EIS (Ref. 7). Another supplemental EIS was issued in June 2001 to address alternatives for separating the high-activity and low-activity fractions of the High Level Waste (HLW) salt solution (Ref. 8). Additionally, a supplemental EIS was issued January 2006, that addressed salt processing alternatives (Ref. 16).

No significant discrepancies exist or indicate the need to revise and update the assumptions used in the DWPF EIS as a result of the preparation of this DSA.

1.9 REFERENCES

1. Preparation Guide for U.S. Department of Energy Nonreactor Nuclear Facility Documented Safety Analyses. DOE-STD-3009-94, Change Notice No. 3, U.S. Department of Energy, Washington DC, March 2006.

2. Savannah River Site - Site Characteristics and Program Descriptions. SRNS-IM-2013-00019, Rev. 1, March 2016.

3. Standards/Requirements Identification Document. SRR-RP-2009-00558.

4. Deleted

5. Deleted

6. Final Environmental Impact Statement, Defense Waste Processing Facility, Savannah River Plant, Aiken, SC. DOE/EIS-0082, Assistant Secretary for Defense Programs, Office of Defense Waste and Byproducts Management, Savannah River Plant, Aiken SC, February 1982.

7. Final Supplemental Environmental Impact Statement, Defense Waste Processing Facility. DOE/EIS-0082-S, U.S. Department of Energy, Savannah River Site, Aiken SC, November 1994 (Record of Decision 60 FR 18589, April 12, 1995).

8. Savannah River Site Salt Processing Alternatives Final Supplemental Environmental Impact Statement. DOE/EIS-0082-S2, U.S. Department of Energy, Savannah River Operations Office, Aiken SC, June 2001 (Record of Decision 66 FR 52752, October 17, 2001).

9. Deleted

10. Deleted

11. SRS Seismic Response Analysis and Design Basis Guidelines. WSRC-TR-97-0085, Rev. 0.

12. SRS Engineering Standards Manual. WSRC-TM-95-1, Structural Design Criteria, Standard No: 01060.

13. Deleted

14. Compliance Assurance Manual. Procedure Manual 8B.

15. Deleted

16. Supplement Analysis, Salt Processing Alternatives at the Savannah River Site. DOE/EIS-0082-S2-SA-01, January 2006 (Record of Decision 71 FR 3834, January 24, 2006).

1.10 TABLES

Table 1.10-1 Deleted

1.11 FIGURES

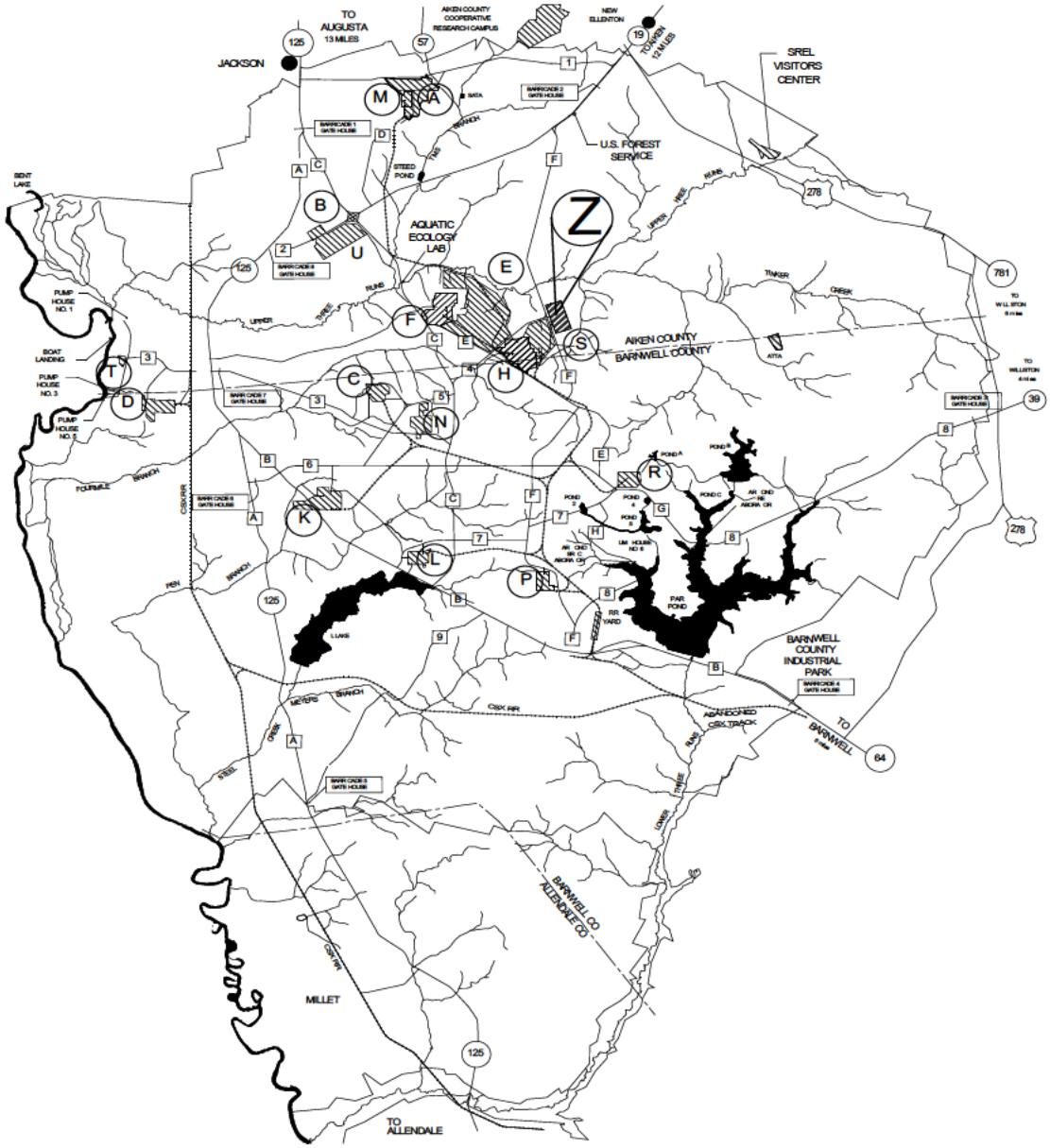

Figure 1.11-1 SRS Site Map

Figure 1.11-2 Deleted

SALTSTONE FACILITY

DOCUMENTED SAFETY ANALYSIS

CHAPTER 2

FACILITY DESCRIPTION

Revision 15

July 2018

TABLE OF CONTENTS

Page

2.0 FACILITY DESCRIPTION 2-1
2.1 INTRODUCTION 2-1
2.2 REQUIREMENTS 2-1
2.3 FACILITY OVERVIEW 2-1
2.4 FACILITY STRUCTURE 2-2
2.5 PROCESS DESCRIPTION 2-5
2.5.1 Process Systems 2-5
2.5.1.1 Bulk Material Unloading and Conveying System 2-5
2.5.1.2 Premix Blending and Conveying System 2-6
2.5.1.3 Premix Feeder System 2-6
2.5.1.4 CCBT Inhibited Water System 2-6
2.5.1.5 Salt Solution Feed 2-7
2.5.1.6 Saltstone Mixer, Grout Hopper, and SHOC 2-9
2.5.1.7 Saltstone Transfer and SDU Filling System 2-10
2.5.1.8 Pig Launching System 2-11
2.5.1.9 High Pressure Flush System 2-12
2.5.1.10 Leachate Collection and Return System 2-12
2.5.1.11 Drainwater Collection and Return System 2-13
2.5.1.12 Process Vessel Ventilation Systems 2-14
2.5.2 Process Operation 2-15
2.5.2.1 Salt Solution Transfer 2-15
2.5.2.2 Bulk Material Handling 2-15
2.5.2.3 Saltstone Mixing and Transfer 2-16

TABLE OF CONTENTS (continued)

Page

2.5.2.4 Saltstone Disposal 2-17

2.5.2.5 Deleted 2-18

2.6 CONFINEMENT SYSTEMS 2-18

2.7 SAFETY SUPPORT SYSTEMS 2-19

2.7.1 Fire Protection System 2-19

2.7.2 Radiological Monitoring System 2-19

2.8 UTILITY DISTRIBUTION SYSTEMS 2-20

2.8.1 Electrical System 2-20

2.8.2 Standby Diesel Generator 2-20

2.9 AUXILIARY SYSTEMS AND SUPPORT FACILITIES 2-20

2.9.1 Plant, Instrument, Pig Launch, and Breathing Air 2-20

2.9.2 Process Water 2-21

2.9.3 Domestic Water 2-21

2.9.4 Saltstone Process Control System 2-21

2.9.5 Heating, Ventilation, and Air Conditioning System 2-21

2.9.6 Saltstone Product Test Laboratory 2-22

2.9.7 Deleted 2-22

2.9.8 Deleted 2-22

2.9.9 SDU Portable Ventilation System 2-22

2.10 REFERENCES 2-23

2.11 FIGURES 2-25

TABLES

Page

2.5-1 ..... Deleted

FIGURES

Page

2.11-1 Z Area Map 2-25
2.11-2 Simplified Process Diagram 2-26
2.11-3 Bulk Material Unloading 2-27
2.11-4 Premix Blending and Conveying 2-28
2.11-5 Premix Feeder System 2-29
2.11-6 Salt Feed Tank 2-30
2.11-7 Deleted 2-31
2.11-8 Facility Process Vessel Ventilation System 2-32
2.11-9 CCBT Inhibited Water System 2-33
2.11-10 Deleted 2-34
2.11-11 Deleted 2-34
2.11-12 SDU Portable Ventilation System (SDU 2-type arrangement) 2-35
2.11-13 Salt Solution Receipt Tank 2-36
2.11-14 SSRT Gravity Drain Pipe Loop with Siphon Break Assembly 2-37
2.11-15 SSRT Process Vessel Ventilation System 2-38
2.11-16 SDU Portable Ventilation System (SDU 6-type arrangement) 2-39

2.0 FACILITY DESCRIPTION

2.1 INTRODUCTION

This chapter describes the Saltstone Facility, the overall process, and major SSCs.

2.2 REQUIREMENTS

Chapter 2 was developed using the content, format, and graded approach guidelines outlined in the following documents:

- Title 10 Code of Federal Regulations (CFR) Part 830, Subpart B (Ref. 1)
- DOE Order 420.1C (Ref. 28)
- DOE-STD-3009-94 (Ref. 2)
- S/RID, SRR-RP-2009-00558 (Ref. 3)

For the Saltstone Facility structures, the structural requirements used were those in effect when the designs were first developed and approved. The structures were designed and constructed in accordance with applicable du Pont and SRS Engineering and Design Standards. These standards provide specific, detailed, and instructive information for the designer including references to national codes and standards (Ref. 3).

2.3 FACILITY OVERVIEW

The Saltstone Facility is permitted as two separate facilities: the Saltstone Production Facility (SPF), which produces saltstone grout; and the Saltstone Disposal Facility (SDF), which consists of Saltstone Disposal Units (SDUs) used for disposal of the saltstone grout. The Saltstone Facility is part of the Liquid Waste (LW) organization. The Saltstone Facility is one portion of an integrated waste management and disposal system located at the SRS. This integrated system is designed to treat HLW that was generated and stored at the SRS, and convert the waste into solid waste forms suitable for final disposal. The Saltstone Facility is a critical part of this system because it is used to treat and dispose of low-activity mixed liquid waste generated by other waste treatment facilities that are also part of the integrated system. The Saltstone Facility will be used to treat and safely dispose of more than 90% of the waste (by volume) that will be generated from the treatment of HLW presently stored in waste tanks. The Saltstone Facility primarily treats low-activity waste generated by the Modular Caustic Side Solvent Extraction Unit (MCU), the Effluent Treatment Project (ETP), and in the future, the Salt Waste Processing Facility (SWPF). Low-activity waste from these processes is stored in Tank 50H until it is pumped to the Saltstone Facility for treatment and disposal. Low activity waste from other sources may also be transferred to Tank 50H for processing as long as the waste transferred to the Saltstone Facility meets the requirements of the Saltstone Facility Waste Acceptance Criteria (WAC) Program.

2.4 FACILITY STRUCTURE

The Saltstone Facility process structures, SDUs, support, and administration buildings include the following (See Figure 2.11-1):

- Building 201-Z - Process Tank Area – Building 201-Z contains the Facility Process Vessel Ventilation System (PVVS), the Salt Feed Tank (SFT), and the Clean Cap Batch Tank (CCBT). The enclosure structure contains liquid spills and provides radiation shielding. The steel structure above the enclosure supports a monorail, and a protective roof.

  Also adjacent to the Process Tank Area is the Caustic Addition System. The system consists of a 310 gallon tank and a transfer pump within a diked area.

- Building 201-1Z – Salt Solution Receipt Tank (SSRT) Area – Building 201-1Z contains the SSRT PVVS, two SSRTs, and a pump gallery. The enclosure structure contains liquid spills and provides radiation shielding. The steel structure above the enclosure supports a monorail, and a protective roof.

  The SSRT Area is adjacent to the Process Tank Area (201-Z). The breezeway between 201-Z and 201-1Z is sloped to prevent liquid from pooling.

- Building 205-Z - Storage Silos and Blending System – Building 205-Z is used to store and blend the dry materials used in the saltstone process. The major components are the four storage silos for containing the dry materials, the weigh hopper, and the premix blenders.

- Building 210-Z - Process Building – Building 210-Z consists of a main structure and an outdoor area to the east of the building for the exhaust stack and instrument shelter. The main structure consists of a process area, support areas, a feed bin, and a premix weigh hopper support structure. The process area contains the saltstone mixer, grout hopper, grout pump, high-pressure flush pump and pig launching stations. The process area serves as a confinement area for any spills of either salt solution or saltstone grout that may occur during processing. The process area contains floor drains that drain to the SFT. In addition to the process area, Building 210-Z contains the Central Control Room (CCR), maintenance shops, and other support and administrative offices.

- Buildings 451-1Z and 451-4Z - Saltstone SDUs – Building 451-1Z (SDU 1 [Vault 1]) is located in the southern portion of Z-Area. SDU 1 consists of a single row of six reinforced concrete cells, 100 feet by 100 feet with a height of 25 feet. Cells A, B, and C are full of grout and capped with a concrete roof. The remaining three cells are empty.

  Building 451-4Z (SDU 4 [Vault 4]) was designed to store saltstone grout received via a grout transfer line from the Process Building (210-Z). This grout transfer line is physically disconnected (air gap) from the SPF. SDU 4 is inactive and will not be receiving any additional radioactive or clean cap grout. SDU 4 is located in the southeastern portion of Z-Area. SDU 4 consists of two units, each 200 feet by 300 feet. Each unit is subdivided into six 100 foot by 100 foot reinforced concrete

cells. The SDU has overall dimensions of 200 feet by 600 feet with an average interior height of 27 feet. Cell A is currently full and clean capped. All other cells (except C, G, and I) have received a clean cap from an external source. All twelve cells are protected by a permanent roof. The roof is sloped to prevent rainwater from pooling and joints are sealed, thus, minimizing infiltration of rainwater into the filled SDU. Cells B, D, E, F, H, J, K, and L have two passive vents through the roof to allow passive breathing. Cells C, G, and I have at least one passive vent and Cell A does not have any passive vents. Each vent includes a filter housing that is placed on the flange of the vent pipe approximately one foot above the roof. The vent pipe and filter housing are covered by a rain cap.

For both Building 451-1Z (SDU 1) and Building 451-4Z (SDU 4) the vertical cell walls are 18 inches thick and the bases of the cells are 24 inches thick. Each cell has a total volume of approximately 2 million gallons.

The SDU 1 and SDU 4 layout is shown in Figure 2.11-1.

- Building 451-2Z - Saltstone SDUs – Building 451-2Z (SDU 2) is located in the northern portion of Z-Area. SDU 2 consists of two reinforced concrete cells A and B, each 150 feet in diameter, with a side wall height of 22 feet and a center height of 23.5 feet. SDU 2 Cells A and B are protected by a permanent concrete roof integrated into the side walls with reinforcing steel. Each cell roof is sloped from the center to the outer diameter to prevent rainwater from pooling, thus, minimizing infiltration of rainwater into the SDU. The SDU 2 Cells are backfilled below grade with the cell roof at ground level.

  Each of the cells has three passive vents through the roof to allow passive breathing of the SDU cells. Each vent includes a filter housing that is placed on the flange of the vent pipe approximately one foot above the roof. The vent pipe and filter housing are covered by a rain cap.

  For Building 451-2Z (SDU 2), the vertical cell walls have a minimum thickness of 8 inches. The exterior walls are prestressed with circumferential steel wire, layered in shotcrete. The concrete floor is a minimum 8 inches thick supported by a 6-inch concrete upper mud mat and a 4-inch concrete lower mud mat. The concrete roof is a minimum 8 inches thick. 48 interior columns support the roof. Each cell has a total volume of approximately 2.9 million gallons. The grout transfer line from the SPF to SDU 2 has been blanked. SDU 2 is operationally filled and will not be receiving any additional radioactive or clean cap grout.

  The SDU 2 layout is shown in Figure 2.11-1.

- Building 451-3Z - Saltstone SDUs – Building 451-3Z (SDU 3) is located in the northern portion of Z-Area. SDU 3 consists of two reinforced concrete cells A and B, each 150 feet in diameter, with a side wall height of 22 feet and a center height of 23.5 feet. SDU 3 Cells A and B are protected by a permanent concrete roof integrated into the side walls with reinforcing steel. Each cell roof is sloped from the center to the outer diameter to prevent rainwater from pooling, thus, minimizing infiltration of rainwater into the SDU. The SDU 3 Cells are backfilled below grade with the top of the cell roof approximately two and a half feet above ground level.

Each of the cells has three passive vents through the roof to allow passive breathing of the SDU cells. Each vent includes a filter housing that is placed on the flange of the vent pipe approximately one foot above the roof. The vent pipe and filter housing are covered by a rain cap.

For Building 451-3Z (SDU 3), the vertical cell walls have a minimum thickness of 8 inches. The exterior walls are prestressed with circumferential steel wire, layered in shotcrete. The concrete floor is a minimum 12 inches thick supported by a 6-inch concrete upper mud mat and a 4-inch concrete lower mud mat. For Cell A, the interface between the upper mud mat and cell bottom slab is lined with a high density polyethylene sheet that drains to an external sump for leakage testing. The concrete roof is a minimum 8 inches thick. 48 interior columns support the roof. Each cell has a total volume of approximately 2.9 million gallons. Lights and CCTV are installed in the cells to monitor pouring operations as required.

The SDU 3 layout is shown in Figure 2.11-1.

- Building 451-5Z - Saltstone SDUs – Building 451-5Z (SDU 5) is located in the northern portion of Z-Area. SDU 5 consists of two reinforced concrete cells A and B, each 150 feet in diameter, with a side wall height of 22 feet and a center height of 23.5 feet. SDU 5 Cells A and B are protected by a permanent concrete roof integrated into the side walls with reinforcing steel. Each cell roof is sloped from the center to the outer diameter to prevent rainwater from pooling, thus, minimizing infiltration of rainwater into the SDU. The SDU 5 Cells are backfilled below grade with the top of the cell roof approximately two and a half feet above ground level.

  Each of the cells has three passive vents through the roof to allow passive breathing of the SDU cells. Each vent includes a filter housing that is placed on the flange of the vent pipe approximately one foot above the roof. The vent pipe and filter housing are covered by a rain cap.

  For Building 451-5Z (SDU 5), the vertical cell walls have a minimum thickness of 8 inches. The exterior walls are prestressed with circumferential steel wire, layered in shotcrete. The concrete floor is a minimum 12 inches thick supported by a 6-inch concrete upper mud mat and a 4-inch concrete lower mud mat. The concrete roof is a minimum 8 inches thick. 48 interior columns support the roof. Each cell has a total volume of approximately 2.9 million gallons. The grout transfer line from the SPF to SDU 5 has been blanked. SDU 5 is operationally filled and will not be receiving any additional radioactive or clean cap grout.

  The SDU 5 layout is shown in Figure 2.11-1.

- Building 451-6Z - Saltstone SDUs – Building 451-6Z (SDU 6) is located in the northern portion of Z-Area. SDU 6 is a reinforced concrete SDU with an approximate diameter of 375 feet and a side wall height of 43 feet. SDU 6 has a total volume of approximately 35 million gallons. The roof is sloped from the center to the outer diameter to prevent rainwater from pooling, thus minimizing infiltration of rainwater into the SDU. The vertical wall sections are approximately 10 inches thick at the top and 24 inches at the base. The exterior walls have vertical post-tensioning rods, and are prestressed with circumferential steel cable, layered in shotcrete. The

concrete floor is sloped (similar to the roof) from the center to the outer diameter. 208 interior columns support the roof. The wall and floor have an interior waterproof liner. The floor also has a high-density polyethylene (HDPE) geomembrane under the floor. Lighting, thermocouples, and CCTV are installed in the SDU to monitor pouring operations as required. SDU 6 will remain above grade and will be backfilled at a later date.

SDU 6 has four passive vents through the roof to allow passive breathing. Each vent includes a filter housing that is placed on the flange of the vent pipe approximately one foot above the roof. The vent pipe and filter housing are covered by a rain cap.

SDU 6 has four leakage detection sumps, one in each quadrant, contained within the HDPE geomembrane. Each detection sump has a vent pipe vented to atmosphere.

The SDU 6 layout is shown in Figure 2.11-1.

- Building 901-Z - Fire Water Pump House – Building 901-Z houses one diesel fire pump, an electric motor-driven fire pump, and the diesel fuel oil tank.
- Building 951-Z - Substation Building – Building 951-Z contains electrical control and distribution equipment. A skid-mounted diesel generator is located outdoors next to the Substation Building.
- Building 704-Z - Operations Building – Building 704-Z houses the change rooms, health protection count room and office, Product Test Laboratory, administration offices, and lunchroom. Air flow through the radiologically controlled areas of the Operations Building is exhausted through a stack located on the east side of the building.
- Area 980-Z - Process Water Tank – Area 980-Z consists of the Process Water (PW) tank, PW pumps, and associated equipment.

The buildings, support structures, and SDUs are designed to comply with the codes and standards outlined in Reference 3. Details on structures and SDUs are contained in Reference 4.

2.5 PROCESS DESCRIPTION

The major Saltstone Facility systems are described below. A simplified process diagram of the Saltstone process is shown in Figure 2.11-2.

2.5.1 PROCESS SYSTEMS

2.5.1.1 Bulk Material Unloading and Conveying System

Dry bulk materials for the saltstone process, consisting of cement, slag, and thermally beneficiated flyash, are delivered separately in trucks to the facility. Rail delivery of dry materials has been discontinued and railcar unloading and conveying facilities are retired in place. The truck unloading system consists of one station (inlet piping) for each of four silos. Dry materials arriving in trucks are unloaded using blowers supplied by the vendor/shipper. A simplified flow diagram is shown in Figure 2.11-3.

Four storage silos with a total volume of nearly 18,000 cubic feet are provided. Two baghouse dust collectors control dust vented from the receiving silo during a transfer. One collector is mounted on Silo 4. The other collector, mounted on Silo 2, controls dust vented from Silos 1, 2, and 3 through large pipes in the silo roofs between Silos 1, 2, and 3. Collected dust is dislodged from the collector bags into the silo on which the collector is mounted.

Details on the bulk material unloading and conveying system are contained in Reference 5.

2.5.1.2 Premix Blending and Conveying System

A weigh hopper is provided to enable weighing of dry materials to prepare batches of premix, which is the blended product of the three dry materials. A simplified flow diagram is shown in Figure 2.11-4. The weigh hopper, mounted on load cells, is located below the base of the storage silos and is connected to each silo by an air slide. Materials are gravity-fed into the weigh hopper from the silos.

Premix blenders that are used to blend individual batches of dry materials are installed below the weigh hopper. A line is provided for pneumatic transfer of blended dry materials from the premix blenders to the premix feed bin located on top of the Process Building (210-Z). Air compressors and an air receiver provide the requisite compressed air for the mixing and transferring functions.

Details on the premix blending and conveying system are contained in Reference 5.

2.5.1.3 Premix Feeder System

Blended premix that has been transferred from the silo area is received in the premix feed bin. The premix feed bin provides surge capacity for the weighing-feeding system. This feeding system provides a controlled flow of premix to the saltstone mixer. A simplified flow diagram of the system is shown in Figure 2.11-5.

The premix is received into the premix feed bin, a conical-bottom 50-ton capacity cylindrical bin located on top of the Process Building (210-Z). A baghouse dust collector on the batch bin retains the dust vented during the transfer from the blending tanks. Continuous level indication and an independent high level alarm are provided to monitor the bin level.

The premix weigh hopper for the loss-in-weight feeder is also located on top of the Process Building (210-Z) under the premix feed bin. The premix weigh hopper is supported on load cells, which enable feeding of the solids by dual variable-speed screw feeders on a loss-in-weight basis.

Details on the premix feeder system are contained in Reference 5.

2.5.1.4 CCBT Inhibited Water System

During waste treatment operations, Inhibited Water (IW) is used to begin the grout production process, conduct periodic flushes, and to perform system shutdown. IW is PW with sufficient caustic added to increase the pH to no greater than 12.5. Once grout production operations reach

steady-state after system startup, salt solution is integrated into the process and IW is secured. During the grout production run, IW is used to periodically flush grout from the internal surfaces of the grout hopper and supplements flow to the mixer as a response to low salt solution flow. During process setback or shutdown, liquid feed to the mixer transitions to IW during extended feed. Extended feed allows grout to be removed from the process room while minimizing the addition of salt solution to the SDU. IW is also used after the grout production run for final process component flushing.

The CCBT provides mixing and storage capability for the IW system. IW is generated in the CCBT by mixing 50 wt% Sodium Hydroxide (NaOH) with a large quantity of PW to produce an alkaline solution (nominal pH 10 – 12.5). The 50 wt% NaOH is supplied by a centrifugal pump from the 310 gallon caustic storage tank. In the event that IW is not available, PW is available for flushing purposes from the Process Water Tank area. (Figure 2-11.9)

The CCBT is a cylindrical tank with a nominal operating capacity of 45,000 gallons and a capacity of approximately 50,392 gallons at overflow. The CCBT shell and roof are 3/8 inch thick and the bottom is ½ inch thick carbon steel. The CCBT has a diameter of 25 feet and a height of 14 feet. The tank bottom is sloped to form a low point on one side of the tank. A pump is provided on the tank to discharge the IW to the grout process and flush systems. An agitator is provided for mixing.

The CCBT, which is located immediately adjacent to the SFT and the 210-Z Process Building, is placed in a below grade concrete enclosure. The walls of the enclosure are 12-inch thick reinforced concrete. The bottom of the tank is approximately 6 feet below grade, which places the top of the CCBT approximately 8 feet above grade. The walls of the CCBT enclosure extend approximately 8 feet above grade, which places the top of the enclosure walls approximately even with the top of the CCBT. A steel platform is installed above the top of the CCBT to provide for equipment access. The floor of the enclosure is sloped to direct spillage or leakage into a sump. A sump pump is provided for transferring liquid into the SFT. The CCBT is vented to the Facility PVVS.

Details on the CCBT IW system are contained in Reference 5.

2.5.1.5 Salt Solution Feed

The SSRTs, or alternatively the SFT, receive low-activity waste (commonly referred to as salt solution) through a jacketed inter-area transfer line from Tank 50H. The inter-area transfer line is under the administrative control of H-Area Tank Farm Operations. The boundary between H-Area and Z-Area is the inlet flange to the manual, inter-area transfer isolation valve, V-0040, which is located at the east wall in the CCBT enclosure. Located between the transfer isolation valve V-0040 and the SSRTs/SFT are in-line flow elements used to verify the amount of salt solution received from Tank 50H. The SFT also receives drainage from the Facility PVVS, the Leachate Collection and Return System, the Drainwater Collection and Return System, the Process Building drains, and the Operations Building drains, including lab hoods, sinks, and decontamination showers.

The SSRTs are cylindrical tanks with a capacity of approximately 65,500 gallons each at overflow. The shell, roof, and bottom of each SSRT are constructed of carbon steel. A simplified flow diagram for an SSRT is shown in Figure 2.11-13. The SSRTs have a diameter of 26 feet and a height of 19.5 feet. The tank bottom is sloped to form a low point at the tank outlet.

The SSRTs, which are located immediately adjacent to the 210-Z Process Building and the 201-Z Process Tank Area, are placed in an above grade concrete enclosure. The SSRT enclosure is divided into three cells with each SSRT in a separate cell and one cell (the pump gallery) containing transfer pumps and valves. The exterior walls of the enclosure are 18-inch thick reinforced concrete, with the exception of the north wall of SSRT #1 which is 24 inches thick. The bottom of the enclosure is level with grade and the enclosure walls extend approximately 24 feet above grade. An elevated roof is provided above the SSRT enclosure. A steel walking platform covers the top of the SSRT enclosure to provide personnel access to equipment and to provide radiation shielding. The platform can be removed in sections when required for equipment access. The floor of each SSRT cell is sloped to direct spillage or leakage to a sump within in each cell. The pump gallery floor drains to the SSRT #1 cell sump. Each SSRT cell sump is provided with a pump for transferring liquid into the respective SSRT.

Each SSRT is provided with an agitator that, when required, keeps solids in suspension. A sampler is provided at the discharge side of the SSRT transfer pumps for collecting liquid samples. The SSRTs are provided with liquid level instrumentation and associated high/low-level alarms and interlocks. The SSRTs are also provided with temperature instrumentation and associated high-temperature alarms and interlocks. The SSRTs are vented by the SSRT PVVS to provide contamination control, prevent pressurization, and prevent gas accumulation. In addition, an overflow line relieves pressure and directs overflow to the corresponding sump. Two 100% capacity centrifugal transfer pumps feed salt solution from the SSRTs to the saltstone mixer. The transfer pumps are capable of drawing suction from either SSRT. A gravity drain pipe loop with siphon break assembly is provided on the transfer pump discharge to preclude draining and siphoning the SSRTs outside of the SSRT enclosure. The siphon break assembly consists of an orifice and a three-way valve. A simplified flow diagram of the siphon break assembly is shown in Figure 2.11-14. The salt solution feed rate is controlled based on the premix feed rate to the saltstone mixer. A recirculation line with pressure control valve regulates the pressure in the feed line. A PW line to the transfer pump suction is provided for pump flushing, as needed. Chemical injection connections located on the discharge side of the SSRT transfer pumps are blind flanged for future installation. A simplified flow diagram of the system is shown in Figure 2.11-2.

The SFT is a cylindrical tank with a capacity of approximately 6,504 gallons at overflow. The SFT shell, roof, and bottom are constructed of 3/8-inch carbon steel. A simplified flow diagram of the system is shown in Figure 2.11-6. The SFT has a diameter of 12 feet, and a height of 8.5 feet. The tank bottom is sloped to form a low point on one side of the tank.

The SFT, which is located immediately adjacent to the 210-Z Process Building, is placed in a below grade concrete enclosure. The walls of the enclosure are 12-inch thick reinforced concrete. The bottom of the enclosure is approximately 16 feet below grade, which places the top of the SFT approximately 8 feet below grade. The walls of the SFT enclosure extend

approximately 8 feet above grade. A common roof covers both the CCBT and the SFT. A steel platform is installed above the top of the SFT to provide for equipment access and additional shielding. The floor of the enclosure is sloped to direct spillage or leakage into a sump. A sump pump is provided for transferring liquid into the SFT.

The SFT is provided with an agitator that, in the past when required, kept solids in suspension. Currently, the SFT agitator is incapable of operation and power to the agitator has been secured. An air jet sampler is provided for collecting liquid samples. The SFT is provided with liquid level instrumentation and associated high-level alarms and interlocks. The SFT is vented to the Facility PVVS to prevent pressurization and gas accumulation. In addition, an overflow line relieves pressure and directs overflow to the sump. A centrifugal pump feeds salt solution, drainwater, and leachate from the SFT to the SSRTs, or alternatively to the saltstone mixer. The salt solution feed rate (when directed to the saltstone mixer) is controlled based on the premix feed rate to the saltstone mixer. A recirculation line and pressure control valve regulate the pressure in the feed line. A PW line to the pump suction dip leg is provided for pump priming or flushing, as needed.

Details on the salt solution feed system are contained in References 5 and 29.

2.5.1.6 Saltstone Mixer, Grout Hopper, and SHOC

The saltstone mixer, grout hopper, and Saltstone Hopper Overflow Container (SHOC) are located within the Process Building (210-Z). The saltstone mixer receives liquid (either IW or salt solution) and dry premix materials (cement, slag, and thermally beneficiated flyash) and mixes them to produce either Clean Cap grout (mixed with IW or PW) or radioactive grout (mixed with salt solution). The dry premix is gravity fed from the loss-in-weight hopper located on top of the Process Building. On facility startup and recovery from setback conditions, IW is fed from the CCBT to begin grout production operations before the introduction of waste. Salt solution is then fed from the SSRTs (or alternatively from the SFT) into the saltstone mixer at a flow rate based on the premix feed rate. When salt solution processing has been completed, the dry premix flow is stopped and the liquid feed transitions to IW to remove remaining grout from the process room. Once liquid feed and dry premix flow are stopped, the system is flushed with IW or PW. A simplified flow diagram of the system is shown in Figure 2.11-2.

The saltstone mixer is a continuous, twin-screw mixer. Nominal throughput is 150 to 160 gallons per minute (gpm) of grout. The saltstone mixer has an internal volume of about 40 gallons and is designed so that all parts that come into contact with the saltstone grout can be flushed with IW or PW. The dry premix enters the top of the saltstone mixer through a chute and mixed grout discharges out of the bottom of the saltstone mixer through a 10-inch line into the grout hopper.

The grout hopper is a container located below the saltstone mixer and has a capacity of approximately 450 gallons at overflow. The grout hopper is shaped to minimize grout pluggage. The grout hopper provides a surge volume to ensure steady flow of material from the grout pump to the SDU. Spray nozzles are provided inside the grout hopper for flushing purposes. IW or PW is also used for flushing the grout hopper and saltstone mixer discharge. The grout hopper has continuous level instrumentation and an independent high level alarm. An agitator is

provided to disperse solids in the event a process upset deposits a moderate amount of dry feeds into the grout hopper from the mixer. It also prevents the grout from setting while it resides in the grout hopper. A diversion sampling valve assembly may be installed in the piping section between the grout hopper and the grout pump to facilitate sampling of the grout that is sent to the SDUs.

The SHOC provides radioactive material containment in the event of an upset condition in the grout production process. The SHOC has a capacity of approximately 447 gallons at overflow and is located in the 210-Z Process Building regulated process area. The SHOC, the grout hopper via the overflow line to the SHOC, and the grout pump via the pump head vent lines to the SHOC are vented to the Facility PVVS. The SHOC has a bubbler level indicator which has high-level alarms to alert the operator to potential upset conditions. The SHOC overflows to the process room floor drain which is routed to the SFT. The SHOC is designed to be removed following an upset condition by the process room overhead crane.

The upset conditions which may add grout or salt solution to the SHOC include:

- Grout hopper can overfill with grout or salt solution (e.g., discharge line is blocked). Since the grout hopper has an overflow line, grout or salt solution will overflow into the SHOC.
- Grout hopper contents can be drained to the SHOC if needed.
- Grout transfer line is protected from overpressurization by an in-line Rupture Pin. The Rupture Pin will release pressure from the system by opening and releasing grout into the SHOC.
- Failure of the grout pump, whose heads are vented to the SHOC, causes the release of grout or salt solution that is directed to the SHOC.

Details on the saltstone mixer, grout hopper, and SHOC are contained in Reference 5.

2.5.1.7 Saltstone Transfer and SDU Filling System

The grout pump, provided to transfer grout to the SDUs, is a dual head positive displacement peristaltic type pump sized to deliver grout at approximately 180 gpm. This type of pump is used in commercial applications to pump grout-like material. Both pump head vents are piped to the SHOC, which provides radioactive material containment in the event of pump hose failure. A simplified flow diagram of the system is shown in Figure 2.11-2.

Saltstone grout is pumped from the Process Building to an SDU through the grout transfer line. The grout transfer line features pipe sections with couplings for ease of assembly and disassembly. A rupture pin assembly is installed on the discharge side of the grout pump to protect from an overpressurization scenario in the event the grout transfer line becomes blocked. The grout transfer line exits the east side of the Process Building (210-Z) in a covered concrete trench, rises out of the trench, and runs along grade to the SDU being filled. The length of the grout transfer line can vary between 1,100 and 3,500 feet, depending on the location of the SDU. This grout transfer line has been blanked to SDUs 2 and 5 and is physically disconnected (air gap) to SDU 4. SDUs 2, 4, and 5 will not be receiving any more radioactive or clean cap grout because SDUs 2 and 5 are operationally filled and SDU 4 is inactive. Additionally, SDU 4 Cells B, D, E, F, H, J, K, and L have been previously clean capped from an external source.

Selected cells in SDU 4 were upgraded to allow processing of waste from Deliquification, Dissolution, and Adjustment (DDA) activities. The modifications to these cells included addition of grout height level indicators on three of the four cell wall interior surfaces, installation of filters on the cell vents as needed for radiological control purposes, and installation of a Leachate Collection and Return System to collect drainage of any liquid present in the cell. The drained leachate is pumped back to the SFT or drained locally into carboys.

The grout transfer line may be directed to SDU 3 or 6. The grout transfer line to SDU 3 includes all the piping and valving necessary to direct saltstone into the correct SDU 3 cell. There is a piggable three-way valve to direct grout to either Cell A or Cell B of SDU 3. The grout transfer line to SDU 6 includes all of the piping and valving necessary to direct saltstone grout to one of the nine (9) pour port locations in the SDU, which allows for grout distribution. The three-way grout valves for SDU 6 are provided with flushing connections which could be connected to an external flushwater source. The designs permit pouring into an SDU 3 cell or one of the SDU 6 pour locations at any given time.

Grout height indicators are installed on multiple interior columns of SDUs 3 and 6. The CCTV system is installed to monitor grout pour progress. Installed filters are mounted to the SDU passive vents as needed for radiological control purposes; and for SDU 6, contain airborne contaminates. During ventilation, a passive vent allows outside air to be drawn into the cell to purge potential flammable gases from the cell vapor space. A Drainwater Collection and Return System has been installed to collect drainage of any liquid present in the SDUs. The drainwater is pumped back to the SFT.

Details on the saltstone transfer and SDU filling system are contained in Reference 5.

2.5.1.8 Pig Launching System

The Pig Launching System is used to clean the grout transfer line at the end of a production run or in case of an abnormal system shutdown. A pig is a polyurethane ball that is propelled through the grout transfer line by compressed air. The pig pushes the grout out of the grout transfer line, wipes the pipe walls, and drops into the SDU.

There are two pig launchers: a primary launcher and a backup launcher. They are located downstream of the grout pump. The backup launcher is used if the primary launcher fails or during recovery from equipment failures when the grout transfer line is required to be cleaned more than one time.

Compressed air for propelling the pig is provided by the Pig Launching Air System. Two air accumulators receive compressed air from the base air compressor via the pig launch booster. Each accumulator is dedicated to a single pig-launching unit. The accumulator contains sufficient air for one pig launching operation. A back-up pig launch air system, consisting of two banks of air cylinders, is also provided.

Details on the Pig Launching System are contained in Reference 5.

2.5.1.9 High Pressure Flush System

The High Pressure Flush System, located in the process room, consists of a high pressure flush pump. The system uses PW to flush the grout hopper and the grout transfer lines.

Details on the High Pressure Flush System are contained in Reference 5.

2.5.1.10 Leachate Collection and Return System

In order to limit the hydrostatic pressure applied to the base of the vertical cell walls, various cells in SDU 4 were backfitted with a Leachate Collection and Return System. In the past, bleed water, combined with rainwater from inleakage and condensate from the humid atmosphere, provided sufficient hydrostatic pressure on the bottom of the cell walls to cause the SDU walls to crack. Drain holes had to be drilled through the SDU walls to relieve the pressure and the cracks in the SDU walls had to be repaired.

As part of a facility modification, cells B, D, E, F, H, J, K, and L in SDU 4 had sheet drains installed on the interior surfaces of the vertical walls. The sheet drains consist of a 7/16-inch thick polystyrene, egg-carton shaped drain core covered on one side with polypropylene filter fabric. The filter fabric allows the water to pass into the drain core while restricting the movement of the unset grout. The water that passes through the fabric is then free to fall by gravity to the bottom of the sheet drain. In order to store the water received in the sheet drains, a 12-inch diameter collection header was installed along the entire interior perimeter of the associated cells. The bottom of the sheet drain is connected to the collection header at ports installed along the collection header perimeter. Each cell's collection header stores bleed water, rainwater, and condensate, which are collectively referred to as leachate. The collected leachate is periodically removed from the individual cells via the Leachate Collection and Return System. A separate 2-inch diameter collection header is installed along the west side of SDU 4. The east side may be temporarily configured with hoses, utilizing a carboy when required. The two leachate pumps, one on each side of SDU 4, transfer the leachate, condensate, or flush water (by an external source) in a common return line to the SFT. The east and west cells may be isolated, connected to the corresponding collection header, or connected directly to the associated leachate pump.

Each leachate pump and return line is protected from overpressure by a relief valve on the discharge of the pump. The relief valve discharges into a leachate collection drum. The leachate return line consists of approximately 1,700 feet of 1-inch stainless steel transfer line. The leachate return line is sloped from a high-point located on top of SDU 4 such that when the leachate return pumps are stopped, the remaining leachate in the line drains by gravity to the SFT or can be pumped back to a cell. The system has local flush capability. Flushwater connections on the suction and discharge of the leachate pump facilitate flush forward to SFT as well as reverse flush to SDU 4 using a portable flushwater source. The total volume of the Leachate Collection and Return System is less than 20,000 gallons (Ref. 21).

2.5.1.11 Drainwater Collection and Return System

In order to limit the amount of drainwater, SDUs 2, 3, 5, and 6 contain a Drainwater Collection System.

For SDUs 2, 3, and 5, sheet drains are installed on the interior surfaces of the vertical walls. The sheet drains consist of an egg-carton shaped drain core covered on one side with filter fabric. The filter fabric allows the water to pass into the drain core while restricting the movement of the unset grout. The water that passes through the fabric is then free to fall by gravity to the bottom of the sheet drain. In order to store the drainwater received from the sheet drains, a 12-inch diameter collection header is installed along the entire interior perimeter of each cell. The bottom of the sheet drain is connected to the collection header at ports installed along the collection header circumference. Each cell drainwater collection header stores bleed water from the grout, flush water, and condensate, which is collectively referred to as drainwater. Drainwater level in the collection header can be monitored remotely. The collected drainwater is periodically removed from the individual cells via the Drainwater Collection and Return System. Each cell contains a downcomer connected to the drainwater collection header. A submersible pump is located inside of the downcomer to facilitate drainwater removal from the collection header. A roof penetration and associated isolation valve connect the drainwater collection pump discharge to the SFT.

For SDU 6, eight drainwells are installed to collect drainwater. The drainwells consist of 30-inch diameter well screens wrapped in filter fabric, which allows the water to pass into the drainwell while restricting the movement of the unset grout. Four of the drainwells are located on the outer perimeter of the SDU and placed in a sump to further aid in the drainwater collection, and four drainwells are located within the interior of the SDU. Each of the drainwells extends from the bottom of the SDU to one foot below the roof. Each drainwell contains a submersible pump, which is connected to drainwater return lines. The drainwater return lines associated with the SDU include all the piping and valving necessary to direct the drainwater to the Drainwater Return System.

Drainwater discharge piping from SDUs 2, 3, 5, and 6 join into a common return line. Transfer to the SFT is via a drainwater collection valve box. The remotely operated valves in the drainwater collection valve box align the SDU Drainwater Return System to the SFT. The drainwater return line is sloped from a high-point located near the SDU 2 cells. When the SDU drainwater return pumps are stopped, the remaining drainwater in the line drains by gravity back to the affected cell and to the SFT. The SDU 6 return line connects to the SDU 3/5 return line before the high point near SDU 2. Therefore when the return pumps are stopped the drainwater in the return lines off the roof edge of SDU 6 gravity drains to SDU 3/5. The combined volume (SDUs 2, 3, 5, and 6) of the Drainwater Collection and Return System is approximately 31,600 gallons (Ref. 31).

2.5.1.12 Process Vessel Ventilation Systems

2.5.1.12.1 Facility Process Vessel Ventilation System

The CCBT, SFT and SHOC are vented to the Facility PVVS. Manual valves in each vent line are adjusted as necessary to maintain the proper vacuum in the equipment being vented. This system consists of a mist eliminator, heater, two High Efficiency Particulate Air (HEPA) filters in parallel, and two blowers in parallel. A simplified flow diagram of the system is shown in Figure 2.11-8.

The mist eliminator receives the vent stream from the CCBT and SFT and discharges the stream to the process vent heater. The mist eliminator drains to the SFT. A vent stream from the SHOC discharges into the vent stream between the mist eliminator and process vent heater. The heater raises the temperature of the stream to prevent condensation in the HEPA filter. The vent stream then flows through one of two HEPA filters. The pressure drop across the filter is measured, and high and low differential pressure alarms are provided.

The vent stream enters one of two vent blowers. A low-flow interlock automatically starts up the standby blower. The blower exit piping is equipped with a silencer and the stream is discharged to the Process Building (210-Z) stack.

Details on the Facility Process Vessel Ventilation System are contained in Reference 5.

2.5.1.12.2 SSRT Process Vessel Ventilation System

The SSRTs are vented to the SSRT PVVS. Manual valves in each vent line are adjusted as necessary to maintain the proper vacuum in the equipment being vented. This system consists of an inlet HEPA filter on each SSRT, a mist eliminator on each SSRT vent line, an exhaust skid heater, two exhaust HEPA filters in parallel, and two exhaust blowers in parallel. A simplified flow diagram of the system is shown in Figure 2.11-15.

Air is pulled by the exhaust blower into the SSRT via an inlet HEPA filter. The inlet HEPA filter dampers have a mechanical stop to allow diurnal breathing. The mist eliminators receive the vent streams from the SSRTs and discharge the streams to the exhaust skid heater. The piping upstream of the exhaust skid heater is sloped to drain back to the SSRTs. The exhaust skid heater raises the temperature of the stream to prevent condensation on the exhaust HEPA filter. The vent stream then flows through one of two exhaust HEPA filters. The pressure drop across the filter is measured, and high and low differential pressure alarms are provided.

The vent stream enters one of two exhaust blowers. The exhaust blower exit stream is discharged to the SSRT stack which is equipped with an air sample collection port. Exhaust flow indication and low flow alarms are provided.

Details on the SSRT Process Vessel Ventilation System are contained in Reference 30.

2.5.2 PROCESS OPERATION

The Saltstone Facility treats salt solutions containing low levels of radioactive and chemical contaminants to convert these solutions to a grout suitable for disposal in large concrete SDUs located in Z-Area. The saltstone production and disposal process is divided into four interrelated operations as described in Sections 2.5.2.1 thru 2.5.2.4.

2.5.2.1 Salt Solution Transfer

Limits on the chemical and radionuclide concentrations, as well as the flammability, temperature, and pH for the feed solution, are controlled by characterization by upstream waste generators. Receiving transfers of salt solution to the SSRTs (or alternatively to the SFT) are not permitted unless the appropriate documentation of waste stream sample analysis has been accepted by Z-Area. All waste generators who send material to Z-Area are required to meet the Saltstone Facility WAC or obtain approval of the deviation. The WAC assures that the maximum radiological and chemical concentrations evaluated in the DSA are not exceeded.

The receipt of salt solution transfers to the SSRTs (or alternatively to the SFT) from Tank 50H in H-Area is controlled from the transferring facility's control room. The Z-Area operator sends a request for the salt solution transfer by activating a permissive interlock. The transferring facility then starts the transfer pump to begin the transfer of salt solution to the SSRTs (or alternatively to the SFT). The Saltstone operator monitors the flow indication from the in-line flow meter(s) and SSRTs (or SFT) level indications during the transfer. In the event the in-line flow meter monitoring the incoming transfer becomes inoperable, material balance calculations for the salt solution received can be performed using an approved facility procedure to allow for continuation of salt solution transfers.

Normally, the transferring facility shuts down the pump at the end of a transfer operation. However, if the SSRTs (or SFT) reach a predetermined high level, the transfer pump is stopped automatically through level interlocks and the inter-area transfer valve automatically closes (Ref. 5, 29).

2.5.2.2 Bulk Material Handling

Cement, slag, and thermally beneficiated flyash are delivered via commercial trucks. The dry material is conveyed pneumatically to the appropriate storage silo. The materials are blown directly to the silos using compressed air from the truck's compressor. One silo contains cement, one contains slag, one contains thermally beneficiated flyash, and one is a spare.

The dry materials are discharged from each silo through its discharge valve to an enclosed air slide, one per silo, which conducts the fluidized material downslope to a weigh hopper centrally located under the four silos. Cement, slag, and thermally beneficiated flyash, each in turn, are weighed to predetermined quantities to achieve a specified ratio in the batch. A passive baghouse dust collector on the weigh hopper controls the dust generated in this transfer.

As the predetermined weight of dry material is reached, the weigh hopper feed valves between the air slide and weigh hopper close, and the weigh hopper discharge valve opens. The weigh

hopper contents empty by gravity into the idle unit of the two premix blenders located underneath. A passive baghouse dust collector on each blender controls the dust generated when the material discharges into the blender vessel.

The blenders can operate alternately in the batching, mixing, and transferring functions. While one blender is batching or mixing, the second is transferring a blended batch. Blending is initiated when a batch of the cement, slag, and thermally beneficiated flyash has been accumulated in one of the blender tanks. Fluidizing air from the air compressors is injected into the tank over a period of time to thoroughly mix the constituents. The blended product is called premix.

When the blending process is complete, the premix batch is transferred to the premix feed bin above the Process Building (210-Z). The premix is blown out of the pressurized blending tank when the tank discharge valve opens at a preset pressure. The fluidized material is carried horizontally through a line in a covered trench to the Process Building (210-Z), then upward through the line until it discharges into the top of the premix feed bin.

2.5.2.3 Saltstone Mixing and Transfer

Premix from the premix feed bin and IW from the CCBT or salt solution from the SSRTs (or alternatively from the SFT) are mixed in the saltstone mixer to produce grout. The bin discharges from its bottom-cone outlet to the premix weigh hopper. Dust generated by material coming into the premix weigh hopper is controlled by the premix feed bin dust collector. The premix weigh hopper vents into the top of the premix feed bin above.

Agitators in the premix weigh hopper bottom facilitate movement of the material into the dual screw feeders contained in the contiguous feeder housing. The screw feeders may be operated singly or in parallel. Material discharged from the feeder(s) passes through a transition hopper that penetrates the regulated process area roof and drops vertically into the saltstone mixer below.

During normal mixing operations, the saltstone ingredients are fed into the mixer to produce saltstone grout. Prior to processing salt solution, IW is used to initiate and establish dry premix feed flow to the mixer. Once steady-state grout production operations are established, salt solution is transitioned into the process while simultaneously the IW flow is cut back. This transition of flow is accomplished by opening and closing the respective flow control valves via Distributed Control System (DCS) until only salt solution and dry premix feeds are being fed to the mixer.

Following the proper mixing of premix dry feeds and IW or salt solution, the grout is gravity-fed to the grout hopper located beneath the saltstone mixer. The grout hopper provides a surge volume to ensure steady flow from the grout pump to the SDU. The level in the grout hopper is monitored and controlled by the DCS by varying the speed of the grout pump. The grout hopper overflows and drains to the SHOC, which provides radioactive material containment in the event of an upset condition in the grout production process.

The design grout production operations rate is about 180 gpm. The nominal grout production operations rate is about 150-160 gpm. The composition of saltstone (grout) consists of salt solution or IW, cement, slag, and thermally beneficiated flyash.

Saltstone grout is pumped by a positive displacement peristaltic type pump. The speed can be adjusted since power is supplied via a variable frequency drive. The pump speed is modulated to maintain the level in the grout hopper. The pump heads vent to the SHOC. If pump hose failure occurs, any grout or salt solution released into the head is directed to the SHOC. A rupture pin assembly is installed on the discharge side of the grout pump to protect from an overpressurization scenario in the event the grout transfer line becomes blocked. If the rupture pin activates to relieve the internal pressure due to a high pressure in the discharge side of the grout pump, grout material is released and directed to the SHOC. A conductivity probe is installed in the discharge side of the rupture pin and alarms when the rupture pin has actuated or in the event the rupture pin has severely leaked into the body. During process shutdown, liquid feed transitions to IW, and then the mixer, the grout hopper, the grout pump, and connecting valves and piping of the system are flushed with IW from the CCBT or PW from the Process Water Tank to remove residual grout from the system. Transitioning to IW minimizes the amount of salt solution that would be otherwise pumped to the SDU. The flush of the system is directed to the SDU to minimize the transfer of insoluble grout solids to the SSRTs or SFT. Near the end of the flushing operation, the flush is redirected to an SSRT or the SFT by a four-way valve that is a part of the Pig Launching System, and a pig is launched to clean the grout transfer line that runs to the SDU.

The pig discharged from the launcher enters the grout transfer line through a four-way valve, which has two positions. The first position (grout transfer) aligns the grout pump discharge with the grout transfer line to the SDU and aligns pig launcher #1 with an SSRT or the SFT. The second position (pig launch) aligns pig launcher #1 with the grout transfer line to the SDUs and aligns the grout pump discharge with an SSRT or the SFT. Pig launcher #2 has the same two positions except the second position is aligned to the SFT only.

The system is designed with software logic to stop the dry and liquid feeds on certain abnormal conditions (e.g., high level in the grout hopper). The software actuates a condition called ‘setback’ where the dry feed to the mixer is stopped and liquid feed to the SDU is stopped after a delay to allow a flush. During the setback condition, the mixer and grout pump continue to operate and salt solution is recirculated to the SSRTs (or alternatively to the SFT).

Mixing and transfer operations are monitored and controlled via the DCS. The DCS is located in the CCR and is the primary interface between the operator and facility hardware. The mixing and transfer process is normally controlled in an automatic fashion; if abnormal conditions arise, the operator can assume manual control over the various processes.

2.5.2.4 Saltstone Disposal

Grout is pumped via a grout transfer line from the process area to either SDU 3 or 6. For SDU 3, the saltstone grout discharges into the approximate center of the SDU cell and has an outward, self-leveling tendency. For SDU 6, the grout has multiple discharge locations (only one is used at a time) and has the same outward, self-leveling tendency. Discharge of the grout and filling of

the cell can be observed from the CCR with a CCTV. The SDUs 3 and 6 level markings are on the roof support columns. Temperature of the saltstone monoliths can be monitored by the Temperature Monitoring System (TMS). Thermocouple trees are part of the TMS. Humidity monitoring equipment may be installed in the SDU vapor space. Core samples may be taken periodically from an SDU using temporary sampling/retrieval devices.

2.5.2.5 Deleted

2.6 CONFINEMENT SYSTEMS

Z-Area confinement features restrict the release of chemical and radioactive material into the environment or areas normally occupied by facility personnel. The following methods are used in confining chemical and radioactive material that may be present in Z-Area:

- Internal concrete shield walls surrounding the regulated process area in the Process Building confine contamination.
- The Process Building (210-Z) Ventilation System is designed to maintain a negative pressure in the process area to control and confine airborne radioactive materials to this area.
- Ventilation systems for the Process Building (210-Z) and the Operations Building (704-Z) are designed to flow from the cleaner areas within the building to more highly contaminated areas; the system discharges through HEPA filters prior to exhausting through the stack.
- The major vessels containing radioactive material, the SSRTs and SFT, are designed to be at a negative pressure with respect to the surrounding environment and are ventilated through HEPA filters.
- Vessels containing radioactive material are designed to prevent releases of radioactive liquids.
- Vessels containing radioactive material are located in diked areas, enclosures, or in process rooms that confine spills and prevent releases of radioactive liquids to the environment.
- The SHOC provides radioactive material containment in the event of an upset condition in the grout production process.
- Vessels containing process chemicals are located in diked areas to confine spills and prevent releases of chemicals to the environment.
- Filters are provided on the SDU passive vents as required to limit release of contamination to the environment.
- The SDU Portable Ventilation System is designed to ventilate through a HEPA filter(s) limiting contamination released from the grout to the environment.

2.7 SAFETY SUPPORT SYSTEMS

2.7.1 FIRE PROTECTION SYSTEM

The Saltstone Facility fire suppression and detection systems include the fire water supply and distribution system, exterior fire protection system for Z-Area buildings, interior fire sprinkler systems, Halon™ fire suppression system, and a fire detection and alarm system.

Fire pumps and a storage tank are provided in accordance with National Fire Protection Association (NFPA) Standards. There are two parallel pumps: one diesel-driven and one electric motor-driven. Both pumps take suction from a 130,000-gallon above ground steel storage tank.

An underground fire protection water supply loop around the Saltstone Facility is installed in accordance with NFPA Standards. The fire protection water supply loop feeds fire hydrants distributed around the loop. Each hydrant has a curb box isolation valve. Post indicator valves are installed in the looped main to provide adequate sectional control for the loop. Connections with post indicator valves are provided for fire water supply to the Operations Building (704-Z) and Process Building (210-Z).

The Process Building (210-Z) is equipped with ionization smoke detectors or rate-compensated, fixed-temperature thermal detectors in all areas. There are also fire alarm pull boxes and fire alarm horns. Automatic Halon™ fire suppression is provided for the CCR. The Halon™ system is automatically actuated by photoelectric and ionization smoke detectors. Portable fire extinguishers are found throughout the facility. The Process Building (210-Z) has sprinkler protection, except for the process area, the CCR, CCR Input/Output (I/O) cabinet room, and the Electrical Control Room (ECR).

Manual pull boxes and fire alarm horns are installed in all areas of the Operations Building (704-Z). The Operations Building (704-Z) has sprinkler protection, except for the ECR. The sprinkler system is fed by the previously described fixed fire pumps through the Z-Area fire water distribution loop. There are multiple-purpose, dry-chemical portable fire extinguishers throughout the building.

Fire protection features are also provided for the Substation Building (951-Z), the Fire Water Pump House (901-Z), and the Bulk Material Handling Building (205-8Z).

Details on the Saltstone Facility fire protection system are contained in Reference 10.

2.7.2 RADIOLOGICAL MONITORING SYSTEM

The Area Radiation Monitors (ARMs) in Z-Area provide continuous gamma radiation monitoring at the SSRTs, the SFT, in the process room, and on the roof of the 210-Z Process Building. The monitors provide audible and visual alarms when radiation levels exceed a preset value.

If installed instrumentation is removed from service for maintenance or calibration, a radiation monitoring program providing similar detection capability should be maintained, consistent with the potential for unexpected increases in radiation dose rates.

Details on the radiological monitoring systems are contained in Reference 9.

2.8 UTILITY DISTRIBUTION SYSTEMS

2.8.1 ELECTRICAL SYSTEM

The Saltstone Facility electrical system provides for the distribution and control of electrical energy. Also provided are lighting, grounding, lightning protection, and miscellaneous systems such as cathodic protection, heat tracing, emergency lighting and communication systems.

Normal power is fed from a 13.8 kilovolt (kV) electrical power system. The power is distributed to the facility through the main substation located in the Substation Building (951-Z) and 13.8 kV aerial lines.

A 13.8 kV-480 volt (V) load center located in Building 951-Z receives the 13.8 kV power and steps it down to 480 V. This load center supplies six 480 V Motor Control Centers (MCCs) for distribution of power throughout the production area. Additional 13.8kV-480V stepdown transformers are used to supply the SDUs.

The standby power system consists of a diesel engine-driven generator connected to MCC-B123 via an automatic transfer switch. An Uninterruptible Power Supply (UPS) provides single-phase power to critical loads when normal power is lost. The UPS load list includes: the local fire alarm system, the Public Address System, DCS controls, I/O cabinets, the Halon™ fire control panel, the communication and alarm system, and the PLC Train A&B. A detailed description of the UPS power distribution is provided in Reference 11.

Details on the complete electrical system are contained in Reference 11.

2.8.2 STANDBY DIESEL GENERATOR

A diesel generator supplies standby electrical power to necessary systems during a power failure. The diesel generator fuel tank holds enough fuel for approximately 40 hours of operation.

Details on the standby diesel generator are contained in Reference 11.

2.9 AUXILIARY SYSTEMS AND SUPPORT FACILITIES

2.9.1 PLANT, INSTRUMENT, PIG LAUNCH, AND BREATHING AIR

A base air compressor supplies the instrument and plant air systems, and an air booster supplies the pig launch air systems. The pig air booster takes air from the base air compressor and boosts it to the required pressure for the pig launch air system. Compressed air is delivered from the base air compressor to the plant and instrument air receivers and the pig air booster. The pig air booster supplies the two pig launch air receivers. Back-up pig launch air is provided by banks of air cylinders to the air receivers. Emergency backup plant air is supplied by the air blender air compressors described in Section 2.5.1.2. A portable air compressor can be tied into the system to supply instrument and plant air if the primary system is out of service.

Breathing air, if required, is supplied by a portable breathing air compressor and manifold. Details on the plant, instrument, pig launch, and breathing air systems are contained in Reference 9.

2.9.2 PROCESS WATER

PW is supplied to Z-Area from the site-wide domestic water system. The PW system, consisting of an outdoor tank and two PW pumps, supplies PW to the SSRTs, the SFT, the High Pressure Flush Pump, the Saltstone Mixer area, hose stations in the CCBT enclosure area, dry materials unloading, and blending areas. Makeup water is also supplied to the Operations Building (704-Z) water chillers, the CCBT to generate IW, and the air compressor closed-loop cooling system in the Process Building (210-Z).

Details on the PW system are contained in Reference 9.

2.9.3 DOMESTIC WATER

Z-Area domestic water is provided from the site-wide domestic water system.

Details on the domestic water system are contained in Reference 9.

2.9.4 SALTSTONE PROCESS CONTROL SYSTEM

The Saltstone Process Control System (SPCS) is a DCS based control system that is provided to control and monitor the operation of the Saltstone process and facilities. The heart of the system is the process control module, which stores and executes the logic and control functions of the system. Information from the process and control signals to the process flows through the I/O hardware of the system. The system is designed to be continuously energized with control operations taking place as performed by the operator.

Details on the SPCS are contained in Reference 9.

2.9.5 HEATING, VENTILATION, AND AIR CONDITIONING SYSTEM

The Saltstone Facility Heating, Ventilation, and Air Conditioning (HVAC) systems maintain comfortable temperatures in working areas, maintain negative pressures in regulated areas relative to atmosphere, filter exhaust air from regulated areas with HEPA filters, and heat and ventilate equipment rooms. The Saltstone Facility HVAC system serves the Operations Building (704-Z), Process Building (210-Z), Fire Water Pump House (901-Z), and Substation Building (951-Z).

The Process Building - Process Area HVAC Exhaust System consists of two equipment trains. There are two HEPA filter units and two exhaust fans with one filter unit and one fan per ventilation train. The equipment is located just east of the process area outside the Process Building and is operated locally. Each filter unit contains a low efficiency filter and a HEPA filter. The filters remove radioactive contaminants from the air before it is discharged to the environment. The process room ventilation system discharges through the same stack as the Facility PVVS.

Details on the HVAC system are contained in Reference 12.

2.9.6 SALTSTONE PRODUCT TEST LABORATORY

The Saltstone Product Test Laboratory is used, as dose rate limits will allow, to conduct simple analyses of feed material and product samples to ensure quality. The laboratory is located in Operations Building (704-Z). For reasons to keep dose rates As Low As Reasonably Achievable (ALARA), if samples are high dose rate, they are sent to the SRNL to be analyzed remotely. Feed solutions are tested for properties such as density and solids content to ensure proper feeding. The saltstone grout can be tested for properties such as compressive strength. The Saltstone Product Test Laboratory is also used to prepare samples for shipment to outside laboratories for more sophisticated analyses.

A hood is also located in the Building 210-Z process room for the purpose of preparing and analyzing grout samples.

Details on the Saltstone Product Test Laboratory are contained in Reference 13.

2.9.7 DELETED

2.9.8 DELETED

2.9.9 SDU PORTABLE VENTILATION SYSTEM

The SDUs are designed with the capability to install a portable ventilation system to purge the vapor space if needed. The portable ventilation system draws atmospheric air into the SDU through roof-mounted passive vents and discharges to atmosphere through a HEPA filter(s).

<u>SDU 2-type Arrangement</u>

When installed, the exhaust ducts are connected to one or more of the SDU cell roof penetrations (4 total, one in each quadrant) via flex ducting in a manner that uses the roof slope to drain the flex ducts of any condensate back into the SDU cell (See Figure 2.11-12). The portable ventilation system is powered locally. The system is manually operated with local flow instrumentation and controls.

<u>SDU 6 Arrangement</u>

When installed, the exhaust duct is connected to the center SDU port via flex ducting (See Figure 2.11-16). The portable ventilation system is powered locally. The system is manually operated with local flow instrumentation and controls.

2.10 REFERENCES

1. Nuclear Safety Management. Subpart B, Title 10 Code of Federal Regulations (CFR) Part 830, U.S. Department of Energy, Washington DC, January 2001.
2. Preparation Guide for U.S. Department of Energy Nonreactor Nuclear Facility Documented Safety Analyses. DOE-STD-3009-94, Change Notice No. 3, U.S. Department of Energy, Washington DC, March 2006.
3. Standards/Requirements Identification Document. SRR-RP-2009-00558.
4. Saltstone Facility System Design Description (U) Saltstone Structures and Salt Disposal Units (SDU)'s. G-SD-Z-00002.
5. Saltstone Facility System Design Description (U) Saltstone Process. G-SD-Z-00003.
6. Deleted
7. Deleted
8. Deleted
9. Saltstone Facility System Design Description (U) Saltstone Support. G-SD-Z-00006.
10. System Description Document for Saltstone Fire Protection. G-SD-Z-00008.
11. System Description Document for Saltstone Electrical. G-SD-Z-00004.
12. System Description Document for Saltstone HVAC. G-SD-Z-00005.
13. System Description Document for Saltstone Product Laboratory. G-SD-Z-00007.
14. Deleted
15. Deleted
16. Deleted
17. Deleted
18. Deleted
19. Deleted
20. Deleted
21. Vault 4 Leachate Volume. S-CLC-Z-00072, Rev. 1.
22. Deleted
23. Deleted
24. Deleted
25. Deleted
26. Deleted
27. Deleted

28. Facility Safety. DOE Order 420.1C, Change 1, U.S. Department of Energy, Washington DC, February 2015.

29. Saltstone Processing Facility Salt Solution Receipt Tank System Piping & Instrumentation Diagram. M-M6-Z-00109, Rev. 7.

30. SSRT Process Vessel Ventilation (PVV) System Installation – TK 50 RTS - Work Package 9. M-DCP-Z-10003, Rev. 1.

31. Saltstone Facility Consolidated Hazard Analysis (U). WSRC-TR-2001-00574, Rev. 18.

2.11 FIGURES

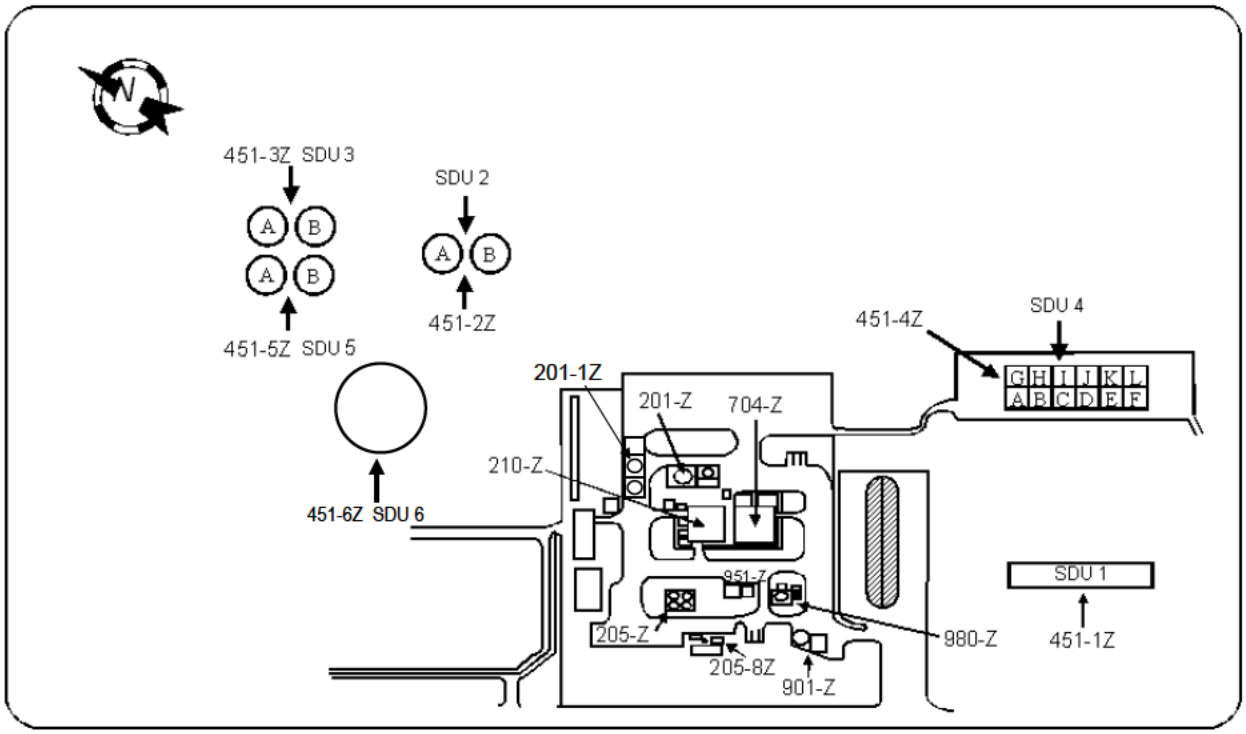

Figure 2.11-1 Z Area Map

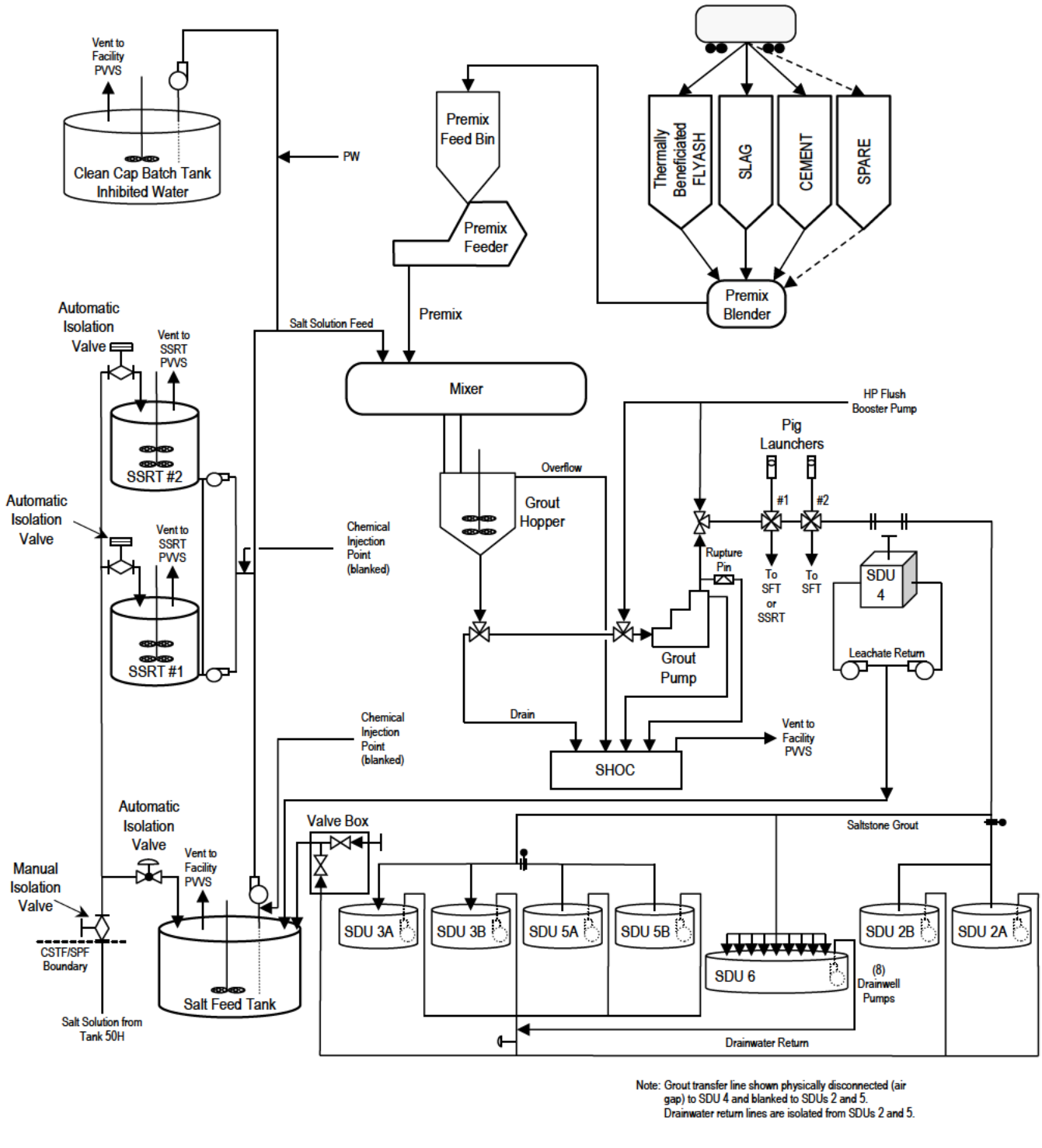

Figure 2.11-2 Simplified Process Diagram

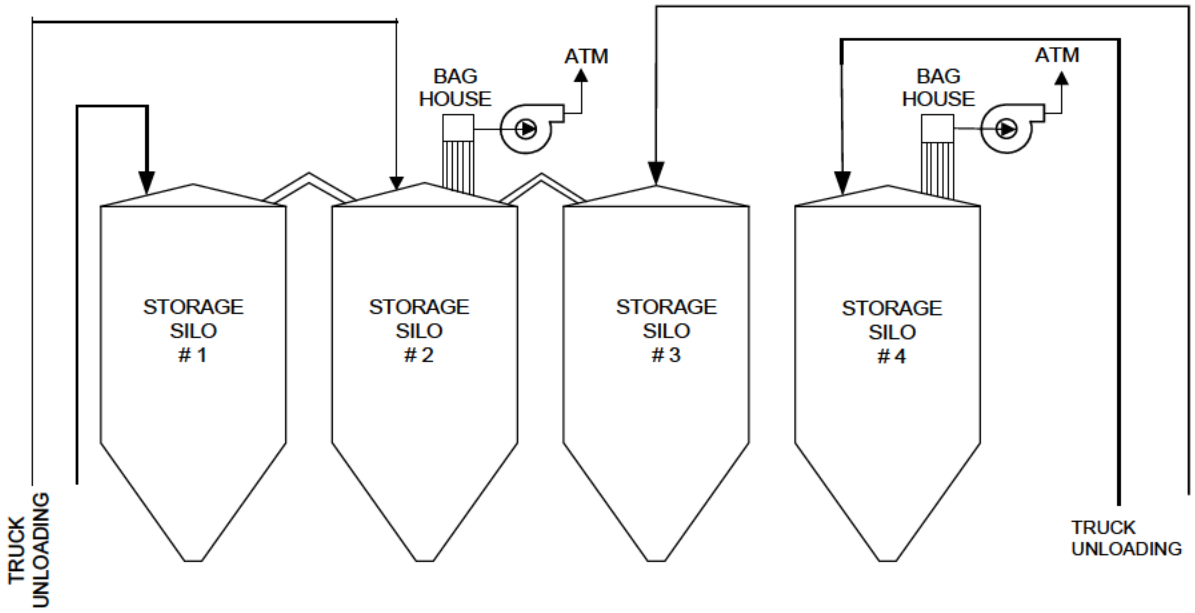

Figure 2.11-3 Bulk Material Unloading

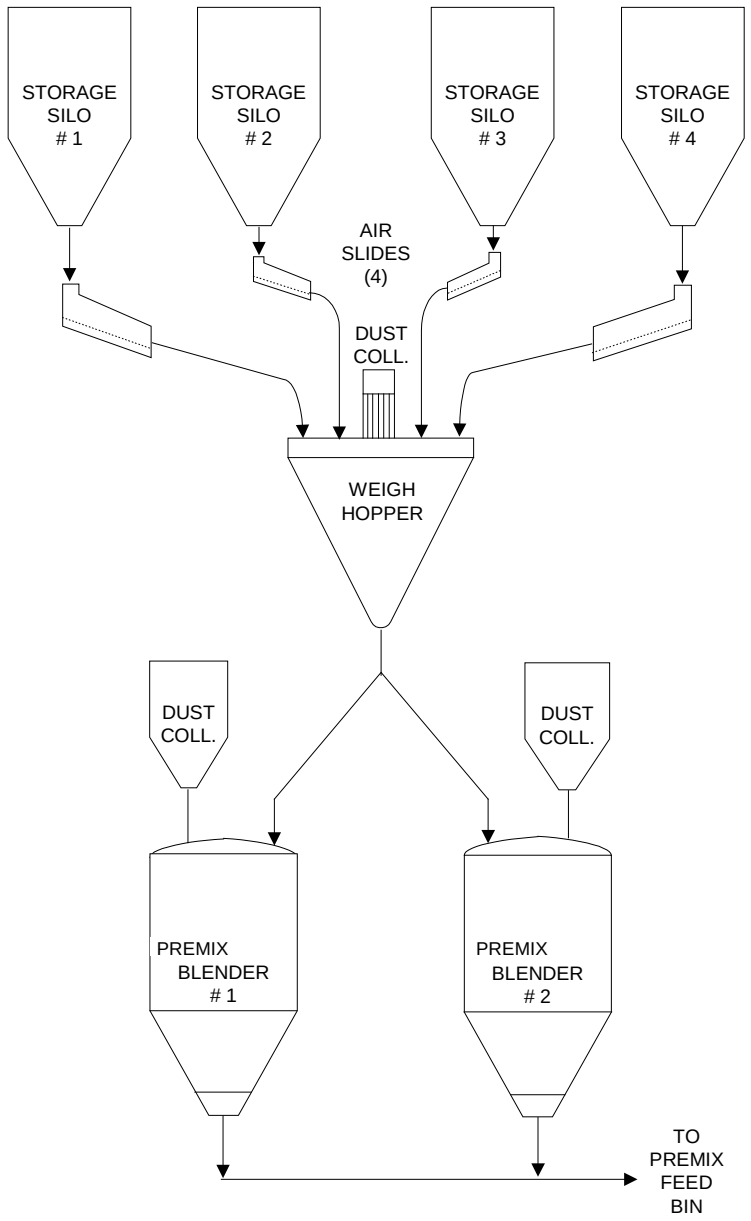

Figure 2.11-4 Premix Blending and Conveying

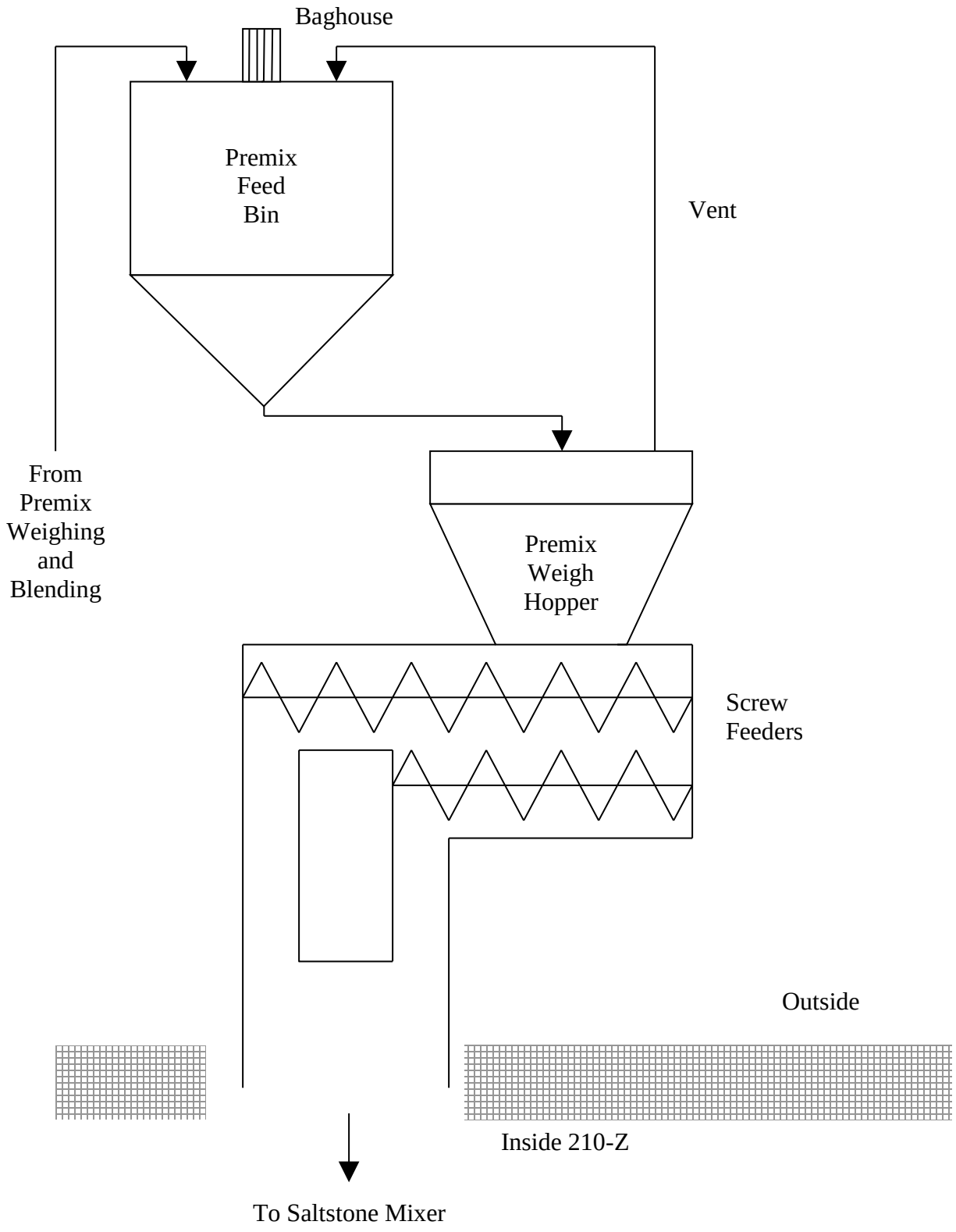

Figure 2.11-5 Premix Feeder System

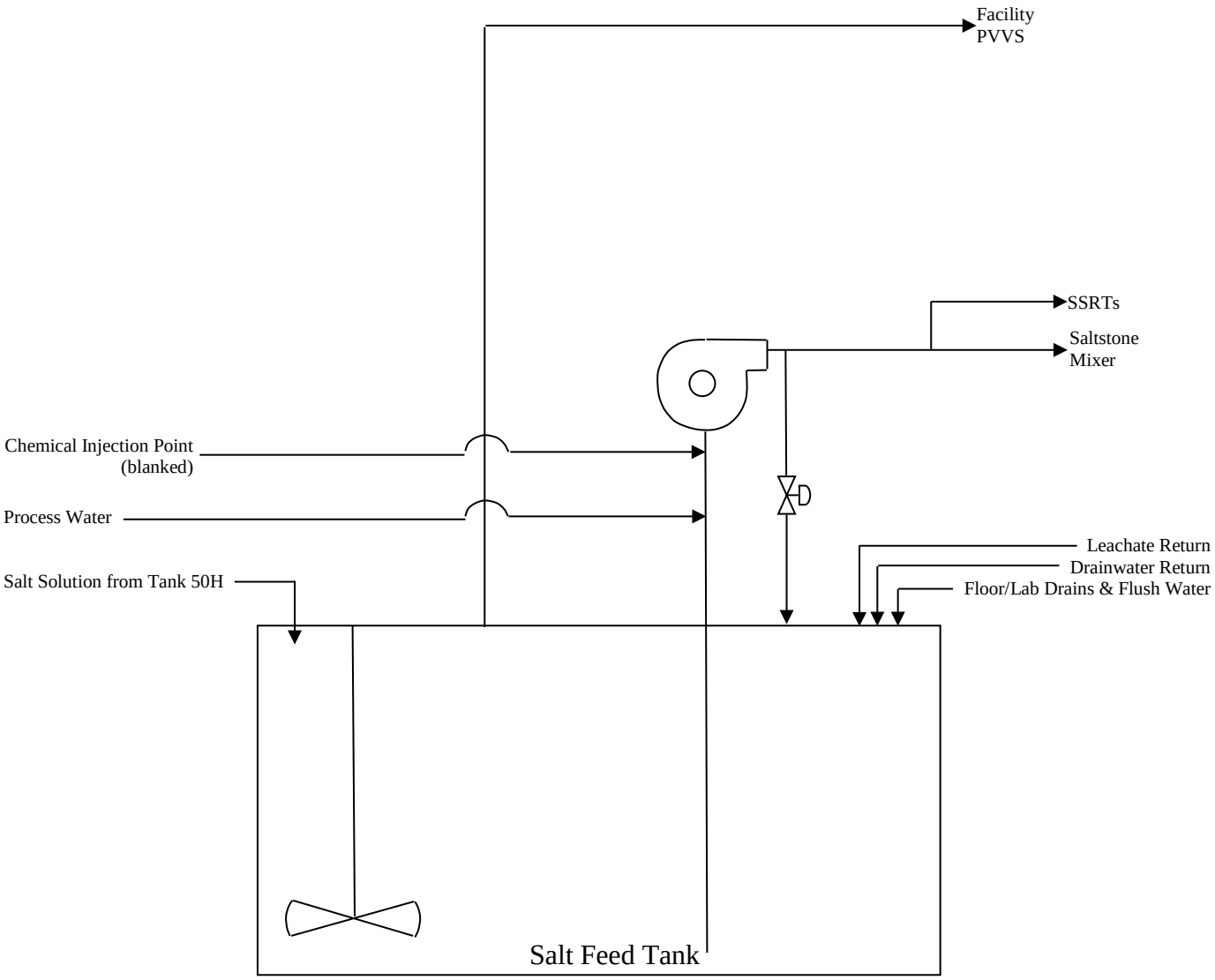

Figure 2.11-6 Salt Feed Tank

Figure 2.11-7 Deleted

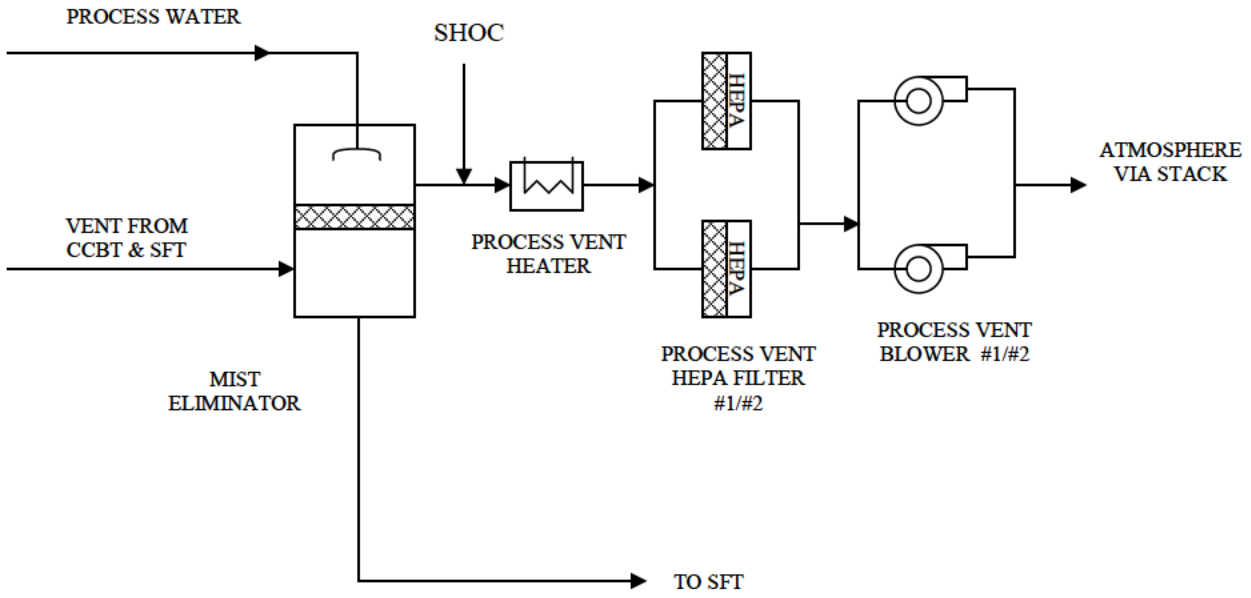

Figure 2.11-8 Facility Process Vessel Ventilation System

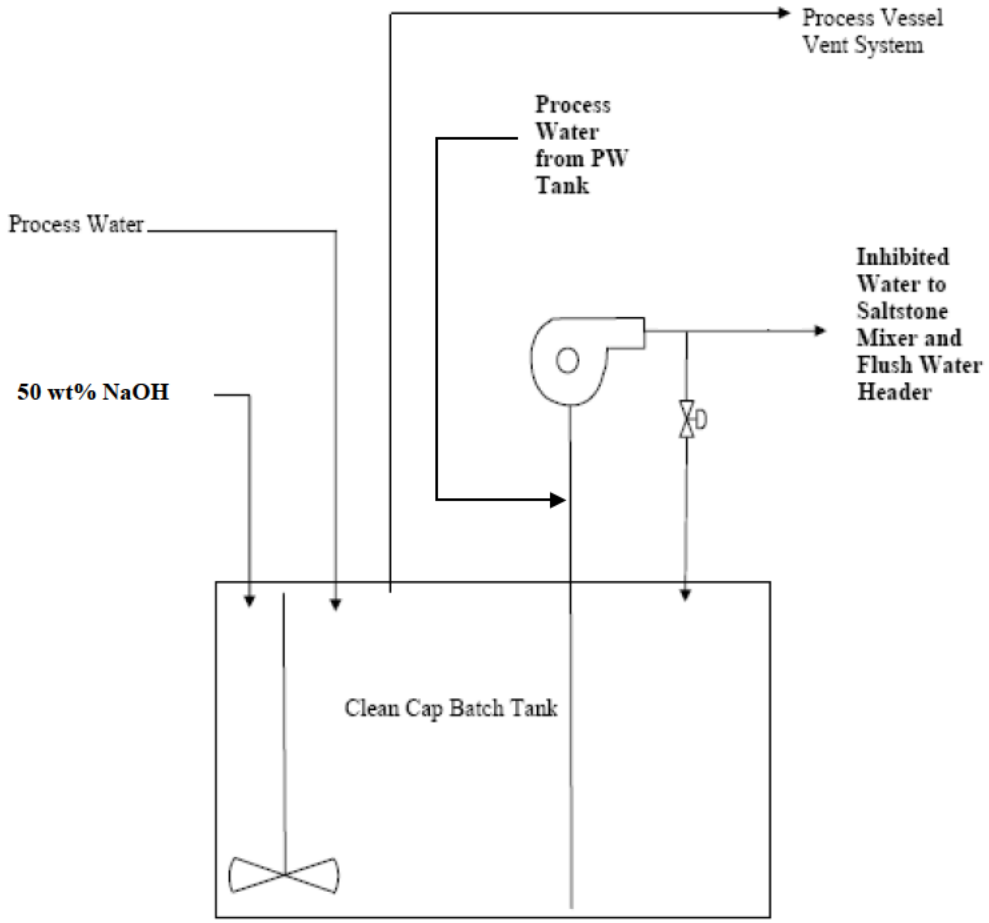

Figure 2.11-9 CCBT Inhibited Water System

Figure 2.11-10 Deleted

Figure 2.11-11 Deleted

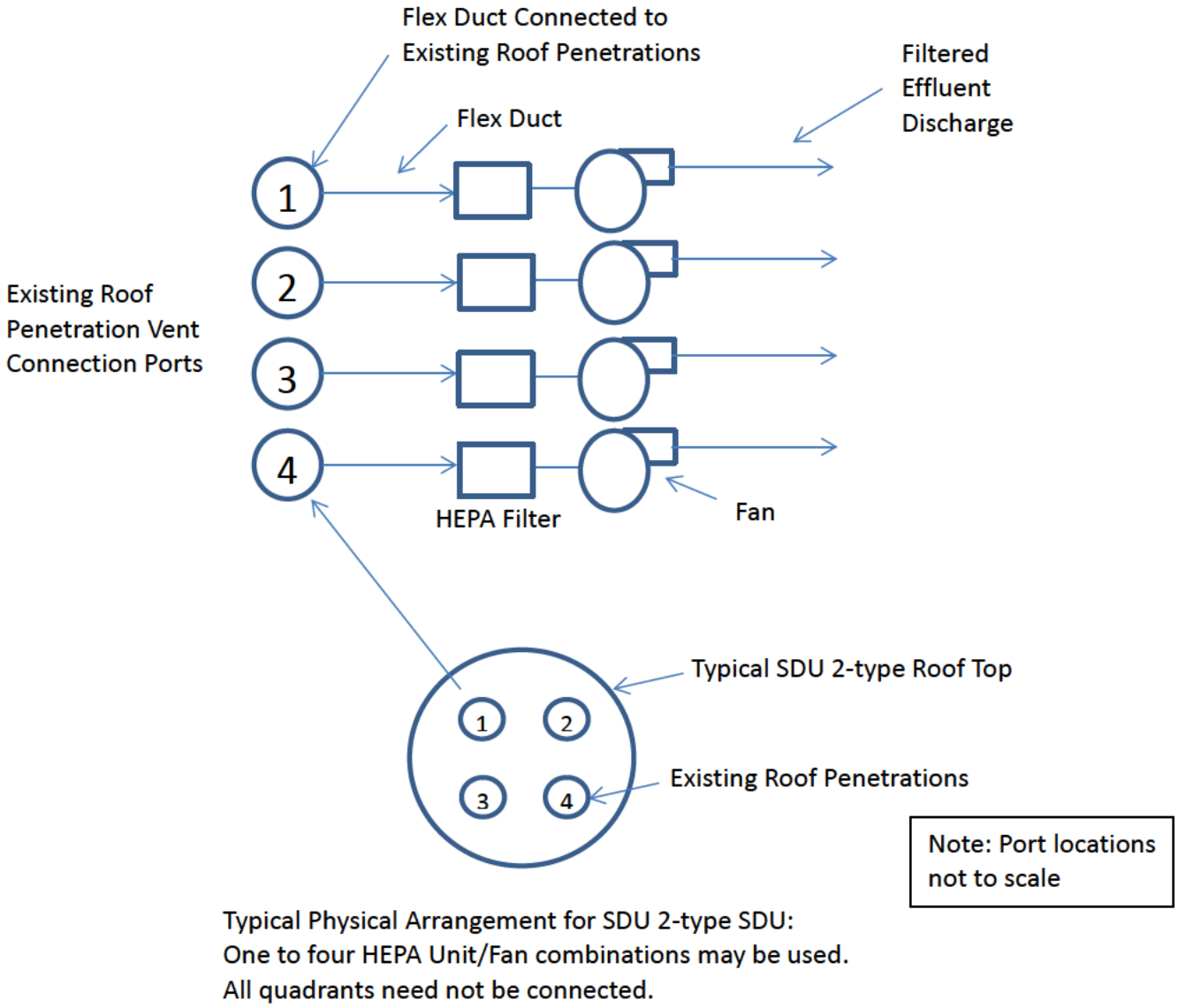

Typical Physical Arrangement for SDU 2-type SDU:
One to four HEPA Unit/Fan combinations may be used.
All quadrants need not be connected.

Figure 2.11-12 SDU Portable Ventilation System
(SDU 2-type arrangement)

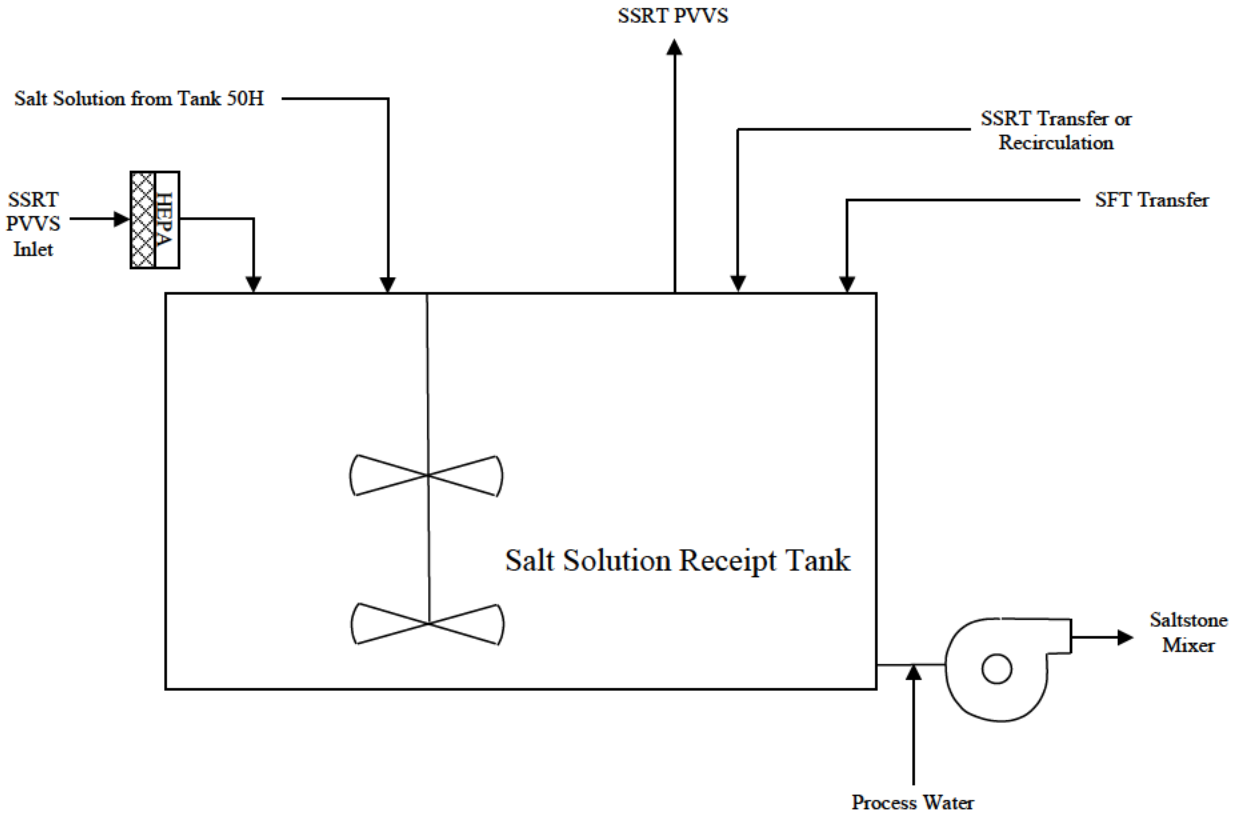

Figure 2.11-13 Salt Solution Receipt Tank

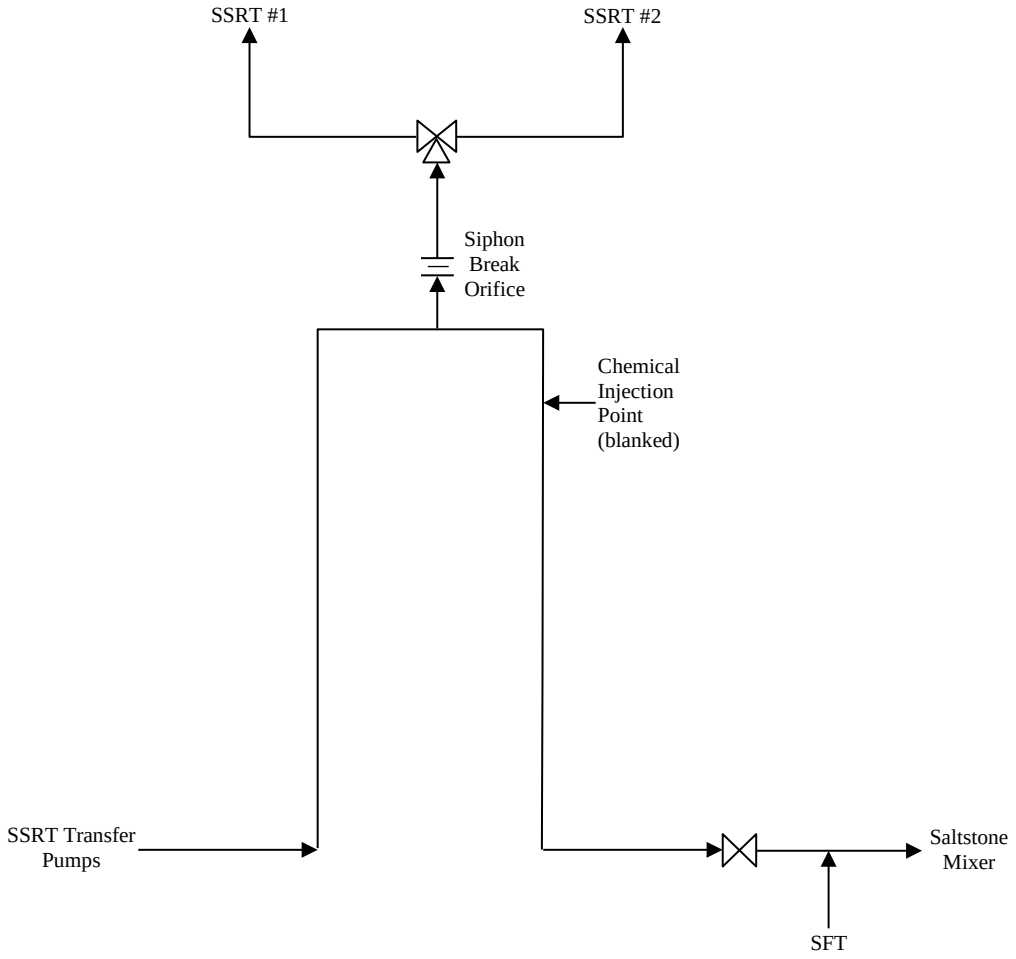

Figure 2.11-14 SSRT Gravity Drain Pipe Loop with Siphon Break Assembly

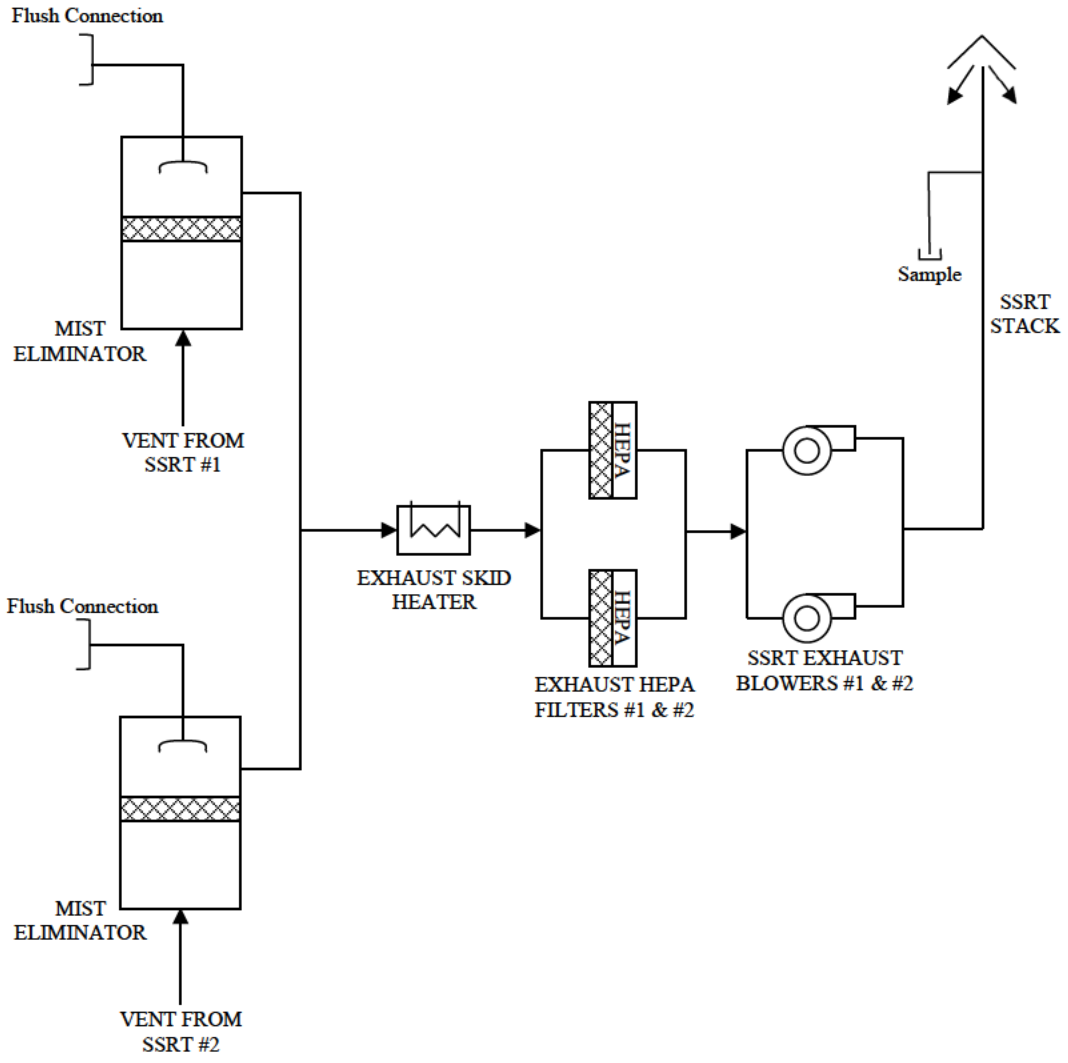

Figure 2.11-15 SSRT Process Vessel Ventilation System

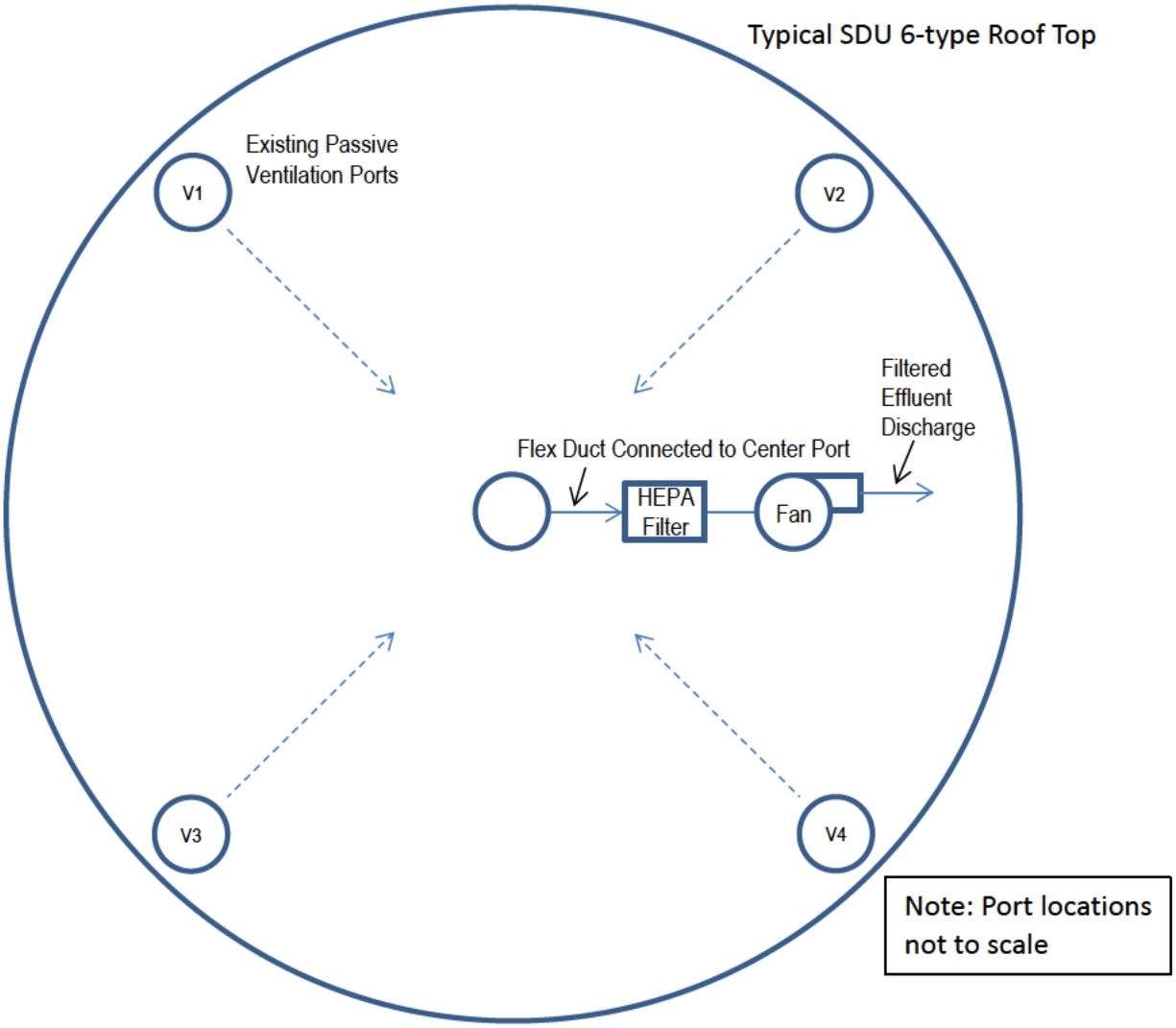

Figure 2.11-16 SDU Portable Ventilation System
(SDU 6-type arrangement)

SALTSTONE FACILITY

DOCUMENTED SAFETY ANALYSIS

CHAPTER 3

HAZARD AND ACCIDENT ANALYSES

Revision 15

July 2018

TABLE OF CONTENTS

Page

3.0 HAZARD AND ACCIDENT ANALYSES 3-1
3.1 INTRODUCTION 3-1
3.2 REQUIREMENTS 3-1
3.3 HAZARD ANALYSIS 3-1
3.3.1 Methodology 3-2
3.3.1.1 Hazard Identification 3-2
3.3.1.2 Hazard Categorization 3-3
3.3.1.3 Unmitigated Hazard Analysis 3-4
3.3.1.4 Mitigated Hazard Analysis 3-8
3.3.2 Hazard Analysis Results 3-9
3.3.2.1 Hazard Identification 3-10
3.3.2.2 Hazard Categorization 3-16
3.3.2.3 Hazard Evaluation 3-16
3.4 ACCIDENT ANALYSIS 3-28
3.4.1 Methodology 3-28
3.4.1.1 Source Term Analysis 3-28
3.4.1.2 Consequence Analysis 3-30
3.4.1.3 Comparison to Guidelines 3-31
3.4.2 Design Basis Accidents 3-32
3.4.2.1 Tornado/High Wind Event 3-32
3.4.2.2 Seismic Event 3-41
3.4.3 Beyond Design Basis Accidents 3-43
3.5 REFERENCES 3-45
3.6 TABLES 3-52

TABLES

Page

3.6-1 Frequency Evaluation Levels 3-52
3.6-2 Consequence Evaluation Level for Hazard Receptors 3-53
3.6-3 Deleted 3-54
3.6-4 Risk Criteria Matrix – Public, Collocated and Facility Worker 3-55
3.6-5 Deleted 3-56
3.6-6 Salt Solution Radionuclide Waste Stream Summary 3-57
3.6-7 Salt Solution Chemical Concentrations for Consequence Determination 3-58
3.6-8 Deleted 3-61
3.6-9 Deleted 3-61
3.6-10 Deleted 3-61
3.6-11 Deleted 3-61
3.6-12 Deleted 3-61
3.6-13 Saltstone Defense In Depth / Important-to-Safety 3-62

3.0 HAZARD AND ACCIDENT ANALYSES

3.1 INTRODUCTION

This chapter describes the process used to systematically identify and assess the hazards associated with the Saltstone Facility in order to evaluate the potential internal, external, and natural phenomena events that can cause identified hazards to develop into accidents. This chapter covers the topics of hazard identification, hazard categorization, HA, and accident analysis.

3.2 REQUIREMENTS

The content, format, and graded approach guidelines for the hazard and accident analyses presented in this chapter have been specifically developed in accordance with requirements of the following codes, standards, and regulatory documents:

- Title 10 CFR Part 830, Nuclear Safety Management, Subpart B, Safety Basis Requirements (Ref. 1)
- DOE Order 420.1C, Facility Safety (Ref. 131)
- DOE-STD-3009-94, Preparation Guide for U.S. Department of Energy Nonreactor Nuclear Facility Documented Safety Analyses (Ref. 2)
- DOE-STD-1189-2008, Integration of Safety into the Design Process (Ref. 132)
- DOE-STD-1027-92, Hazard Categorization and Accident Analysis Techniques for Compliance with DOE Order 5480.23 Nuclear Safety Analysis Reports (Ref. 3)
- DOE-HDBK-3010-94, Airborne Release Fraction/Rates and Respirable Fractions for Nonreactor Nuclear Facilities (Ref. 38)
- S/RID, SRR-RP-2009-00558 (Ref. 5)

3.3 HAZARD ANALYSIS

This section describes the Consolidated Hazard Analysis (CHA) performed for the Saltstone Facility (Ref. 6, 112, 123, 134, 142). The CHA is the initial analytical effort and systematically presents an analysis of potential process-related, natural phenomena, and external hazards that can affect the public, the workers, and the environment due to single or multiple failures. This analysis considers the potential for both equipment failure and human error.

The CHA provides a thorough, predominantly qualitative evaluation of the spectrum of risks to the public, the workers, and the environment due to accidents involving the hazards identified. It consists of four basic analytical activities: hazard identification, hazard categorization, unmitigated hazards analysis and mitigated hazards analysis. DOE-STD-3009-94 requires that the CHA comprehensively identify potential events, event initiators, and dominant scenarios; estimate their frequencies and consequences; identify prevention and mitigation features; and present the results in a risk matrix (Ref. 2). Consequences and frequencies are determined in the CHA such that attention is focused on

those scenarios that are of greatest concern (i.e., highest risk). Additionally, Design Basis Accidents (DBAs) are required to be identified.

The Saltstone Facility CHA was performed by integrated multidisciplinary teams and is documented in the Saltstone Facility CHAs (Ref. 6, 112, 123, 134, 142).

The CHA for the Saltstone Facility has been revised several times since its initial issuance to accommodate facility modifications and newly identified hazards. Since the inception of the Consolidated Hazards Analysis Process (CHAP) (Ref. 37), guidance (e.g., risk schemes) has changed to reflect updated DOE requirements. The basic fundamentals of the CHA process are presented in this section and the associated controls selection criteria matrices are presented in Table 3.6-4. Revisions to the CHA process that were incorporated in CHAs (Ref. 6, 112, 123, 134, 142) contain the specific details of the methodology utilized and the specific controls selection criteria matrices that are applicable.

3.3.1 METHODOLOGY

Section 3.3.1.1 presents the methodology used to identify and characterize hazards. Section 3.3.1.2 presents the methodology used to categorize the Saltstone Facility. The methodology for the unmitigated hazard analysis is described in Section 3.3.1.3. The mitigated hazard analysis methodology is described in Section 3.3.1.4.

3.3.1.1 Hazard Identification

Potential hazardous energy and hazardous material sources for the Saltstone Facility were systematically identified during the CHA. Information for identifying the hazardous energy and hazardous material sources was obtained from historical documentation. Examples include but are not limited to the Process Hazards Reviews (PHR), system design descriptions, design drawings, facility walkdowns, facility operating history reviews, and consultations with facility personnel.

Data on all of the hazardous materials used or produced in a process is the foundation of all hazard identification efforts. To perform the CHA, quantities of specific radionuclides and hazardous chemicals and their bounding concentrations were obtained. Sources of information on hazardous material include process or system design descriptions, Material Safety Data Sheets (MSDS), published sources of chemical data, federal and state legislation and regulations, facility engineering, industrial hygienists, and radiological controls personnel.

The hazard identification process provides the information required to perform the unmitigated hazard analysis. In addition, the process identifies standard industrial hazards (SIHs) and routinely accepted hazards. Per DOE-STD-3009-94, SIH are hazards that are routinely encountered in general industry and construction, and for which national consensus codes and/or standards (e.g., Occupational Safety and Health Administration (OSHA), transportation safety) exist to guide safe design and operation without the need for special analysis and/or operational parameters (Ref. 2). SIHs are identified only to the degree that they can be a contributor to a significant uncontrolled release of hazardous material or be major energy sources. The following characteristics are used to determine hazards that are SIHs and routinely accepted hazards:

- The hazard is routinely encountered first-hand by the general public in the home, home workshop, or public areas.
- Public consensus standards exist to control the hazard.
- No evidence exists that there are public or employee concerns about the hazard beyond normal prudence.
- The hazard is controlled by OSHA regulations or one or more national consensus standards (e.g., American Society of Mechanical Engineers [ASME], American National Standards Institute [ANSI], NFPA, Institute of Electrical and Electronics Engineers, Inc. [IEEE], and National Electrical Code [NEC]), where these standards are adequate to define special safety requirements, unless in quantities or situations that initiate events with serious impact to the public, workers, or environment.
- Hazards such as noise, electricity, flammable materials, welding operations, small quantities of chemicals that would likely be found in homes or general retail outlets, and hazardous materials transported on the open road in Department of Transportation (DOT) specification containers are considered to be SIHs encountered in everyday life.

Protection against industrial hazards and routinely accepted hazards is provided by practicing basic safety in the workplace. Such hazards are formally and systematically treated by the following programmatic elements:

- Procedure Manual 8Q defines basic site-wide safety policies and minimum requirements (Ref. 34). This procedure manual is augmented by detailed rules and procedures developed by departments and facilities for activities within their areas of responsibility and require compliance with DOE Orders and OSHA regulations, at a minimum, for industrial safety.
- Industrial safety involves the detection, mitigation, management, and prevention of workplace hazards to protect against accidental death, injury, property damage, or interruption of production. The operating philosophy at the SRS is that the safety and health of employees are the first and utmost priority. Policies are implemented at the facility level through facility-level procedures.
- During facility operation, several programs ensure the timely identification of industrial hazards. These programs include OSHA compliance reviews, routine safety audits and periodic safety inspections, incident investigations (formal reviews and assessments of any unsafe situation or incident), annual safety program reviews, monthly safety meetings, safety suggestion programs, and the SRS Quality Assurance Program (QAP).

3.3.1.2 Hazard Categorization

The objective of facility hazard categorization is to evaluate the potential radiological hazards associated with the Saltstone Facility in order to determine the safety and health documents required for the Saltstone Facility. Hazard categorization was developed in accordance with

the guidance provided in 10 CFR 830, DOE-STD-1027-92, and the 11Q Manual (Ref. 1, 3, 35).

The radiological inventory that can be physically released was compared against the Threshold Quantities (TQs) identified in DOE-STD-1027-92 to determine the facility radiological hazard categorization (Ref. 3).

In addition, the potential for a nuclear criticality was investigated (Ref. 49).

3.3.1.3 Unmitigated Hazard Analysis

The unmitigated hazard analysis process provides the detailed information that allows the development of specific events and scenarios associated with a hazardous release and the estimation of their frequency and consequences. The HA is performed in accordance with the requirements of DOE-STD-3009-94, the Procedure Manual 11Q, and the Consolidated Hazards Analysis Process (CHAP) Methodology Manual (Ref. 2, 35, 37).

The Hazard and Operability (HAZOP) analysis methodology was the technique chosen to conduct the unmitigated hazard analysis. HAZOP, the primary evaluation tool used by the CHAP to identify potential hazardous situations, provides a systematic way to examine how process variations (deviations), such as equipment failures, process upsets, and human errors affect a system (Ref. 37). HAZOP was selected because the methodology focuses on specific points in the process (nodes) and identifies single level initiators for potential accidents and cases of concern that involve concurrent failure. The “What-if” approach was also utilized to determine additional situations that could occur and impact the process. This approach is primarily utilized for events such as NPH events (earthquake, tornado, high winds, flood, etc.) and external impact (vehicle, crane, etc.).

Based on the node and deviation, causes or reasons why the deviation might occur were identified. Causes may be hardware failures, human errors, unanticipated process states (e.g., change of composition), external disruptions (e.g., loss of cooling water), etc. By identifying the cause(s) of the postulated event, the team was able to determine the initiating frequency and achieve an understanding of preventive and mitigative features.

Based on the node, deviation, and cause, event results were determined. Results could include a release of hazardous energy and/or material, personnel injuries, loss of equipment or facilities, loss of production, or none. If a result was determined to be an SIH, the event was documented as such.

The unmitigated event frequencies were determined for credible internal events, as defined in Manual E7, Procedure 2.25 (Ref. 41), Attachment 8.8. The frequency of external events, which are more frequent than 1E-6 evaluated conservatively or 1E-7 evaluated realistically, and NPH events are defined by DOE-STD-1020 (Ref. 130). Events that are deemed not credible receive no frequency.

Manual E7, Procedure 2.25 (Ref. 41) provides clarification of the evaluations related to NPH events as defined in DOE-STD-1020 (Ref. 130) and provides criteria to be applied to DOE facilities and equipment based on the PC determined in accordance with DOE-STD-1021

(Ref. 133). There is no requirement to address all NPH events that could occur having a frequency greater than Beyond Extremely Unlikely (BEU). Only the NPH events defined in DOE-STD-1020 need to be considered.

Thus, for external and credible internal events, the unmitigated event frequency was determined through a qualitative and/or semi-quantitative process that involved assigning a frequency level to each event that could result in a release of hazardous energy and/or material. Frequency levels and descriptions, which are based on the SRS CHAP Methodology Manual, are outlined in Table 3.6-1 (Ref. 37). An appropriate frequency level for each postulated event was determined based on the event's cause(s).

Radiological and chemical consequences are documented by specifying the impact on the Public and worker receptors (described below). Unmitigated consequences are defined as the dose or exposure at specified receptor locations that have been determined without taking credit for barriers or controls, which could reduce the consequences. When evaluating event consequences, credit may be taken for items identified as initial conditions. Consequences are a function of the type and characteristics of the hazard, the quantity released, the release mechanism, relative location of the release, and any relevant transport characteristics.

Consequence evaluation is the process of determining the consequences to the Public and workers for a particular release event. Table 3.6-2 gives the radiological and chemical consequence levels for the specified receptor locations. Receptors are as follows:

Facility Worker	FWs are workers immediately adjacent to, or in, the occupied area of the hazard. "Occupied area of the hazard" refers to the area within the last possible means of physically controlling the hazard or controlling access to the hazard (i.e., building, fence, permanent chain with multiple warning signs).
Collocated Worker	CWs are workers outside the occupied area of the hazard. If there is no defined physical means of controlling the hazard or controlling access to the hazard, the location is assumed to be at the worst possible location, but no closer than 100 meters to the hazard. For this analysis, the CW consequences were qualitatively determined from the dose at 100 meters.
Offsite	Offsite receptors are the Public or everyone outside the site boundary at the time of the event; MOI. For this analysis, Public receptor consequences were qualitatively determined from the dose at 10 kilometers.

The unmitigated hazard analysis was concerned with the MOI at each of the receptor locations.

A quantitative or qualitative assessment was performed to determine the CW and Public radiological consequences for each event. In the assessment for the Saltstone Facility process, estimates of the potential radiological doses were based on the amount of radiological material that is available for release and subsequently becomes airborne. The airborne Source Term

(ST) for each event was estimated by the following equation which is further discussed in Section 3.4.1.1 (Ref. 38):

ST = MAR * DR * ARF * RF * LPF

Where:

ST	=	Source Term
MAR	=	Material at Risk
DR	=	Damage Ratio
ARF	=	Airborne Release Fraction
RF	=	Respirable Fraction
LPF	=	Leak Path Factor

The MAR is the amount of inventory assumed available to be acted upon by the event. The actual amount of material assumed to be affected by the event is represented by the product MAR * DR, where DR is the fraction of the MAR actually impacted by the event. The ARF and RF values were obtained from DOE-Handbook (HDBK)-3010-94 and are based on the release mechanism and the material form (Ref. 38). The product of ARF * RF represents the fraction of the material impacted that becomes airborne and is respirable during the initial release. The DR and LPF are conservatively assumed to be 1.0 for all releases in this analysis.

The Total Effective Dose (TED) associated with an atmospheric release of a single gallon (gal) of salt solution was calculated for the offsite receptor. This was performed using Version 2 of MELCOR Accident Consequence Code System 2 (MACCS2) (Ref. 95).

MACCS2 predicts dispersion of radionuclides by the use of multiple, straight-line Gaussian plumes (with Tadmor-Gur set of dispersion coefficients). Although each plume treats the released material as a neutrally buoyant gas, the direction, duration, sensible heat, and initial radionuclide concentration may be varied from plume to plume. Cross-wind dispersion is treated by a multi-step function and both wet and dry depositions features can be modeled as independent processes. Meteorological variability is treated with a stratified random sampling algorithm.

Recommended from Reference 132, the Offsite radiological/chemical consequence determination was based on the guidance of Reference 2 with a surface roughness of 160 cm from Reference 147 and represents 95th percentile results based on a statistical treatment of site meteorological data (Ref. 150).

Accident analysis calculations utilize the DOE-STD-1189 criteria for determining consequences for the Onsite receptor. Namely, the unit TED factor for the CW (100 meter) is calculated using the DOE-STD-1189, Appendix A (Ref. 132) atmospheric dispersion (χ/Q) value of 3.5E-03 s/m^3 for all accident release periods. Use of DOE-STD-1189 χ/Q value as a basis for consequence evaluation serves the dual functions of protecting worker safety and standardizing the hazard index so that SS controls are based on inventory and MAR rather than special

analysis techniques, facility features, or unique physical plant conditions. Assessment of accident doses using Gaussian dispersion (computed with the DOE-STD-1189 χ/Q) requires use of inhalation Dose Conversion Factors (DCFs) for the CW. For a workplace population, International Commission on Radiological Protection (ICRP) Publication 68 (Ref. 144) recommends a particle size of 1 μm or 5 μm Activity Median Aerodynamic Diameter (AMAD) (latter judged to be more representative of workplace aerosols). In all unfiltered cases for the CW, the 5 μm AMAD particle distribution is considered the default value and is used for selecting an inhalation DCF for the CW, which historically has been used in the Saltstone Facility consequence calculations.

The TED provides a rem-per-gallon conversion for salt solution at specified distances and release durations. Impact, explosion, and leak events were assumed to have a 3-minute release duration and fire events were assumed to have up to a 20-minute duration. The radiological release mechanism for fire is heating, boiling, and boiling to dryness of the aqueous salt solution. The appropriate rem-per-gallon conversion is then multiplied by the ST to give the radiological dose consequences for a specific event. These final doses were then compared against the criteria given in Table 3.6-2 to assign the consequence level of High, Moderate, Low, or Negligible.

Similarly, the release concentrations for chemicals were calculated per the methodology identified in Section 3.4.1.2 for the identified ST and then compared against the criteria given in Table 3.6-2 to assign the consequence level of High, Moderate, Low, or Negligible.

Accident consequences for the FW for a number of events were qualitatively estimated based on the judgment and expertise of the analysis team (Ref. 2, 41).

Using event frequency and unmitigated consequence levels, events were “binned” in frequency-consequence space to assess relative risk. The objective of risk binning is to focus attention on those events that pose the greatest risk to the Public and workers. Higher risk events might be candidates for additional analysis and/or functional classification evaluation (Ref. 41). The version and revision of Reference 41 (Manual E7, Procedure 2.25) is specified in the individual CHAs. Once the unmitigated event frequency and consequence level were estimated, events were located on the appropriate Risk Criteria Matrix for the Public, CW, or FW, as shown in Table 3.6-4.

Risk ranking criteria (frequency and consequence determination) is based on Manual E7, Procedure 2.25 which identifies the method of evaluating process related internal events for functional classification purposes. DOE-STD-3009 states:

> "There is no pre-determined frequency cutoff, such as 1E-6 per year for excluding low-frequency operational accidents (i.e., internally initiated). In fact, for operational accidents, there is no need for a frequency component to the unmitigated release calculations, since the determination of need is solely driven by the bounding consequence potential."

Thus, functional classification is performed for all credible process related internal events based solely on consequences, regardless of frequency, as shown in Table 3.6-2. Credible external

man-made events with a frequency of $<10^{-6}$/yr as conservatively estimated, or $<10^{-7}$/yr as realistically estimated fall into Region C. NPH events are evaluated at the frequency specified by DOE-STD-1020. Any event that is not deemed credible receives no risk ranking. These events do not require controls, unless they are in the form of initial conditions.

Table 3.6-4 is the Risk Criteria Matrix for Controls Selection for the Public, CW and FW. Events that pose a considerable risk to the Public (Region A1, A2 or A3 events for offsite) and to the CW and/or FW (Region A1, A2 or A3 events for CW and/or FW) are required to be analyzed further in Section 3.4, Accident Analysis, to determine if Safety Class (SC) and/or SS SSCs and programmatic and/or Specific Administrative Controls (SACs) are needed to protect the Public, CW or FW (Ref. 41). Events that fall into Region B for the Public and/or CW and/or FW receptors do not require SS SSCs or ACs, but were conservatively carried forward to the mitigated hazard analysis to address facility controls. Events that fall into Region C for any of the receptors have no further discussion in this DSA.

3.3.1.4 Mitigated Hazard Analysis

The mitigated hazard analysis is performed for those events with a risk rank of A1, A2, A3 or B1 due to a radiological or chemical release.

Development of the mitigated hazard analysis control strategy begins with the treatment of Region A and B events. Target frequency and consequence reductions are first established as shown in Table 3.6-4 for the Offsite, CW and FW. Rules of thumb are then applied to estimate the frequency/consequence reductions, and results are compared against targets (i.e., determine if the controls move the mitigated frequency/consequence well into Regions B and C of the Risk Criteria). Controls are then selected from among those potentially available and credited against the event. This leads to the specification of SC, SS, and Defense in Depth (DID) controls consistent with Manual E7, Procedure 2.25 (Ref. 41).

Results are compiled and documented in the mitigated hazard analysis tables in the CHA (Ref. 6, 112, 123, 134, 142). In all cases, the evaluation must select controls to ensure that the risk does not challenge the applicable risk criteria before the event is placed into the lower region.

Since Region C events generally have Negligible consequences and are well below the risk criteria, mitigated hazard analysis/control strategy development activities were not conducted.

The results of the mitigated HA are documented in the mitigated hazard analysis tables in the CHA (Ref. 6, 112, 123, 134, 142). The causes, results, unmitigated frequency, unmitigated consequences, and unmitigated risk rank are carried forward from the unmitigated hazard analysis table. The credited controls, mitigated frequency, mitigated consequences and mitigated risk rank are added to the mitigated hazard analysis table as described below:

Credited Controls

SC, SS, DID, or facility controls credited during the mitigated hazard analysis are annotated in the Credited Controls column of the mitigated hazard analysis tables in the CHA (Ref. 6, 112, 123, 134, 142).

Table 3.6-13 lists DID/Important-to-Safety (ITS) hazard controls. These were selected from the suite of controls in the supporting hazards analyses. No specific credit is given to these controls insofar as event frequency or consequence reduction, nor is any margin of safety assigned to these controls. However, by being listed in Table 3.6-13, the facility commits to ensuring that each additional DID hazard control is installed. Additionally, since these controls are not included in the Technical Safety Requirements (TSR), facility operations may continue with these additional DID hazard controls temporarily out of service as permitted and managed by existing site procedures, facility procedures, and safety management programs.

Frequency Level - Prevented

The initiating frequency level of the event (from the unmitigated hazard analysis tables) is modified with the reductions due to credited preventive features. The amount of frequency reduction is dependent on the control(s) and is documented in the Notes field of the mitigated hazard analysis table. When a preventive control strategy is selected for unmitigated events, there is not an absolute requirement to make the mitigated event BEU. If the control strategy meets all the engineering requirements for its classification [SC for Public (radiological) and SS for Public (chemical) or workers], it is acceptable even if the event frequency is not BEU. The desired result is that the event is prevented or the mitigated consequence is moved well into the B region, and possibly the C region by the addition of Facility Controls.

Mitigated Consequence Level

The unmitigated consequence level of the event (from the unmitigated hazard analysis tables) is modified with the reductions due to credited mitigative features. The amount of consequence reduction is dependent on the control(s) and is documented in the Notes field of the mitigated hazard analysis table. Mitigated consequence levels are assigned per Table 3.6-2.

Mitigated Risk Rank

Based on the Prevented Frequency Levels and the Mitigated Consequence Levels, the events are binned in the same manner as during the unmitigated analysis. The final risk bin determined in this manner is used to demonstrate that the prevention and mitigation features selected reduce the event risk to well below the established risk criteria.

3.3.2 HAZARD ANALYSIS RESULTS

This section provides a discussion of the results of the CHA. Section 3.3.2.1 presents the results of the hazard identification activity; Section 3.3.2.2 presents the results of the final hazard categorization activity; and Section 3.3.2.3 outlines the results of the hazards evaluation activities.

3.3.2.1 Hazard Identification

3.3.2.1.1 Radionuclides and Hazardous Chemicals

The results of the hazard identification activity determined that radioactive salt solution is the only hazardous material present in a significant quantity in the Saltstone Facility. Salt solution bounding radionuclide concentrations are shown in Table 3.6-6. The associated chemical concentrations are shown in Table 3.6-7 (Ref. 88).

The SDF is permitted by SCDHEC as an industrial waste landfill that is used only for the disposal of non-hazardous solid waste (e.g., saltstone and failed process equipment from the SPF). The solid saltstone provides primary containment for radionuclides and chemicals in the waste and the SDUs provide secondary containment. After final closure activities at the SDF are completed, overlying backfill and closure caps will provide tertiary containment, consistent with all applicable regulations. In the long term, neither the saltstone grout produced in Z-Area nor the solidified saltstone contained in large concrete SDUs pose any undue hazard to the Public or to site employees (Ref. 44).

Material properties of the bulk dry materials used to process the salt solution into grout (thermally beneficiated flyash, cement, and slag) were reviewed by the CHA Process team. The review of the MSDS for the material determined that these materials present no fire or explosion hazards prior to mixing with salt solution (Ref. 45 through 47). Acute hazards resulting from the release of these materials include hazards associated primarily with nuisance dusts. There are some acute potential physiological burning hazards (skin, eyes, and mucous membranes) associated with some types of concrete. Chronic long term inhalation exposure to dry material constituents may cause fibrosis (silicosis) or chronic bronchitis. The MSDSs for thermally beneficiated flyash, slag, and cement state there is sufficient evidence for carcinogenicity of crystalline silica in humans. Although there are chronic health effects that could be considered Moderate or High for these materials, they are recognized as SIHs and are controlled through normal OSHA protocol, Job Hazards Analysis, worker safety reviews, training, pre-job briefings, and expert on-the-job industrial safety and hygiene monitoring.

The use of 50 wt% NaOH (nominal) and IW was evaluated in the CHA and recognized as an SIH (Ref. 83).

Laboratory quantities of chemicals and samples are maintained in the Saltstone Product Test Laboratory. Hazards associated with these chemicals were determined to be SIHs covered by OSHA laboratory standards.

3.3.2.1.2 Flammable and Explosive Materials

Vapors are released in the Saltstone process from salt solution and dry feeds that could result in a flammable concentration.

Flammable vapors are released from salt solution during processing at Saltstone due to hydrogen generation, formation of dimethyl mercury (DMHg), decomposition of tetraphenylborate (TPB) and tributylphosphate (TBP), and the release of volatile chemicals. Salt solution is an aqueous, radioactive solution and can produce hydrogen through various

mechanisms (see Section 3.3.2.1.3). DMHg is contained in the salt solution and may also be formed from soluble mercury in the salt solution. Benzene may be released from salt solution due to decomposition of TPB and butanol may be released due to decomposition of the TBP. In addition, salt solution from the MCU waste stream contains Isopar® L, which can be released under certain conditions to produce flammable vapor. Other volatile chemicals may also be present in salt solution from Tank 50H including ammonia, isopropanol, butanol, NORPAR™ 13, and methanol (Ref. 88).

Additional volatile chemicals may be released from dry feeds when mixed with salt solution (e.g., ammonia, benzene, toluene, and xylene). The cement and slag have the potential to release ammonia due to the grinding agents used in their production. In addition, ammonia may be produced due to reactions between slag and salt solution. Organics and ammonia may also be released from the flyash when mixed with salt solution. To minimize the release of organics and ammonia from flyash, thermally beneficiated flyash is used. Thermally beneficiated flyash is treated by an industry process in which the flyash is heated to elevated temperatures and maintained at these temperatures for a defined period of time which removes the majority of the ammonia and other organics.

3.3.2.1.3 Hydrogen Generation

The hydrogen generation rate (HGR) for grout containing salt solution is calculated using the following methods (Refs. 88 and 90).

The radiolytic HGR for a given waste depends on the radiation dose to the waste, the presence of organics, and the concentration of any hydrogen scavengers that may be present. Free ions of nitrate (NO_3) and nitrite (NO_2) are scavengers that serve to decrease the overall hydrogen gas. To account for the scavenging effect of both of these ions, NO_{eff}, equal to the NO_3 ion concentration plus one-half the NO_2 ion concentration, is introduced. During the production of Saltstone grout, reactions between NO_2 ions and slag result in a reduction in the concentration of NO_2 ions in salt solution. Therefore, the NO_{eff} shall be equal to the NO_3 concentration plus one-quarter the NO_2 ion concentration (Ref. 88).

The radiolytic HGR, x_{RAD}, at 25°C is calculated from the radioactive decay heat using the equation (Ref. 90):

$$x_{RAD}\ (ft^3/hr\text{-}gal) = (R_{\beta/\gamma}\ H_{\beta/\gamma} + R_{\alpha}\ H_{\alpha}) / 10^6$$

Where:

$R_{\beta/\gamma}$ = amount of hydrogen generated per 10^6 BTU of heat added from beta or gamma decay ($ft^3/10^6$ BTU)

$H_{\beta/\gamma}$ = heat generated by beta and gamma decay (BTU/hr-gal)

R_{α} = amount of hydrogen generated per 10^6 BTU of heat added from alpha decay ($ft^3/10^6$ BTU), and

H_{α} = heat generated by alpha decay (BTU/hr-gal)

The values of R_α and $R_{\beta/\gamma}$ are dependent on the concentration of NO_3 and NO_2 ions in the waste and are given by the equations (Ref. 88):

$$R_\alpha = 134.7 - 82.3*(NO_{eff})^{1/3} - 13.6*(NO_{eff})^{2/3} + 11.8*(NO_{eff}) + 25.48*f_{organic}$$

$$R_{\beta/\gamma} = 48.36 - 52.78*(NO_{eff})^{1/3} + 14.1*(NO_{eff})^{2/3} + 0.572*(NO_{eff}) + 54.73*f_{organic}$$

Where:

NO_{eff} = the NO_3 ion concentration plus one-quarter the NO_2 ion concentration.

$f_{organic}$ = the fraction of hydrogen radicals that react with organics to produce H_2

= 2.1E+08*[$CHOO^-$] / (2.1E+08*[$CHOO^-$] + 2.2E+07*[OH^-] + 1.4E+06*[NO_3^-] + 7.10E+08*[NO_2^-]*0.5) (concentration in mol/L)

The heat generated by alpha and beta/gamma decay is determined by the equations:

$$H_\alpha = \sum_i Q_i * A_i$$

$$H_{\beta/\gamma} = \sum_j Q_j * A_j$$

Where:

H_α = total heat generated by alpha decay

Q_i = heat generated per curie for each isotope that decays by alpha

A_i = total activity of each isotope that decays by alpha

$H_{\beta/\gamma}$ = total heat generated by beta or gamma decay

Q_j = heat generated per curie (Ci) for each isotope that decays by beta or gamma, and

A_j = total activity of each isotope that decays by beta or gamma.

Finally, the calculated radiolytic HGR is adjusted to the vapor space temperature when applied in flammability analysis. For comparison purposes with the radiolytic HGR Safety Analysis Value (SAV), the rate is adjusted to a temperature of 95°C.

The thermolytic HGR for a given waste depends on the actual waste measurements including total concentration of aluminum species, Total Organic Carbon (TOC) concentration, reactivity

of organic species, liquid weight fraction, and temperature. For conservatism, some variables have been assumed at maximum values to account for variation in actual waste measurements. Values for aluminum species and TOC are based upon individual maximum concentrations seen during prior Tank 50 sampling, with additional margin included to provide reasonable conservatism. Additionally, the reactivity coefficient for organic species and the liquid fraction are conservatively taken as 1. Calculation of thermolytic HGR, x_{THERM}, is simplified to the following equation (Ref. 88):

$$x_{THERM}\ (ft^3/hr\text{-}gal) = 1.09E{+}05 \times (T) \times e^{\frac{-10777}{T}}$$

Where:

T = temperature of the waste, in Kelvin

The overall hydrogen generation rate is the summation of the temperature corrected radiolytic HGR and the thermolytic HGR.

Measured data from filled SDUs indicates minimal flammable gases in the cell vapor spaces at the order of magnitude predicted by flammability analysis. Thermolytic hydrogen generation does not need to be further considered for previously filled SDUs (SDUs 2, 4, and 5) until the time at which additional grout is added to these cells for closure (Ref. 88).

3.3.2.1.4 Dimethyl Mercury Formation Rate

The DMHg generation rate for salt solution is calculated using the following method (Ref. 141). The amount of DMHg produced from the total mercury in the liquid is temperature dependent. Using the temperature and rate data from Ref. 88, a graph was created in Excel and the rate fit function is used to create the following equation:

$$D = \left(1.59114 \times 10^{-12} \times {T_s}^2\right) - (1.08161 \times 10^{-10} \times T_s) + (2.23153 \times 10^{-9})$$

where D = DMHg generation rate constant, 1/s
T_s = Temperature of Salt Solution, °C

This equation is used to calculate the DMHg generation rate constant. Once the rate is determined the amount of DMHg produced during a period of time can be determined using the concentration of total mercury in the salt solution.

3.3.2.1.5 Chemical Reactions

There is no danger of an uncontrolled, process-related chemical reaction in Z-Area. When the salt solution is added to a blend of slag, thermally beneficiated flyash, and cement, the principal chemical reaction that occurs is the hydration of the dry materials that leads to the formation of the solid grout. The reaction is exothermic and results of tests at SRNL provide evidence that at elevated temperatures, small amounts of organic materials and ammonia are released from the grout (Ref. 92).

50 wt% NaOH is combined with PW to generate IW, which is used for process operations and system flushes. When NaOH is added to PW, the mixing reaction that occurs is exothermic and the heat generated is absorbed in the large volume of water (Ref. 83). IW used for processing and component flushes has similar chemical properties (i.e., alkaline) to salt solution.

3.3.2.1.6 Criticality

A Nuclear Criticality Safety Evaluation (NCSE) was performed to evaluate the credibility of a criticality event due to inadvertent and intended transfers of waste salt solution from the Tank 50H valve box to the Saltstone Facility and throughout saltstone processing (Ref. 49). Various concentration mechanisms, such as precipitation, evaporation, dilution and freezing were evaluated as appropriate to determine if a credible mechanism to achieve a critical density of fissile material existed. This evaluation is summarized in Chapter 6.

In summary, the NCSE identified no credible criticality scenarios for the SPF or SDF due to the low concentration of fissile materials in the alkaline salt solutions. The evaluation of Reference 49 is valid for fissile material concentrations in salt solutions that result in fissile activity limits less than or equal to the DSA proposed limits presented in Reference 67.

3.3.2.1.7 Energy Sources

A number of mechanical and electrical sources of energy typically found in industrial facilities, such as pumps or electrical motors, were identified. These energy sources may influence accidents involving the hazardous materials listed in the preceding sections. These accidents, and the applicable energy sources, are identified in the CHA (Ref. 6, 112, 123, 134, 142).

3.3.2.1.8 Natural Phenomena Hazards

In addition to the hazards associated with normal and abnormal conditions that could be encountered during processing operations, the HAZOP Team evaluated the impact of NPH events (earthquake, tornado, high winds, flood, etc.). While high wind, fire and earthquake related physical injuries (serious injury) are considered possible, these injuries are considered SIHs.

3.3.2.1.9 Review of Past Operating History

The following sources were used to collect data on the past operational history of the Saltstone Facility:

- Site Item Reportability and Issue Management (SIRIM) (Ref. 50)
- Previous Saltstone Facility safety documentation (Justification for Continued Operation [JCO] of the SRS Saltstone Facilities)
- Discussions with facility cognizant engineers and operators

Based on this review, several incidents have been reported in the operating history of the Saltstone Facility. These incidents were minor, with some resulting in slight worker contamination; but none resulted in releases that affected the public or the environment. Events that have occurred in the operating history of the Saltstone Facility include:

Fires/Explosions

No explosions have occurred at the Saltstone Facility. Fires have occurred at the Saltstone Facility, but none have resulted in releases of hazardous materials.

Spills and Leaks

To date, three significant spills have occurred during the Saltstone Facility operations. A spill of radioactive material occurred during the shutdown and flushing of the Saltstone Facility process systems. The Saltstone Hold Tank (SHT) (now designated as the grout hopper) inadvertently overflowed, forcing approximately 200 gallons of a salt solution/grout mixture into the SHT Ventilation System scrub tank, with subsequent overflow through the process vessel vent line to the HEPA filter housings located outside the Process Building (210-Z). The resultant failure of the HEPA filter led to the contamination of the Facility Process Vessel Ventilation System blowers and about ten feet of the piping beyond the blowers. An additional 100 gallons of salt solution spilled into the Process Building (210-Z) process room and flowed through a gravity drain to the Flush Water Receipt Tank (FWRT) (now designated as the SFT). The resulting contamination from this spill was minor (Ref. 81).

A second spill occurred following an automatic shutdown initiated due to the inability to control level in the SHT (now designated as the grout hopper). During the subsequent flushing operation, a blockage in the mixer forced flush water up through the mixer into the Dry Material Premix feed chute. The feed chute, which is not designed to be water tight, leaked contaminated solution into the process room and onto the roof area. From the roof, liquid ran off the side of the building, contaminating the wall, gutter system, and asphalt paving below the gutters. The contaminated liquid was prevented from entering the storm drain system and being released to the environment. The resulting contamination levels were low but widespread (Ref. 82).

A third spill occurred when the peristaltic hose of the east side grout pump failed, filling the pump housing with grout, which eventually overflowed out the vent cap into the process room. The pump continued to run for approximately one minute. The failure of the hose is believed to have been caused by debris in the hose. The spill was confined to the process room with no grout being released to the environment (Ref. 124).

A fourth spill occurred during an attempt to run a pig through the grout line to remove liquid. Three victaulic couplings and associated piping were damaged and approximately 50 gallons of contaminated flush water was released within a Radiological Buffer Area (RBA). The cause of the failure was attributed to frozen flush water residing in the grout line prior to pig launch (Ref. 149).

Spread of Contamination

During the processing of DDA batch 3, higher than expected levels of contamination were discovered on the roof of SDU 4 in the vicinity of the passive vents on Cell D. It was determined the removal of the HEPA filters from the SDU Cell Passive Vent design allowed for this to occur (the filters were removed from the design and never installed). The HEPA filters were removed from the design based on the initial backfit analysis performed which determined the HEPA filters could prevent the credited vents from performing their safety function if the filters were to plug (Ref. 104). The resulting levels of contamination from this event were low and were limited to the SDU roof area (Ref. 99, 100). Subsequent to this event, the backfit analysis was revised to evaluate the installed filters and allow for their installation with the Structural Integrity Program ensuring the filters do not challenge the safety function of the credited vents (Ref. 105). A design change was initiated and the HEPA filters and pre-filters were installed in the passive vent housings for operational cells.

3.3.2.2 Hazard Categorization

The potential for radiological material releases and nuclear criticality in the Saltstone Facility were investigated. The Saltstone Facility was determined to be a Nuclear Hazard Category 2 (HC-2) facility. The determination is documented in the Facility CHA (Ref. 6). The additional CHAs (Ref. 112, 123, 134, 142) incorporate the most up to date radiological inventories and reconfirm the original determination.

3.3.2.3 Hazard Evaluation

The hazard analysis team examined the major process nodes of the Saltstone Facility and analyzed each to postulate hazardous situations or events.

The scope of the hazard analysis included the following:

- All major aspects of process operations, including bulk material handling, processing salt solution into grout, pumping grout to the SDU, pig launch operations, and PVVS operations.
- Natural phenomena (e.g., earthquakes, tornadoes, and straight-winds), external events (e.g., aircraft and vehicular impact), and nuclear criticality.
- Consideration of the entire spectrum of possible events for a given hazard in terms of both frequency and consequence levels.
- Facility activities or systems that pose no hazards or only pose SIHs addressed by other programs or regulations (e.g., OSHA, DOT) were examined only if a loss of control of the activity or system could result in a radiological or chemical release.
- The scope of the hazard analysis did not include willful acts such as sabotage or terrorist attack.

Unmitigated Hazards Analysis

Based on the unmitigated frequency and consequence levels determined, each credible event was binned in frequency-consequence space to assess relative risk.

In the unmitigated hazard analysis conducted for the Saltstone Facility, certain initial conditions and assumptions were made that apply to the SB of the facility. These initial conditions and assumptions included the following:

- To conservatively calculate dose and exposure consequences, it was assumed that all radioactive and chemical species that could be present in the salt solution transferred from H-Area are at concentrations that exceed actual process concentrations expected. These concentrations are higher than the nominal concentrations expected to be processed during operations, and are controlled by the Saltstone WAC. The radionuclide concentrations used as the basis for STs in the radiological consequence dose analysis are presented in Table 3.6-6. The radionuclides listed in Table 3.6-6 are those radionuclides that contribute greater than or equal to 0.10% of the Inhalation Dose Potential. Chemical concentrations are listed in Table 3.6-7. The chemical concentrations were originally based on Reference 67, but have been revised where appropriate to reduce the concentrations of the given chemicals as shown in Reference 88. The chemical concentrations used as the basis for the consequences in the exposure analysis are thus equal to or greater than the chemical concentrations presented in Table 3.6-7. These concentrations are judged to be sufficiently conservative to account for the fact that the salt solution has minor constituents that are not specifically accounted for [i.e., small quantities (less than detection limits in liquid samples) of trace constituents] and/or has slight variations in the compound forms which the chemical constituents may take at a particular point in time. Effects on ST is marginal and further action is not required for these minor constituents.
- The Saltstone Facility WAC Program is assumed to protect limits on inhalation dose potential, chemical and radiological concentrations, fissile material concentrations, HGR, temperature, and concentrations of chemicals that contribute to flammability (e.g., ammonia, butanol, DMHg, Isopar® L, isopropanol, methanol, NORPAR™ 13, TPB, TBP). The supporting analyses for the process locations within the Saltstone Facility (e.g., SDUs, Building 210-Z process room, SSRTs) may be based on different parameters, as outlined below. However, the Saltstone Facility WAC Program is assumed to protect the most limiting values.
- Workers have the ability to react to obvious hazardous conditions and to evacuate. This, of course, invokes the assumptions that the workers are made aware of the conditions, are physically able to evacuate, and that an evacuation route is available during, or immediately following, the hazardous condition.
- Salt solution, due to its high pH, is considered a contact hazard to FWs, and as such, is considered a SIH.
- Potential locations for confined hydrogen were evaluated for the possibility that fragments resulting from an explosion in these locations may impact safety related

SSCs. Impact to FWs due to fragments resulting from a confined hydrogen explosion is considered a SIH.

- IW and 50 wt% NaOH, due to their high pH, are considered a contact hazard to FWs and are considered a SIH.

- The total amount of radioactive salt solution taken to be the maximum missing waste that contributes to the bounding MAR volume is 15,000 gallons. This is applicable to both inter-area transfers (Tank 50H to SPF) and intra-area transfers. A MAR of 43,600 gallons is utilized as the inter-area transfer line spill volume of the future SWPF Decontaminated Salt Solution Hold Tank, which is larger than the maximum missing waste utilized for the current CSTF transfer spill volume. This item is a place holder for when SWPF comes on line and will have an additional interface control with the safety basis change allowing SWPF operation.
- The CSTF NPH Response terminates Tank 50H to SPF transfer to protect the 15,000-gallon maximum missing waste assumption.
- The SFT agitator is incapable of operation and power to the agitator has been secured. The blades of the agitator are encased in grout and therefore the agitator cannot operate. There are no significant heat addition mechanisms within the SFT aside from the agitator; due to its inoperable status, the agitator cannot heat the waste and therefore does not affect the flammability of the SFT.
- If a new flammable species becomes evident, it shall be evaluated to determine its contribution to flammability of the SFT. If the evaluation result is less than or equal to 0.5%, no further action is required. A threshold of 0.5% is appropriate as it has minimal impact to overall results of Reference 151. Margin is provided in the analysis as the SFT is assumed to be at an elevated temperature and in an overflow condition, minimizing the vapor space. Based on these considerations, cumulative additions of species less than or equal to 0.5% of the Lower Flammability Limit (LFL) is not required. If the result is greater than 0.5%, the new flammable species is not considered to be within the existing safety analysis.

To allow for future processing, the SSRT CHA (Ref. 134) considered the receipt, transfer, and processing of salt solution based on processing Tank 50H salt solution with high Isopar® L characteristics. Those characteristics are:

- Isopar® L is limited to 87.5 parts per million (ppm)

  The SSRT flammability calculations use Isopar® L units of 87.5 ppm, which provides a more conservative vapor space concentration than units of milligrams/Liter (mg/L).

- Butanol is limited to 0.75 + 0.28 (from the hydrolysis of 1 mg/L of TBP) = 1.03 mg/L
- Isopropanol is limited to 0.25 mg/L
- Methanol is limited to 0.25 mg/L and represents methanol from Tank 50H (0.05 mg/L) and 0.20 mg/L when configured for set retardant

- NORPAR™ 13 is limited to 0.75 mg/L
- Ammonia is limited to 200 mg/L for flammability analysis and 220 mg/L for consequence analysis
- Dimethyl mercury is limited to 1.1 mg/L

Benzene from the decomposition of TPB was not considered in the SSRT flammability analysis. TPB decomposes at temperatures above 75°C, well above the operating range of the SSRTs (Ref. 135).

If a new flammable species becomes evident, it shall be evaluated to determine its contribution to flammability of the SSRTs. If the evaluation result is less than or equal to 0.5%, no further action is required. A threshold of 0.5% is appropriate as it has minimal impact to overall results of Reference 135. Margin is provided in the analysis as the SSRTs are assumed to be at an elevated temperature and in an overflow condition, minimizing the vapor space. Based on these considerations, cumulative additions of species less than or equal to 0.5% of the LFL is not required. If the result is greater than 0.5%, the new flammable species is not considered to be within the existing safety analysis.

- The radiolytic HGR of salt solution is assumed to be 1.41E-08 ft^3/hr/gal at 95°C. This is assumed to be a continuous release.
- The thermolytic HGR is evaluated at the waste temperature utilized in flammability analysis. This is assumed to be a continuous release.
- The initial temperature of the salt solution entering Saltstone is limited to 40°C based on the Saltstone Facility WAC.
- The bounding pump flow rate from the SSRTs is limited based on the SSRT transfer pump runout rate of 170 gpm.
- The bounding volume of grout per pour is limited by the grout pump bounding flow rate of 180 gpm.
- Operator rounds are taken daily to monitor processes (e.g., SSRT parameters).

Additionally, the initial conditions and assumptions for maximum missing waste and CSTF NPH Response apply (as listed above in the unmitigated hazard analysis conducted for the Saltstone Facility).

The flammability analysis of SDUs 3 and 6 supporting the HA (Refs. 109, 143) considered pouring of grout containing salt solution and dry feeds into an SDU based on the following parameters:

- The Saltstone Facility will conduct Low Isopar® L Operation. Low Isopar® L Operation is defined by the processing of Tank 50H salt solution with low Isopar® L characteristics. Those characteristics are:
  - Isopar® L is limited to 11 ppm

    The SDU flammability calculations (excluding SDU 6) use Isopar® L units of 11 ppm, which provides a more conservative vapor space concentration than units of mg/L.

    The Saltstone Facility is limited to Low Isopar® L Operation, but the SDU 6 flammability calculation evaluates an Isopar® L concentration of up to 87.5 ppm. This is in support of future Salt Waste Procesing Facility (SWPF) operation.
  - Benzene is limited to a total of 4.15 kg per SDU cell
  - Ammonia is limited to 200 mg/L
  - Other volatiles
    - Butanol is limited to 0.75 mg/L+ 0.28 (from the hydrolysis of 1 mg/L of TBP) = 1.03 mg/L
    - Isopropanol is limited to 0.25 mg/L
    - Methanol is limited to 0.25 mg/L
    - NORPAR™ 13 is limited to 0.75 mg/L
    - TBP is limited to 1 mg/L. TBP unto itself is not flammable; however, hydrolysis will produce 0.28 mg/L of butanol per 1 mg/L of TBP

    Sampling of Tank 50H for these other volatiles may exceed their limits individually. Using existing SDU flammability methodology, an engineering evaluation may be completed to demonstrate that the Composite Lower Flammability Limit (CLFL) of the SDU vapor space will not exceed 95% at the time the SDU is at the peak percent of CLFL.

    If a new flammable species becomes evident, it shall be evaluated to determine its contribution to flammability. If the evaluation result is less than or equal to 0.5%, no further action is required. A threshold of 0.5% is appropriate as it has minimal impact to overall results of References 109 and 143. Because of this minimal impact, allowance for cumulative additions of species less than or equal to 0.5% of the LFL is not required. In addition, vapor space sampling of the SDUs historically demonstrates that there is only a marginal concentration of flammables in the vapor space. If the result is greater than 0.5%, SDUs 3 and 6 shall be evaluated per Reference 109 and 143 respectively to ensure the peak CLFL remains below 95% at the Maximum Grout Height (Ref. 109, 143). The evaluation may use actual

parameters (e.g., pour schedule, pour flow rate, salt solution mass fraction, grout temperature) and constituent concentrations that has been sent to the SDU at the fill height at the time of discovery, but must use DSA inputs and assumptions from that height up to the Maximum Grout Height with the inclusion of the new species. SDUs 2, 4, and 5 have actual measurement data supporting their flammability basis, and will not be reevaluated because SDUs 2 and 5 are operationally filled and SDU 4 is inactive. The grout transfer line has been blanked to SDUs 2 and 5 and is no longer connected to SDU 4.

- Dimethyl mercury is limited to 1.1 mg/L. However, DMHg is a negligible contributor to vapor space flammability in the SDUs (Ref. 88).

- The radiolytic HGR was assumed to be 1.41E-08 ft^3/hr/gal of salt solution in grout at 95°C (Ref. 88). This is assumed to be a continuous release.
- The thermolytic HGR is evaluated at the waste temperature utilized in the flammability analysis. This is assumed to be a continuous release.
- The total amount of benzene released from salt solution is based on the total amount of TPB currently in Tank 50H. The total amount of Potassium Tetraphenylborate (KTPB) currently in Tank 50H is 4.76 kg which may potentially release 4.15 kg of benzene. It is assumed this TPB is received into an SDU and converted to benzene. For the flammability analysis, the release of benzene from salt solution is assumed to occur over 20 days. This release profile is used to calculate diffusion coefficients.
- For ammonia, a constant concentration of 3.9 mg/L is applied to the vapor space (Ref. 122). This is based on grout testing at 95°C which showed this equilibrium concentration of ammonia in the vapor space for salt solution containing 200 mg/L of ammonia. Ammonia testing used thermally beneficiated (Carbon Burn Out [CBO]) flyash. 3.9 mg/L accounts for ammonia from salt solution, dry feeds, and chemical reactions.
- The pour schedule for SDU 3 was assumed to be 10 hours per day, 7 days a week until the SDU cell is full.
- The SDU 6 flammability analysis evaluated a maximum salt solution throughput of approximately 10 million gallons annually, assuming 24-hour/day operation. Conservatively, continuous pouring of the feed stock (Tank 50H plus SSRT inventory) at a low rate (worst case; 65 gpm [Ref. 88]) was assumed and no vapor space mixing was assumed during these pours. Sustained, continuous pour operations assumed in Reference 143 may not be achievable due to dry feeds limitations and the lower output of the SWPF (as compared to the throughput of SPF). Pour durations assumed are not meant to restrict facility operations, but rather to provide a reasonably bounding scenario to ensure safe operation of the Saltstone Facility.
- For SDU 3, the bounding volume of grout per pour was limited by the grout pump bounding flow rate of 180 gpm.
- The vapor space temperature was assumed to be 65°C.

- For SDU 3, the grout monolith temperature for the first 180 days was assumed to have a temperature profile of 75°C in the top 40 cm and the bottom 66 cm, and 95°C for all other areas of the monolith. The grout monolith temperature after 180 days was assumed to have a temperature profile of 75°C for all areas of the SDU. The temperature profile in SDU 3 has been predicted using a heat transfer model with conservative assumptions made on the processing rate into an SDU and the heat generation expected from curing saltstone (Ref. 88). SDU 6 uses a grout temperature of 75°C for all areas of the SDU. The same heat transfer model that was used for SDU 3 was used for SDU 6 in Reference 145.
- The vapor space was assumed to be a homogeneous gas mixture (i.e., the vapor space is well mixed). This was evaluated in References 108, 109, 116, and 126. SDU 6 assumes that the vapor space is well mixed on non-pour days (Ref. 143), and on pour days, when diffusion is the controlling mechanism, the vapor space is not well mixed.
- The displacement of vapor space gas out of the SDU was assumed to be equal to the displacement volume of the grout plus the volume of gases evolved from the grout.
- The grout composition was assumed to be less than or equal to 48 wt% salt solution for SDUs 3 and 6 with a minimum salt solution density of 1.1 kg/L (Ref. 88).
- The release fraction of Isopar® L in the SDUs is assumed to be 92% for grout volume at 95°C and 21.43% for grout volume at 75°C. This is based on SRNL testing at 95°C, the maximum assumed grout temperature, and 75°C. The 92% Isopar® L release is assumed to occur over a 20-day period and the 21.43% Isopar® L release is assumed to occur over a 35 day period. The Lower Flammability Limit (LFL) of Isopar® L is assumed to be 0.656 vol% at 25°C (Ref. 88). These release profiles are used to calculate diffusion coefficients.
- The atmospheric pressure fluctuation was assumed to be 5 mbars/day (Ref. 88). The breathing due to the atmospheric pressure fluctuations aids in displacement of flammable vapors from the SDU vapor space. This is based on average meteorological data taken at Bush Field in Augusta, GA over a five year period. Other mechanisms which would dilute the SDU vapor space exist, but are not credited in this evaluation (e.g., flow between the roof vents and diffusion). While not necessarily bounding, the use of average meteorological data was determined to be reasonably conservative based on not crediting other mechanisms to remove flammable vapors from the vapor space and the long time taken to fill the SDUs.

Flammable gases may be released from the dry feeds used in the process. The release of the gases from dry feeds is based on SRNL testing. The mixture of dry feeds are controlled at 10 wt% cement, 45 wt% slag, and 45 wt% thermally beneficiated flyash to be consistent with the SRNL testing. The grinding agents assumed to be used in the production of cement are gypsum and diethylene glycol. The grinding agents assumed to be used in the production of slag are diethylene glycol and amine acetate. CBO flyash was used to determine ammonia contribution to vapor space flammability and is the basis for crediting a reduction in the contribution from toluene and xylene.

The use of any thermally beneficiated flyash that can be shown (engineering evaluation or testing) to meet the flyash contributions to flammable gas assumptions is acceptable for Saltstone

Operations (Ref. 88). In addition to the contribution to the overall vapor space concentration of ammonia given above, the following are assumed to be released from the dry feeds in an SDU:

- The benzene release from dry feeds is assumed to be 0.13 µg/g of grout. The release of benzene from dry feeds is assumed to occur over 150 days. This release profile is used to calculate a diffusion coefficient.
- The toluene release from dry feeds is assumed to be 166.7 µg/kg of grout. The release of toluene from dry feeds is assumed to occur over 150 days. Toluene concentrations assumed a 90% reduction factor due to thermally beneficiated flyash. This release profile is used to calculate a diffusion coefficient.
- The xylene release from dry feeds is assumed to be 16.67 µg/kg of grout. The release of xylene from dry feeds is assumed to occur over 150 days. Xylene concentrations assumed a 90% reduction factor due to thermally beneficiated flyash. This release profile is used to calculate a diffusion coefficient.

Admixtures are prohibited for use in the Saltstone Facility. However, flammability calculations for the SDUs conservatively assume the presence of xylene from anti-foam agents and methanol from set retardant.

The flammability analyses for SDUs 3 and 6 vary in the methodologies of evaluation. The flammability analysis for SDUs 3 and 6 evaluates some of the species (i.e., Isopar® L, xylene, toluene, and benzene) released based on calculated diffusion coefficients through the grout layers. Diffusion coefficients were calculated for benzene, xylene, and toluene at 95°C. For Isopar® L, diffusion coefficients were calculated at 75°C and 95°C. In order to model diffusion through the grout, two models are used in SDU 3. A one region model is used for the xylene, toluene, and benzene for all grout temperature regions for diffusion out of the top surface. The one region model is used for the Isopar® L only when the grout poured does not contain the 95°C temperature region (only the 75°C grout as previously described) for diffusion out of the top surface. The one region model is also used to model diffusion through the outer vertical wall for all species. The second model is a two-region model used for only Isopar® L when the grout height includes the 95°C region. This is done to reflect the slower diffusion rate of Isopar® L due to the cooler temperature (75°C) layer of 40 cm on top slowing the release from the layers beneath it which are at a higher assumed temperature (95°C). The remaining flammable gases are assumed to release immediately after the day's pour calculation with the exception of hydrogen, which is continuous, and ammonia, which is a constant concentration. The two-region model for SDU 3 is applied in the flammability analysis for 180 days. Following 180 days, the single-region model at 75°C is then assumed. SDU 6 does not exceed 75°C anywhere, so the one-region model is used for Isopar® L (as well as benzene, toluene, and xylene) in the flammability analysis. Otherwise releases in SDU 6 are modeled the same way as they are modeled in the SDU 3 analysis. Due to these differences in evaluating the SDUs, the SDU 3 peak CLFL occurs earlier (approximately 180 days after the final pour) while for SDU 6, the maximum occurs hundreds of days after the final pour. Additional methodology details and equations used in the flammability analyses for the SDUs are contained within References 109 and 143.

Several initial conditions are credited for the Saltstone Facility events as SS for protecting bounding initial conditions:

- The SDU Cell Passive Vents are required to ensure flammable gases do not accumulate in the SDU vapor space. The SDU Cell Passive Vents provide a connection between the SDU vapor space and environment that allows the displacement of vapor space volume during pouring and passive breathing, which reduces the accumulation of flammable gases in the SDU vapor space. This Design Feature (DF) will perform an SS safety function. SDU 6 passive vents are excluded (but are still protected by the Structural Integrity Program discussed below) based on the conclusions of Reference 142.

- The CSTF NPH Response shall ensure during a tornado watch/tornado warning/high wind warning, following a Tornado/High Wind Event, or following an earthquake, transfers are terminated and a siphon break established. Securing the Tank 50H to Z-Area transfer protects the initial conditions of the accident analysis by limiting the potential spill volume from Tank 50H transfers to 15,000 gallons. This interface control will perform an SS safety function.

- The Saltstone Facility WAC Program shall ensure that the composition of the salt solution received from Tank 50H is within the analyzed limits. This safety function is accomplished by maintaining a material balance to ensure compliance with the Saltstone WAC. Salt solution transfers are within analyzed flammability limits provided the HGR (radiolytic and thermolytic) and concentration of chemicals that contribute to the flammable vapor constituents (e.g., ammonia, butanol, DMHg, Isopar® L, isopropanol, methanol, NORPAR™ 13, TBP, TPB), and the temperature of the salt solution remains at or below 40°C prior to transfer are protected. This program will perform an SS safety function. This control is not applicable to SDUs 2, 4, and 5. SDUs 2 and 5 are operationally filled and SDU 4 is inactive. The grout transfer line has been blanked to SDUs 2 and 5 and is no longer connected to SDU 4.

- The SDU Fill Heights shall ensure that the SDU vapor space is maintained below the CLFL. This safety function is accomplished by limiting the height to which an operationally active SDU can be filled with grout that maintains a minimum vapor space volume, which allows the bulk vapor space to remain below the CLFL. These SACs will perform an SS safety function. This control is not applicable to SDUs 2, 4, and 5. SDUs 2 and 5 are operationally filled and SDU 4 is inactive. The grout transfer line has been blanked to SDUs 2 and 5 and is no longer connected to SDU 4.

- The Structural Integrity Program shall ensure the function of the SDU Cell Passive Vents (SDUs 2, 3, 4, and 5) and SDU passive vents (SDU 6). This safety function is accomplished by periodic inspection of the passive vents in order to identify if any structural degradation or pluggage is occurring, which may compromise the ability of the passive vents to perform their function. This program will perform an SS safety function.

- The Prohibited Operations Program protects the present inventory and vapor space volume of an SDU/SDU cell and forms the basis for the hazards analysis. Additional inventory is prevented from entering inactive/operationally filled SDUs/SDU cells for all possible configurations. Flammability of the vapor space in an SDU/SDU cell has a direct correlation to the available vapor volume and the amount of flammable materials that enter the SDU/SDU cell. This program will perform an SS safety function.

Multiple CHAs (Ref. 6, 112, 123, 134, 142), when considered in aggregate, constitute the HA for the Saltstone Facility. For Low Isopar® L Operation, an explosion in the vapor space of an SDU is not credible due to the initial conditions credited. Some CHAs assume that Saltstone is processing salt solution with high Isopar® L characteristics; however, the Saltstone Facility is limited by the Saltstone Facility WAC Program to Low Isopar® L Operations only. The conclusions of these CHAs do not change if processing salt solution with low Isopar® L characteristics.

The results of the unmitigated hazard analysis are documented in the CHAs (Ref. 6, 112, 123, 134, 142). Five unmitigated events from the SSRT CHA and the SDU 6 CHA exceed the risk criteria for chemical guidelines to the CW receptor (Ref. 134 and 142). No other unmitigated events exceed the risk criteria for radiological consequences or chemical guidelines to the CW or Public receptor. Many events are binned into Region B (Moderate consequences) for the CW and FW receptor due to exceeding the chemical consequences of the Protective Action Criteria 2 (PAC-2). The Region B events for the CW and FW are summarized in the CHAs (Ref. 6, 112, 123, 134, 142). No events were determined to challenge the radiological EGs for the Public receptor.

Mitigated Hazard Analysis

There were a number of other events where the chemical concentrations calculated for the CW exceeded the PAC-2 values and required further evaluation in the mitigated analysis. The results of the mitigated analysis are documented in the CHAs (Ref. 6, 112, 123, 134, 142).

3.3.2.3.1 Planned Design and Operational Safety Improvements

There are no design or operational safety improvements resulting from the hazards analysis performed that are not yet implemented.

3.3.2.3.2 Defense In Depth

DID, as an approach to facility safety, builds in layers of defense against the release of hazardous and radiological material so that no one layer is completely relied upon. To compensate for potential human and mechanical failures, DID is based on several layers of protection with successive barriers to prevent the release of hazardous materials to the environment. This approach includes measures to protect the public, site worker, and the environment from harm in case these barriers are not fully effective.

Safety-Significant SSCs

Based on the SSRT CHA (Ref. 134) and the SDU 6 CHA (Ref. 142), five unmitigated events were determined to have the potential for High onsite chemical consequences. These events are controlled through SACs. Based on the CHAs, no other unmitigated events were determined to have the potential for High consequences, which would require SS SSCs. The SDU Cell Passive Vents, which are considered an initial condition, are classified as SS DFs for all SDUs except SDU 6.

TSRs

Based on the SSRT CHA (Ref. 134) and the SDU 6 CHA (Ref. 142), five unmitigated events were determined to have the potential for High onsite chemical consequences, which are controlled through SACs. These SACs include securing the SSRT agitator(s) prior to a Tornado/High Wind Event and following a Seismic Event and securing transfers from the SSRT(s) and SFT prior to a Tornado/High Wind Event. Based on the other CHAs (Ref. 6, 112, 123), no other unmitigated events were determined to require TSRs. The Saltstone Facility WAC Program and the SDU Fill Heights, which are considered initial conditions, are classified as SACs.

In addition, the Saltstone Facility CHA assumed a maximum of 15,000 gallons salt solution as missing waste volume during transfers. In order to protect this volume, programmatic and/or SACs shall ensure that inadvertent transfers, including a siphon from Tank 50H, are prevented. Section 5.7, “Interface with TSRs from Other Facilities”, identifies controls to ensure that the inventory input and MAR assumptions related to the Saltstone Facility remain valid and that waste received does not exceed the HA assumptions.

Chapters 4 and 5 provide additional detail with respect to programmatic and specific ACs, interface with TSRs from other facilities, and credited controls.

3.3.2.3.3 Worker Safety

This section summarizes the efforts for identification of major features protecting workers from the hazards of facility operation. The HA process identified facility/process controls that provide additional worker protection for Region A and B events for the FWs. These facility/process controls are listed in the CHA (Ref. 6, 112, 123, 134, 142) for postulated radiological/chemical events. Facility and site programs, which protect the worker, are outlined in Chapters 7-17. Safety management programs that are addressed by TSR ACs are discussed in Chapter 5.

3.3.2.3.4 Environmental Protection

The potential for large material releases to the environment is minimized by the facility/process controls that were identified during the HA process. These facility/process controls protect the public, workers, and the environment. In addition to these facility/process controls, additional controls designed to protect the environment are discussed below.

In the course of normal Z-Area operations, small quantities of radionuclides are potentially released to the atmosphere through the main stack at the Process Building (210-Z), through the stack at the Operations Building (704-Z), and through the stack at the SSRT Building (201-1Z). The Facility PVVS exhausts to the Process Building stack. The SSRT PVVS exhausts to the SSRT stack. These are the only sources for airborne releases of radioactive material from the SPF during normal operations and the systems are designed to limit stack releases of radioactivity. The design minimizes airborne releases with the following features:

- In the Facility PVVS, the offgases from the SFT and CCBT are sent through a HEPA filter
- In the SSRT PVVS, the offgases from the SSRTs are sent through a HEPA filter

Small quantities of radionuclides are potentially released to the atmosphere through the SDU passive vents and the SDU Portable Ventilation System. These are designed to limit releases of radioactivity. The design minimizes airborne releases with the following features:

- SDU Cell Passive Vents contain HEPA filters as needed
- SDU Portable Ventilation System vents through HEPA filter(s)

Additionally, when installed, the SDU 6 passive vent HEPA filters contain airborne contaminants if the interior liner were to catch fire.

No Z-Area liquid effluents are discharged directly to the environment without passing a radiological screening. A National Emissions Standards for Hazardous Air Pollutants (NESHAP) ST evaluation (Ref. 70) has concluded that the small atmospheric releases from the pouring of grout made from the 0.2 Ci/gal Cs-137 salt solutions are acceptable without requiring filtration devices on the release flow path. Design elements designed to minimize effluent releases to the environment include the following:

- Liquid process waste from flushing activities and facility drains is collected in the SFT.
- Rainwater can drain into the SSRT sumps. If the contents are contaminated, they are transferred to the SSRT for subsequent processing into saltstone. If not, the contents may be discharged to the site storm drains.
- Rainwater can drain into the CCBT and SFT sumps. If the contents are contaminated, they are transferred to the SFT for subsequent processing into saltstone. If not, the contents may be discharged to the site storm drains.
- For the saltstone SDUs, leaching and migration of chemicals and radionuclides from the saltstone monoliths are minimized through design and material selection so that groundwater at the landfill boundary will not exceed Environmental Protection Agency drinking water standards.
- Groundwater monitoring wells are installed and monitored to detect contamination releases.

3.3.2.3.5 Accident Selection

DOE-STD-3009-94 (Ref. 2), Section 3.3.2.3.5 requires at least one bounding accident from each of the major types determined from the HA should be selected as DBAs, unless the bounding consequences are Low.

In looking at the spectrum of events from the HA, considering both consequence and likelihood of the event occurrence, it is judged that the Tornado/High Wind Event and the Seismic Event are the bounding events to be selected for quantitative accident analysis.

3.4 ACCIDENT ANALYSIS

Section 3.3 discusses the process by which potential events are screened in order to identify those that require further, quantitative accident analysis. This section describes the methodology used to analyze these accidents, and presents the final results of the analysis. As a result of the HAs performed for the Saltstone Facility, several events were binned as high-risk events. These events, which are carried forward for quantitative accident analysis, are the Tornado/High Wind Event and the Seismic Event.

Accident analysis for the Saltstone Facility began with the development of the bounding accident scenario. An ST was then determined using phenomenological calculations. Once the ST was developed, the radiological and toxicological consequences were determined using computer programs. Finally, the consequences were compared to the EGs to determine if safety-related SSCs and ACs are required. Per DOE-STD-3009-94, detailed accident quantification is required for HC-2 facilities. Therefore, detailed accident analysis calculations were developed during the development of the bounding accident analysis.

3.4.1 METHODOLOGY

This section describes the methodology used to determine the consequences for the DBAs identified in Section 3.3.2.3.5, “Accident Selection”. The specific application of the methodology described here for the DBAs identified in the unmitigated hazard analysis is detailed in Section 3.4.2.

The exposure pathway of primary interest in the DSA is the inhalation pathway. The assessment of a DBA involves, first, determining the quantity of radioactive or chemical material becoming airborne during the event and, second, determining the consequences of that material to the receptors of interest (the CW or an offsite individual).

3.4.1.1 Source Term Analysis

The quantity of material made airborne by an accident is referred to as the ST. The ST is determined per guidance presented in DOE-HDBK-3010-94 (Ref. 38), i.e., using the following equation:

$$ST = MAR * DR * ARF * RF * LPF$$

where:

ST	=	Source Term
MAR	=	Material at Risk
DR	=	Damage Ratio
ARF	=	Airborne Release Fraction
RF	=	Respirable Fraction
LPF	=	Leak Path Factor

The MAR is the amount of material assumed available to be acted upon by the event. The actual amount of material affected by the event is represented by the product MAR * DR, where DR is the fraction of the MAR actually impacted by the event. The bounding ARF and RF values are obtained from DOE-HDBK-3010-94 and are based on the release mechanism and the material form (Ref. 38). The product of ARF * RF represents the fraction of the material impacted that becomes airborne and is respirable at the location of the event. The LPF represents the fraction of the airborne respirable material released to the environment. The LPF may be used to indicate deposition and/or filtration as material leaves a building. For the Saltstone Facility, the LPF is assumed conservatively to be 1.0.

For some events, airborne releases occur by more than one mechanism, thus necessitating the application of the ST equation more than once. Usually, releases are separated into two phases. The first phase (called the initial phase) addresses short-term releases. These releases are often assumed to have a single release duration and the resulting STs are added prior to calculating consequences. The second phase (called the resuspension phase) is a longer term release involving the suspension of spilled material by airflow following the initial event. For this phase, an ARF is calculated by multiplying the Airborne Release Rate (ARR) recommended in Reference 38 by the time period during which resuspension is assumed to occur (usually 8 hours). The ST from the resuspension phase of the event may be added to that from the initial phase of the event if the dose factor (described in the next section) corresponding to the shorter of the two phases is conservatively applied to the sum; otherwise, the individual STs must be multiplied by corresponding dose factors prior to summing. The same requirement applies to short-term releases that have differing release durations.

The ST from vapor phase explosions is determined using a methodology that differs from the preceding methodology. For explosions, the ST at the location of the event, i.e., MAR * DR * ARF * RF, is calculated directly using the Trinitrotoluene (TNT) equivalent model recommended in Reference 38. In that model, the respirable mass of material made airborne by the explosion equals the energy released by the explosion expressed in terms of the equivalent mass of TNT; i.e.,

$$M_{TNT} = \frac{VH_f}{V_{molar}E_{TNT}}$$

where V is the volume of a flammable gas; H_f, the heat of combustion of the flammable gas; V_{molar}, the molar volume of the gas; and E_{TNT}, the heat of combustion of TNT.

The ST calculated using the TNT model is proportional to the number of moles burned in the vapor space, not necessarily the MAR. It may depend in a complex way on the MAR, the size of the vapor space, the generation rate of gas from the liquid/solid beneath the vapor space, and the presence of loss mechanisms, e.g., diurnal breathing.

Radiological STs are calculated in units of equivalent gallons of salt solution. This is a natural unit because the radiological content of the process resides in the salt solution. This unit is also used for chemicals originating in the salt solution. For chemicals originating in dry premix feeds (material added to the salt solution to form grout), the ST is calculated in terms of gallons of grout. For all chemicals, the ST is ultimately calculated in terms of mg of the particular chemical made airborne.

3.4.1.2 Consequence Analysis

The radiological consequences associated with a DBA are determined by multiplying the ST by a radiological dose factor. The dose factor depends on the location of the receptor and other parameters such as the roughness of the surface between the accident location and the receptor, the meteorological averaging time (which takes into account historical wind speeds and directions), and the level of confidence (in a statistical sense) of the calculations in terms of the meteorological data.

The regulatory basis for obtaining meteorological data and performing dispersion analyses is cited in DOE-STD-3009-94 (Ref. 2). DOE-STD-3009-94 invokes Regulatory Guide 1.145, Position 1.2 and Position 3 (Ref. 117), and Regulatory Guide 1.23 (Ref. 118). The Saltstone Facility demonstrates compliance with Regulatory Guide 1.145 (Ref. 117) and Regulatory Guide 1.23 (Ref. 118) in Reference 119.

The code of choice for calculating the offsite TED is the MACCS computer code. MACCS takes into account site-specific meteorology, breathing rate, and other pertinent information to calculate the relative amount of material to which an individual would be exposed at specified locations. Using the bounding radiological concentrations listed in Table 3.6-6, Version 2 of MACCS2 was used to generate the TED (in rem per gallon) for the MOI (Ref. 95). Once a TED is known for a specified receptor location, it is multiplied by the ST to obtain a given dose at that location.

The duration of release affects the offsite TED through the meteorological averaging time. For equivalent STs, a shorter release gives a larger TED. For events involving two phases (the initial phase and the resuspension phase, such as the SSRT explosion), two TEDs are typically applied because of the large differences in release duration associated with these phases. The duration upon which the spill and explosion TED is based was conservatively assumed to be 3 minutes. This is the shortest duration available in the MACCS/MACCS2 computer code. The duration upon which a fire TED is based was conservatively assumed to be 20 minutes. The duration upon which the resuspension TED is based was assumed to be 8 hours.

Atmospheric dispersion (χ/Q) values are consistent across radiological and chemical dispersion calculations. The onsite value is the prescribed DOE-STD-1189 (Ref. 132) χ/Q value of 3.5E-03 seconds/meter^3. The offsite χ/Q value is based on various averaging times, represents

95th percentile results based on a statistical treatment of site meteorological data, and utilizes a surface roughness of 160 cm (Ref. 150). The offsite χ/Q is obtained from the MACCS/MACCS2 computer code.

TEDs are calculated in units of rem per gallon of salt solution. As mentioned previously, the radiological ST is calculated in units of gallons of salt solution; therefore, consequences in units of rem are obtained by a simple multiplication of the TED and the ST.

Chemical Source Term Calculation

The downwind consequences for chemicals are calculated according to the following:

$$C_i = \left(\frac{ST_m}{t}\right) \times \left(\frac{\chi}{Q}\right)$$

where C_i is the airborne concentration of a particular chemical at receptor; ST_m, the mass-based source term for a particular chemical; t, the release duration; and χ/Q, the atmospheric dispersion coefficient for the particular receptor of interest.

A 15 minute release duration is assumed because the applicable chemical guidelines are based on a 15 minute peak average value except for concentration dependent chemicals in an explosion, which use a 3 minute release duration.

The calculation results in the airborne concentration of the chemicals at the particular receptor. The concentration of chemicals is typically defined as a minimum ST for spills and explosions or MAR for fire scenarios, and are used as appropriate for comparison to EGs as discussed in the next section. For heating and boiling events, MAR is utilized due to the nature of the accident analysis methodology.

DOE-STD-1189-2008 (Ref. 132) states that concurrent releases of chemicals with a plausible release scenario should be assessed. This is done by first looking at the Sum of Fractions (SOF) to see if all of the chemicals released at the same time will exceed PAC. The SOF involves summing all of the percentages of PAC together. If this percentage is less than 100%, then the release of all of the chemicals does not exceed PAC. If the SOF exceeds 100%, the Mixture Methodology "Hazard Index" Excel File described in Reference 132 can be utilized to determine if the chemical release based on target organs would still exceed PAC values. If the SOF for any one target organ exceeds 100%, then the release would exceed PAC. Additionally, if the target organ values exceed PAC, the limiting ion process can be utilized. The limiting ion process, which is a refinement to the Chemical Mixture Methodology (CMM) process, evaluates chemicals containing common ions until the available mass of the limiting ion is exhausted or the resulting SOF for the target organ of concern is less than PAC.

3.4.1.3 Comparison to Guidelines

The offsite and onsite (100 m) radiological exposure guidelines are 25 rem and 100 rem, respectively. These guidelines are taken from Reference 41. Consequences calculated to

challenge the offsite guideline require SC mitigation. Those exceeding the onsite guideline require SS mitigation.

The offsite and onsite (100 m) chemical exposure guidelines are the PAC-2 and PAC-3 concentration limits, respectively, given in Reference 41. Consequences calculated to exceed the onsite or the offsite chemical guideline require SS mitigation.

3.4.2 DESIGN BASIS ACCIDENTS

The DBAs for the Saltstone Facility are in the natural phenomena events category (i.e., Tornado/High Wind and Seismic Events). The consequences in this section are quantified based on salt solution with high Isopar® L characteristics as described in Section 3.3.2.3.

3.4.2.1 Tornado/High Wind Event

3.4.2.1.1 Scenario Development

The Tornado/High Wind Event results in several potential accident scenarios. The first scenario involves an SSRT explosion, the second scenario involves multiple spills and fires occurring in the Saltstone Facility (Saltstone Full Facility Event), the third scenario involves multiple spills and fires occurring in the SSRT area, and the last scenario involves a spill and fire in the Building 210-Z process room.

Tornado/High Wind Event (SSRT Explosion Scenario)

This event scenario addresses a detonation of the SSRT due to the presence of flammable vapors in the vapor space. The resulting explosion fails the tank and hazardous material is released to the environment.

The HA classifies this event in the Anticipated frequency bin (unmitigated). No detailed frequency analyses were performed to lower the assumed frequency. Though not credited, normal operating procedures and the low probability of an ignition source being present with the vapor space above 100% of the CLFL significantly reduce the probability of an SSRT explosion.

The unmitigated accident progression involves the following:

- SSRT agitator is running with salt solution processing in progress
- Tornado/High Wind Event occurs causing salt solution transfers into and out of the SSRT to stop, leaving the SSRT stagnant
- SSRT agitator continues to run for greater than ~108 hours (Ref. 137)
- SSRT agitator running causes salt solution temperature to increase to 55°C (Ref. 137)
- Flammable vapors accumulate in the SSRT vapor space exceeding CLFL and ignite (ignition source is assumed present)
- Explosion breaches the SSRT and spills tank contents

The mitigated accident progression involves the following:

- SSRT agitator is running with salt solution processing in progress
- Tornado warning or high wind warning issued by SRS Operations Center (SRSOC)
- Severe Weather Response Program [First Level of Control (LOC)] secures SSRT agitator(s) operation upon a tornado warning or high wind warning (SAC)

Since the agitator is the main source of heat input into the SSRTs, the Severe Weather Response Program prevents the SSRT explosion by removing the heat source. Given the time required to reach CLFL due to heating the SSRT and that the required action occurs prior to the event, the Tornado/High Wind induced SSRT explosion is prevented. No mitigated analysis is required.

Tornado/High Wind Event (Full Facility Spills and Fires Scenario)

This event scenario addresses multiple spills and fires throughout the Saltstone Facility occurring simultaneously. The resulting event releases hazardous material to the environment.

This scenario includes an initial condition that the SSRT discharge piping to the Building 210-Z process room includes a non-safety related gravity drain pipe loop with siphon break assembly that by its passive design and configuration prevents a siphon from the SSRTs to the Building 210-Z process room.

The HA classifies this event in the Anticipated frequency bin (unmitigated). No detailed frequency analyses were performed to lower the assumed frequency.

The unmitigated accident progression involves the following:

- Salt solution processing in progress
- Tornado/High Wind Event occurs damaging the Saltstone Facility leading to spills and fires involving salt solution and grout
- Spill or loss of confinement occurs from the inter-area transfer line, SFT to SSRT transfer line, SSRT to mixer transfer line, SSRT, Building 210-Z process room hold-up MAR, SPF and SDU HEPA filters, SDU vapor, SDU 6 unset grout, leachate collection and return system, and the SDU 6 drainwater collection and return system
- Fire occurs in the CCBT enclosure, Building 210-Z process room, and SPF and SDU HEPA filters

The mitigated accident progression involves the following:

- Salt solution processing in progress
- Tornado warning or high wind warning issued by SRSOC
- Severe Weather Response Program (First LOC) secures transfers from the SSRT(s) and SFT upon a tornado warning or high wind warning (SAC)
- CSTF Transfer Termination and Isolation During/Following NPH Events terminates transfers from CSTF and establishes a siphon break upon a tornado watch/tornado warning/high wind warning (SAC)

- Tornado/High Wind Event occurs damaging the Saltstone Facility leading to spills and fires involving salt solution and grout
- Spill or loss of confinement occurs from the SFT, both SSRTs, Building 210-Z process room hold-up MAR, SPF and SDU HEPA filters, SDU vapor, SDU 6 unset grout, SDU 6 drainwater, and leachate collection and return system
- Fire occurs in the Building 210-Z process room and SPF and SDU HEPA filters

Since most of the ST for the event is from the spills and fires in the Building 210-Z process room and CCBT enclosure, the Severe Weather Response Program and CSTF NPH Response are pre-event actions that will significantly reduce the consequences by limiting the MAR involved. The spill from transferring drainwater to the SFT does not occur in mitigated analysis since the SFT is assumed full; however, it is assumed damage occurs to SDU 6 resulting in a drainwater spill from it.

Tornado/High Wind Event (SSRT Area Spills and Fires Scenario)

This event scenario addresses multiple spills and fires in the SSRT Area occurring simultaneously. The resulting event releases hazardous material to the environment.

This scenario includes an initial condition that the SSRT discharge piping to the Building 210-Z process room includes a non-safety related gravity drain pipe loop with siphon break assembly that by its passive design and configuration prevents a siphon from the SSRTs to the Building 210-Z process room.

The HA classifies this event in the Anticipated frequency bin (unmitigated). No detailed frequency analyses were performed to lower the assumed frequency.

The unmitigated accident progression involves the following:

- Salt solution processing in progress
- Tornado/High Wind Event occurs damaging the Saltstone Facility leading to spills and fires involving salt solution and grout
- Spill or loss of confinement occurs from the inter-area transfer line, SFT to SSRT transfer line, SSRT to mixer transfer line, SSRT, and Building 210-Z process room hold-up MAR
- Fire occurs in the CCBT enclosure and Building 210-Z process room

The mitigated accident progression involves the following:

- Salt solution processing in progress
- Tornado warning or high wind warning issued by SRSOC
- Severe Weather Response Program (First LOC) secures transfers from the SSRT(s) and SFT upon a tornado warning or high wind warning (SAC)
- CSTF Transfer Termination and Isolation During/Following NPH Events terminates transfers from CSTF and establishes a siphon break upon a tornado watch/tornado warning/high wind warning (SAC)

- Tornado/High Wind Event occurs damaging the Saltstone Facility leading to spills and fires involving salt solution and grout
- Spill or loss of confinement occurs from the SFT, both SSRTs, and Building 210-Z process room hold-up MAR
- Fire occurs in Building 210-Z process room

Since most of the ST for the event is from the spill and fire in the Building 210-Z process room, the Severe Weather Response Program and CSTF NPH Response are pre-event actions that will significantly reduce the consequences by limiting the MAR involved.

Tornado/High Wind Event (Building 210-Z Process Room Spill and Fire Scenario)

This event scenario addresses a spill and fire in the Building 210-Z process room. The resulting event releases hazardous material to the environment.

This scenario includes an initial condition that the SSRT discharge piping to the Building 210-Z process room includes a non-safety related gravity drain pipe loop with siphon break assembly that by its passive design and configuration prevents a siphon from the SSRTs to the Building 210-Z process room.

The HA classifies this event in the Unlikely frequency bin (unmitigated). No detailed frequency analyses were performed to lower the assumed frequency.

The unmitigated accident progression involves the following:

- Salt solution processing in progress
- Tornado/High Wind Event occurs damaging the Saltstone Facility leading to spill and fire involving salt solution and grout
- Spill or loss of confinement occurs from the SFT or SSRT to mixer transfer line and Building 210-Z process room hold-up MAR
- Fire occurs in the Building 210-Z process room

The mitigated accident progression involves the following:

- Salt solution processing in progress
- Tornado warning or high wind warning issued by SRSOC
- Severe Weather Response Program (First LOC) secures transfers from the SSRT(s) and SFT upon a tornado warning or high wind warning (SAC)
- Tornado/High Wind Event occurs damaging the Saltstone Facility leading to spill and fire involving salt solution and grout
- Spill or loss of confinement occurs from the Building 210-Z process room hold-up MAR
- Fire occurs in the Building 210-Z process room

Since most of the ST for the event is from the spill and fire in the Building 210-Z process room, the Severe Weather Response Program is a pre-event action that will significantly reduce the consequences by limiting the MAR involved.

3.4.2.1.2 Source Term Analysis

Offsite and Onsite ST and dose calculations are based on the methodologies discussed in Section 3.4.1. For chemical consequence analysis, salt solution equivalent volumes are converted to actual volumes of salt solution and grout for evaluation.

Tornado/High Wind Event (SSRT Explosion Scenario)

The following inputs and assumptions were used to determine the SSRT explosion ST and are taken from References 136, 137, and 138:

- Salt solution temperature maintained ≤ 40°C
- Maximum salt solution volume in the SSRT is 65,500 gallons
- SSRT agitator is 15 horsepower with an 85% efficiency
- ARF*RF for aqueous spills < 3 meters is 1E-04
- ARR*RF for aqueous spill resuspension is 4E-06/hr
- LPF is 1.0

The volume of salt solution in the SSRT when the explosion occurs also contributes to the total ST by spilling onto the ground and being resuspended. This spill and resuspension ST is summed with the explosion ST to determine a total ST for the Tornado/High Wind Event (SSRT Explosion Scenario). For short duration events (explosions) in chemical analysis, resuspension is insignificant since the duration is only 15 minutes. A parametric analysis based on SSRT liquid level was performed to determine the bounding total ST.

Tornado/High Wind Event (Full Facility Spills and Fires Scenario)

The following inputs and assumptions were used to determine the full facility spill and fire STs and are taken from References 138, 139, and 142:

- Salt solution volume from the inter-area transfer line is 43,600 gallons[1]
- Salt solution volume from an SSRT spill into the process enclosure is 9,658 gallons
- Salt solution volume in SFT is 6,504 gallons
- Salt solution volume in one SSRT is 65,500 gallons
- Salt solution volume from the SSRT to mixer transfer line is 15,000 gallons

[1]The inter-area transfer line spill is the volume of the future SWPF Decontaminated Salt Solution Hold Tank (DSSHT), which is larger than the maximum missing waste utilized for the current CSTF transfer spill volume. This item in the progression is a place holder for when SWPF comes on line and will have an additional interface control with the safety basis change allowing SWPF operation.

- Salt solution equivalent volume in Building 210-Z process room hold-up is 375 gallons
- Salt solution equivalent volume in SPF HEPA is 34.16 gallons
- Salt solution equivalent volume in one SDU HEPA is 170.8 gallons
- Salt solution equivalent volume in SDU 6 vapor is 0.457 gallons
- Salt solution equivalent volume in SDU 6 unset grout spill is 13,800 gallons
- Salt solution volume in leachate collection and return system is 20,000 gallons
- Salt solution volume in all SDU 6 drainwells is 68,662 gallons
- Salt solution volume in drainwater return system is 540.84 gallons
- ARF*RF for aqueous spills < 3 meters is 1E-04
- ARF*RF for SFT to SSRT aqueous spills > 3 meters is 2.4E-04
- ARF*RF for SDU 6 aqueous spill > 3 meters is 4.1E-04
- ARF*RF for process room aqueous spills > 3 meters is 1.1E-04
- ARF*RF for inter-area transfer line spill > 3 meters is 4.1E-04
- ARF*RF for aqueous spill of drainwater return system > 3 meters is 1.8E-04
- ARR*RF for aqueous spill resuspension is 4E-06/hr
- ARF*RF for boiling of aqueous spills is 2E-03
- ARF*RF for boiling to dryness of aqueous spills is 5.6E-03
- ARR*RF for post-fire powder resuspension is 4E-05/hr
- ARF*RF for HEPA impact is 5E-04
- ARF*RF for HEPA burning is 1E-04
- ARF*RF for viscous spill (grout) > 3 meters from SDU 6 is 1E-05
- ARF*RF for viscous spill (grout) < 3 meters is 5.6E-06
- ARR*RF for viscous spill (grout) resuspension is 4E-06/hr
- ARF*RF for heating of waste during a fire is 3E-05
- ARF*RF for aqueous spill ≤ 1 meter is 2E-05
- ARF*RF for vapor release is 1.0
- LPF is 1.0

The various spill and fire STs along with applicable resuspension STs are summed together to determine a total ST for the Tornado/High Wind Event (Full Facility Spills and Fires Scenario).

Tornado/High Wind Event (SSRT Area Spills and Fires Scenario)

The following inputs and assumptions were used to determine the SSRT area spills and fires STs and are taken from References 138 and 139:

- Salt solution volume from the inter-area transfer line is 43,600 gallons[2]
- Salt solution volume from an SSRT spill into the process enclosure is 9,658 gallons
- Salt solution volume in SFT is 6,504 gallons
- Salt solution volume in one SSRT is 65,500 gallons
- Salt solution volume from the SSRT to mixer transfer line is 15,000 gallons
- Salt solution volume in Building 210-Z process room hold-up is 375 gallons
- ARF*RF for aqueous spills < 3 meters is 1E-04
- ARF*RF for inter-area transfer line spill > 3 meters is 4.1E-04
- ARF*RF for SFT to SSRT aqueous spills > 3 meters is 2.4E-04
- ARF*RF for process room aqueous spills > 3 meters is 1.1E-04
- ARR*RF for aqueous spill resuspension is 4E-06/hr
- ARF*RF for boiling of aqueous spills is 2E-03
- ARF*RF for boiling to dryness of aqueous spills is 5.6E-03
- ARF*RF for heating of waste during a fire is 3E-05
- ARR*RF for post-fire powder resuspension is 4E-05/hr
- ARF*RF for viscous spill (grout) < 3 meters is 5.6E-06
- ARF*RF for aqueous spill ≤ 1 meter is 2E-05
- LPF is 1.0

The various spill and fire STs along with applicable resuspension STs are summed together to determine a total ST for the Tornado/High Wind Event (SSRT Area Spills and Fires Scenario).

Tornado/High Wind Event (Building 210-Z Process Room Spill and Fire Scenario)

The following inputs and assumptions were used to determine the Building 210-Z process room spills and fires STs and are taken from References 138 and 140:

- Salt solution volume from the SSRT or SFT to mixer transfer line is 15,000 gallons (6,504 gallons for SFT)

---

[2]The inter-area transfer line spill is the volume of the future SWPF DSSHT, which is larger than the maximum missing waste utilized for the current CSTF transfer spill volume. This item in the progression is a place holder for when SWPF comes on line and will have an additional interface control with the safety basis change allowing SWPF operation.

- Salt solution equivalent volume in Building 210-Z process room hold-up is 375 gallons
- ARF*RF for viscous spill (grout) < 3 meters is 5.6E-06
- ARF*RF for process room aqueous spills > 3 meters is 1.1E-04
- ARF*RF for boiling to dryness of aqueous spills is 5.6E-03
- ARR*RF for post-fire powder resuspension is 4E-05/hr
- LPF is 1.0

The various spill and fire STs along with applicable resuspension STs are summed together to determine a total ST for the Tornado/High Wind Event (Building 210-Z Process Room Spill and Fire Scenario).

3.4.2.1.3 CONSEQUENCE ANALYSIS

The DOE-STD-1189 χ/Q value was used for the CW and the MACCS2 computer code was used for the MOI in calculating the TED values for the events (Ref. 95).

Tornado/High Wind Event (SSRT Explosion Scenario)

For the CW, the TED values were calculated utilizing the prescribed DOE-STD-1189 (Ref. 132) χ/Q value of 3.5E-03 seconds/meter^3. For the MOI, the TED values were calculated for a surface roughness of 160 cm and 95% meteorology. The χ/Q value for the CW and the surface roughness and meteorology value for the MOI were also used for calculating chemical consequences.

Tornado/High Wind Event (Full Facility Spills and Fires Scenario)

For the CW, the TED values were calculated utilizing the prescribed DOE-STD-1189 (Ref. 132) χ/Q value of 3.5E-03 seconds/meter^3. For the MOI, the TED values were calculated for a surface roughness of 160 cm and 95% meteorology. The χ/Q value for the CW and the surface roughness and meteorology value for the MOI were also used for calculating chemical consequences.

Tornado/High Wind Event (SSRT Area Spills and Fires Scenario)

For the CW, the TED values were calculated utilizing the prescribed DOE-STD-1189 (Ref. 132) χ/Q value of 3.5E-03 seconds/meter^3. For the MOI, the TED values were calculated for a surface roughness of 160 cm and 95% meteorology. The χ/Q value for the CW and the surface roughness and meteorology value for the MOI were also used for calculating chemical consequences.

Tornado/High Wind Event (Building 210-Z Process Room Spill and Fire Scenario)

For the CW, the TED values were calculated utilizing the prescribed DOE-STD-1189 (Ref. 132) χ/Q value of 3.5E-03 seconds/meter^3. For the MOI, the TED values were calculated for a surface roughness of 160 cm and 95% meteorology. The χ/Q value for the CW and the surface roughness and meteorology value for the MOI were also used for calculating chemical consequences.

3.4.2.1.4 Comparison to the Evaluation Guideline

Tornado/High Wind Event (SSRT Explosion Scenario)

The consequence analysis for this event determined that the bounding radiological consequences to the CW and Public are ≤ 7 rem and <0.1 rem, respectively (Ref. 138). Per Reference 41, the radiological consequences for this scenario do not exceed the EGs for workers (100 rem) or challenge the EGs for the Public (25 rem). The onsite and offsite chemical consequence analysis for this scenario exceed the EGs for workers (PAC-3) but not the Public (PAC-2) (Ref. 139). Therefore, SS controls are required to protect the CW from this event. No mitigated consequence analysis is required since this event is prevented.

Tornado/High Wind Event (Full Facility Spills and Fires Scenario)

The consequence analysis for this event determined that the bounding radiological consequences to the CW and Public are ≤ 35 rem and <0.1 rem, respectively (Ref. 138). Per Reference 41, the radiological consequences for this scenario do not exceed the EGs for workers (100 rem) or challenge the EGs for the Public (25 rem). The onsite and offsite chemical consequence analysis for this scenario exceed the EGs for workers (PAC-3) but not the Public (PAC-2) (Ref. 139). Therefore, SS controls are required to protect the CW from this event. Since the chemical consequences exceed EGs, mitigated consequence analysis is required. The mitigated chemical consequences do not exceed the EGs for workers (PAC-3) (Ref. 139).

Tornado/High Wind Event (SSRT Area Spills and Fires Scenario)

The consequence analysis for this event determined that the bounding radiological consequences to the CW and Public are ≤ 28 rem and <0.1 rem, respectively (Ref. 138). Per Reference 41, the radiological consequences for this scenario do not exceed the EGs for workers (100 rem) or challenge the EGs for the Public (25 rem). The onsite and offsite chemical consequence analysis for this scenario exceed the EGs for workers (PAC-3) but not the Public (PAC-2) (Ref. 139). Therefore, SS controls are required to protect the CW from this event. Since the chemical consequences exceed EGs, mitigated consequence analysis is required. The mitigated chemical consequences do not exceed the EGs for workers (PAC-3) (Ref. 139).

Tornado/High Wind Event (Building 210-Z Process Room Spill and Fire Scenario)

The consequence analysis for this event determined that the bounding radiological consequences to the CW and Public are ≤ 18 rem and <0.1 rem, respectively (Ref. 138). Per Reference 41, the radiological consequences for this scenario do not exceed the EGs for workers (100 rem) or challenge the EGs for the Public (25 rem). The onsite and offsite chemical consequence analysis for this scenario exceed the EGs for workers (PAC-3) but not the Public (PAC-2) (Ref. 140). Therefore, SS controls are required to protect the CW from this event. Since the chemical consequences exceed EGs, mitigated consequence analysis is required. The mitigated chemical consequences do not exceed the EGs for workers (PAC-3) (Ref. 140).

3.4.2.1.5 Summary of Controls

In addition to the initial condition controls stated in Section 3.3.2.3, the following SS control is required to ensure that the consequences of a Tornado/High Wind Event does not exceed the Onsite EGs and also to further reduce the associated risk (as discussed earlier in the mitigated accident progression).

The following controls performs an SS safety function:

Severe Weather Response Program:

The Severe Weather Response Program is a SAC to perform the following functions:

- Secure transfers from the SSRT(s) and SFT upon a tornado warning or high wind warning
- Secure SSRT agitator(s) operation upon a tornado warning or high wind warning

CSTF Transfer Termination and Isolation During/Following NPH Events:

The CSTF Transfer Termination and Isolation During/Following NPH Events is a SAC to perform the following functions:

- Terminate transfers from CSTF and establish a siphon break upon a tornado watch/tornado warning/high wind warning (SAC)

3.4.2.2 Seismic Event

The Seismic Event results in a potential SSRT explosion.

3.4.2.2.1 Scenario Development

Seismic Event (SSRT Explosion Scenario)

This event scenario addresses a detonation of the SSRT due to the presence of flammable vapors in the vapor space. The resulting explosion fails the tank and hazardous material is released to the environment.

The HA classifies the Seismic Event (SSRT Explosion Scenario) in the Unlikely frequency bin (unmitigated) based on the Seismic Event only. No detailed frequency analyses were performed to lower the assumed frequency. Though not credited, normal operating procedures and the low probability of an ignition source being present with the vapor space above 100% of the CLFL significantly reduce the probability of an SSRT explosion.

The unmitigated accident progression involves the following:

- SSRT agitator is running with salt solution processing in progress
- Seismic Event occurs causing salt solution transfers into and out of the SSRT to stop, leaving the SSRT stagnant
- SSRT agitator continues to run for greater than ~108 hours (Ref. 137)

- SSRT agitator running causes salt solution temperature to increase to 55°C (Ref. 137)
- Flammable vapors accumulate in the SSRT vapor space exceeding CLFL and ignite (ignition source is assumed present)
- Explosion breaches the SSRT and spills tank contents

The mitigated accident progression involves the following:

- SSRT agitator is running with salt solution processing in progress
- Seismic Event occurs causing salt solution transfers into and out of the SSRT to stop, leaving the SSRT stagnant
- Event Response Program (First LOC) secures SSRT agitator(s) operation following a Seismic Event (SAC)

Since the agitator is the main source of heat input into the SSRTs, the Event Response Program prevents the SSRT explosion by removing the heat source. Given the time required to reach CLFL due to heating the SSRT, the seismically induced SSRT explosion is prevented. No mitigated analysis is required.

3.4.2.2.2 Source Term Analysis

Offsite and Onsite ST and dose calculations are based on the methodologies discussed in Section 3.4.1.

Seismic Event (SSRT Explosion Scenario)

The following inputs and assumptions were used to determine the SSRT explosion ST and are taken from References 136, 137, and 138:

- Salt solution temperature maintained ≤ 40°C
- Maximum salt solution volume in the SSRT is 65,500 gallons
- SSRT agitator is 15 horsepower with an 85% efficiency
- ARF*RF for aqueous spills < 3 meters is 1E-04
- ARR*RF for aqueous spill resuspension is 4E-06/hr
- LPF is 1.0

The volume of salt solution in the SSRT when the explosion occurs also contributes to the total ST by spilling onto the ground and being resuspended. This spill and resuspension ST is summed with the explosion ST to determine a total ST for the explosion event. For short duration events (explosions) in chemical analysis, resuspension is insignificant since the duration is only 15 minutes. A parametric analysis based on SSRT liquid level was performed to determine the bounding total ST.

3.4.2.2.3 CONSEQUENCE ANALYSIS

The DOE-STD-1189 χ/Q value was used for the CW and the MACCS2 computer code was used for the MOI in calculating the TED values for this event (Ref. 95).

Seismic Event (SSRT Explosion Scenario)

For the CW, the TED values were calculated utilizing the prescribed DOE-STD-1189 (Ref. 132) χ/Q value of 3.5E-03 seconds/meter^3. For the MOI, the TED values were calculated for a surface roughness of 160 cm and 95% meteorology. The χ/Q value for the CW and the surface roughness and meteorology value for the MOI were also used for calculating chemical consequences.

3.4.2.2.4 Comparison to the Evaluation Guideline

Seismic Event (SSRT Explosion Scenario)

The consequence analysis for this event determined that the bounding radiological consequences to the CW and Public are ≤ 7 rem and <0.1 rem, respectively (Ref. 138). Per Reference 41, the radiological consequences for this event do not exceed the EGs for workers (100 rem) or challenge the EGs for the Public (25 rem). The onsite and offsite bounding chemical consequence analysis for this event exceed the EGs for workers (PAC-3) but not the Public (PAC-2) (Ref. 139). Therefore, SS controls are required to protect the CW from this event. No mitigated consequence analysis is required since the explosion event is prevented.

3.4.2.2.5 Summary of Controls

In addition to the initial condition controls stated in Section 3.3.2.3, the following SS control is required to ensure that the consequences of a Seismic Event do not exceed the Onsite EGs and also to further reduce the associated risk (as discussed earlier in the mitigated accident progression).

The following control performs an SS safety function:

Event Response Program:

The Event Response Program is a SAC to secure SSRT agitator(s) operation following a Seismic Event.

3.4.3 BEYOND DESIGN BASIS ACCIDENTS

Beyond Design Basis Accidents (BDBAs) are accidents of the same type as a DBA (e.g., spill, explosion, earthquake), but defined by parameters that exceed in severity the parameters defined for the DBA. This category also includes those accidents whose consequences were not evaluated because the likelihood of occurrence for the event was categorized as BEU (frequency of occurrence less than 1.0E-06/yr).

DOE-STD-3009-94 (Ref. 2) requires the evaluation of accidents beyond the design basis to provide a perspective of the residual risk associated with the operation of a facility. Such BDBAs are not required to provide assurance of public health and safety. The BDBA analyzed was the SDU Explosion Event.

The Facility CHA (Ref. 6) concludes that the SDU Explosion Event is not credible due to a set of initial conditions that protect process assumptions. If those initial conditions (e.g., grout height,

organic composition) are ignored and the SDU Explosion Event is deemed credible, it would yield the bounding consequences for the facility. Thus it was chosen as the BDBA.

The consequences for the SDU Explosion Event evaluated in the preliminary versions to References 123 and 142 were determined to not challenge the offsite (Public) EG. Using the updated TED value with the more recent meteorological data (Ref. 150), the SDU 3 Explosion Event would not challenge the offsite EG and the SDU 6 Explosion Event would not exceed the offsite EG.

This BDBA does not drive additional controls because normal Saltstone Facility operations make the credited initial conditions more than sufficient to ensure the SDU Explosion Event is not credible.

3.5 REFERENCES

1. Nuclear Safety Management, Subpart B, Title 10 Code of Federal Regulations (CFR) Part 830, Safety Basis Requirements. U.S. Department of Energy, Washington DC, January 2001.

2. Preparation Guide for U.S. Department of Energy Nonreactor Nuclear Facility Documented Safety Analyses. DOE-STD-3009-94, Change Notice No. 3, U.S. Department of Energy, Washington DC, March 2006.

3. Hazard Categorization and Accident Analysis Techniques for Compliance with DOE Order 5480.23 Nuclear Safety Analysis Reports. DOE-STD-1027-92, Change Notice No. 1, U.S. Department of Energy, Washington DC, September 1997.

4. Deleted

5. Standards/Requirements Identification Document. SRR-RP-2009-00558.

6. Saltstone Facility Consolidated Hazard Analysis (U). WSRC-TR-2001-00574, Rev. 18.

7. Deleted

8. Deleted

9. Deleted

10. Deleted

11. Deleted

12. Deleted

13 Deleted

14. Deleted

15. Deleted

16. Deleted

17. Deleted

18. Deleted

19. Deleted

20. Deleted

21. Deleted

22. Deleted

23. Deleted

24. Deleted

25. Deleted

26. Deleted

27. Deleted

28. Deleted

29. Deleted

30. Deleted

31. Deleted

32. Deleted

33. Deleted

34. Employee Safety Manual. Procedure Manual 8Q.

35. Facility Safety Document Manual. Procedure Manual 11Q.

36. Deleted

37. Consolidated Hazard Analysis Process (CHAP) Program and Methods Manual. SCD-11.

38. Airborne Release Fractions/Rates and Respirable Fractions for Nonreactor Nuclear Facilities. DOE-HDBK-3010-94, Volume 1 – Analysis of Experimental Data, Reaffirmed, U.S. Department of Energy, Washington DC, April 2013.

39. Deleted

40. Deleted

41. Conduct of Engineering and Technical Support. Procedure Manual E7, Procedure 2.25, Functional Classifications.

42. Deleted

43. Deleted

44. Performance Assessment for the Saltstone Disposal Facility at the Savannah River Site. SRR-CWDA-2009-00017, Rev. 0.

45. Material Safety Data Sheet, Coal Ash. SRS Material Safety Data Sheet Information System, MSDS No. 32034-1, South Carolina Electric & Gas Company.

46. Material Safety Data Sheet, Granulated Blast-Furnace Slag (GBFS). SRS Material Safety Data Sheet Information System, MSDS No. 34240-1, Holcim (US) Inc.

47. Material Safety Data Sheet, Portland Cement. SRS Material Safety Data Sheet Information System, MSDS No. 35563-1, Holcim (US) Inc.

48. Deleted

49. Nuclear Criticality Safety Evaluation for Z-Area (U). N-NCS-Z-00001, Rev. 13.

50. Site Item Reportability and Issue Management. Procedure Manual 9B.

51. Deleted

52. Deleted

53. Deleted

54. Deleted

55. Deleted

56. Deleted

57. Deleted

58. Deleted

59. Deleted

60. Deleted

61. Deleted

62. Deleted

63. Deleted

64. Deleted

65. Deleted

66. Deleted

67. Recommended Saltstone Facility Radiological and Chemical WAC and Permit Limits for Development of Tank 50H Material Balance (U). WSP-SSF-2004-00015, Rev. 1.

68. Deleted

69. Deleted

70. NESHAP Evaluation: Saltstone Processing Facility, 0.2 Curie/Gallon Low Curie Salt (LCS) Feed Mixer at Vault Road Concept (MAVRC). ESH-EPG-2004-00299.

71. Deleted

72. Deleted

73. Deleted

74. Deleted

75. Deleted

76. Deleted

77. Deleted

78. Deleted

79. Deleted

80. Deleted

81. John, E.O. Radioactive Spill in Z-Area (U). ORPS Report # EM-SR-WSRC-WSALT-1992-0003 Rev. 2.

82. King, D.J. Process Upset/Overflow to Outside Controlled Area. ORPS Report # EM-SR-WSRC-WSALT-2002-0002, Rev. 0.

83. Material Safety Data Sheet, Sodium Hydroxide in Aqueous Solution. SRS Material Safety Data Sheet Information System, MSDS No. 15353-2, Old World Industries, Inc.

84. Deleted

85. Deleted

86. Deleted

87. Deleted

88. "Saltstone Safety Analysis Input Deck". http://pceweb.srs.gov/inputdeck. Savannah River Remediation LLC, Aiken SC.

89. Deleted

90. Hydrogen Generation Rates for Tank Farm Applications. WSRC-TR-98-00303, Rev. 0.

91. Deleted

92. Review of Benzene, Toluene, and Ammonia Release from Curing Saltstone. SRNL-PSE-2008-00172, Rev. 0.

93. Deleted

94. Deleted

95. Total Effective Dose Factors for Saltstone Waste Streams. U-CLC-Z-00020, Rev. 0.

96. Deleted

97. Deleted

98. Deleted

99. Johnson, C.J. to Patten, E., Path Forward: Saltstone Vault 4 Airborne Releases. LWO-WSE-2008-00020, Rev. 1.

100. Hunt, P.D. to Olson, L.D., Independent Technical Review of the Saltstone Vault 4 Vent Contamination. LWO-CES-2008-00011, West Valley Environmental Services LLC, West Valley NY, March 2008.

101. Deleted

102. Deleted

103. Deleted

104. Saltstone Backfit Analysis Package Vault 4 Cell Vents Safety Significant. G-BFA-Z-00001, Rev. 0.

105. Saltstone Backfit Analysis Package Saltstone Disposal Units (SDUs) 2, 3, 4, & 5 Cell Passive Vents Safety Significant. G-BFA-Z-00001, Rev. 7.

106. Deleted

107. Deleted

108. Thermal Mixing in the Saltstone Vault 2-Type Cell Vapor Space (U). S-CLC-Z-00081, Rev. 1.

109. Saltstone Facility SDU 2 and SDU 3/5 Flammability Analysis (U). S-CLC-Z-00080, Rev. 1.

110. Deleted

111. Deleted

112. Consolidated Hazard Analysis for Modifications to the Saltstone Facility Process Room in Support of the Enhanced Low Activity Waste Disposal (ELAWD) Project. S-CHA-Z-00003, Rev. 3.

113. Deleted

114. Deleted

115. Deleted

116. Evaluation of Molecular Diffusion of Flammable Gases for Saltstone Cell Vapor Space (U). S-CLC-Z-00071, Rev. 0

117. U.S. Nuclear Regulatory Commission, Regulatory Guide 1.145, Atmospheric Dispersion Models for Potential Accident Consequence Assessments at Nuclear Power Plants. Rev. 1, November 1982.

118. U.S. Nuclear Regulatory Commission, Proposed Revision 1 to Regulatory Guide 1.23, Meteorological Programs in Support of Nuclear Power Plants. September 1980.

119. Schwenker, J. to Winkler, C. DOE-STD-3009-94 Regulatory Compliance in Preparation of Safety Basis Inputs for the Radiological Dispersion and Consequence Code (U).

SRR-CES-2011-00045, Rev. 0, Savannah River Remediation LLC, Aiken SC, September 2011.

120. Deleted

121. Deleted

122. Measurement of Ammonia Release from Saltstone. SRNL-STI-2008-00399, Rev. 0.

123. Consolidated Hazard Analysis for Saltstone Disposal Units 3 and 5 Project. S-CHA-Z-00004, Rev. 3.

124. Shah, S.C., et al. to Sonnenberg, L.K. et al., Saltstone Grout Pump Failure Event & Process Recovery (U). SRR-WSE-2011-00202, Rev. 0.

125. Deleted

126. Evaluation of Well-Mixed Condition for Saltstone Cell Vapor Space (U). S-CLC-Z-00069, Rev. 0.

127. Deleted

128. Deleted

129. Deleted

130. Natural Phenomena Hazards Analysis and Design Criteria for DOE Facilities. DOE-STD-1020-2012, U.S. Department of Energy, Washington DC, December 2012.

131. Facility Safety. DOE Order 420.1C, Change 1, U.S. Department of Energy, Washington DC, February 2015.

132. Integration of Safety into the Design Process. DOE-STD-1189-2008, U.S. Department of Energy, Washington DC, March 2008.

133. Natural Phenomena Hazards Performance Categorization Guidelines for Structures, Systems and Components. DOE-STD-1021-93, Change Notice No. 1, U.S. Department of Energy, Washington DC, January 1996.

134. Consolidated Hazard Analysis for the Saltstone Facility Salt Solution Receipt Tank (SSRT) Project. S-CHA-Z-00001, Rev. 4.

135. Saltstone SSRT Tank Flammability Analysis (U). S-CLC-Z-00073, Rev. 3.

136. SSRT and SFT Explosion Accident Analysis (U). S-CLC-Z-00089, Rev. 3.

137. Limiting Thermal Response of Salt Solution Receipt Tanks (SSRT) (U). S-CLC-Z-00098, Rev. 3.

138. Radiological Consequence Analysis for the Saltstone Consolidated Hazard Analysis Process (CHAP) (U). S-CLC-Z-00077, Rev. 1.

139. Saltstone Chemical Consequence Analysis for Natural Phenomena Hazards (U). S-CLC-Z-00096, Rev. 2.

140. Saltstone Facility Chemical Consequence Analysis for Fire Scenarios (U). S-CLC-Z-00090, Rev. 2.

141. Dimethylmercury Contribution to Saltstone Facility Vault Flammability (U). S-CLC-Z-00117, Rev. 0.

142. Consolidated Hazard Analysis for Saltstone Disposal Unit 6 Project. S-CHA-Z-00005, Rev. 2.

143. Saltstone Facility SDU 6 Flammability Analysis (U). S-CLC-Z-00115, Rev. 2.

144. Dose Coefficients for Intakes of Radionuclides by Workers: A Report of a Task Group of Committee 2 of the International Commission on Radiological Protection Replacement of ICRP Publication 61, Annals of the ICRP. ICRP (1994), ICRP Publication 68, Volume 24, Number 4, Pergamon Press, New York NY.

145. Saltstone Disposal Unit 6 Temperature Profiles During Grout Pouring. M-CLC-Z-00111, Rev. 0.

146. Deleted

147. Roughness Lengths for the Savannah River Site. SRNL-STI-2012-00016, Rev. 1.

148. Deleted

149. Green, M.J. Victaulic Coupling Failure in Grout Line During Pig Launch. ORPS Report # EM-SR-SRR-WSALT-2014-0001, Rev. 0.

150. Hope, E., Unit Total Effective Dose Factors for Onsite and Offsite Receptors at SRS (U). S-CLC-G-00372, Rev. 3.

151. Saltstone SFT Tank Flammability Analysis (U). S-CLC-Z-00055, Rev. 3.

3.6 TABLES

Table 3.6-1 Frequency Evaluation Levels

Acronym	Description	Frequency Level (f)
A	Anticipated	$f \geq 10^{-2}$/yr
U	Unlikely	$10^{-2} > f \geq 10^{-4}$/yr
EU	Extremely Unlikely	$10^{-4} > f \geq 10^{-6}$/yr
BEU	Beyond Extremely Unlikely	10^{-6}/yr $> f$

Table 3.6-2 Consequence Evaluation Level for Hazard Receptors

Consequence Level (Abbreviation)		Offsite Public	Facility Worker	Collocated Worker
High (H)	Non-rad/Non-chemical Injury**		Prompt worker fatality, serious injury that is immediately life threatening or permanently disabling	Prompt worker fatality, serious injury that is immediately life threatening or permanently disabling
	Radiological	C ≥ 25.0 rem	C ≥ 100 rem or radiological material quantity exceeds HC-3 threshold (per DOE-STD-1027) or high consequence injury due to radiological release or exposure	C ≥ 100 rem or high consequence injury due to radiological release or exposure
	Chemical	C ≥ PAC-2	Uniform distribution of total release C ≥ PAC-3 or high consequence injury due to chemical release or exposure	C ≥ PAC-3 or ≥ 29 CFR 1910.119 TQ released or high consequence injury due to chemical release or exposure
Moderate (M)	Non-rad/Non-chemical Injury		Serious injury, no immediate loss of life, no permanent disabilities, hospitalization required	Serious injury, no immediate loss of life, no permanent disabilities, hospitalization required
	Radiological	5.0 ≤ C < 25 rem	25 ≤ C < 100 rem or moderate consequence radiological related injury	25 ≤ C < 100 rem or moderate consequence radiological related injury
	Chemical	PAC-1 ≤ C < PAC-2	Uniform distribution of total release PAC-2 ≤ C < PAC-3 or moderate consequence chemical related injuries	PAC-2 ≤ C < PAC-3 or moderate consequence chemical related injuries
Low (L)	Non-rad/Non-chemical Injury		Minor injuries, no hospitalization	Minor injuries, no hospitalization
	Radiological	0.5 ≤ C < 5.0 rem	5.0 ≤ C < 25 rem or low consequence radiological related injuries	5.0 ≤ C < 25 rem or low consequence radiological related injuries
	Chemical	PEL-TWA ≤ C < PAC-1	Uniform distribution of total release PAC-1 ≤ C < PAC-2 or low consequence chemical related injuries	PAC-1 ≤ C < PAC-2 or low consequence chemical related injuries
Negligible (N)	All	< Low	< Low	< Low

** SS required in nuclear facilities for prompt fatality, life threatening, or permanently disabling injuries for non-rad/non-chemical events that are not covered by national codes and standards.

Table 3.6-3 Deleted

Table 3.6-4 Risk Criteria Matrix – Public, Collocated and Facility Worker

Frequency → / Consequence ↓	Beyond Extremely Unlikely ($f < 10^{-6}$/yr)	Extremely Unlikely ($10^{-6} \leq f < 10^{-4}$/yr)	Unlikely ($10^{-4} \leq f < 10^{-2}$/yr)	Anticipated ($f \geq 10^{-2}$/yr)
High	**C/A3***	**A2**	**A1**	**A1**
Moderate	**C/B1**	**B1**	**B1**	**B1**
Low	**C**	**B**	**B**	**B**
Negligible	**C**	**C**	**C**	**C**

Key:

A1 **Region A1**
Unmitigated events in Region "A1" due to radiological release require controls (SC for public and SS for workers), and are **highly recommended** for additional Levels of Control (LOC) for all receptors per Ref. 41. Unmitigated events in Region "A1," due to chemical release or prompt fatality (etc.), require SS controls and **highly recommended** for additional LOC per Ref. 41. The goal is that the mitigated consequence is moved well into the B region, and possibly the "C" region or the event is prevented.***

A2 **Region A2**
Unmitigated events in Region "A2" due to radiological release require controls (SC for the public and SS for workers), and are **recommended** for additional Levels of Control for all receptors per Ref. 41. Unmitigated events in Region "A2," due to chemical release or prompt fatality (etc.), require SS controls and **recommended** for additional Levels of Control per Ref. 41. The goal is that the mitigated consequence is moved well into the B region, and possibly the "C" region or the event is prevented.***

A3 **Region A3**
Unmitigated events considered credible per E7, 2.25 falling in Region "A3" due to radiological release require controls (SC for the public and SS for workers), and are considered for additional LOC for CW or public per Ref. 41. Unmitigated events falling in Region "A3," due to chemical release or prompt fatality (etc.), require SS controls and consideration for additional LOC per Ref. 41. The desired result is that the mitigated consequence is moved into the "B" or "C" region, or the event is prevented."***

B1 **Region B1**
For unmitigated events having moderate "B1" consequences SC controls should be selected for radiological events affecting the public. Justification must be provided when SC controls are not implemented. For all other unmitigated events having moderate "B1" consequences, facility controls and/or safety programs should be selected. Justification must be provided when facility controls or safety programs are not implemented.

B **Region B**
Unmitigated events having low "B" consequences may require facility controls or safety programs. Justification must be provided when facility controls or safety programs are not implemented

C **Region C**
Events falling in Region "C" are not considered for controls. However, there may be events in this region that require the addition of facility Controls because the frequency is higher than desired, the occurrence of the uncontrolled event is unacceptable to management in any event, or the uncontrolled event is unacceptable for programmatic or political reasons.

*** NPH , external events, and internal events in this frequency bin shall be addressed as required by E7, 2.25, att. 8 8, Section 8.8.1.**
***** When a preventive control strategy is used, there is no requirement to make the event BEU. See E7, 2.25 (Ref. 41).**

Table 3.6-5 Deleted

Table 3.6-6 Salt Solution Radionuclide Waste Stream Summary

Radionuclide (1)	Decay Type (α, β/γ)	Bounding Concentration (Ci/gal) (2)
Co-60	β/γ	4.73E-03
Sr-90	β/γ	3.97E-02
Y-90	β/γ	3.97E-02
Tc-99	β/γ	1.78E-02
Ru-106	β/γ	4.73E-03
Cs-137	β/γ	2.00E-01
Pm-147	β/γ	2.37E-02
Eu-154	β/γ	9.46E-03
U-232	α	3.43E-05
U-233	α	4.73E-05
U-234	α	4.73E-05
U-236	α	4.73E-05
U-238	α	4.73E-05
Pu-241	β/γ	3.52E-03
Total α (3)	α	1.01E-03

Notes:

1 Radionuclides that are major contributors to radiological dose. These are radionuclides that contribute 0.10% or greater of the inhalation dose potential (Ref. 88).

2 Bounding concentrations are taken from Reference 88.

3 Total α bounds all those alpha-emitting radionuclides that are transuranic (TRU) radionuclides. TRU waste is defined as waste containing more than the total alpha NRC Class C concentration of 100 nCi/g including those alpha-emitting radionuclides having an atomic number greater than 92, and a half-life longer than 5 years. The Total α limit cannot be exceeded because TRU waste is not allowed to be disposed of at the Saltstone Disposal Facility (SDF). For all the radionuclides contributing to the Total α limit, Pu-239 is selected because it has the highest DCF of the TRU isotopes expected to be present in significant quantities.

Table 3.6-7 Salt Solution Chemical Concentrations for Consequence Determination

Chemical Form	Chemical Concentration (mg/L) Note (1)
Solvated Ions	
Sodium Aluminate	4.71E+05
Sodium Tetrahydroxoaluminate	3.64E+05
Ammonia	2.20E+02
Sodium Carbonate	2.83E+05
Sodium Chloride	1.75E+04
Sodium Formate	1.28E+04
Sodium Fluoride	1.20E+04
Sodium Glycolate	1.58E+04
Sodium Hydroxide	3.08E+05
Sodium Nitrate	6.54E+05
Sodium Nitrite	4.27E+05
Sodium Oxalate	5.53E+04
Calcium Oxalate	1.00E+04
Sodium Phosphate	7.23E+04
Sodium Sulfate	1.12E+05
Calcium Sulfate	1.06E+04
RCRA Metals	
Sodium Arsenate	7.27E+02
Cadmium Hydroxide	5.38E+02
Sodium Chromate	6.23E+03
Lead Hydroxide	1.16E+03
Lead (II) Sulfate	1.46E+03
Mercuric Oxide	3.87E+02
Dimethyl Mercury	1.10E+00
Monomethyl Mercury	3.85E+02
Ethyl Mercury	4.10E+02
Elemental Mercury	3.58E+02
Sodium Selenite	1.10E+03
Silver (I) Hydroxide	9.55E+02
Barium Sulfate	1.40E+03

Table 3.6-7 Salt Solution Chemical Concentrations for Consequence Determination (cont'd)

Chemical Form	Chemical Concentration (mg/L) Note (1)
Other Metals	
Sodium Borate	1.17E+04
Calcium Fluoride	6.10E+03
Calcium Sulfate	1.06E+04
Calcium Carbonate	7.82E+03
Calcium Phosphate	8.07E+03
Cerium Hydroxide	1.39E+03
Cesium Nitrate	1.50E+03
Cesium Hydroxide	1.15E+03
Cobalt (III) Hydroxide	3.60E+02
Cupric Hydroxide	1.52E+03
Ferric Hydroxide	1.26E+04
Lithium Hydroxide	3.42E+03
Magnesium Hydroxide	2.45E+03
Manganese Dioxide	1.57E+03
Sodium Molybdate	2.12E+03
Neodymium Hydroxide	1.38E+03
Nickel (II) Hydroxide	1.56E+03
Potassium Nitrate	1.04E+05
Ruthenium (IV) Oxide	1.35E+03
Silicon Dioxide	3.04E+04
Strontium Carbonate	1.67E+03
Titanium Dioxide	1.70E+03
Zinc Hydroxide	1.63E+03
Zirconium Hydroxide	1.58E+03
Suspended Hydrated Sludge Solids	
Aluminum Hydroxide	3.21E+05
Chromium (III) Hydroxide	3.27E+03
Lead Carbonate	1.06E+03
Uranyl Hydroxide	2.71E+02

Table 3.6-7 Salt Solution Chemical Concentrations for Consequence Determination (cont'd)

Chemical Form	Chemical Concentration (mg/L) Note (1)
Organic Compounds	
Potassium Tetraphenylborate (KTPB)	6.17E+00
Tributylphosphate (TBP)	1.00E+01
Sodium EDTA	5.45E+02
Phenol (as sodium phenolate)	1.03E+03
Butanol	1.03E+01
Propanol	2.50E+00
Benzene Note (2)	4.13E+02
Methanol	2.50E+00
Toluene Note (3)	4.13E+02
Isopar® L	8.75E+01 Note (4)
BOBCalix C6 Note (5)	2.00E+02
Trioctylamine (TOA) Note (5)	2.00E+02
Cs7SB	2.00E+02
Xylene Note (3)	3.34E+00
NORPAR™ 13	1.00E+00
Dibutylphosphate	4.62E+02

Note 1: These values are from the Saltstone Facility Safety Analysis Input Deck (Ref. 88). Units in mg/L unless otherwise noted.

Note 2: Benzene is included in this input because it is a degradation product from Tetraphenylborate (TPB)

Note 3: Toluene and xylene are released from the dry feeds when mixed with salt solution.

Note 4: Flammability calculations use Isopar® L in units of ppm, which provides a more conservative vapor space concentration than units of mg/L.

Note 5: Values in Table are for BOBCalix-based Solvent. For chemical hazard analysis, NGS or a blend of BOBCalix-based Solvent and NGS, the maximum source terms for staying within the chemical PAC limits for MaxCalix and TiDG are considered to be equivalent for those established for BOBCalixC6 and TOA (Ref. 88).

Table 3.6-8	Deleted
Table 3.6-9	Deleted
Table 3.6-10	Deleted
Table 3.6-11	Deleted
Table 3.6-12	Deleted

Table 3.6-13 Saltstone Defense In Depth / Important-to-Safety

DID Item	SSC	Attribute	Event Type	Safety Function
1	SFT Vessel and Appurtenances – TK-0001	Primary Containment	Loss of Containment/Fire	Provide passive containment to minimize the release of material to the environment
2	SDU Cell / SDU	Primary Containment	Loss of Containment	Provide passive containment to minimize the release of material to the environment
	SDU Cell	Primary Containment	Explosion	Provide passive confinement of drainwater/leachate collection header explosion in affected cell to minimize the release of material to the environment
3	Inter-Area Transfer Line (Tank 50H entering CCBT enclosure to SFT) - Core pipe downstream and including FCV-1046 and pressure boundary components	Primary Containment	Loss of Containment/Fire	Provide passive containment to minimize the release of material to the environment
4	SFT Feed Line to Saltstone Mixer - Salt Solution Feed Line and Components	Primary Containment	Loss of Containment	Provide passive containment to minimize the release of material to the Building 210-Z process room or the environment
5	Saltstone Mixer to Grout Pump Grout Transfer Line and Components (contained within the process room)	Primary Containment	Loss of Containment	Provide passive containment to minimize the release of material to the Building 210-Z process room

Table 3.6-13 Saltstone Defense In Depth / Important-to-Safety (continued)

DID Item	SSC	Attribute	Event Type	Safety Function
6	Grout Transfer Line from process room to SDU and pressure boundary components	Primary Containment	Loss of Containment	Provide passive containment to minimize the release of material to the environment
		Primary Containment	Loss of Containment	Provide pressure relief to prevent loss of grout transfer line integrity to minimize release of material to the environment – PSV-8012
7	Drainwater/Leachate Return Line from SDU to SFT – Core pipe and pressure boundary components	Primary Containment	Loss of Containment	Provide passive containment to minimize the release of material to the environment
		Primary Containment	Loss of Containment	Provide pressure relief to prevent loss of leachate return line integrity, to minimize release of material to the environment – PSV-0009, PSV-0010, PSV-0011, PSV-0012 (SDU 4 only)
8	Clean Cap Batch Tank enclosure	Secondary Containment	Loss of Containment/Fire/ External/NPH	Provide passive containment to minimize the release of material to the environment
9	Salt Feed Tank enclosure	Secondary Containment	Loss of Containment/Fire/ External/NPH	Provide passive containment to minimize the release of material to the environment
10	Building 210-Z process room and Salt Feed Tank enclosure via process room floor drain piping to SFT	Secondary Containment	Loss of Containment/Fire	Provide passive containment to minimize the release of material to the environment

Table 3.6-13 Saltstone Defense In Depth / Important-to-Safety (continued)

DID Item	SSC	Attribute	Event Type	Safety Function
11	Facility Process Vessel Ventilation System	Primary Containment	Explosion	Reduce flammable vapors from the Grout Hopper vapor space, Salt Feed Tank vapor space, and the Saltstone Hopper Overflow Container vapor space to maintain combustible gas concentrations less than the CLFL during normal operations
12	Fire Detection/Suppression	Confinement	Fire	1) Provide fire detection and alarm in the Building 210-Z process room to allow response actions to minimize the consequence of the fire 2) Provide fire detection, alarm, and suppression in the Administrative area of the 210-Z Building to minimize the consequence of the fire
13	Salt Feed Tank Level Hi Interlock – LSH-1056	Primary Containment	Loss of Containment/NPH	Close FCV-1046 (Inter-Area Transfer Line) to prevent Salt Feed Tank overflow and prevent material release to the environment (hardwire)
14	Premix Feed Chute Level Hi Interlock - LSH-1114, LSH-1115	Primary Containment	Loss of Containment	Stop liquid feed to the mixer, to minimize the amount of material released from the Building 210-Z process room (software)
15	Leachate Collection Drum Level Hi Interlock – LSH-1003, LSH-1004	Primary Containment	Loss of Containment	Stop Leachate Pump, to minimize the amount of material released to the environment (hardwire)
16	Piping and components above the SSRT enclosure	Primary Containment	Loss of Containment/Fire	Provide passive containment to minimize the release of material to the environment

Table 3.6-13 Saltstone Defense In Depth / Important-to-Safety (continued)

DID Item	SSC	Attribute	Event Type	Safety Function
17	Gravity drain pipe loop with siphon break assembly	Prevent gravity drain and siphon from SSRTs to outside of SSRT enclosure	Loss of Containment/Fire/ NPH	Mitigate event by limiting material released
18	Inter-area transfer line (Tank 50H entering CCBT enclosure to SSRTs) - Core pipe downstream, including FCV-7580 and pressure boundary components	Primary Containment	Loss of Containment	Provide passive containment to minimize the release of material to the environment
19	Core pipe in breezeway between SSRT enclosure and CCBT enclosure	Primary Containment	Loss of Containment/Fire	Provide passive containment to minimize the release of material to the environment
20	Pipe jacket in breezeway between SSRT enclosure and CCBT enclosure	Secondary Containment	Loss of Containment/Fire	Mitigates event by containing leak and directing leak to sump for detection
21	SFT transfer line to SSRTs - transfer line and components	Primary Containment	Loss of Containment	Provide passive containment to minimize the release of material to the environment
22	SSRT enclosure	Secondary Containment	Loss of Containment/Fire/ External/NPH	Provide passive containment to minimize the release of material to the environment
23	SSRT feed line to saltstone mixer - salt solution feed line and components	Primary Containment	Loss of Containment	Provide passive containment to minimize the release of material to the environment
24	SSRT level alarm HiHi interlock – LAHH-7508, LAHH-7528	Primary Containment	Loss of Containment/NPH	Isolate liquid sources to SSRT, prevent overflow

Table 3.6-13 Saltstone Defense In Depth / Important-to-Safety (continued)

DID Item	SSC	Attribute	Event Type	Safety Function
25	SSRT outlet piping to transfer pumps - salt solution suction line and components	Primary Containment	Loss of Containment	Provide passive containment to minimize the release of material to the environment
26	SSRT Process Vessel Ventilation System	Primary Containment	Explosion/NPH	Reduce flammable vapors from the SSRT vapor space to maintain combustible gas concentrations less than the lower flammability limit during normal operations
27	SSRT sump level alarm Hi – LAH-7501, LAH-7521	Secondary Containment	Loss of Containment/NPH	Mitigate event by limiting material released
28	SSRT temperature alarm HiHi interlock – TAHH-7503, TAHH-7523	Prevent additional mechanical heat by securing agitator(s)	Explosion/NPH	Prevent SSRT Explosion
29	SSRT Vessels and Appurtenances – TK-0001, TK-0002	Primary Containment	Loss of Containment	Provide passive containment to minimize the release of material to the environment

SALTSTONE FACILITY

DOCUMENTED SAFETY ANALYSIS

CHAPTER 4

SAFETY STRUCTURES, SYSTEMS, AND COMPONENTS

Revision 15

July 2018

TABLE OF CONTENTS

Page

4.0 SAFETY STRUCTURES, SYSTEMS, AND COMPONENTS 4-1

4.1 INTRODUCTION 4-1

4.2 REQUIREMENTS 4-1

4.3 SAFETY CLASS STRUCTURES, SYSTEMS, AND COMPONENTS 4-1

4.4 SAFETY SIGNIFICANT STRUCTURES, SYSTEMS, AND COMPONENTS 4-2

4.4.1 SDU Cell Passive Vents 4-2

4.4.1.1 Safety Function 4-2

4.4.1.2 System Description 4-2

4.4.1.3 Functional Requirements 4-3

4.4.1.4 System Evaluation 4-3

4.4.1.5 Controls (TSRs) 4-3

4.4.2 Deleted 4-3

4.5 SPECIFIC ADMINISTRATIVE CONTROLS 4-3

4.5.1 Waste Acceptance Criteria Program (SAC 5.6.2.1) 4-4

4.5.1.1 Safety Function 4-4

4.5.1.2 SAC Description 4-4

4.5.1.3 Functional Requirements 4-4

4.5.1.4 SAC Evaluation 4-5

4.5.1.5 Controls (TSRs) 4-8

TABLE OF CONTENTS (continued)

Page

4.5.2 SDU 3 Cell Fill Height (SAC 5.6.2.6) 4-9
4.5.2.1 Safety Function 4-9
4.5.2.2 SAC Description 4-9
4.5.2.3 Functional Requirements 4-9
4.5.2.4 SAC Evaluation 4-10
4.5.2.5 Controls (TSRs) 4-12
4.5.3 Deleted 4-12
4.5.4 Deleted 4-12
4.5.5 Event Response Program (SAC 5.6.2.3) 4-12
4.5.5.1 Safety Function 4-12
4.5.5.2 SAC Description 4-12
4.5.5.3 Functional Requirements 4-13
4.5.5.4 SAC Evaluation 4-13
4.5.5.5 Controls (TSRs) 4-13
4.5.6 Severe Weather Response Program (SAC 5.6.2.4) 4-14
4.5.6.1 Safety Function 4-14
4.5.6.2 SAC Description 4-14
4.5.6.3 Functional Requirements 4-14
4.5.6.4 SAC Evaluation 4-14
4.5.6.5 Controls (TSRs) 4-15

TABLE OF CONTENTS (continued)

Page

4.5.7 SDU 6 Fill Height (SAC 5.6.2.5) 4-15

4.5.7.1 Safety Function 4-15

4.5.7.2 SAC Description 4-15

4.5.7.3 Functional Requirements 4-16

4.5.7.4 SAC Evaluation 4-17

4.5.7.5 Controls (TSRs) 4-20

4.5.8 Prohibited Operations Program (SAC 5.6.2.7) 4-20

4.5.8.1 Safety Function 4-20

4.5.8.2 SAC Description 4-20

4.5.8.3 Functional Requirements 4-21

4.5.8.4 SAC Evaluation 4-22

4.5.8.5 Controls (TSRs) 4-23

4.6 REFERENCES 4-24

4.7 TABLES 4-26

4.8 FIGURES 4-28

TABLES

Page

4.5.2.3-1 ..... Deleted

4.5.2.3-2 ..... Deleted

4.4-1 Safety Significant Structures, Systems, and Components 4-26

4.4-2 Design Criteria Assessment Matrix 4-27

FIGURES

Page

4.4-1 Deleted 4-28

4.0 SAFETY STRUCTURES, SYSTEMS, AND COMPONENTS

4.1 INTRODUCTION

This chapter of the DSA for the Saltstone Facility provides details on those facility SSCs that are designated as SC or SS, and SACs that are designated as SC or SS, based on hazard and accident analyses described in Chapter 3.

There are no SC SSCs or SC SACs warranted by Saltstone hazard or accident analyses as discussed in Section 4.3.

The SS SSCs and SACs identified in this chapter were selected based on the Chapter 3 analysis. Existing SSCs, selected in Chapter 3 to be SS, are evaluated against standardized SS Design Requirements identified in Procedure Manual E7, Procedure 3.41, Backfit Analysis Process (Ref. 6). New SS SSCs are designed to meet SS criteria specified in WSRC-TM-95-1, SRS Engineering Standards Manual (Ref. 39). Evaluation of SS SSCs is discussed in Section 4.4. SS SACs are evaluated qualitatively in accordance with the guidance provided in DOE Standard 1186-2004 (Ref. 9) and discussed in Section 4.5.

4.2 REQUIREMENTS

The content, format, and graded approach guidelines for identifying safety related SSCs in this chapter have been specifically developed in accordance with requirements of the following codes, standards and regulatory documents:

- Title 10 CFR Part 830, Nuclear Safety Management, Subpart B, Safety Basis Requirements (Ref. 1)
- DOE-STD-3009-94, Preparation Guide for U.S. Department of Energy Nonreactor Nuclear Facility Documented Safety Analyses (Ref. 2)
- DOE-STD-1186-2004, Specific Administrative Controls (Ref. 9)
- Procedure Manual E7, Conduct of Engineering and Technical Support, Procedure 2.25, Functional Classification (Ref. 5) (The version and revision is specified in the individual CHAs)
- WSRC-TM-93-9, Functional Classification Methodology Manual (Ref. 40)

4.3 SAFETY CLASS STRUCTURES, SYSTEMS, AND COMPONENTS

Chapter 3 accident analysis did not identify any accident scenarios which would result in challenging the offsite EGs established in Reference 5; therefore, there are no SC SSCs or SC SACs associated with the operation of this facility.

4.4 SAFETY SIGNIFICANT STRUCTURES, SYSTEMS, AND COMPONENTS

In the following sections, the System Description subsection provides a description of the SS SSC and the basic principles by which it performs its safety function, including simplified drawings where appropriate.

SS SSCs are those SSCs with a preventive or mitigative function that is a major contributor to DID and/or worker safety. Generally, SS SSC designations based on worker safety are limited to those SSCs whose failure:

- Is estimated to result in a prompt fatality or serious injury that would result in medical treatment for immediately life-threatening or permanently disabling injuries from other than hazards that are routinely encountered in general industry and construction.

- Would result in a release that would, based on an informed qualitative approach, challenge the Onsite Hazardous Material Criteria (100 rem TED radiological exposure or PAC-3 chemical exposure).

- Are required to ensure that any credible event shall not challenge the PAC-2 Chemical Offsite Evaluation Criteria to an individual member of the public.

More specific SS criterion is given in Reference 5. The SSCs listed in Table 4.4-1 are designated as SS. The table identifies the Chapter 3 accident(s) or rationale upon which the SS designation is based and summarizes the safety function(s), functional requirement(s), and TSR coverage (SAC or DF). Further details regarding the SSCs from Table 4.4-1 are provided below.

4.4.1 SDU CELL PASSIVE VENTS

4.4.1.1 Safety Function

The SDU Cell Passive Vents for SDU 4 Cells B, D, E, F, H, J, K, and L and SDU 2/3/5 Cells A and B, provide a flow path between the SDU vapor space and atmosphere. The vents aid in minimizing the potential for reaching CLFL conditions inside an SDU by allowing air displaced by the grout being poured to exit the SDU cell (e.g., SDU 3 Cell A) and allowing passive breathing of the SDU cell (e.g., SDUs 2, 3, 4, and 5). The passive vents also provide the primary path for the air that is used to purge the cell vapor space. Two vents are available and will be maintained on top of SDU 4 Cells B, D, E, F, H, J, K, and L, and three vents will be maintained on top of each SDUs 2, 3, and 5 cells. The SDU 2, SDU 3, SDU 4, and SDU 5 Cell Passive Vent's capability to perform the required safety function will be assessed by the Structural Integrity Program.

4.4.1.2 System Description

Each of the Cells B, D, E, F, H, J, K, and L in SDU 4 contains two passive vents on top of the cell. Cells A and B in SDU 2/3/5 contain three passive vents on top of the cell. These vents consist of a short section of 12-inch diameter pipe, filter housing, and rain cap. The passive vents penetrate through the roof at opposite corners for SDU 4 cells and are evenly spaced across

the roof for SDUs 2, 3, and 5 cells. The filter housing is mounted on the vent pipe flange approximately one foot above the roof. A filter assembly (i.e., prefilter and/or HEPA filter) is functionally classified as Production Support (PS) and may be installed in the filter housing for radiological control purposes.

4.4.1.3 Functional Requirements

The SDU Cell Passive Vents provide a flow path between the SDU vapor space and atmosphere. If forced ventilation of the SDU is required, air from outside the SDU is drawn in through the passive vents replacing the air being withdrawn from the SDU vapor space by the SDU Portable Ventilation System.

4.4.1.4 System Evaluation

The SDU Cell Passive Vents for SDU 4 Cells B, D, E, F, H, J, K, and L and SDU 2/3/5 Cells A and B, were designated as passive DFs to provide a flow path between the SDU vapor space and atmosphere. Due to the slow generation of flammable gases from curing grout, failure of the passive vents following an NPH event is not considered to be a credible initiator for a cell explosion event; therefore, the passive vents are not required to meet the NPH criteria of Reference 7. Environmental conditions for the passive vents consist of being able to withstand normal outside weather conditions as well as prevention of potential pluggage of the HEPA filters (when installed). The vents will be visually inspected as part of the Structural Integrity Program to ensure they provide an open flow path between the SDU vapor space and atmosphere. The evaluation is summarized in Table 4.4-2.

4.4.1.5 Controls (TSRs)

This control is designated as a passive DF and included in TSR Section 6.0. TSR Section 5.6.3.1 discusses the Structural Integrity Program, which ensures the function of the SDU Cell Passive Vents.

4.4.2 DELETED

4.5 SPECIFIC ADMINISTRATIVE CONTROLS

SACs were identified in Chapter 3. The Saltstone WAC SAC, the SDU Fill Height SACs, and the Prohibited Operations Program SAC are initial conditions that protect bounding operational parameters that make explosions in SDUs not credible. Additionally, the WAC SAC protects the assumptions upon which the Saltstone hazard and accident analyses are based. All SACs have been developed in accordance with DOE-STD-1186-2004 (Ref. 9) and presented in this section in accordance with the requirements of DOE-STD-3009-94, CN-3 (Ref. 2).

4.5.1 WASTE ACCEPTANCE CRITERIA PROGRAM (SAC 5.6.2.1)

4.5.1.1 Safety Function

The safety function of the Saltstone Facility WAC Program is to protect the bounding initial assumption of the accident analysis that the composition of waste streams received into the facility is within DSA analyzed limits. The supporting analyses for the process locations within the Saltstone Facility (e.g., SDUs, Building 210-Z process room, SSRTs) may be based on different parameters. However, the Saltstone Facility WAC Program is assumed to protect the most limiting values as outlined in Chapter 3. The limits imposed by the WAC consist of 1) inhalation dose potential, 2) flammable vapor contributions, 3) fissile material concentrations, 4) chemical concentrations, and 5) salt solution temperature.

4.5.1.2 SAC Description

The Saltstone Facility WAC Program shall identify the requirements that ensure that the composition of the waste stream received into the facility is within DSA analyzed limits. Controls required to be implemented by interfacing facilities to ensure the implementation of the WAC are identified in Section 5.7, Interface with TSRs from Other Facilities. There are no Saltstone Facility SSCs that can perform the safety function of this SAC. The Saltstone WAC is applicable to waste transferred from Tank 50H to the Saltstone Facility through an inter-area transfer line that connects Tank 50H to the SSRTs and SFT at the Saltstone Facility. Ensuring that the composition is within DSA analyzed limits ensures that the assumptions used in calculating the consequences and in the determination of the credibility of the accidents are maintained.

When sample results are utilized to demonstrate compliance with a limit/requirement, an analytical uncertainty of 2 Sigma (2 σ) shall be included prior to comparing to the limit/requirement (additional information and exceptions are described in Section 5.3). This is applicable to the following limits/requirements: inhalation dose potential, flammable vapor contributions, fissile material concentrations, and chemical concentrations.

Acceptable characterization methods include sample analysis, process knowledge, or a combination of the two. Laboratory Quality Assurance (QA) practices and sample analysis protocols ensure the validity of the results.

4.5.1.3 Functional Requirements

The Saltstone Facility WAC Program shall ensure that the composition of salt solution received into the facility is within DSA analyzed limits (accounting for analytical uncertainty as described in in Section 4.5.1.2) for the following attributes:

- Inhalation Dose Potential
- Flammable Vapor Contributions
- Fissile Material Concentrations
- Chemical Concentrations

Additionally, the WAC Program shall ensure the temperature of the salt solution is within DSA analyzed limits.

Concentrations of butanol, isopropanol, methanol, TBP, and NORPAR™ 13 may be exceeded provided that their cumulative contribution to flammability from all five remains less than or equal to the cumulative value from all five originally determined using methodologies described in Chapter 3 or supporting calculations and they do not exceed the concentrations assumed for chemical consequences. This analysis, when appropriate, may use historical data to demonstrate compliance.

4.5.1.4 SAC Evaluation

The parameters limited by the WAC protect bounding assumptions used in the Saltstone Facility accident analysis.

- The Inhalation Dose Potential Limit of ≤ 2.26E+05 rem/gallon is based upon the cumulative sum of a mixture of radionuclide Dose Conversion Factors multiplied by the bounding radionuclide concentrations for the radionuclides that contribute 0.10% of the Inhalation Dose Potential or greater (Ref. 15). The bounding radionuclide concentrations, shown in Table 3.6-6, were derived from an analysis of the actual concentrations of radionuclides in the CSTF tanks expected to be sent to the Saltstone Facility. The bounding radionuclide concentration values were used in the consequence calculations in the accident analysis. The Saltstone Facility WAC Program ensures that the bounding Inhalation Dose Potential Limit is not exceeded. Verification of the material balance report ensures transfers to the Saltstone Facility do not exceed WAC limits, providing assurance that the consequences determined in the accident analysis will remain bounding.

  The inhalation dose potential of the most significant radionuclides that contribute more than 99% to the DSA limit are characterized by engineering prior to each transfer into Tank 50H. This characterization is based on sampling and analysis (accounting for analytical uncertainty as described in Section 4.5.1.2) or process knowledge. A material balance report of the Tank 50H characterization, which is derived from the CSTF Waste Characterization System, is issued periodically (typically on a monthly basis) by Liquid Waste Engineering in which the concentrations of the most significant radionuclides are verified to be below their limits. The cognizant Saltstone technical function reviews and approves the report before it is issued. Periodic samples are also taken from Tank 50H to confirm the material balance.

- The Saltstone Facility WAC Program shall ensure the salt solution assumptions associated with flammability used in this DSA remain valid. Contributors to flammability of particular concern are benzene, Isopar® L, ammonia, hydrogen, and other flammable volatiles.

  The total mass of TPB received into the Saltstone Facility shall be limited to ensure that no more than 4.15 kg of benzene can be generated. Benzene postulated to be in the salt solution was due to TPB from Tank 50H. As described in Section 3.3.2.1, the estimated amount of TPB determined to be in the CSTF tanks, excluding that in Tank 48H, is 4.76 kg in the form of KTPB. This amount of KTPB is contained in Tank 50H and can generate a

maximum of 4.15 kg of benzene. Further additions of TPB to Tank 50H shall be prohibited. In addition, the transfer of Tank 48H material to the Saltstone Facility shall be prohibited to ensure the DSA limit on TPB received at the Saltstone Facility is not exceeded.

The ammonia concentration in salt solution shall be limited to less than or equal to 200 mg/L. The contribution from ammonia to CLFL is based on the contribution from the salt solution, dry feeds, and chemical reactions. Maintaining the ammonia concentration in salt solution less than 200 mg/L is required to prevent exceeding the assumed contribution to CLFL.

The radiolytic HGR shall be limited to 1.41E-08 ft^3/hr/gal of salt solution in grout at 95°C. The Saltstone Facility WAC Program shall ensure this radiolytic HGR is not exceeded using methodology described in Section 3.3.2.1, Hazard Identification. The radiolytic HGR is based upon the radionuclides that contribute 0.10% of the HGR or greater (Ref. 10).

The TOC, aluminum, and density of salt solution shall be limited to ensure the thermolytic HGR calculated in support of flammability analysis is not exceeded. The combined TOC and aluminum contribution within salt solution shall be limited to less than or equal to 0.05 wt%.

At Isopar® L concentrations up to 11 ppm, SDU 3 cell vapor space remains below CLFL (Ref. 29). Although SDU 6 is designed and analyzed to accept up to 87.5 ppm Isopar® L while maintaining the vapor space below CLFL (Ref. 44), the current WAC limits Isopar® L concentrations to no greater than 11 ppm.

Due to limited process knowledge and sampling capabilities associated with very low Isopar® L concentrations, the following non-SAC items shall be implemented by the CSTF as described in Reference 30:

- A blend calculation shall be performed to specify the allowable total volume of Decontaminated Salt Solution (DSS) that is authorized for transfer from MCU to Tank 50H to ensure the Isopar® L limit will not be exceeded in Saltstone.

- Representative batch sampling and analysis at MCU shall occur to support the material balance and blend calculations.

- Transfers from Tank 50H to the Saltstone Facility shall be from a well-mixed Tank 50H to ensure the Isopar® L concentration is less than the limit.

- A material balance calculation shall be issued periodically to determine the Isopar® L concentration in Tank 50H. The Tank 50H Waste Compliance Plan (WCP) provides the methodology for performing material balance.

A Tank 50H blend calculation is performed to specify the allowable total volume of DSS that is permitted to be transferred from MCU to Tank 50H. This calculation includes a provision for an unanalyzed volume of DSS permitted in Tank 50H with a reasonably conservative assumed Isopar® L concentration. This calculation takes into account the

volume of transfers into and out of Tank 50H. Prior to transfer initiation from MCU to Tank 50H or transfer initiation out of Tank 50H, the transfer volume is verified to be within the bounds of the blend calculation. Transfers out of Tank 50H are monitored to ensure the volume transferred remains within the blend calculation. Prior to transfer, Tank 50H slurry pump(s) are operated to ensure adequate mixing of Isopar® L for transfers from Tank 50H to the Saltstone Facility. This ensures the blend calculation is representative of the Isopar® L concentration sent from Tank 50H (Ref. 30).

For SDUs, the contribution from volatiles in salt solution other than Isopar® L, benzene, hydrogen, and ammonia shall be evaluated using existing SDU flammability methodology. An engineering evaluation may be completed to demonstrate that the Composite Lower Flammability Limit (CLFL) of the SDU vapor space will not exceed 95% at the time the SDU is at the peak percent of CLFL.

If a new flammable species becomes evident in Tank 50H, it shall be evaluated to determine its contribution to flammability in the SSRTs, SFT, and SDUs prior to receiving additional transfers from Tank 50H. The analysis shall determine the percentage of the species LFL utilizing the measured concentration of the species in the vapor space. If the evaluation result is less than or equal to 0.5%, no further action is required. A threshold of 0.5% is appropriate as it has minimal impact to overall results of References 29, 44, 45, 46. Because of this minimal impact, allowance for cumulative additions of species less than or equal to 0.5% of the LFL is not required.

For SDUs, vapor space sampling historically demonstrates that there is only a marginal concentration of flammables in the vapor space. If the result is greater than 0.5%, SDUs 3 and 6 shall be evaluated per Reference 29 and 44 respectively to ensure the peak CLFL remains below 95% at the Maximum Grout Height (Ref. 29, 44). The evaluation may use actual parameters (e.g., pour schedule, pour flow rate, salt solution mass fraction, grout temperature) and constituent concentrations that has been sent to the SDU at the fill height at the time of discovery, but must use DSA inputs and assumptions from that height up to the Maximum Grout Height with the inclusion of the new species. SDUs 2, 4, and 5 have actual measurement data supporting their flammability basis, and will not be reevaluated because SDUs 2 and 5 are operationally filled and SDU 4 is inactive. The grout transfer line has been blanked to SDUs 2 and 5 and is no longer connected to SDU 4.

For SSRTs and SFT, margin is provided in the analysis as the SSRTs and SFT are assumed to be at an elevated temperature and in an overflow condition, minimizing the vapor space (Ref. 45, 46). However, if the result is greater than 0.5%, the SSRTs and SFT are not considered to be within the existing safety analysis.

The Saltstone Facility WAC Program shall ensure this remains valid by ensuring these volatiles are less than the analyzed values or by performing an analysis consistent with Reference 29 (for SDU 3) and Reference 44 (for SDU 6) to show the contribution remains within this limit. Calculations performed to ensure compliance with the WAC shall be performed consistent with Manual E7 which requires verification/checking.

- The fissile material concentrations limits for U-233 (≤ 1.25E+04 pCi/mL), U-235 (≤ 1.25E+02 pCi/mL), Pu-239 (≤ 2.66E+05 pCi/mL), and Pu-241 (≤ 9.31E+05 pCi/mL) are based on the fissile material activity limits used in the NCSE (Ref. 12) that determines that there are no credible criticality scenarios identified for activities involved with the processing and disposal of salt solutions in Z-Area.

  The verification that the bounding fissile material concentration WAC limits are not exceeded is performed in the same manner as that for inhalation dose potential described above. Exceeding the WAC limits for fissile concentrations would exceed the currently analyzed criticality values for the Saltstone Facility (Ref. 12).

- The chemical concentrations in the waste stream received shall be limited in order to protect the assumptions in the hazards analysis. The bounding waste stream is identified in Table 3.6-7. These concentrations are judged to be sufficiently conservative to account for the fact that the salt solution has minor constituents that are not specifically accounted for [i.e., small quantities (less than detection limits in liquid samples) of trace constituents] and/or has slight variations in the compound forms which the chemical constituents may take at a particular point in time. Effects on ST is marginal and further action is not required for these minor constituents.

  The verification that the chemical concentration WAC limits are not exceeded is performed in the same manner as that for inhalation dose potential described above.

- To protect the hazard and accident analyses assumption related to the temperature of the salt solution transferred to the Saltstone Facility from the CSTF, CSTF Operations shall ensure that procedures prescribe the methods necessary to ensure that prior to transfer initiation, Tank 50H average bulk waste temperature is less than or equal to 40°C. Tank 50H temperature instrumentation and monitoring are evaluated in Reference 30. Prior to transfer, verification shall be performed to ensure Tank 50H average bulk waste temperature is less than or equal to 40°C (adjusted for instrument uncertainty). Temperature monitoring of Tank 50H is not required during the transfer due to: 1) the large volume of Tank 50H which creates a large thermal inertia, resistant to rapid temperature fluctuations, and 2) additional heat inputs to Tank 50H is minimized during the transfer (e.g., mixing pumps are stopped). This verification is considered adequate to ensure the salt solution temperature transferred to the Saltstone Facility is less than or equal to 40°C. This temperature limit protects the time to CLFL assumed in flammability analysis, in the event the SSRT agitator(s) remain in operation after grout production operations have been shut down.

4.5.1.5 Controls (TSRs)

The Saltstone Facility WAC Program is a SAC in descriptive format and included in TSR Section 5.6.2.

4.5.2 SDU 3 CELL FILL HEIGHT (SAC 5.6.2.6)

4.5.2.1 Safety Function

The safety function of the SDU 3 Cell Fill Height SAC is to ensure that the minimum vapor space remains in SDU 3 Cells A and B to protect the analysis assumption that a CLFL condition cannot be created in the SDU vapor space when processing (during and following pouring) grout.

4.5.2.2 SAC Description

Controls shall be established to ensure SDU 3 cells are not filled above the specified level. The SDU 3 Maximum Grout Height provides a cell sufficient vapor space volume such that flammable vapor will not reach CLFL during and following the pouring of radioactive grout and/or clean cap grout.

The equipment required to support this SAC are the grout height indicators and proper valve alignment. In the event the SDU 3 Maximum Grout Height SAV is exceeded (which must be adjusted for grout height indicator uncertainty), the SDU Portable Ventilation System is available to minimize the potential for the cell to become flammable. The cells do not have automatic level indication and associated interlocks because of the slow fill rate and the required visual observations of the grout height indicators, which provide clear evidence of the grout height. There is sufficient time for operator action to shut down the process as required to prevent flammable conditions in the vapor space.

4.5.2.3 Functional Requirements

The grout level in SDU 3 cells shall remain less than or equal to the SDU 3 Maximum Grout Height SAV of 7.0 feet (which must be adjusted for grout height indicator uncertainty).

The grout height indicators, according to facility conditions, are required to perform the safety function of this SAC. Direct measurement of the grout height is indicative of the vapor space volume above the grout.

In the event the SDU 3 Maximum Grout Height SAV (which must be adjusted for grout height indicator uncertainty) is exceeded, the following equipment, according to facility conditions may be used to minimize the potential for the vapor space to become flammable:

- SDU Portable Ventilation System
- Portable Flammability Monitors

The grout level in SDU 3 cells shall remain less than or equal to the SDU 3 Maximum Grout Height SAV (which must be adjusted for grout height indicator uncertainty) and shall be ensured as follows:

- Grout height and adequate available fill space shall be verified prior to initiating a pour into SDU 3 when above the cautionary grout height of 5.75 feet. Grout height shall be

determined at a frequency based on operational experience and engineering judgment while pouring and following completion of the grout pour. Instrumentation used for determining grout processing rate shall meet Installed Process Instrumentation (IPI) or Measuring and Test Equipment (M&TE) requirements as described in Section 5.5.2.8.

- If one of the grout height indicators indicate grout level to be greater than the SDU 3 Maximum Grout Height SAV (which must be adjusted for grout height indicator uncertainty) during grout pouring, then stop introduction of salt solution and dry premix feed to the SDU cell.
- If grout height is determined to be greater than the SDU 3 Maximum Grout Height SAV (which must be adjusted for grout height indicator uncertainty) during or following grout pouring, the facility is outside of compliance with this SAC.
    - The facility shall monitor the SDU vapor space and ventilate as required to maintain vapor space less than or equal to 25% CLFL. These actions shall be performed until such time that it can be verified by Engineering Evaluation that the SDU vapor space will be maintained less than or equal to 60% CLFL by passive breathing alone. 60% CLFL provides adequate margin to the CLFL. Flammability monitoring instrumentation shall meet IPI or M&TE requirements as described in Section 5.5.2.8, or
    - The facility shall provide continuous ventilation until an Engineering Evaluation confirms that the SDU vapor space will be maintained less than or equal to 60% CLFL by passive breathing alone. 60% CLFL provides adequate margin to the CLFL. Flow instrumentation for ventilation measurement shall meet IPI or M&TE requirements as described in Section 5.5.2.8.

4.5.2.4 SAC Evaluation

A SAC was chosen to provide this control versus a SSC due to the lack of an existing SSC, the cost of adding equipment, and short life cycle of the SDU. This SAC was selected and is judged to be acceptable for the purpose of protecting the minimum required vapor space for the following reasons and conservatisms:

1. The rate of grout fill is slow. At the bounding rate of production of 180 gpm, the cell fill rate is approximately 1 inch per hour for SDU 3.
2. The uncertainty associated with the indicated level in an SDU 3 cell accounts for mounding of the grout in the center of the cell and the resolution of the indicator. The minimum vapor space is still maintained due to significant vapor space being available between the peak and the cell walls. Therefore, the mound peak may be higher than the fill height, but the majority of the grout is still below the maximum analyzed grout fill height and the minimum vapor space is maintained. The mounding of the grout is accounted for in Reference 29 and the resolution of the grout height indicators are addressed in an uncertainty calculation.
3. The level of grout in the cell is considered at the fill height when one of the grout height indicators indicates grout at that level. If the CCTV is not available, the final grout height may be determined by calculation using the known run time since the last

verification of grout level and the bounding grout pump flow rate of 180 gpm for a conservative estimate or the actual processing rates if available. Instrumentation used for determining grout processing rate shall meet IPI or M&TE requirements as described in Section 5.5.2.8.

4. Monitoring grout height periodically after reaching the cautionary grout height protects the SDU 3 Maximum Grout Height SAV. Monitoring periodically for the last foot of the pour provides sufficient margin to shut down a pour as this is a volume that cannot be poured in one shift, and protects the minimum required vapor space in the SDU.

5. The SDU 3 vapor space flammability is below the CLFL (Ref. 29). The SDU flammability analysis contains several conservative inputs and assumptions (described in detail in Section 3.3.2.3) that support the derived SAV for the SDU 3 Maximum Grout Height (which approaches the CLFL). The conservatisms utilized include:

   - The bulk of the grout monolith (excluding the top and bottom layer) is at the peak temperature for the first 180 days.
   - The monolith is evaluated assuming the flammable constituents are at the maximum concentrations.
   - The pour strategy is aggressive, assumes daily pours using bounding grout pump flow rates and durations until the SDU cell is full, and cannot be achieved with actual pour schedules and existing nominal pour durations and pour flow rates.
   - The SDU 3 Maximum Grout Height is based on the inclusion of an inadvertent transfer of 15,000 gallons of salt solution, which provides some additional conservatism to the grout height.
   - The flammability analysis determines the grout height at the wall, whereas the grout height is actually measured on columns closer to the cell center. This is conservative as this height will be reached sooner on the columns than at the wall if mounding occurs.
   - The grout mound height evaluated is a higher value than what was measured (greater than 1.5 times the measured height).

Permanent grout height indicators installed on three of the internal support columns provide a visual indication of the grout level in SDU 3 cells. Grout height indicators are marked in 3-inch increments and are static, having no mechanical or electrical components, assuring grout height indicator functionality. For SDU 3, the middle of the 3-inch marks is the indicated level which cannot be visually discerned. Once the bottom edge of the 3-inch increment marking is reached, the grout height is then determined to be at the next higher increment. For example, once the 6.5-foot increment is reached, the grout level would be determined to be at 6.75 feet. When the SDU 3 Maximum Grout Height is reached as indicated by one of the grout height indicators, grout disposition to the cell will be discontinued to that cell. The grout height indicators may be viewed by using a CCTV.

Normal operating procedures and system alignment checklists are considered adequate to ensure grout is being poured into the proper cell. This is due to the limited range of operations

performed in the facility and visual indications available for the process. A small leak at a 3-way valve, which is a ball valve, is unlikely due to the design of the valves and if it occurred, a small flow of grout would be expected to set and self-seal over time. 3-way ball valves are effective at providing flow in the desired flow path while minimizing leakage to the undesired flow path. An operator positions the grout transfer line 3-way valves to align the grout transfer line to the desired SDU 3 cell. In order to minimize human error associated with SDU and cell selection, the positioning of the valves is independently verified. Additionally, the use of a CCTV can provide visual indication of proper system alignment to ensure that grout is being poured in the proper cell. Due to the slow fill rate and the time needed to verify flow into the intended cell, only a small quantity of grout would be inadvertently poured into the wrong cell creating a minimal flammability concern.

The following assures functionality of equipment used for this SAC:

- SDU Portable Ventilation System – Nuclear Maintenance Management Program (NMMP) (Section 5.5.2.11)
- Ventilation flow instrumentation - M&TE (Section 5.5.2.8)
- Portable Flammability Monitors - M&TE (Section 5.5.2.8)

4.5.2.5 Controls (TSRs)

The SDU 3 Cell Fill Height is a SAC presented as a directive action SAC in the TSRs. SAC 5.6.2.6 specifies the requirements for this control.

4.5.3 DELETED

4.5.4 DELETED

4.5.5 EVENT RESPONSE PROGRAM (SAC 5.6.2.3)

4.5.5.1 Safety Function

The safety function of the Event Response Program is to secure SSRT agitator(s) operation to prevent heating of the SSRTs and thus an SSRT explosion following a Seismic Event.

4.5.5.2 SAC Description

Event Response Procedures shall be in place addressing post-event required actions for Seismic Events. These procedures shall require the operator to secure SSRT agitator(s) operation within 4 days following a Seismic Event. This SAC serves an SS function for the Seismic Event.

This SAC was chosen as a control over an SSC. The SSC would have been a high temperature interlock on the agitator(s) with a PC-2 seismic qualification or a seismic switch to interlock off the SSRT agitators. The cost associated with qualifying these systems was not justified given the simplicity of the operator action, multiple means of completing the required action, and the delay time to reach a flammable condition following the Seismic Event. The SAC is considered a preventive and cost effective alternative control.

4.5.5.3 Functional Requirements

Following a Seismic Event, SSRT agitator(s) operation can be secured from the control room if available using approved procedures. In addition, several methods of securing agitator(s) operation are accessible and available locally.

4.5.5.4 SAC Evaluation

The following features ensure that the safety function of this SAC is met:

- Task is part of routine operations (familiarity)
- Verified agitator(s) is secured through second person verification
- Multiple locations and methods for performing required actions (e.g., DCS and power disconnects)
- Minimum shift crew requirements (Section 5.5.4)
- Operator training

There is a small vulnerability in implementing the SAC control where the Seismic Event may temporarily limit access to one or more means of completing the required action. This residual vulnerability is an acceptable operating risk given the fail-safe design of supporting SSCs (i.e., the agitators fail safe on loss of DCS signal and loss of power to the agitators and DCS), long response time, and multiple locations available at which the required action can be completed.

Based on the conservatisms in the analysis for the time to reach flammable conditions, additional margin for the response time is not necessary. These conservatisms include utilizing: bounding flammable concentrations (organic and HGR), initial salt solution at the maximum temperature permitted by the WAC of 40°C, hottest day on record at SRS for each day of analysis, maximum agitator power at rated efficiency, and no heat losses across the bottom of the SSRT (Ref. 41, 42).

Securing the agitator(s) using the DCS utilizes a non-safety related system to perform this function. However, reliability of this system is assured via the routine operation of the facility and in the event of a failure of the DCS, there are other means available to achieve the action that do not depend upon the DCS. DCS failures are expected to be apparent to the operator because there are diverse indications available to allow confirmation that the agitator(s) has been secured (temperature indication, etc.). In the event of a total loss of DCS or if confirmatory indications are not available, the agitator(s) may be manually de-energized from multiple locations. Second person verification of proper implementation of this control will minimize the likelihood of human error.

4.5.5.5 Controls (TSRs)

The Event Response Program is a SAC in descriptive format and included in TSR Section 5.6.2.

4.5.6 SEVERE WEATHER RESPONSE PROGRAM (SAC 5.6.2.4)

4.5.6.1 Safety Function

The safety function of the Severe Weather Response Program is to secure SSRT agitator(s) operation (to prevent heating of the SSRTs and thus an SSRT explosion) and secure transfers from the SSRT(s) and SFT (to minimize the potential release) prior to a Tornado/High Wind Event.

4.5.6.2 SAC Description

Upon receipt of a tornado warning or high wind warning issued by the SRSOC for the Saltstone Facility, the following actions shall occur:

- Secure transfers from the SSRT(s) and SFT. Securing a salt solution transfer includes the following: stopping the SSRT transfer pump(s) and the SFT transfer pump, or alternatively, isolating the SSRTs and SFT discharge paths.
- Secure SSRT agitator(s) operation.

This SAC serves an SS function for the Tornado/High Wind Event.

This SAC was chosen as a control over an SSC. One SSC considered was a high wind speed interlock on the transfer pumps and SSRT agitators with a PC-2 high wind qualification. The cost associated with qualifying the considered SSC was not justified given the simplicity and short duration of the operator action (performed as a pre-event response) and multiple means of completing the required action. The SAC is considered a mitigative/preventive and cost effective alternative control.

4.5.6.3 Functional Requirements

This SAC utilizes approved procedures governing shut down or isolation of equipment. The agitator(s) operation and transfers from the SSRT(s) and SFT can be secured or isolated via the control room. In addition, several methods of stopping or isolating equipment are accessible and available locally.

4.5.6.4 SAC Evaluation

The following features ensure that the safety function of this SAC is met:

- Task is part of routine operations (familiarity)
- Verified agitator(s) and transfers are secured (or isolation of discharge path) through second person verification
- Multiple locations and methods for performing required actions (e.g., DCS, valves, power disconnects)
- Minimum shift crew requirements (Section 5.5.4)

- NMMP (Ref. 43) for the SSRT siphon break assembly including the orifice and 3-way valve to ensure the flow path is free of obstructions and restrictions (Section 5.5.2.11)
- Operator training

The required actions for shutdown of transfer pumps are automated through DCS as part of the normal shutdown sequence.

Securing the agitator(s) and stopping the transfer pump(s) or isolating the discharge path using the DCS utilizes a non-safety related system to perform this function. However, reliability of this system is assured via the routine operation of the facility and in the event of a failure of the DCS, there are other means available to achieve the action that do not depend upon the DCS. DCS failures are expected to be apparent to the operator because there are diverse indications available to allow confirmation that the agitator(s) has been secured and transfer pump(s) has been stopped (temperature indication, flow indication, etc.). In the event of a total loss of DCS or if confirmatory indications are not available, the agitator(s) and pump(s) may be manually de-energized from multiple locations and discharge paths may be isolated remotely and locally. Second person verification of proper implementation of this control will minimize the likelihood of human error.

4.5.6.5 Controls (TSRs)

The Severe Weather Response Program is a SAC in descriptive format and included in TSR Section 5.6.2.

4.5.7 SDU 6 FILL HEIGHT (SAC 5.6.2.5)

4.5.7.1 Safety Function

The safety function of the SDU 6 Fill Height SAC is to ensure that the minimum vapor space remains in SDU 6 to protect the analysis assumption that a CLFL condition cannot be created in the SDU vapor space when processing (during and following pouring) grout.

4.5.7.2 SAC Description

Controls shall be established to ensure SDU 6 is not filled above the specified level. The SDU 6 Maximum Grout Height SAV provides sufficient vapor space volume such that flammable vapor will not reach CLFL during and following the pouring of radioactive grout and/or clean cap grout.

The equipment required to support this SAC are the grout height indicators and proper valve alignment. In the event the SDU 6 Maximum Grout Height SAV (which must be adjusted for grout height indicator uncertainty) is exceeded, the SDU Portable Ventilation System is available to minimize the potential for the SDU to become flammable. The SDU does not have automatic level indication and associated interlocks because of the slow fill rate and the required visual observations of the grout height indicators, which provide clear evidence of the grout height. There is sufficient time for operator action to shut down the process as required to prevent flammable conditions in the vapor space.

4.5.7.3 Functional Requirements

The SDU 6 Maximum Grout Height SAV is the maximum average grout height in SDU 6 and shall remain less than or equal to 21.7 feet (which must be adjusted for grout height indicator uncertainty).

The grout height indicators, according to facility conditions, are required to perform the safety function of this SAC. Direct measurement of the grout height is indicative of the vapor space volume above the grout.

In the event the SDU 6 Maximum Grout Height SAV (which must be adjusted for grout height indicator uncertainty) is exceeded, the following equipment, according to facility conditions may be used to minimize the potential for the vapor space to become flammable:

- SDU Portable Ventilation System
- Portable Flammability Monitors

The average grout level in SDU 6 shall remain less than or equal to the SDU 6 Maximum Grout Height SAV (which must be adjusted for grout height indicator uncertainty) and shall be ensured as follows:

- Average grout height, grout height indicator level at the grout pour port location, and adequate available fill space shall be verified prior to initiating a pour into SDU 6 when above the cautionary grout height of 15.5 feet at the grout pour location. Average grout height and grout height indicator level at the grout pour port location shall be determined at a frequency based on operational experience and engineering judgment while pouring and following completion of the grout pour. Instrumentation used for determining grout processing rate shall meet IPI or M&TE requirements as described in Section 5.5.2.8.
- Grout shall be verified to be entering the intended grout pour port upon initiation of pouring into the SDU.
- If grout height is indicated to be greater than the SDU 6 Maximum Grout Height SAV (which must be adjusted for grout height indicator uncertainty) at the grout pour port location during grout pouring then:
    - Stop introduction of salt solution and dry premix feed to the SDU.
    - Grout pouring to a grout pour port with an assigned grout height indicator that exceeds the SDU 6 Maximum Grout Height SAV (which must be adjusted for grout height indicator uncertainty) is prohibited.
    - Verify average grout height is less than or equal to the SDU 6 Maximum Grout Height SAV (which must be adjusted for grout height indicator uncertainty) at the grout height measured locations. Average grout height shall be determined using the grout height indicators to the respective pour port locations. Grout pouring may resume at alternate grout pour port locations following completion of the average height verification, provided the calculated average grout height is less than the

SDU 6 Maximum Grout Height SAV (which must be adjusted for grout height indicator uncertainty).

- If average grout height is determined to be greater than the SDU 6 Maximum Grout Height SAV (which must be adjusted for grout height indicator uncertainty) during or following grout pouring, the facility is outside of compliance with this SAC.
  - The facility shall monitor the SDU vapor space and ventilate as required to maintain vapor space less than or equal to 25% CLFL. These actions shall be performed until such time that it can be verified by Engineering Evaluation that the SDU vapor space will be maintained less than or equal to 60% CLFL by passive breathing alone. 60% CLFL provides adequate margin to the CLFL. Flammability monitoring instrumentation shall meet IPI or M&TE requirements as described in Section 5.5.2.8, or
  - The facility shall provide continuous ventilation until an Engineering Evaluation confirms that the SDU vapor space will be maintained less than or equal to 60% CLFL by passive breathing alone. 60% CLFL provides adequate margin to the CLFL. Flow instrumentation for ventilation measurement shall meet IPI or M&TE requirements as described in Section 5.5.2.8.

4.5.7.4 SAC Evaluation

A SAC was chosen to provide this control versus a SSC due to the lack of an existing SSC, the cost of adding equipment, and short life cycle of the SDU. In addition, a SAC was chosen due to the numerous pour locations and a varying monitoring frequency. This SAC was selected and is judged to be acceptable for the purpose of protecting the minimum required vapor space for the following reasons and conservatisms:

1. The rate of grout fill is slow. At the bounding rate of production of 180 gpm, the average fill rate is significantly less than 1 foot per 24-hour pour (180 gpm x 24 hr x 60 min/hr x 0.134 ft^3/gal < π x $(375\ ft/2)^2$ x 1 ft).
2. A pour location is considered at the fill height when the specified grout height indicator (for the specific pour location) indicates grout at the SDU 6 Maximum Grout Height SAV. This does not give a height directly under the pour location; therefore, the mound peak directly under the pour location may be higher than the fill height. Due to the grout sloping down and away from the pour location the height continues to decrease the further it is from the pour location. The specified grout height indicators are the closest indicators to the pour locations. Proportionally, the distance from the pour point to the assigned grout height indicator is much less than the distance from the grout height indicator to a point equidistant to other grout pour locations, creating a larger area surrounding the grout pour port that is significantly below the indicated level. It is conservative to assume that once the SDU 6 Maximum Grout Height SAV is reached at these assigned grout height indicators, the grout height at that grout pour location is SDU 6 Maximum Grout Height SAV even though points further from the pour location, and close to the wall, will be less than the SDU 6 Maximum Grout Height.

3. The minimum vapor space requirements are maintained with an average grout fill height at the SDU 6 Maximum Grout Height SAV. The safety analysis was completed assuming that the grout would be poured evenly across the SDU. It has been shown that when the grout is poured, it spreads and will mound under the pour location. Therefore, as the grout flows out away from the pour location, the height continues to decrease the further it is from the pour location. This will create peaks and valleys all across the SDU. Due to these peaks and valleys that will form while filling, using an average fill height of the SDU 6 Maximum Grout Height SAV is judged to protect the assumption in the flammability analysis.

4. Once a pour location reaches the cautionary grout height (at the grout height indicators), the grout height shall be determined periodically while pouring and following completion of a grout pour. The grout height increase per pour will vary from the first several pour locations to the last few pour locations. Specifically, the grout pour port location may be in a valley created by surrounding mounds, or the pour port location may be above an existing mound. As a result of this, it is conservative to begin monitoring at 15.5 feet.

5. Monitoring grout height periodically after reaching the cautionary grout height at a pour location protects the average fill height SDU 6 Maximum Grout Height SAV. Monitoring periodically for the last few feet of the pour provides sufficient margin to shut down a pour if the fill height is reached faster than anticipated, and protects the minimum required vapor space in the SDU.

6. A grout height measurement at a pour location may be taken using any of the specified grout height indicators (see Table 5.5.2.16-1 for a list of specified grout height indicators). Due to the consistency and self-leveling tendency of the grout, it is not expected that large height discrepancies between the grout height indicators will be seen at a pour location.

7. At the SDU 6 Maximum Grout Height SAV, the SDU 6 vapor space flammability is below the CLFL (Ref. 44). The SDU flammability analysis contains several conservative inputs and assumptions (described in detail in Section 3.3.2.3) that support the derived SAV for the SDU 6 Maximum Grout Height (which approaches the CLFL). The conservatisms utilized to derive the SDU 6 Maximum Grout Height SAV include:

   - The grout monolith is at the peak temperature.
   - The monolith is evaluated assuming the flammable constituents are at the maximum concentrations.
   - The SDU 6 flammability analysis evaluated a maximum salt solution throughput of approximately 10 million gallons annually, assuming 24-hour operation. Conservatively, continuous pouring of the feed stock (Tank 50 plus SSRT inventory) at a low rate (worst case; 65 gpm [Ref. 15]) was assumed and no vapor space mixing was assumed during these pours. Sustained, continuous pour operations assumed in Reference 44 may not be achievable due to dry feeds limitations and the lower output of the SWPF (as compared to the throughput of SPF). Pour durations assumed are not meant to restrict facility operations, but

rather to provide a reasonably bounding scenario to ensure safe operation of the Saltstone Facility.

- The flammability analysis assumes passive breathing does not occur on 24-hour pour days, and the breathing rate during 12-hour pour days is 0.25% of the vapor space volume per day.
- NORPAR™ 13, methanol, butanol, and isopropanol are released from grout completely upon pouring.
- The SDU vapor space is temperature inverted, i.e., has a grout temperature less than the roof temperature, on days when 24-hour pours are occurring. Thus, no convective flux from the surface of the grout is assumed, and the analysis considers the vapor space is not well mixed.

Permanent grout height indicators installed on twenty of the internal support columns provide a visual indication of the grout level in SDU 6. Grout height indicators are marked in 3-inch increments and are static, having no mechanical or electrical components, assuring grout height indicator functionality. For SDU 6, the top edge of the 3-inch marks is the indicated level. Once the 3-inch increment marking is completely covered (i.e., the marking is no longer visible), the grout height is then determined to be at the next higher increment. Thus, once the 21.25-foot increment is completely covered, the grout level would be determined to be at 21.5 feet. Grout can continue to be poured, as long as the 21.5-foot marking remains visible. The grout height indicators may be viewed by using a CCTV.

Normal operating procedures and system alignment checklists are considered adequate to ensure grout is being poured at the correct grout pour location. This is due to the limited range of operations performed in the facility and visual indications available for the process. A small leak at a 3-way valve, which is a ball valve, is unlikely due to the design of the valves and if it occurred, a small flow of grout would be expected to set and self-seal over time. 3-way ball valves are effective at providing flow in the desired flow path while minimizing leakage to the undesired flow path. An operator positions the grout transfer line 3-way valves to align the grout transfer line to the desired SDU and pour port location. In order to minimize human error associated with SDU and pour port location selection, the positioning of the valves is independently verified. Additionally, the use of a CCTV can provide visual indication of proper system alignment to ensure that grout is being poured in the proper pour port location. Due to the slow fill rate and the time needed to verify flow to the intended pour location, only a small quantity of grout would be inadvertently poured into the wrong location creating a minimal flammability concern.

The following assures functionality of equipment used for this SAC:

- SDU Portable Ventilation System – NMMP (Section 5.5.2.11)
- Ventilation flow instrumentation - M&TE (Section 5.5.2.8)
- Portable Flammability Monitors – M&TE (Section 5.5.2.8)

4.5.7.5 Controls (TSRs)

The SDU 6 Fill Height is a SAC presented as a directive action SAC in the TSRs. SAC 5.6.2.5 specifies the requirements for this control.

4.5.8 PROHIBITED OPERATIONS PROGRAM (SAC 5.6.2.7)

4.5.8.1 Safety Function

This SAC is credited as a bounding initial condition for inactive/operationally filled SDUs:

- Prevent the SDU cell vapor space from becoming flammable by prohibiting material transfers from all sources into inactive/operationally filled SDUs (i.e., SDUs 2, 4, and 5) including grout, salt solution, drainwater, inhibited water, and process water.

  Given that measured data indicates minimal flammable gas contribution to flammability in these SDUs, the flammability of these SDUs is not challenged when inactive/operationally filled (Ref. 15). In the absence of flammable constituents, other sources of water intrusion (e.g., rainwater) would be minor in nature and have an insignificant effect on the cell vapor space volume.

This SAC serves an SS function for prevention of flammability in the vapor space of an inactive/operationally filled SDU.

4.5.8.2 SAC Description

The Prohibited Operations Program provides an Initial Condition that protects the present inventory and vapor space volume of an SDU cell and forms the basis for the hazards analysis. No SSCs could be identified to prevent additional inventory from all sources entering inactive/operationally filled SDUs for all possible configurations. Flammability of the vapor space in an SDU cell has a direct correlation to the available vapor volume and the amount of flammable materials that enter the SDU cell.

The safety function is not adequately implemented as part of any Safety Management Program and, because of its importance, should be developed and protected in the TSR as a SAC. This program was designated a SAC because the controls performing this safety function cannot be accomplished with existing SSCs. The grout transfer line piping for the inactive/operationally filled SDU cells have been blanked for SDUs 2 and 5 and physically disconnected for SDU 4, preventing material from the SPF from entering the cells. Drainwater Return System piping could be blanked or physically disconnected, preventing drainwater from an active/operational SDU from entering inactive/operationally filled SDU cells. However, additions from external sources cannot be addressed via SSCs, as this would require the securing of all potential entry points into the SDU cells.

Assurance of the safety function of this SAC lies in the static nature of the application. The Prohibited Operations Program serves as a method to isolate the grout transfer line and drainwater return line from inactive/operationally filled SDUs (SDUs 2, 4 and 5). For protection

of the vapor space of the SDUs, no operator actions other than initial isolation would be required to prevent the explosion event as outlined in the Hazard Analysis (Ref. 4, 37).

Equipment relied upon to implement this SAC includes drainwater isolation valves, blanks/physical disconnections, and Drainwater Collection System level instrumentation, as the grout transfer line piping to the inactive/operationally filled SDUs are blanked or physically disconnected.

For inactive/operationally filled SDUs (SDUs 2, 4, and 5), it is prohibited to transfer either clean cap, radioactive grout, salt solution, inhibited water, or process water by either grout transfer line from the SPF or from an external source.

The following is a list of Saltstone Facility prohibited operations (unintended receipts) and constitutes a SAC violation:

a. Receipt of clean cap or radioactive grout by either grout transfer line from the SPF or by an external source to SDUs 2, 4, and 5.
b. Receipt of salt solution, inhibited water, or process water by grout transfer line from the SPF to SDUs 2, 4, and 5.
c. Receipt of drainwater by drainwater return line from another SDU to SDUs 2 and 5.

4.5.8.3 Functional Requirements

This SAC relies on the Conduct of Operations Program (Section 5.5.2.13) Manual 2S for equipment isolation by Administrative Lock using Independent Verification.

For SDU 4, the Leachate Collection and Return System is an independent system and cannot interact with active/operational SDUs. Isolation of the SDU 4 Leachate Collection System is not applicable.

For inactive/operationally filled SDUs, it is prohibited to transfer material from all sources into the SDU/SDU cell.

Functionality of the following equipment is relied upon to implement this SAC:

Drainwater isolation valves – If this SAC relies on this support equipment, the drainwater isolation valves shall be independently verified to be administratively locked in the closed position and double valve isolation shall be required. Drainwater Collection System level instrumentation is available to ensure any leakage through the drainwater isolation valves into an inactive/operationally filled SDU/SDU cell is detected.

Blanks/Physical Disconnections – In lieu of the drainwater isolation valves identified above, the Drainwater Return System may be blanked or physically disconnected to prevent additional drainwater from entering an inactive/operationally filled SDU/SDU cell from an active/operational SDU/SDU cell. Drainwater Collection System level instrumentation is not required.

Drainwater Collection System level instrumentation –The Drainwater Collection System level instrumentation shall meet IPI requirements as described in Section 5.5.2.8. The Drainwater Collection System level instrumentation IPI requirement is not required if the drainwater isolation valves are blanked or physically disconnected.

Operations activities such as valve manipulation, control of grout, salt solution, inhibited water, process water, and drainwater alignment, and monitoring of Drainwater Collection System level are considered to be routine tasks and are governed by existing programs, procedures, and training. This is due to the limited range of operations performed in the facility and visual indications available (when required) for the process. Additionally, there are no time-sensitive actions that are performed, as this is a static precondition to prevent the event.

4.5.8.4 SAC Evaluation

The grout transfer line piping for the inactive/operationally filled SDU cells have been blanked for SDUs 2 and 5 and physically disconnected for SDU 4, preventing material from the SPF from entering the cells.

SDU 4 has no requirement for the Leachate Collection and Return System as the Leachate Collection and Return System has no physical connection with operational SDUs.

To ensure backflow to the Drainwater Collection Systems does not occur from a misvalving or leakage of drainwater from operating SDUs, the Administrative Lock Program, to include Independent Verification of the position of the drainwater isolation valves (double valve isolation) shall be procedurally verified to be administratively locked in the closed position prior to drainwater transfers from an operating SDU. An allowance for an exception to this Administrative Lock is permissible for pumping drainwater from an inactive/operationally filled SDU, as the Drainwater Collection System of an inactive/operationally filled SDU may be subject to incremental increases in level from water intrusion (e.g., rainwater).

In lieu of the Administrative Lock/Independent Verification requirement, the drainwater return line piping may be blanked or physically disconnected to prevent additional material from entering an inactive/operationally filled SDU.

During drainwater transfers, liquid level in the Drainwater Collection System shall be monitored on a routine basis via procedure. For SDUs 2& 5, if required drainwater indication is lost during a transfer, the transfer is required to be terminated. This verification is not required if the Drainwater Collection System is blanked or physically disconnected.

The following assures functionality of equipment used for this SAC:

- Drainwater Collection System level instrumentation - IPI (Section 5.5.2.8) if the drainwater return line remains physically connected to the inactive/operationally filled SDU

4.5.8.5 Controls (TSRs)

The Prohibited Operations Program is a SAC in descriptive format and included in TSR Section 5.6.2.

4.6 REFERENCES

1. Nuclear Safety Management. Subpart B, Title 10 Code of Federal Regulations (CFR) 10 CFR 830, Safety Basis Requirements. U.S. Department of Energy, Washington DC, January 2001.

2. Preparation Guide for U.S. Department of Energy Nonreactor Nuclear Facility Documented Safety Analyses. DOE-STD-3009-94, Change Notice No. 3, U.S. Department of Energy, Washington DC, March 2006.

3. Deleted

4. Saltstone Facility Consolidated Hazard Analysis (U). WSRC-TR-2001-00574, Rev. 18.

5. Conduct of Engineering and Technical Support. Procedure Manual E7, Procedure 2.25.

6. Backfit Analysis Process. Procedure Manual E7, Procedure 3.41.

7. Natural Phenomena Hazards Analysis and Design Criteria for DOE Facilities. DOE-STD-1020-2012, U.S. Department of Energy, Washington DC, December 2012.

8. Saltstone Backfit Analysis Package Saltstone Disposal Units (SDUs) 2, 3, 4, & 5 Cell Passive Vents Safety Significant. G-BFA-Z-00001, Rev. 7.

9. Specific Administrative Controls. DOE-STD-1186-2004, U.S. Department of Energy, Washington DC, August 2004.

10. Gamma Source Strength, Inhalation Dose Potential, Heat Rate and Hydrogen Generation Rate for Saltstone Processing. N-CLC-Z-00023.

11. Deleted

12. Nuclear Criticality Safety Evaluation for Z-Area. N-NCS-Z-00001, Rev. 13.

13. Deleted

14. Deleted

15. "Saltstone Safety Analysis Input Deck". http://pceweb.srs.gov/inputdeck. Savannah River Remediation LLC, Aiken SC.

16. Deleted

17. Deleted

18. Deleted

19. Deleted

20. Deleted

21. Deleted

22. Deleted

23. Deleted

24. Deleted

25. Deleted

26. Deleted

27. Deleted

28. Deleted

29. Saltstone Facility SDU 2 and SDU 3/5 Flammability Analysis (U). S-CLC-Z-00080, Rev. 1.

30. Concentration, Storage and Transfer Facilities Documented Safety Analysis. WSRC-SA-2002-00007.

31. Deleted

32. Deleted

33. Deleted

34. Deleted

35. Deleted

36. Deleted

37. Consolidated Hazard Analysis for Saltstone Disposal Units 3 and 5 Project. S-CHA-Z-00004, Rev. 3.

38. Deleted

39. SRS Engineering Standards Manual. WSRC-TM-95-1.

40. Functional Classification Methodology Manual (U). WSRC-TM-93-9.

41. Limiting Thermal Response of Salt Solution Receipt Tanks (SSRT) (U). S-CLC-Z-00098, Rev. 3.

42. SSRT and SFT Explosion Accident Analysis (U). S-CLC-Z-00089, Rev. 3.

43. Conduct of Maintenance. Manual 1Y, Procedure 5.02, Preventive Maintenance Program.

44. Saltstone Facility SDU 6 Flammability Analysis (U). S-CLC-Z-00115, Rev. 2.

45. Saltstone SSRT Tank Flammability Analysis (U). S-CLC-Z-00073, Rev. 3.

46. Saltstone SFT Tank Flammability Analysis (U). S-CLC-Z-00055, Rev. 3.

4.7 TABLES

Table 4.4-1 Safety Significant Structures, Systems, and Components

Chapter 4 SS SSC	Chapter 3 Accident Reference	Safety Function	Functional Requirement	TSR Coverage
4.4.1 SDU Cell Passive Vents (excludes SDU 6 passive vents)	SDU Cell Explosion Event	Provide the primary path between the cell and the atmosphere. The SDU Cell Passive Vents aid in minimizing the potential for reaching CLFL conditions inside an SDU by allowing air displaced by the grout being poured to exit the cell and allowing passive breathing of the cell.	Provide a flow path between the SDU cell vapor space and atmosphere. If forced ventilation of the cell is required, air from outside the SDU is drawn in through the passive vents replacing the air being withdrawn from the cell vapor space by the SDU Portable Ventilation System.	Design Feature

Table 4.4-2 Design Criteria Assessment Matrix

4.4.1 SDU Cell Passive Vents (excludes SDU 6 passive vents)		
DESIGN REQUIREMENT	**REQUIREMENT MET**	**BASIS/REFERENCE**
1. NPH Resistance	N/A	Not credited in the DSA (Ref. 4, 8).
2. Equipment Environment Consideration	Yes	The SDU Cell Passive Vents are designed for outdoor use. Materials are typical of those used in radiological confinement ventilation systems (Ref. 8).
3. Functionality	Yes	The passive vent design and installation is judged to be acceptable. The SDU Cell Passive Vents are classified as SS and the filters as PS. All maintenance will be per SS QA requirements (Ref. 8).
4. Test Requirements	Yes	The SDU Cell Passive Vents are periodically inspected for any structural degradation or pluggage per the Structural Integrity Program requirements (Ref. 4, 8).
5. Maintenance Requirements	Yes	The passive design of the SDU Cell Passive Vents requires no routine maintenance other than filter replacements. The vents and filters are easily accessible but ALARA considerations will limit the amount of time available for maintenance (Ref. 8).

4.8 FIGURES

Figure 4.4-1 Deleted

SALTSTONE FACILITY

DOCUMENTED SAFETY ANALYSIS

CHAPTER 5

DERIVATION OF TECHNICAL SAFETY REQUIREMENTS

Revision 15

July 2018

TABLE OF CONTENTS

Page

5.0 DERIVATION OF TECHNICAL SAFETY REQUIREMENTS 5-1

5.1 INTRODUCTION 5-1

5.2 REQUIREMENTS 5-1

5.3 TECHNICAL SAFETY REQUIREMENT COVERAGE 5-1

5.4 Deleted 5-2

5.5 TSR DERIVATION 5-2

5.5.1 Deleted 5-2

5.5.2 Administrative Controls 5-2

5.5.2.1 Waste Acceptance Criteria Program (SAC 5.6.2.1) 5-2

5.5.2.2 Structural Integrity Program (AC 5.6.3.1) 5-3

5.5.2.3 Radiological Protection Program (AC 5.6.3.2) 5-3

5.5.2.4 Fire Protection Program (AC 5.6.3.3) 5-4

5.5.2.5 Quality Assurance Program (AC 5.6.3.4) 5-4

5.5.2.6 Environmental Compliance Program (AC 5.6.3.5) 5-4

5.5.2.7 Industrial Hygiene Program (AC 5.6.3.6) 5-4

5.5.2.8 Installed Process Instrumentation (IPI), Measuring and Test Equipment (M&TE), and Other TSR Measuring Devices (AC 5.6.3.7) 5-5

5.5.2.9 Deleted 5-5

5.5.2.10 Configuration Control Program (AC 5.6.3.8) 5-5

5.5.2.11 Nuclear Maintenance Management Program (NMMP) (AC 5.6.3.9) 5-5

5.5.2.12 Nuclear Criticality Safety Program (AC 5.6.3.10) 5-6

5.5.2.13 Conduct of Operations Program (AC 5.6.3.11) 5-6

5.5.2.14 Event Response Program (SAC 5.6.2.3) 5-6

TABLE OF CONTENTS (continued)

Page

5.5.2.15 Severe Weather Response Program (SAC 5.6.2.4) 5-6

5.5.2.16 SDU 6 Fill Height (SAC 5.6.2.5) 5-7

5.5.2.17 SDU 3 Cell Fill Height (SAC 5.6.2.6) 5-9

5.5.2.18 Prohibited Operations Program (SAC 5.6.2.7) 5-12

5.5.3 Deleted 5-12

5.5.4 Minimum Shift Crew 5-12

5.6 DESIGN FEATURES 5-13

5.7 INTERFACE WITH TSRs FROM OTHER FACILITIES 5-14

5.7.1 Saltstone Facility WAC Program (SAC) 5-14

5.7.2 CSTF Controls on Transfers to the Saltstone Facility (SAC) 5-14

5.7.2.1 Equipment Needed to Stop Transfers and Siphons (SAC) 5-15

5.7.2.2 Transfer Route Isolation (SAC) 5-16

5.7.2.3 Material Balance Discrepancies (SAC) 5-17

5.7.2.4 Transfer Termination and Isolation During/Following NPH Events (SAC) 5-18

5.8 REFERENCES 5-20

5.9 TABLES 5-22

TABLES

Page

5.5.1.3-1 Deleted 5-22

5.5.2.16-1 SDU 6 Grout Height Indicator Designation..... 5-22

5.0 DERIVATION OF TECHNICAL SAFETY REQUIREMENTS

5.1 INTRODUCTION

The purpose of this chapter in the DSA is to document the derivation of TSRs for the Saltstone Facility.

This chapter builds upon the controls identified in Chapter 3, Hazard and Accident Analyses and Chapter 4, Safety Structures, Systems, and Components. This chapter provides the basis to derive the TSR controls for specific control features, programs and DFs necessary to perform safety functions and identifies TSRs from other facilities that affect the Saltstone Facility's SB.

5.2 REQUIREMENTS

The content, format, and graded approach guidelines for identifying safety requirements in this chapter have been specifically developed in accordance with requirements of the following codes, standards and regulatory documents:

- Title 10 CFR Part 830, Nuclear Safety Management, Subpart B, TSRs (Ref. 1)
- DOE-STD-3009-94, Preparation Guide for U.S. Department of Energy Nonreactor Nuclear Facility Documented Safety Analyses (Ref. 2)
- DOE G 423.1-1A, Implementation Guide For Use In Developing Technical Safety Requirements (Ref. 3)
- DOE-STD-1186-2004, Specific Administrative Controls (Ref. 12)

5.3 TECHNICAL SAFETY REQUIREMENT COVERAGE

As defined in Title 10 of the CFR, Part 830, Safety Limits (SLs) are limits on process variables associated with those SC physical barriers, generally passive, that are necessary for the intended facility function and that are required to guard against the uncontrolled release of radioactive materials. The Safety Analysis did not determine any single limit that, if exceeded, could directly cause the failure of a barrier that prevents the release of radioactive or hazardous material. Therefore, no SLs are required.

As defined in Title 10 of the CFR, Part 830, Limiting Control Settings (LCSs) are associated with SLs, and shall be conservatively selected such that automatic or manual protective action will correct the abnormal situation before an SL is exceeded. No SLs have been identified for the Saltstone Facility; therefore, there are no LCSs.

Chapter 3 accident analysis identified no unmitigated events that exceed the risk criteria for radiological consequences to the CW and Public receptor or the chemical guidelines to the Public receptor. During the analysis of postulated events that could affect the Saltstone Facility, two event types that exceed the chemical guidelines to the CW receptor as outlined in Chapter 3 have been identified. These event types include a Seismic Event and a Tornado/High Wind Event. SS controls were identified to prevent or mitigate the consequences for these events. SS controls also were identified as initial conditions that protect bounding operational parameters that make

explosions in SDUs not credible. The requirements for these controls appear in the form of SACs, and ACs.

ACs appear in the form of SACs or Programmatic ACs. SACs and the Programmatic ACs are described in Section 5.5.2.

Some controls require verification of limits to meet requirements. For criteria not requiring sampling, analytical uncertainty is not applicable. As discussed in Chapter 4, if sample results are utilized in the comparison against limits, then an analytical uncertainty of 2 Sigma (2 σ) shall be included prior to the comparison. However, analytical uncertainty would not be applicable for concentrations reported at minimum detectable levels, as there is at least a 95% confidence that the result is below this value (e.g., Ref. 38, 39). Additionally, sampling to support calculation of HGR may use nominal values without uncertainty. For radiolytic HGR, this is based on conservative R values used in determining the rate (Ref. 40) and the calculation of $f_{organic}$ which does not account for all potential hydrogen radical scavengers. For thermolytic HGR, this is based on the reactivity coefficient for organic species being conservatively taken as 1, as well as the conservative derivation of the density and TOC and Al concentrations utilized, which are based on the combined highest value of each component. Therefore, sampling to support HGR does not need to include additional analytical uncertainty.

5.4 DELETED

5.5 TSR DERIVATION

5.5.1 DELETED

5.5.2 ADMINISTRATIVE CONTROLS

5.5.2.1 Waste Acceptance Criteria Program (SAC 5.6.2.1)

The Saltstone Facility WAC Program specifies the requirements that ensure that the composition of the waste stream received into the facility is within DSA analyzed limits. The WAC Program is a SAC and is evaluated in Section 4.5.1. Controls required to be implemented by interfacing facilities to ensure the implementation of the WAC are discussed in Section 5.7, Interface with TSRs from Other Facilities. The Saltstone WAC is applicable to waste transferred from Tank 50H to the Saltstone Facility through an inter-area transfer line that connects Tank 50H to the SSRTs or the SFT at the Saltstone Facility. This program ensures the assumptions used in calculating the chemical and radiological consequences, the flammability assumptions (volatile chemical concentrations, HGR, and salt solution temperature), and the criticality assumptions remain valid.

When sample results are utilized to demonstrate compliance with a limit/requirement, an analytical uncertainty of 2 Sigma (2 σ) shall be included prior to comparing to the limit/requirement (additional information and exceptions are described in Section 5.3). This is applicable to the following limits/requirements: inhalation dose potential, flammable vapor contributions, fissile material concentrations, and chemical concentrations.

5.5.2.2 Structural Integrity Program (AC 5.6.3.1)

The Structural Integrity Program shall assess the SS SSCs identified for the Saltstone Facility and determine/implement testing/inspection requirements as appropriate. This program shall provide reasonable assurance that the evidence of structural or functional degradation of the SSC is detected to permit corrective action before the function of the SSC is compromised. The program shall include, as a minimum, the following attributes:

- Evaluation of SS SSCs or other SSCs as identified by the Design Authority to determine its ability to perform its intended function under operational and credible design basis events.

- Identification of initial and periodic examinations during the life of the facility to identify if any degradation is occurring which may compromise the ability of the SSC to perform its safety function.

- Post design basis event evaluations of the SSC to determine, in the event of a design basis event, if the event has damaged the SSC to the extent that it can no longer perform its safety function.

The SS SSC of particular focus is the SDU Cell Passive Vents (see Section 5.6). The SDU 6 passive vents are not required to be functionally classified as SS, but are required to be included in this program. The Structural Integrity Program will ensure the function of the passive vents. The passive vents will be visually inspected to ensure they provide an open flow path between the SDU vapor space and atmosphere. Included in the inspection of the passive vents themselves, there will be an inspection of any filters, installed on the passive vents, for pluggage.

This program is designated as a Programmatic AC. The program provides a support function to aid in verifying and maintaining safety SSC integrity. This program provides a broad safety management function which is contained in organizational procedures and does not involve time critical operator actions. Therefore, this program does not warrant identification as a SAC.

5.5.2.3 Radiological Protection Program (AC 5.6.3.2)

Procedures for personnel radiological protection shall be prepared consistent with DOE requirements and shall be approved, maintained, and adhered to for all operations involving personnel radiation exposure. The Radiological Protection Program shall ensure that the radiation exposure of onsite individuals is maintained within applicable DOE limits and is ALARA. The program shall ensure that individual and collective radiation exposures are minimized.

This program is designated as a Programmatic AC. This program provides support to ensure ALARA. This program is part of a broad safety management program. Therefore, this program does not warrant identification as a SAC.

5.5.2.4 Fire Protection Program (AC 5.6.3.3)

A Fire Protection Program shall be established to minimize threats to the public health or welfare resulting from a fire and undue hazards to site personnel from a fire.

The Fire Protection Program shall address Fire Prevention, including control of combustibles and combustible loading within and around the facility, and fire control.

This program is designated as a Programmatic AC. This program provides support to ensure fire threats are minimized. The DSA does not credit a specific combustible loading for this program. This control is within the normal aspects of a broad safety management program and this program does not warrant identification as a SAC.

5.5.2.5 Quality Assurance Program (AC 5.6.3.4)

The Saltstone Facility QAP, through the site QAP, shall:

a. Require that sufficient records be maintained for activities affecting SS SSCs.

b. Support independent assessment, verification, and inspection requirements to ensure compliance with the QAP.

c. Provide for a graded approach to the application of QA requirements throughout the life of the facility.

This program is designated as a Programmatic AC. This program is part of a broad safety management program and does not warrant identification as a SAC.

5.5.2.6 Environmental Compliance Program (AC 5.6.3.5)

The site Environmental Compliance Program shall comply with federal and state environmental regulations. The Saltstone Facility shall follow site and facility procedures governing the applicable environmental regulations.

This program is designated as a Programmatic AC. This program is part of a broad safety management program and does not warrant identification as a SAC.

5.5.2.7 Industrial Hygiene Program (AC 5.6.3.6)

The Industrial Hygiene (IH) Program shall serve to maintain employee exposure to chemical and biological hazards within safe levels. The Saltstone Facility shall follow site and facility procedures governing the applicable IH regulations.

This program is designated as a Programmatic AC. This program is part of a broad safety management program. Therefore, this program does not warrant identification as a SAC.

5.5.2.8 Installed Process Instrumentation (IPI), Measuring and Test Equipment (M&TE), and Other TSR Measuring Devices (AC 5.6.3.7)

IPI, M&TE, and other TSR measuring devices shall be identified and programmatically controlled when used to monitor process variables (e.g., level, flow) to comply with the requirements of the TSR and assumptions in the safety analysis.

Controls shall include the following:

1. Traceability of TSR-related instruments
2. Calibration frequencies for TSR-related instruments which can be calibrated
3. Evaluation of TSR-related items found outside of calibration tolerances

Equipment used as measuring devices to comply with the requirements of the TSR that are not part of the IPI or M&TE programs shall have the required capability/accuracy for performance of the specified requirement. This equipment shall also be within applicable calibration and preventive maintenance frequencies.

This program is designated as a Programmatic AC. This program is part of a broad safety management program and does not warrant identification as a SAC.

5.5.2.9 Deleted

5.5.2.10 Configuration Control Program (AC 5.6.3.8)

Consistency and document coordination shall be implemented by the Configuration Control Program. As a minimum, the program will: identify and document the technical baseline of SSCs and computer software; ensure proper development, assessment, approval, issuance, and implementation to changes of the technical baseline; and maintain a system for recording, controlling, and indicating the status of technical baseline documentation on a current basis. This program also controls the configuration of the SSCs specified in the Design Features section of the TSR to maintain their design function.

This program is designated as a Programmatic Controls AC. This program is part of a broad safety management program and does not warrant identification as a SAC.

5.5.2.11 Nuclear Maintenance Management Program (NMMP) (AC 5.6.3.9)

A Nuclear Maintenance Management Program (NMMP) shall be established and implemented to ensure that effective measures are taken so that SSCs that are part of the Safety Basis are capable of performing their intended function.

This program is designated as a Programmatic AC. This program is part of a broad safety management program and does not warrant identification as a SAC.

5.5.2.12 Nuclear Criticality Safety Program (AC 5.6.3.10)

The Nuclear Criticality Safety Program shall ensure the following requirements are met (Ref. 35):

- NCSEs and/or Nuclear Criticality Safety Assessments (NCSAs) shall be the base documents for nuclear criticality control. Processes shall be shown to be subcritical under normal and credible abnormal operating conditions.
- NCSEs/NCSAs shall be used to evaluate new processes, or significant process changes that may adversely impact the characteristics of nuclear criticality safety.
- NCSEs/NCSAs shall document the calculations and judgments used in determining that nuclear criticality safety is ensured.

This program is designated as a Programmatic AC. This program provides support for evaluating criticality safety and identifying nuclear criticality safety barriers used as potential bounding conditions; however, this program does not warrant identification as a SAC.

5.5.2.13 Conduct of Operations Program (AC 5.6.3.11)

A Conduct of Operations Program shall be established to address the applicable topical areas from DOE requirements (see Section 11.3). The Facility shall follow site and Facility procedures for implementing Conduct of Operations.

This program is designated as a Programmatic AC. This program is part of a broad safety management program and does not warrant identification as a SAC.

5.5.2.14 Event Response Program (SAC 5.6.2.3)

The Event Response Program specifies requirements that ensure that following a Seismic Event, the SPF is placed in a configuration that will prevent an SSRT explosion. The Event Response Program is a SAC and is evaluated in Section 4.5.5. Actions shall be initiated to secure SSRT agitator(s) operation within 4 days following a Seismic Event.

5.5.2.15 Severe Weather Response Program (SAC 5.6.2.4)

The Severe Weather Response Program specifies requirements that ensure that the configuration of the SPF will minimize the potential release and prevent an SSRT explosion from occurring following a Tornado/High Wind Event. The Severe Weather Response Program is a SAC and is evaluated in Section 4.5.6. Upon receipt of a tornado warning or high wind warning by the SRSOC for the Saltstone Facility, the following actions shall be performed:

a. Secure transfers from the SSRT(s) and SFT.
b. Secure SSRT agitator(s) operation.

5.5.2.16 SDU 6 Fill Height (SAC 5.6.2.5)

The safety function of the SDU 6 Fill Height SAC is to ensure that the minimum vapor space is maintained in SDU 6 to protect the analysis assumption that a CLFL condition cannot be created in the SDU vapor space. The SDU 6 Fill Height is a SAC and is evaluated in Section 4.5.7. The following actions shall be used to ensure that a CLFL condition cannot be created in the SDU vapor space. The SDU 6 Maximum Grout Height SAV is established to maintain the SDU vapor space below CLFL without ventilation (other than passive diurnal breathing) during and following the pouring of radioactive grout and/or clean cap grout. The SDU 6 Maximum Grout Height SAV is 21.7 feet averaged across the grout surface. It does not account for the uncertainty associated with the readable accuracy of the grout height indicator(s) mounted on the SDU 6 columns. Therefore, the SDU 6 Maximum Grout Height SAV shall be further adjusted to account for this uncertainty. The SDU Grout Height Fill Limit for SDU 6 in the TSR includes uncertainty and is inclusive of any clean cap grout that may be required for ALARA considerations. The flammable constituents in the vapor space are a combination of organics, ammonia, and hydrogen.

- Average grout height, grout height indicator level at the grout pour port location, and adequate available fill space shall be verified prior to initiating a pour into SDU 6 when grout height is above the cautionary grout height of 15.5 feet at the grout pour port location (height has been adjusted for uncertainty). Average grout height and grout height indicator level at the grout pour port location shall be determined within a timeframe based on engineering judgment that provides reasonable assurance that any changes in grout height can be detected and responded to prior to initiation of grout pouring. The verification of grout height shall be performed by visual observation only (CCTV may be used). Grout height is determined by utilizing any one of the assigned grout height indicators at the grout pour port location (see Table 5.5.2.16-1 for assigned grout height indicators per pour location). Average grout height and grout height indicator level at the grout pour port location shall be determined periodically while pouring and following completion of the grout pour. Average grout height shall be determined by selecting one of the grout height indicators for each of the grout pour port locations (9 total, see Table 5.5.2.16-1), and computing the average grout height from the nine selected grout height indicators. The periodicity shall be sufficient to ensure that actions may be taken to minimize the potential for the vapor space to become flammable. The periodicity should consider the slow rate of fill of the SDU and allow for the final average grout height to be calculated, and recognize the delayed release of volatiles from the grout [peak CLFL is reached at greater than 400 days (Ref. 42)].
- Grout shall be verified to be entering the intended grout pour port upon initiating pouring into the SDU. This verification ensures grout is not being directed to an unintended location.
- If grout height is indicated to be greater than the SDU 6 Maximum Grout Height SAV (which must be adjusted for grout height indicator uncertainty) at the grout pour port location during grout pouring then:
    - Stop introduction of salt solution and dry premix feed to the SDU immediately. Immediately stopping addition of salt solution and dry premix feeds minimizes

the reduction in vapor space volume and the introduction of additional flammable gas contributors. Shutdown logic immediately stops the dry premix feed, but allows the residual dry premix feed in the mixer inlet chute to be processed. Additional flushing with IW or PW continues after stopping salt solution and dry premix feed to the mixer. The addition of this flush water to the SDU after stopping feeds to the mixer has an insignificant effect on the SDU vapor space and flammable gas concentration in the SDU vapor space.

- Grout pouring to the grout pour port with an assigned grout height indicator that exceeds the SDU 6 Maximum Grout Height SAV (which must be adjusted for grout height indicator uncertainty) is prohibited (see Table 5.5.2.16-1 for assigned grout height indicators).
- Verify average grout height is less than or equal to the SDU 6 Maximum Grout Height SAV (which must be adjusted for grout height indicator uncertainty). Average grout height shall be determined by selecting one of the grout height indicators for each of the grout pour port locations (9 total, see Table 5.5.2.16-1), and computing the average grout height from the nine selected grout height indicators.
- Grout pouring may resume at alternate grout pour locations following completion of the average height verification, provided the average grout height is less than the SDU 6 Maximum Grout Height SAV (which must be adjusted for grout height indicator uncertainty). Grout pouring at an alternate grout pour location is permissible because the SDU 6 vapor space flammability analysis assumes the grout is at the SDU 6 Maximum Grout Height SAV across the SDU (Ref. 42).

- If the average grout height is determined to be greater than the SDU 6 Maximum Grout Height SAV (which must be adjusted for grout height indicator uncertainty) during or following grout pouring, the facility is outside of compliance with this SAC.
  - The facility shall periodically monitor the SDU vapor space and ventilate as required to reduce/maintain vapor space to less than or equal to 25% CLFL. These actions shall be performed until such time that it can be verified by Engineering Evaluation that the SDU vapor space will be maintained less than or equal to 60% CLFL by passive breathing alone. The periodicity shall be sufficient to ensure that action may be taken and allows for corrective actions for adverse trends. The periodicity should consider the slow rate of fill of the SDU and allow for the final grout height to be calculated if visual observation is not available, and recognize the delayed release of volatiles from the grout [peak CLFL is reached at greater than 400 days (Ref. 42)]. The SDU Portable Ventilation System operates with an established ventilation efficiency value of 0.2. Verification of adequate flow (a minimum flow rate as defined by Ref. 43) is performed using local flow indications at the start, periodically during operation, and finish of run time. However, this is to maintain 25% CLFL under NFPA rated conditions. Nominal flow rates for the SDU Portable Ventilation System are typically four (4) to five (5) times that specified in Reference 43. Because of this conservatism and others in the calculation, an allowance for only instrument accuracy is required, provided nominal flow rates are used and the flow instrumentation for ventilation measurement meets IPI or M&TE requirements as

described in Section 5.5.2.8. Flammability monitoring instrumentation shall meet the requirements of the IPI or M&TE as described in Section 5.5.2.8. Visual verification of flex ducting connections and general integrity of the flex ducting prior to and periodically during operation provides assurance that air in leakage to the flex ducting will not invalidate the minimum flow assumed when performing the required ventilation. The Engineering Evaluation may use vapor space sampling or the methodology identified in the SDU flammability calculation (Ref. 42) using confirmed process values such as actual flammable constituent concentrations based on sampling history, past cell grout temperatures with appropriate uncertainties applied, hydrogen generation rates based on sampling, past pour schedule, past pour flow rate, salt solution mass fraction, etc., or

- Provide continuous ventilation as required until an Engineering Evaluation confirms that the SDU vapor space will be maintained less than or equal to 60% CLFL by passive breathing alone. Intermittent ventilation shutdowns due to equipment failures, refueling generators, etc. are brief and have a minimal impact on the flammability of the vapor space. Computations shall be verified per Procedure Manual E7 (Ref. 46) and include appropriate conservatism to prevent inadequate ventilation. Verification of adequate flow (a minimum flow rate as defined by Ref. 43) is performed using local flow indications at the start, periodically during operation, and finish of run time. The nominal flow rate given in Reference 43 is to maintain 25% CLFL under NFPA rated conditions. Nominal flow rates for the SDU Portable Ventilation System are significantly higher than the rate specified in Reference 43. Because of this conservatism and others in the calculation, an allowance for only instrument accuracy is required, provided nominal flow rates are used and the flow instrumentation for ventilation measurement meets IPI or M&TE requirements as described in Section 5.5.2.8. Flammability monitoring instrumentation shall meet the requirements of the IPI or M&TE as described in Section 5.5.2.8. Visual verification of flex ducting connections and general integrity of the flex ducting prior to and periodically during operation provides assurance that air in leakage to the flex ducting will not invalidate the minimum flow assumed when performing the required ventilation. The Engineering Evaluation may use vapor space sampling or the methodology identified in the SDU flammability calculation (Ref. 42) using confirmed process values such as actual flammable constituent concentrations based on sampling history, past cell grout temperatures with appropriate uncertainties applied, hydrogen generation rates based on sampling, past pour schedule, past pour flow rate, salt solution mass fraction, etc.

5.5.2.17 <u>SDU 3 Cell Fill Height (SAC 5.6.2.6)</u>

The safety function of the SDU 3 Cell Fill Height SAC is to ensure that the minimum vapor space is maintained in SDU 3 Cells A and B to protect the analysis assumption that a CLFL condition cannot be created in the SDU vapor space. The SDU 3 Cell Fill Height is a SAC and is evaluated in Section 4.5.2. The following actions shall be used to ensure that a CLFL condition cannot be created in the SDU vapor space. The SDU 3 Maximum Grout Height SAV is established to maintain the SDU cell vapor space below CLFL without ventilation (other than

passive diurnal breathing) during and following the pouring of radioactive grout and/or clean cap grout. The SDU 3 Maximum Grout Height SAV is 7.0 feet as evaluated at the wall and includes mounding of the grout in the center of the cell as described in Reference 34. It does not account for the uncertainty associated with the readable accuracy of the grout height indicator(s) mounted on the cell columns (Ref. 45). Therefore, the SDU 3 Maximum Grout Height SAV shall be further adjusted to account for this uncertainty. The SDU Cell Grout Height Fill Limit for SDU 3 in the TSR includes uncertainty and is inclusive of any clean cap grout that may be required for ALARA considerations. The flammable constituents in the vapor space are a combination of organics, ammonia, and hydrogen. The SDU 3 Maximum Grout Height SAV ensures that the flammable constituents of the cell vapor space are below the CLFL.

The SDU 3 Maximum Grout Height SAV is derived from the SDU cell flammability analysis (Ref. 34).

- Grout height and adequate available fill space shall be verified prior to initiating a pour into an SDU 3 cell when grout height is above the cautionary grout height of 5.75 feet (height has been adjusted for uncertainty) (Ref. 45). SDU 2 uncertainty (Ref. 45) is applicable to SDU 3 cells because of similar construction and features. Grout height shall be determined within a timeframe based on engineering judgment that provides reasonable assurance that any changes in grout height can be detected and responded to prior to initiation of grout pouring. The verification of grout height shall be performed by visual observation only (CCTV may be used) prior to the pour. Grout height is determined by utilizing any one of the three grout height indicators. Grout height shall be determined periodically while pouring and following completion of the grout pour. These other verifications of cell fill height shall be verified to be within the limits by selecting any one of the three grout height indicators or by calculating the grout fill height using the known run time since the last visual observation of fill height and the bounding grout pump flow rate or the actual processing rates, if available. Flow rate instrumentation shall meet IPI or M&TE requirements (Section 5.5.2.8) if actual processing rates are used. The periodicity shall be sufficient to ensure that actions may be taken to minimize the potential for the vapor space to become flammable. The periodicity should consider the slow rate of fill of the SDU and recognize the delayed release of volatiles from the grout [peak CLFL is reached at approximately 180 days following the final pour (Ref. 34)].
- If grout height is indicated to be greater than the SDU 3 Maximum Grout Height SAV (which must be adjusted for grout height indicator uncertainty) on one of the grout height indicators during or following grout pouring, the facility is outside of compliance with this SAC.
    - Stop introduction of salt solution and dry premix feed to the SDU cell immediately. Immediately stopping addition of salt solution and dry premix feeds minimizes the reduction in vapor space volume and the introduction of additional flammable gas contributors. Shutdown logic immediately stops the dry premix feed, but allows the residual dry premix feed in the mixer inlet chute to be processed. Additional flushing with IW or PW continues after stopping salt solution and dry premix feed to the mixer. The addition of this flush water to the

SDU cell after stopping feeds to the mixer has an insignificant effect on the SDU cell vapor space and flammable gas concentration in the SDU cell vapor space.

- The facility shall periodically monitor the SDU cell vapor space and ventilate as required to reduce/maintain vapor space to less than or equal to 25% CLFL. These actions shall be performed until such time that it can be verified by Engineering Evaluation that the SDU vapor space will be maintained less than or equal to 60% CLFL by passive breathing alone. The periodicity shall be sufficient to ensure that action may be taken and allows for corrective actions for adverse trends. The periodicity should consider the slow rate of fill of the SDU cell and allow for the final grout height to be calculated if visual observation is not available, and recognize the delayed release of volatiles from the grout [peak CLFL is reached in approximately 180 days after the final pour (Ref. 34)]. The SDU Portable Ventilation System operates with an established ventilation efficiency value of 0.2. Verification of adequate flow is performed using local flow indications at the start, periodically during operation, and finish of run time. Minimum flow rate for SDU 6 may be used (Ref. 43), as comparatively, flammable gases generated on a per volume basis in SDU 6, dwarfs that of an SDU 3 cell. However, this is to maintain 25% CLFL under NFPA rated conditions. Nominal flow rates for the SDU Portable Ventilation System are typically four (4) to five (5) times that specified in Reference 43. Because of this conservatism, comparison of scale between SDU 6 and SDU 3, and others in the calculation, an allowance for only instrument accuracy is required, provided nominal flow rates are used and the flow instrumentation for ventilation measurement meets IPI or M&TE requirements as described in Section 5.5.2.8. Flammability monitoring instrumentation shall meet the requirements of the IPI or M&TE as described in Section 5.5.2.8. Visual verification of flex ducting connections and general integrity of the flex ducting prior to and periodically during operation provides assurance that air in leakage to the flex ducting will not invalidate the minimum flow assumed when performing the required ventilation. The Engineering Evaluation may use vapor space sampling or the methodology identified in the SDU flammability calculation (Ref. 34) using confirmed process values such as actual flammable constituent concentrations based on sampling history, past cell grout temperatures with appropriate uncertainties applied, hydrogen generation rates based on sampling, past pour schedule, past pour flow rate, salt solution mass fraction, etc., or

- Provide continuous ventilation as required until an Engineering Evaluation confirms that the SDU vapor space will be maintained less than or equal to 60% CLFL by passive breathing alone. Intermittent ventilation shutdowns due to equipment failures, refueling generators, etc. are brief and have a minimal impact on the flammability of the vapor space. Computations shall be verified per Procedure Manual E7 (Ref. 46) and include appropriate conservatism to prevent inadequate ventilation. Verification of adequate flow is performed using local flow indications at the start, periodically during operation, and finish of run time. Minimum flow rate for SDU 6 may be used (Ref. 43), as comparatively, flammable gases generated on a per volume basis in SDU 6, dwarfs that of an

SDU 3 cell. The nominal flow rate given in Reference 43 is to maintain 25% CLFL under NFPA rated conditions. Nominal flow rates for the SDU Portable Ventilation System are significantly higher than the rate specified in Reference 43. Because of this conservatism and others in the calculation, an allowance for only instrument accuracy is required, provided nominal flow rates are used and the flow instrumentation for ventilation measurement meets IPI or M&TE requirements as described in Section 5.5.2.8. Flammability monitoring instrumentation shall meet the requirements of the IPI or M&TE as described in Section 5.5.2.8. Visual verification of flex ducting connections and general integrity of the flex ducting prior to and periodically during operation provides assurance that air in leakage to the flex ducting will not invalidate the minimum flow assumed when performing the required ventilation. The Engineering Evaluation may use vapor space sampling or the methodology identified in the SDU flammability calculation (Ref. 34) using confirmed process values such as actual flammable constituent concentrations based on sampling history, past cell grout temperatures with appropriate uncertainties applied, hydrogen generation rates based on sampling, past pour schedule, past pour flow rate, salt solution mass fraction, etc.

5.5.2.18 Prohibited Operations Program (SAC 5.6.2.7)

Controls shall be implemented to ensure the following operations are not permitted:

a. Receipt of clean cap or radioactive grout by either grout transfer line from the SPF or by an external source to SDUs 2, 4, and 5.
b. Receipt of salt solution, inhibited water, or process water by grout transfer line from the SPF to SDUs 2, 4, and 5.
c. Receipt of drainwater by drainwater return line from another SDU to SDUs 2 and 5.

5.5.3 DELETED

5.5.4 MINIMUM SHIFT CREW

There are minimum shift crew requirements for receiving salt solution from Tank 50H, during SSRT and SFT transfers, during SSRT agitator(s) operation, and for pouring grout.

During grout pouring operations, one qualified Shift Manager, one qualified Control Room Operator (CRO), and one qualified Balance of Plant (BOP) operator are required. The minimum shift crew is based on having senior oversight of facility operations and qualified operators to perform safety-related actions associated with flammability controls. These actions include shutting down grout pouring operations to an SDU, ventilating/monitoring the SDU without delay, and performing surveillances and SAC requirements. The action to shut down pouring may be performed by DCS or locally.

One qualified Shift Manager, one qualified CRO, and one qualified BOP operator are required during SSRT transfer to the Building 210-Z process room, SFT transfer to the Building 210-Z process room, or SSRT agitator(s) operation. The minimum shift crew is based on having senior

oversight of facility operations and qualified operators to perform safety-related actions. These actions include shutting down transfers from an SSRT(s) and SFT without delay, and securing SSRT agitator(s) operation. The action to secure transfers from the SSRT(s) and SFT, and SSRT agitator(s) operation may be performed by DCS or locally.

One qualified Shift Manager and one qualified CRO are required during inter-area transfers from Tank 50H to Saltstone. The minimum shift crew is based on having senior oversight of facility operations and a qualified operator to perform safety-related actions. These actions include shutting down inter-area transfers. This minimum shift crew is required to ensure the maximum spill volume assumed is not exceeded.

During periods when Saltstone Facility is not operating, the SPF may be destaffed. For destaffing purposes, not operating is defined as: 1) inter-area transfers from Tank 50H to Saltstone are secured, 2) SSRT transfer to the Building 210-Z process room is secured, 3) SFT transfer to the Building 210-Z process room is secured, and 4) SSRT agitator(s) is secured. During this period, one operator is required for daily rounds on SSRT equipment/alarm status to ensure SSRT agitator(s) operation is secured. This may be accomplished by a Saltstone Facility operator when staffed or a DWPF operator qualified to ensure SSRT agitator(s) operation is secured.

Facility processes shall be performed by qualified operators according to written procedures. The minimum facility shift crew composition may be one less than specified for a period up to 2 Hours due to unexpected absences. Shift crew composition is not permitted to be less than minimum due to shift turnover. In the event the minimum shift crew composition cannot be met while pouring grout, then pouring grout shall be shut down immediately. In the event the minimum shift crew composition cannot be met while receiving salt solution, then receipt of salt solution shall be secured immediately. A current list of facility support personnel shall be available to the Shift Manager. This list should include management, radiation safety, and technical support (Ref. 32).

Administrative procedures shall be implemented to limit the working hours of personnel that perform TSR functions. Adequate shift coverage shall be maintained without routine heavy use of overtime. The facility shall follow site and facility procedures governing overtime.

5.6 DESIGN FEATURES

SDU 4 Cell Passive Vents for Cells B, D, E, F, H, J, K, and L, and SDU 2/3/5 Cell Passive Vents for Cells A and B are designated as passive DFs which provide an SS function based on providing a flow path between the SDU cell vapor space and atmosphere. The vents aid in minimizing the potential for reaching CLFL conditions inside an SDU by allowing air displaced by the grout being poured to exit the cell and allowing passive breathing of the cell. The passive vents also provide the primary path for the air that is used to purge the cell vapor space. Two vents are available and will be maintained on top of each SDU 4 Cells (B, D, E, F, H, J, K, and L) and three vents will be maintained on top of SDUs 2, 3, and 5 cells. The SDU 2, SDU 3, SDU 4, and SDU 5 Cell Passive Vent's capability to perform its safety function will be assessed by the Structural Integrity Program.

5.7 INTERFACE WITH TSRs FROM OTHER FACILITIES

The Saltstone Facility receives waste streams from CSTF Tank 50H. In order to provide assurance that the Saltstone Facility inventory input and MAR assumptions remain valid and that waste received by the Saltstone Facility does not result in unacceptable exposure to offsite and onsite personnel, CSTF shall comply with the following requirements.

5.7.1 SALTSTONE FACILITY WAC (SAC)

CSTF shall maintain a Waste Compliance Plan (WCP) to demonstrate compliance with the Saltstone Facility WAC Program. In addition, further additions of TPB to Tank 50H shall be prohibited.

The WCP will specify the actions and technical evaluations that ensure that the functional requirements of the Saltstone Facility WAC Program are met. The WAC specifies requirements for flammable constituent concentrations, HGR, and salt solution receipt temperature, among others (see Section 3.3.2.3). Tank 50H temperature instrumentation/monitoring and periodic sampling (accounting for analytical uncertainty as described in Section 5.5.2.1) of waste receipt tanks gives additional assurance that the safety function is met (Ref. 19).

5.7.2 CSTF CONTROLS ON TRANSFERS TO THE SALTSTONE FACILITY (SAC)

In addition to meeting the Saltstone Facility WAC Program requirements for the Saltstone Facility, the following CSTF TSR controls shall be implemented for transfers to the Saltstone Facility to preclude potential accident scenarios for the Saltstone Facility. These requirements are not part of the SAC unless specifically noted.

- Monitoring and material balance requirements to detect transfer events shall be determined. The frequency and method (e.g., level/leak monitoring) of monitoring and material balances for a transfer and the required monitoring locations (including those past the first isolation point) shall be determined on an individual basis.
- Siphon evaluations shall be performed. This evaluation will identify the potential for siphons and identify methods and equipment needed to stop siphons.
- Prior to transfer initiation, independent verification of correct transfer path alignment shall be completed. After initiating the transfer, use of correct motive force shall be independently verified.
- Prior to transfer initiation, procedures shall identify (including staging requirements) the functional equipment needed to stop transfers and siphons. This requirement is a SAC.

  Stopping an unintended siphon shall be completed as soon as practical based on plant conditions through the use of appropriate transfer procedure (typically accomplished by closing appropriate waste transfer valves). Once the siphon has been stopped, the need for a rapid response is no longer required and breaking the siphon is not time dependent.
- Isolate the transfer route when transfers to the Saltstone Facility are terminated. This requirement is a SAC.

- Material balance discrepancies shall be less than or equal to 15,000 gallons. If material balance discrepancies are greater than 15,000 gallons, then the affected transfers shall be terminated immediately. This requirement is a SAC.

  Re-zeroing of material balances may be completed prior to reaching the applicable transfer procedure shutdown criteria and shall include a documented technical basis. The primary means of re-zeroing shall be accomplished by verifying no indications of a leak in the leak detection equipment. Video inspection of the interior of the sending and receipt tanks for the presence of salt mounds may be utilized and if salt mounds exist, the material balance may be re-zeroed.

- Procedures shall specify communication protocol during transfers.
- Ensure during a tornado watch/tornado warning/high wind warning, following a Tornado/High Wind Event, or following an earthquake, transfers are terminated and a siphon break established. This requirement is a SAC.

The above SACs shall be identified in the CSTF DSA (Ref. 19). CSTF equipment relied upon to implement these SACs, dependent upon the particular control, is described in the CSTF DSA (Ref. 19).

The Saltstone Facility derivation of each SAC is described in the following sub-sections.

5.7.2.1 Equipment Needed to Stop Transfers and Siphons (SAC)

5.7.2.1.1 Safety Function

The safety function of this SAC is to ensure that CSTF procedures identify the functional equipment needed to stop transfers and siphons in order to protect hazard and accident analyses MAR assumptions related to the maximum volume of waste in the Saltstone Facility.

5.7.2.1.2 SAC Description

The Saltstone Facility SB assumes that a maximum volume of 15,000 gallons of salt solution is releasable from CSTF transfer events, which is a conservative amount. Procedures identified by CSTF that control the transfer operation to the Saltstone Facility must identify the functional equipment needed to stop transfers and siphons in order to protect hazard and accident analyses volume of waste assumptions.

Salt solution transfers are controlled in the CSTF. The Saltstone Facility receives the waste transfer, while the CSTF leads the procedural activities to conduct the transfer. Since a siphon from Tank 50H to the Saltstone Facility cannot always be stopped from the Saltstone Facility, CSTF procedures shall identify the functional equipment needed to ensure that transfers and siphons can be stopped so that assumed salt solution volumes at the Saltstone Facility are not exceeded. These procedural controls for the transfer ensure that transfers and siphons can be stopped protecting the Saltstone Facility hazard and accident analyses assumptions.

5.7.2.1.3 Functional Requirements

Prior to transfer initiation from Tank 50H to the Saltstone Facility, procedures shall identify the functional equipment needed to stop transfers and siphons.

5.7.2.1.4 SAC Evaluation

To protect the hazard and accident analyses assumption related to the total volume of salt solution in the Saltstone Facility from CSTF transfer events, a SAC shall be developed by CSTF Operations and enforced within the CSTF DSA/TSR to ensure that procedures identify the functional equipment needed to stop transfers and siphons. CSTF procedures that identify the functional equipment needed to ensure that transfers and siphons can be stopped so that assumed salt solution volumes at the Saltstone Facility are not exceeded protects hazard and accident analyses assumptions. CSTF equipment used to stop transfers and siphons and its reliability to the Saltstone Facility is evaluated in Reference 19.

5.7.2.2 Transfer Route Isolation (SAC)

5.7.2.2.1 Safety Function

The safety function of this SAC is to ensure that the transfer route is isolated when transfers to the Saltstone Facility are terminated to protect hazard and accident analyses MAR assumptions related to the maximum volume of waste in the Saltstone Facility.

5.7.2.2.2 SAC Description

Waste in the form of salt solution is only transferred to the Saltstone Facility from Tank 50H using an inter-area transfer route. Transfers from Tank 50H are directed to the Saltstone Facility via a pre-identified transfer route which uses inter-area piping and a valve box located between Tank 50H and the Saltstone Facility. Salt solution transfer equipment located in the CSTF required to isolate the transfer route to the Saltstone Facility shall be verified closed in order to ensure the prevention of unintended transfers to the Saltstone Facility. Transfers within other CSTF areas also use specified transfer routes that when in use, may be common to the same transfer route piping located within the same valve box as used for transfers to the Saltstone Facility. The isolation of the transfer route to the Saltstone Facility is required to protect hazard and accident analyses assumptions related to the Saltstone Facility.

5.7.2.2.3 Functional Requirement

Isolate the transfer route when transfers to Saltstone Facility are terminated.

5.7.2.2.4 SAC Evaluation

To protect the hazard and accident analyses assumption related to the total volume of salt solution in the Saltstone Facility from CSTF transfer events, a SAC shall be developed by CSTF Operations and enforced in the CSTF DSA/TSR to ensure that the isolation of the transfer route to the Saltstone Facility is maintained when not in use in order to ensure the prevention of unintended transfers to the Saltstone Facility. An independent verification process to ensure

isolation of the transfer line is required. CSTF procedures that identify the equipment required to be isolated upon transfer termination with an independent verification function ensures that the transfer line to the Saltstone Facility is appropriately isolated. These actions by CSTF are considered reliable because they are routine tasks using approved procedures as described in Reference 19. Independent verification is considered adequate to ensure that the transfer line is isolated to the Saltstone Facility.

5.7.2.3 Material Balance Discrepancies (SAC)

5.7.2.3.1 Safety Function

The safety function of this SAC is to ensure that transfers to the Saltstone Facility are terminated before exceeding the material balance discrepancy limit of 15,000 gallons. Terminating the transfer ensures that the hazard and accident analyses assumptions related to the maximum volume of transferred and/or missing waste is less than or equal to 15,000 gallons.

5.7.2.3.2 SAC Description

Material balance discrepancies related to transfers to the Saltstone Facility shall be less than or equal to 15,000 gallons. If material balance discrepancies are greater than 15,000 gallons, then the affected transfers shall be terminated immediately. A total volume of 15,000 gallons of salt solution is assumed from the CSTF transfer events as the bounding volume of waste analyzed in the development of the hazard and accident analyses related to the Saltstone Facility SB. The Saltstone Facility inter-area transfer line flow indications and the SSRT/SFT level indicators are used to perform the material balance determination for waste transfers from CSTF.

5.7.2.3.3 Functional Requirement

Material balance discrepancies shall be less than or equal to 15,000 gallons. If material balance discrepancies are greater than 15,000 gallons, then the affected transfers shall be terminated immediately.

5.7.2.3.4 SAC Evaluation

To protect the hazard and accident analyses assumption related to the total volume of salt solution in the Saltstone Facility from CSTF transfers, a SAC shall be developed by CSTF Operations and enforced in the CSTF DSA/TSR to ensure that material balance discrepancies related to transfers to the Saltstone Facility shall be less than or equal to 15,000 gallons and if material balance discrepancies are greater than 15,000 gallons, then the affected transfer shall be terminated immediately. The actions required by this SAC are considered to be routine tasks governed by approved procedures. The Saltstone Facility inter-area transfer line flow indicators and the SSRT/SFT level indicators are required to support this SAC. In the event the in-line flow meter monitoring the incoming transfer becomes non-functional, material balance calculations for the salt solution received can be performed using an approved Saltstone Facility procedure to allow for continuation of salt solution transfers. Functionality of this equipment is supported by the NMMP in accordance with Manual 1Y as described in Chapter 10. CSTF equipment relied upon to implement this SAC is described in the CSTF DSA (Ref. 19).

The following assures functionality of equipment used for this SAC:

- Saltstone Facility inter-area transfer line flow indicators – IPI (Section 5.5.2.8)
- SSRT/SFT level indicators – IPI (Section 5.5.2.8)

5.7.2.4 Transfer Termination and Isolation During/Following NPH Events (SAC)

5.7.2.4.1 Safety Function

The safety function of this SAC is to ensure that, during a tornado watch/tornado warning/high wind warning, following a Tornado/High Wind Event, or following an earthquake, CSTF procedures provide for termination of the transfer, and establishing a siphon break, in order to protect hazard and accident analyses MAR assumptions related to the maximum volume of waste in the Saltstone Facility.

5.7.2.4.2 SAC Description

The Saltstone Facility SB assumes that a maximum volume of 15,000 gallons of salt solution is releasable from CSTF transfer events, which is a conservative amount. Procedures identified by CSTF that control the transfer operation to the Saltstone Facility during NPH events must stop transfers and siphons in order to protect hazard and accident analyses volume of waste assumptions.

Salt solution transfers are controlled in the CSTF. The Saltstone Facility receives the waste transfer, while the CSTF leads the procedural activities to conduct the transfer. These procedural controls for the transfer ensure that transfers are terminated and siphons breaks established to protect the Saltstone Facility hazard and accident analyses assumptions.

5.7.2.4.3 Functional Requirements

During a tornado watch/tornado warning/high wind warning, following a Tornado/High Wind Event, or following an earthquake, transfers are terminated and a siphon break established.

5.7.2.4.4 SAC Evaluation

To protect the hazard and accident analyses assumption related to the total volume of salt solution in the Saltstone Facility from CSTF transfer events, a SAC shall be developed by CSTF Operations and enforced within the CSTF DSA/TSR to ensure that procedures prescribe the methods necessary to ensure transfers are terminated and a siphon break established during or following NPH events. CSTF equipment used to stop transfers and siphons and its reliability to the Saltstone Facility is evaluated in Reference 19. Second person verification shall be performed for transfer termination and establishment of the siphon break. This verification is considered adequate to ensure the transfer/siphon is terminated.

The above indicated controls were designated as SACs in order to protect bounding initial conditions, which cannot be performed by an SSC.

Adequate conservatism exists for controls within these SACs based on the use of 15,000 gallons for maximum MAR for Saltstone Facility transfer events initiated from the CSTF and the physical configuration of the Saltstone Facility. Fifteen thousand gallons is the maximum MAR for salt solution transfer events (associated with the CSTF) evaluated in the Saltstone Facility CHA and is the inventory assumed for these events in the Hazard Categorization determination for the Saltstone Facility. Additional conservatism exists through understanding that the curie content of the waste sent to the Saltstone Facility from the CSTF is normally well below the values that have been analyzed for Saltstone Facility events.

5.8 REFERENCES

1. Nuclear Safety Management, Subpart B, Title 10 Code of Federal Regulations (CFR) Part 830, Safety Basis Requirements. U.S. Department of Energy, Washington DC, January 2001.

2. Preparation Guide for U.S. Department of Energy Nonreactor Nuclear Facility Documented Safety Analyses. DOE-STD-3009-94, Change Notice No. 3, U.S. Department of Energy, Washington DC, March 2006.

3. Implementation Guide For Use In Developing Technical Safety Requirements. DOE G 423.1-1A, U.S. Department of Energy, Washington DC, November 2010.

4. Deleted

5. Deleted

6. Deleted

7. Deleted

8. Deleted

9. Deleted

10. Deleted

11. Deleted

12. Specific Administrative Controls. DOE-STD-1186-2004, U.S. Department of Energy, Washington DC, August 2004.

13. Deleted

14. Deleted

15. Deleted

16. Deleted

17. Deleted

18. Deleted

19. Concentration, Storage and Transfer Facilities Documented Safety Analysis. WSRC-SA-2002-00007.

20. Deleted

21. Deleted

22. Deleted

23. NFPA 69, Standard on Explosion Prevention Systems. National Fire Protection Association, Quincy MA, 2014 Edition.

24. Deleted

25. Deleted

26. Deleted

27. Deleted

28. Deleted

29. Deleted

30. Deleted

31. Deleted

32. Technical Safety Requirements Methodology Manual (U). WSRC-TR-2003-00573, Rev. 6.

33. Deleted

34. Saltstone Facility SDU 2 and SDU 3/5 Flammability Analysis (U). S-CLC-Z-00080, Rev. 1.

35. Criticality Safety Program Description Document (CSPDD) for the M&O Contractor (Savannah River Nuclear Solutions) and Liquid Waste Contractor (Savannah River Remediation). N-NCS-G-00136, Rev. 3, July 2016.

36. Deleted

37. Deleted

38. Currie, L.A., Limits for Qualitative Detection and Quantitative Determination. Analytical Chemistry, 40:3, 586 (1968).

39. Determination of Method Reporting Limits for Select Analytes by GC/MS. SRNL-TR-2010-00206, Rev. 0, October 2010.

40. Hydrogen Generation Rates for Tank Farm Applications. WSRC-TR-98-00303, Rev. 0, December 1998.

41. Deleted

42. Saltstone Facility SDU 6 Flammability Analysis (U). S-CLC-Z-00115, Rev. 2.

43. Saltstone Facility SDU 6 NFPA Flammability Analysis (U). S-CLC-Z-00116, Rev. 1.

44. Deleted

45. Determination of the Vault 2 Cell Grout Height Uncertainty, P-CLC-Z-00003, Rev. 0.

46. Conduct of Engineering, Procedure Manual E7.

5.9 TABLES

Table 5.5.1.3-1
Deleted

Table 5.5.2.16-1
SDU 6 Grout Height Indicator Designation

Grout Pour Port	Grout Height Indicator Location
G1	H8, H9, J8, J9
G2	C10, D10
G3	C7, D7
G4	G13, G14
G5	G3, G4
G6	K13, K14
G7	K3, K4
G8	N10, P10
G9	N7, P7

SALTSTONE FACILITY

DOCUMENTED SAFETY ANALYSIS

CHAPTER 6

PREVENTION OF INADVERTENT CRITICALITY

Revision 15

July 2018

TABLE OF CONTENTS

Page

6.0 PREVENTION OF INADVERTENT CRITICALITY 6-1

6.1 INTRODUCTION 6-1

6.2 REQUIREMENTS 6-1

6.3 CRITICALITY EVALUATION 6-1

6.3.1 Fissile Material Concentration Exceeded in SSRT or SFT Due to an Inadvertent Transfer SFT from a HLW Tank 6-1

6.3.2 Fissile Material Precipitation in SSRT or SFT 6-2

6.3.3 Fissile Material Concentration in SSRT or SFT Due to Evaporation 6-2

6.3.4 Long Term Fissile Material Accumulation in SSRT or SFT 6-2

6.3.5 Collection of Fissile Material in SSRT or SFT Due to Intended Transfers from Tank 50H 6-2

6.3.6 Fissile Material Concentration/Accumulation in the Grout Mixer 6-3

6.3.7 Fissile Material Accumulation in the Grout Hopper 6-3

6.3.8 Fissile Material Precipitation in CCBT Due to an Inadvertent Transfer from SSRT or SFT 6-3

6.3.9 Fissile Material Precipitation in Process Water Tank Due to an Inadvertent Transfer from SSRT or SFT 6-3

6.3.10 Fissile Material Accumulation in Saltstone Hopper Overflow Container 6-4

6.3.11 Fissile Material Concentration in SSRT or SFT Due to the Presence of the Solvent Used in the MCU Process 6-4

6.3.12 Fissile Material Precipitation in SSRT or SFT Due to Inadvertent Transfer of Scrub or Strip Solution from MCU 6-4

TABLE OF CONTENTS (continued)

Page

6.3.13 Fissile Material Precipitation/Accumulation in SSRT or SFT and Grout Mixer Due to Q2 (ACP) and Daratard 17 Additions 6-4

6.3.14 Accumulation and Concentration of Fissile Material in SSRT Enclosure After a Large Leak 6-5

6.3.15 Long Term Accumulation of Fissile Material in SSRT Enclosure Due to a Small Leak 6-5

6.3.16 Fissile Material Accumulation/Concentration in SDUs 6-5

6.3.17 Grout Hydration Reactions 6-6

6.3.18 Accumulation of Fissile Material in the CCBT or SFT Enclosures Due to a Leak 6-6

6.3.19 Accumulation of Fissile Material in the 210-Z Process Room Due to a Leak 6-6

6.3.20 Freezing of Material in SSRT or SFT 6-6

6.4 REFERENCES 6-7

6.0 PREVENTION OF INADVERTENT CRITICALITY

6.1 INTRODUCTION

Management Policy (MP) 4.5 of Manual 1-01 (Ref. 4) establishes the Nuclear Criticality Safety (NCS) Program for the SRS. MP 4.5 states that the site Criticality Safety Program (CSP) shall be applicable to any process, structure or system that requires the control of one or more parameters for Criticality Safety purposes. The SRS CSP is described in the Criticality Safety Program Description Document (Ref. 5). The SRS CSP implements the requirements of DOE Order 420.1C (Ref. 6) as described in SCD-3 (Ref. 7). Because the Saltstone Facility contains fissionable material, the SRS CSP is implemented for Saltstone.

6.2 REQUIREMENTS

DOE Order 420.1C (Ref. 6) provides the basic elements for an NCS program to ensure that criticality safety is comprehensively addressed and receives an objective review. The DOE Order requires that all identifiable risks be reduced to acceptably low levels and that management authorization of the operation shall be documented. This DOE Order mandates the use of several American Nuclear Society (ANS) Criticality Safety Standards and invokes the application of the basic elements and control parameters therein. The specific DOE Order and mandatory ANS Standards requirements are contained in the S/RID (Ref. 8), Functional Area 18, Nuclear and Process Safety, as well as in the Nuclear Criticality Safety Manual, SCD-3 (Ref. 7). The S/RID (Ref. 8) serves as the controlling document for programmatic requirements.

6.3 CRITICALITY EVALUATION

The potential for a nuclear criticality has been evaluated in the NCSE (Ref. 2) and determined to be incredible based on inventory controls within the Saltstone Facility WAC and the nature of the Saltstone Facility process. Inventory as specified in Chapter 3 and controlled by the Saltstone Facility WAC limits the amount of fissile materials introduced into the facility.

This NCSE was performed to evaluate the credibility of a criticality event due to inadvertent and intended transfers of waste salt solution from the Tank 50H valve box to the Saltstone Facility and throughout saltstone processing.

The NCSE identified the following scenarios as potential criticality events associated with the SPF and the SDF. For each of the scenarios summarized below, the concentration mechanisms of precipitation, evaporation, accumulation, dilution, chemical extraction, and freezing have been evaluated as appropriate to determine if a credible mechanism to achieve a critical density of fissile material exists.

6.3.1 FISSILE MATERIAL CONCENTRATION EXCEEDED IN SSRT OR SFT DUE TO AN INADVERTENT TRANSFER FROM A HLW TANK

The alkalinity of the salt solution limits the solubility of the fissile materials to well below the single parameter subcritical concentration limit for U-235. Should the inadvertent transfer contain significant quantities of sludge, the neutron absorbing materials (iron, manganese, etc.)

inherently present in the sludge keep the sludge subcritical under all normal and credible abnormal conditions.

6.3.2 FISSILE MATERIAL PRECIPITATION IN SSRT OR SFT

Potential mechanisms for precipitation of fissile materials from the salt solution in the SSRTs or SFT were evaluated in this scenario. The precipitation mechanisms that were evaluated were temperature changes, dilution of salt solution, pH changes, and the grout component's affinity for fissile material. Considering: 1) the lack of a mechanism to appreciably precipitate fissile material, 2) the low solubility of fissile materials in salt solutions and corresponding limited mass of fissile material in an SSRT or the SFT, and 3) the large SSRT cross sectional area, criticality in an SSRT or the SFT, due to precipitation, is judged incredible.

6.3.3 FISSILE MATERIAL CONCENTRATION IN SSRT OR SFT DUE TO EVAPORATION

The SSRTs and SFT are vented to the SSRT PVVS and Facility PVVS respectively, which can potentially cause excessive evaporation of the waste salt solution, resulting in increased concentration of fissile material in the SSRTs or SFT. Considering, 1) the low solubility of fissile materials in salt solutions that is the basis for criticality safety of such solutions, 2) the neutron absorbing elements associated with the insoluble fissile solids in sludge, and 3) the large SSRT cross sectional area (nominally 26 feet in diameter), criticality in an SSRT or the SFT, due to excessive evaporation is judged incredible.

6.3.4 LONG TERM FISSILE MATERIAL ACCUMULATION IN SSRT OR SFT

This scenario postulates long-term accumulation of fissile material in an SSRT or the SFT due to receiving and processing a large volume of salt solution. Long-term accumulation of fissile solids at the bottom of an SSRT or the SFT is not a criticality concern because of the low concentration of fissile solids in the salt solutions and presence of neutron absorbing elements such as iron and manganese in the small amount of sludge entrained in salt solution. There are no mechanisms in an SSRT or the SFT for preferential accumulation of fissile material. Therefore, this is not a credible criticality concern.

6.3.5 COLLECTION OF FISSILE MATERIAL IN SSRT OR SFT DUE TO INTENDED TRANSFERS FROM TANK 50H

Intended transfers of waste salt solution from Tank 50H to an SSRT or the SFT require characterization of the salt solution and demonstrated compliance with the Saltstone Facility WAC program prior to transfer to Z-Area to ensure that the concentrations of the fissile isotopes in the salt solution are within the WAC limits. The WAC concentration limits maintain the concentration of fissile materials well below the single parameter subcritical concentration limit for U-235. Tank 50H solids potentially sent to an SSRT or the SFT do not have an affinity for uranium and have no appreciable affinity for neptunium or plutonium that would lead to a critical configuration in the Tank 50H solids. Additionally, there are no physical or chemical mechanisms that can change properties of material transferred to an SSRT or the SFT.

Therefore, intended transfers to an SSRT or the SFT from Tank 50H do not pose a credible criticality concern.

6.3.6 FISSILE MATERIAL CONCENTRATION/ACCUMULATION IN THE GROUT MIXER

Accumulation of fissile materials in the grout mixer is not a credible criticality concern because of the low concentration of fissile material in the salt solutions, the small volume of the mixer, and the mixer design features that allow all parts that come into contact with the saltstone grout to be flushed with inhibited water at the end of each production cycle. The fissile materials in the waste salt solution are well dispersed throughout the grout by mixing and agitation during its preparation. Therefore, there are no credible criticality concerns with this operation.

6.3.7 FISSILE MATERIAL ACCUMULATION IN THE GROUT HOPPER

Accumulation of fissile materials in the grout hopper is not a credible criticality concern because of the low concentration of fissile material in the salt solutions, the small volume of the grout hopper (significantly less than the 2,600 gallons required to reach the single parameter subcritical mass limit), and the presence of spray nozzles inside the grout hopper for flushing the grout hopper with IW or PW at the end of each daily production cycle.

6.3.8 FISSILE MATERIAL PRECIPITATION IN CCBT DUE TO AN INADVERTENT TRANSFER FROM SSRT OR SFT

This scenario postulates precipitation of fissile materials in the CCBT due to an inadvertent transfer of salt solution from an SSRT or the SFT. While an inadvertent transfer from an SSRT or the SFT to the CCBT is considered unlikely, an inadvertent transfer will remain subcritical because: 1) the concentration of fissile materials in the resulting solution in the CCBT will be less than that in an SSRT or the SFT, 2) only a small amount of fissile materials (much less than the single parameter subcritical mass limit for U-235), due to the low concentration of fissile materials in the salt solutions and the limited transfer volume, will be transferred to the CCBT, and 3) any potential precipitation of fissile materials as a result of dilution of the transferred salt solution would be insufficient to cause a criticality concern due to the large CCBT inner cross sectional area (~25 feet in diameter). Therefore, a criticality in the CCBT due to an inadvertent transfer from an SSRT or the SFT is not credible.

6.3.9 FISSILE MATERIAL PRECIPITATION IN PROCESS WATER TANK DUE TO AN INADVERTENT TRANSFER FROM SSRT OR SFT

This scenario postulates precipitation of fissile materials in the PW Tank due to an inadvertent transfer of salt solution from an SSRT or the SFT. While an inadvertent transfer from an SSRT or the SFT to the PW Tank is considered unlikely, an inadvertent transfer from an SSRT or the SFT to the PW Tank will remain subcritical because 1) the concentration of fissile materials in the resulting solution in the PW Tank will be less than that in an SSRT or the SFT, 2) only a small amount of fissile materials (much less than the single parameter subcritical mass limit for U-235), due to the low concentration fissile materials in the salt solutions and the limited transfer volume, will be transferred to the PW Tank, and 3) any potential precipitation of fissile materials

as a result of dilution of the transferred salt solution would be insignificant to cause a criticality concern due to the large PW Tank inner cross sectional area (~21 feet in diameter). Therefore, a criticality in the PW Tank, due to an inadvertent transfer of salt solution from an SSRT or the SFT, or due to small leaks through the isolation valves, is incredible.

6.3.10 FISSILE MATERIAL ACCUMULATION IN SALTSTONE HOPPER OVERFLOW CONTAINER

Because of the very low concentration of fissile materials in the salt solution and the small volume of the SHOC, accumulation of enough fissile materials in the SHOC to exceed the subcritical aqueous solution fissile mass limit is not a credible criticality concern.

6.3.11 FISSILE MATERIAL CONCENTRATION IN SSRT OR SFT DUE TO THE PRESENCE OF THE SOLVENT USED IN THE MCU PROCESS

This scenario postulates concentrating fissile material in an SSRT or the SFT due to the presence of the Caustic Side Solvent Extraction (CSSX) solvent used in the MCU process. Studies have shown that the CSSX solvent in alkaline solution does not appreciably extract uranium and plutonium from the alkaline salt solution. Concentrations of uranium and plutonium in the solvent in contact with alkaline salt solution are no greater than the concentrations in the alkaline salt solution (which in Tank 50H, an SSRT, or the SFT are much less than subcritical concentration limits). Therefore, criticality in an SSRT or the SFT, due to the concentration/accumulation of fissile material in the CSSX solvent, is incredible.

6.3.12 FISSILE MATERIAL PRECIPITATION IN SSRT OR SFT DUE TO INADVERTENT TRANSFER OF SCRUB OR STRIP SOLUTION FROM MCU

This scenario postulates precipitation of fissile material in an SSRT or the SFT due to chemistry changes as a result of receiving an inadvertent nitric acid (Scrub Feed or Strip Feed from BOBCalix-based solvent) or boric acid (from NGS Strip Feed) transfer from MCU via Tank 50H. An inadvertent transfer of either acid to the Decontaminated Salt Solution Hold Tank (DSSHT) is extremely unlikely since there is no direct line between the acid tanks and the DSSHT. However, if a transfer were to occur, a criticality accident in the DSSHT due to the addition of acid is deemed incredible. Since any transfers from the DSSHT to Tank 50H (and then to an SSRT or the SFT) of DSS exposed to a significant amount of acid will result in further dilution of the acid both in Tank 50H and in an SSRT or the SFT, the effect of the acid in an SSRT or the SFT will be much less than in the DSSHT. Boric acid is a weaker acid than nitric acid and its effects on precipitation in the DSS will be bounded by the nitric acid effects. The effect of NaOH as the scrub is also bounded by the effect of nitric acid. Therefore, criticality in an SSRT or the SFT due to the addition of scrub or strip solution to the DSSHT with subsequent transfer to an SSRT or the SFT is incredible.

6.3.13 FISSILE MATERIAL PRECIPITATION/ACCUMULATION IN SSRT OR SFT AND GROUT MIXER DUE TO Q2 (ACP) AND DARATARD 17 ADDITIONS

This scenario postulates potential precipitation/accumulation of fissile material in an SSRT or the SFT and grout mixer due to the addition of dilute Q2 (ACP) and Daratard 17. Although the

Admixture Chemical Station is no longer part of the process, it is retained here to ensure conservatism in the criticality analysis. While the Q2 (ACP), and Daratard 17 are not expected to alter the salt solution chemistry, if they were to cause any precipitation of fissile material, the probable location for the reaction would be downstream of an SSRT or the SFT. The precipitation of fissile material is not a criticality concern here due to the low concentration of fissile material in the salt solution and the small volume of equipment (piping, mixer, and grout hopper) involved. Also, in the unlikely event of significant precipitation, there is no physical or chemical mechanism that would concentrate or accumulate fissile materials in the mixer or grout hopper. Criticality in an SSRT or the SFT involving precipitation of fissile material due to admixture addition (if admixture is added) is not credible due to the following: the volume of admixtures added to an SSRT or the SFT is a small fraction of an SSRT or the SFT solution volume and thus can change the salt solution pH only a very small amount, the maximum fissile material concentration in the salt solution is more than a factor of 100 less than the single parameter subcritical concentration limit for U-235, and the large interior cross sectional area of an SSRT (nominally 26 feet in diameter). Therefore, precipitation / accumulation of fissile materials in an SSRT or the SFT, or in the grout mixer due to the presence of the admixtures (if admixtures are added) is not a credible criticality concern.

6.3.14 ACCUMULATION AND CONCENTRATION OF FISSILE MATERIAL IN SSRT ENCLOSURE AFTER A LARGE LEAK

This scenario postulates a large leak into the sump resulting in a critical configuration. The salt solution has a maximum fissile concentration that is over 150 times less than the subcritical concentration limit for U-235. A large leak would be detected and pumped to a tank prior to being allowed to concentrate (e.g., evaporate) by a factor of 150. A large leak, containing greater than a subcritical mass, would overflow the sump and spread on the floor. Due to the low concentration of fissile material in the solution, it is not credible to exceed the subcritical areal density limit on the floor. Therefore, a criticality in an SSRT cell due to a large leak of salt solution is not credible.

6.3.15 LONG TERM ACCUMULATION OF FISSILE MATERIAL IN SSRT ENCLOSURE DUE TO A SMALL LEAK

This scenario postulates several small leaks occurring over time, not being detected, and allowed to evaporate. Small leaks would likely spill onto the floor and evaporate without collecting in the sump. Due to the low concentration of fissile material, it is not credible to leak enough salt solution to exceed the areal density on the floor. There is the potential for small leaks to collect in the sump and evaporate leaving the fissile material in the sump. Based on the areal density limit, the sump would require over 28,000 gallons of salt solution to collect and evaporate. It is not credible that this volume of material could collect and evaporate without detection in the sump. Therefore, a criticality in an SSRT enclosure sump due to accumulation of small leaks is not credible.

6.3.16 FISSILE MATERIAL ACCUMULATION/CONCENTRATION IN SDUS

The NCSE identified no credible mechanism to collect or concentrate fissile materials within the grout in an SDU. Therefore, there is no credible criticality concern.

6.3.17 GROUT HYDRATION REACTIONS

In an SDU, hydration reactions convert the grout to a stable solid that immobilizes all fissile materials in the solidified grout. From hydration of the grout, the concentration of fissile materials in the grout increases by a factor of 1.22 (Ref. 2). This fissile material concentration change remains well below the single parameter subcritical concentration limit for U-235. Therefore, this scenario does not pose a credible criticality concern.

6.3.18 ACCUMULATION OF FISSILE MATERIAL IN THE CCBT OR SFT ENCLOSURES DUE TO A LEAK

The CCBT does not usually contain fissile material. The SFT may contain fissile material from Tank 50H. The salt solution transfer line goes through both the CCBT and SFT enclosures. Therefore, it is possible to have a leak into the CCBT or SFT enclosures that would contain fissile material. Both the CCBT and SFT enclosures contain a 3 ft x 3 ft sump. A large leak would evaporate on the floor. It is not credible to exceed the areal density on the floor (see Section 6.3.14). Assuming a 10 gal/day leak, it would take 3.5 years to accumulate sufficient fissile material to exceed the areal density within either sump. Therefore, a criticality due to accumulation of fissile material from leaks into the CCBT or SFT enclosures is not credible.

6.3.19 ACCUMULATION OF FISSILE MATERIAL IN THE 210-Z PROCESS ROOM DUE TO A LEAK

Salt solution can leak into the process room. The process room does not contain a sump. Instead, it has a trench which drains to the SFT. The spill could contain 4,200 grams of U-235 (eq), assuming the solution is at the DSA limit. Based on the size of the trench, over 12,000 grams would have to accumulate to exceed the areal density within the trench. Small leaks are not a concern for the process room as there is no collection point. If the drain to the SFT was plugged, the small leaks would not have a collection point and would be similar to a large leak and spread over the trench. Therefore, a criticality due to accumulation of leaks in the process room is not credible.

6.3.20 FREEZING OF MATERIAL IN SSRT OR SFT

This scenario postulates a criticality in an SSRT or the SFT due to the tank contents freezing and concentrating the fissile material. Due to the low initial fissile material concentration, it is not credible freezing could concentrate the fissile material by a factor of 150, which is required to exceed the subcritical concentration limit.

In summary, the NCSE identified no credible criticality scenarios for the SPF or SDF. The NCSE is valid for fissile material concentrations in salt solutions that result in fissile activity limits less than or equal to the DSA bounding concentrations (refer to Chapter 3, Table 3.6-6).

6.4 REFERENCES

1. Deleted

2. Nuclear Criticality Safety Evaluation for Z-Area (U). N-NCS-Z-00001, Rev. 13.

3. Deleted

4. Nuclear and Process Safety. Management Policies. Manual 1-01, MP 4.5.

5. Criticality Safety Program Description Document (CSPDD) for the M&O Contractor (Savannah River Nuclear Solutions) and Liquid Waste Contractor (Savannah River Remediation). N-NCS-G-00136, Rev. 3, July 2016.

6. Facility Safety. DOE Order 420.1C, Change 1, U.S. Department of Energy, Washington DC, February 2015.

7. Nuclear Criticality Safety Manual. SCD-3.

8. Standards/Requirements Identification Document, Functional Area 18.0, Nuclear and Process Safety (U). SRR-RP-2009-00558.

9. Deleted

10. Deleted

SALTSTONE FACILITY

DOCUMENTED SAFETY ANALYSIS

CHAPTER 7

RADIOLOGICAL PROTECTION

Revision 13

July 2016

TABLE OF CONTENTS

Page

7.0 RADIOLOGICAL PROTECTION 7-1

7.1 INTRODUCTION 7-1

7.2 REQUIREMENTS 7-1

7.3 RADIOLOGICAL PROTECTION PROGRAM AND ORGANIZATION 7-1

7.3.1 Radiological Protection Program 7-1

7.3.1.1 Program Organization 7-2

7.3.1.2 Program Objectives 7-2

7.3.2 Saltstone Facility Program and Objective 7-2

7.4 ALARA POLICY AND PROGRAM 7-3

7.5 RADIOLOGICAL PROTECTION TRAINING 7-4

7.6 RADIATION EXPOSURE CONTROL 7-4

7.7 RADIOLOGICAL MONITORING 7-4

7.7.1 Radiological Control Monitoring and Surveys 7-5

7.7.2 Radiological Environmental Monitoring 7-5

7.7.3 Associated Records/Reports 7-5

7.7.4 Meteorological Data Collection/Evaluation 7-5

7.8 RADIOLOGICAL PROTECTION INSTRUMENTATION 7-5

7.9 RADIOLOGICAL PROTECTION RECORD KEEPING 7-6

7.10 OCCUPATIONAL RADIATION EXPOSURES 7-6

7.11 REFERENCES 7-7

7.0 RADIOLOGICAL PROTECTION

7.1 INTRODUCTION

This chapter of the Saltstone Facility DSA provides information on the Radiological Protection Program for the worker and the public, as it applies to the Saltstone Facility. This chapter relies heavily upon the information provided in the Radiological Control Manual 5Q (Ref. 2), and refers to it as necessary. This section of the DSA describes the interfaces between the Saltstone Facility and the site and business unit-level programs. The scope of this chapter includes the following:

- Description of the overall Radiological Protection Program and organization
- Descriptions of the policies and programs for reducing radiation exposures to values that are ALARA
- Description of radiation exposure control including administrative limits, radiological practices, dosimetry, and respiratory protection
- Identification of the radiological monitoring program to protect workers, the public, and the environment
- Identification of the radiological training programs for onsite workers
- Description of the program for maintaining records of radiation sources, releases, and occupational exposures

Although general knowledge of and compliance with the Radiological Protection Program are acknowledged, no specific attribute of this program is credited in the safety analysis as documented in Chapter 3.

7.2 REQUIREMENTS

S/RIDs state the codes, standards, and regulations governing the Radiological Protection Program elements of the SRS (Ref. 3). Programmatic compliance assessments are performed against the S/RIDs and documented as specified in the Procedure Manual 8B (Ref. 4). The Standards Management/Compliance Section maintains records of the programmatic compliance assessments.

The format and content of this chapter satisfies the requirements of DOE-STD-3009-94 (Ref. 1).

7.3 RADIOLOGICAL PROTECTION PROGRAM AND ORGANIZATION

This section provides information on the SRS Radiological Protection Program and organization applicable to the Saltstone Facility.

7.3.1 RADIOLOGICAL PROTECTION PROGRAM

A description of the components of the Radiological Protection Program at SRS and the Saltstone Facility is contained in the following subsections.

7.3.1.1 Program Organization

The Radiological Protection Program consists of a stand-alone radiological controls program for LW, which implements procedures and requirements established by a central, site-wide, Radiological Protection Services (RPS) group. The RPS is the responsible consulting authority within SRS for radiological protection of site personnel and the public. This department is responsible for awareness, analysis, and advice to other departments on hazards incident to the handling, use of, and exposure to, radioactive materials. RPS is also consulted for guidance in radiological protection of SRS employees, equipment, and the environment. Responsibility for radiological safety at SRS rests with departmental line organizations.

7.3.1.2 Program Objectives

The Radiological Protection Program objectives are as follows:

- Maintain radiation exposures ALARA and prevent or limit contamination to personnel
- Minimize internal assimilation of radioactive material, consistent with maintaining total dose ALARA
- Minimize contamination of facilities
- Minimize the release of radioactive material to the environment
- Train exempt and nonexempt Radcon personnel in radiological work
- Maintain and provide QA/control on the various procedures and the equipment to ensure proper implementation of Radcon programs and operations
- Measure and record personnel radiation dose
- Provide support for emergency response activities
- Interface with other site safety organizations (IH and Employee Safety) to ensure consistent program implementation

Details of the Radiological Protection Program objectives are provided in Procedure Manual 5Q (Ref. 2).

7.3.2 SALTSTONE FACILITY PROGRAM AND OBJECTIVES

Implementation of the Radiological Protection Program at the Saltstone Facility is the responsibility of the Safety and Health (S&H) area manager. The S&H manager reports to the LW area department manager on a line basis.

Radiological Control Operations (RCO) personnel assigned to the Saltstone Facility report to the S&H area manager. A sufficient level of RCO staff is maintained at the facility and at the SRS level to ensure that the goals of the RPS program are maintained. Personnel associated with the RPS program must have a combination of education, experience, and training in order to perform their duties (Procedure Manual 5Q, Ref. 2). The managers of RPS programs are involved directly in the training and qualification of RCO inspectors and First Line Managers.

General responsibilities of RCO personnel at the Saltstone Facility include the following:

- Ensure that radiological operations of the facilities are conducted in accordance with plant policies and procedures
- Provide recommendations, advice and guidance concerning radiological safety
- Ensure that environmental protection is effective
- Maintain records to assist in the general program to maintain personnel exposure within ALARA guidelines

Generic job descriptions and responsibilities for the various RCO positions are provided in Procedure Manual 5Q (Ref. 2).

7.4 ALARA POLICY AND PROGRAM

The Saltstone Facility follows the SRS ALARA policy and program as discussed in the Savannah River Site ALARA Manual SCD-6 (Ref. 5), and Radiological Control Manual 5Q (Ref. 2). The ALARA concept is integrated into all Saltstone Facility activities involving radioactive materials and work performed in radiological areas. Training is provided to all site personnel commensurate with the work to be performed according to Chapter 6 of the SRS ALARA Manual SCD-6 (Ref. 5) and Chapter 6 of the Radiological Control Manual 5Q (Ref. 2).

The facility Radiological Protection Program ensures that individual and collective radiological exposures are maintained ALARA by use of the following:

- Integrating the support functions of Radiological Control into daily operations and long term planning
- Participating in required site radiological training
- Creating barriers for and posting controlled areas
- Using RWPs
- Monitoring and controlling accumulated doses to workers
- Controlling the generation and spread of radiological contamination
- Managing radioactive material
- Monitoring and controlling radioactive effluent streams

7.5 RADIOLOGICAL PROTECTION TRAINING

The Saltstone Facility follows the site program for training and frequency of training as outlined in Radiological Control Manual 5Q (Ref. 2). The appropriate level of radiological training is provided to each worker in the facility as well as to radiological protection personnel. Chapter 6 of the Radiological Control Manual 5Q (Ref. 2) contains the SRS requirements for radiation safety training including the frequency of training. The SRS Radiological Protection Program includes the following radiological protection training:

- General Employee Radiological Training: General Employee Radiological Training is required for all personnel who may routinely enter a controlled area unescorted and prior to receiving occupational radiation exposure during access to controlled areas. Visitors who enter a controlled area must be continuously escorted by a trained escort and must receive a radiological safety orientation as prescribed by Chapter 6 of the Radiation Control Manual 5Q (Ref. 2).
- Radiological Worker Training: Radiological Worker Training (RWT) consists of Radiological Worker (RW) I and RW II. Specialized RWT must be completed for nonroutine operations or for work in areas with changing radiological conditions. This training is in addition to the RW II training and is required for personnel planning, preparing, and performing jobs that have the potential for High radiological consequences (Ref. 2).
- Radiological Control Inspector Training: Chapter 6 of the Radiological Control Manual 5Q (Ref. 2) defines and describes the selection, initial training, qualification, continuing training and re-qualification requirements of the Radiological Control Inspector (RCI) training program. The RCI training program is implemented at SRS according to Chapter V of the Health Protection Department Procedures Manual 5Q-1 (Ref. 6).

Additional information of training development, the maintenance of training programs, and any modifications of the training materials is given in Chapter 12, “Procedures and Training” of this DSA.

7.6 RADIATION EXPOSURE CONTROL

Radiation exposure in nuclear facilities is carefully controlled to prevent or minimize any radiation induced health effects. Administrative dose limits, good radiological practices, dosimetry programs, and respiratory protection equipment applicable to controlling radiation exposure are detailed in Procedure 5Q and are implemented directly at the Saltstone Facility (Ref. 2).

7.7 RADIOLOGICAL MONITORING

The Saltstone Facility follows the SRS guidelines on radiological monitoring, surveys, contamination control, and records (generated at the Saltstone Facility as part of the air sampling and monitoring program) as described in Procedure Manuals 5Q1.2 and 5Q1.7 (Ref. 7, 8).

7.7.1 RADIOLOGICAL CONTROL MONITORING AND SURVEYS

The Saltstone Facility follows the SRS guidelines on radiological monitoring and surveys, as described in the Radiological Control Manual 5Q (Ref. 2). Chapter 5, Part 5 of Procedure Manual 5Q, describes the following topics of the SRS radiological monitoring and survey program:

- Radiation exposure monitoring
- ARMs
- Contamination monitoring
- Airborne radioactivity monitoring

7.7.2 RADIOLOGICAL ENVIRONMENTAL MONITORING

The Saltstone Facility adheres to the SRS guidelines on radiological environmental monitoring. Chapter 1 of the Environmental Compliance Manual 3Q (Ref. 9) describes the following topics of the SRS radiological environmental monitoring program:

- Radiological effluent monitoring – general requirements
- Radiological effluent monitoring – liquid effluents
- Radiological effluent monitoring – airborne effluents
- Radiological environmental surveillance

7.7.3 ASSOCIATED RECORDS/REPORTS

Records generated at the Saltstone Facility as part of the radiological environmental sampling and monitoring program are maintained in accordance with the Radiological Control Manual 5Q (Ref. 2).

7.7.4 METEOROLOGICAL DATA COLLECTION/EVALUATION

The Saltstone Facility has no facility specific meteorological data collection stations and uses the SRS meteorology program as described in Section 1104, "*Meteorological Monitoring*" of the Environmental Monitoring Program (Ref. 10).

7.8 RADIOLOGICAL PROTECTION INSTRUMENTATION

The Saltstone Facility follows the SRS guidelines for selection of equipment and instrumentation, control of the calibration process, and QA for calibration and maintenance of radiological protection instrumentation. Procedure Manual 5Q discusses the radiological protection instrumentation program (Ref. 2).

Chapter 2 discusses the area monitors at the Saltstone Facility. Details on this equipment are discussed in Reference 7.

7.9 RADIOLOGICAL PROTECTION RECORD KEEPING

Procedure Manual 5Q contains the prescribed practices for preparing and retaining radiologically related records for the Saltstone Facility (Ref. 2).

The RPS is responsible for the inventory, retention, disposition, and maintenance of radiological records at the Saltstone Facility. Procedure Manual 5Q provides further information on inventory, retention, disposition, radiological reporting of records, and the maintenance of plans and procedures for the Saltstone Facility (Ref. 2).

7.10 OCCUPATIONAL RADIATION EXPOSURES

Penetrating radiation at the Saltstone Facility exists as gamma radiation resulting from the beta-gamma decay of radionuclides in the salt solution and saltstone grout process streams and in the solidified saltstone. Exposure to this radiation cannot be eliminated but is reduced through facility design (i.e., system configuration and shielding) and facility controls (i.e., restricted access and limited stay-times) discussed in Procedure Manual 5Q (Ref. 2).

The following Saltstone Facility features are examples of items that may be used to limit worker exposure to radiation:

- A shield plate is provided above the SSRTs and SFT
- A shield door is installed at the enclosure entrance to the SFT as required
- A labyrinth wall is provided at the enclosure entrance to the SSRT pump gallery for shielding
- Reducing the allowable salt solution level in an SSRT
- Access to the process area containing the saltstone mixing equipment (Building 210-Z) is minimized while the process is in operation
- Grout transfer line shielding is provided
- Process room shielding (concrete block wall is installed in front of the CCR viewing windows.)
- Fencing is installed around high radiation areas with locked/controlled access

Radiological goals are established annually by management in consultation with the Site ALARA Committee. The establishment and maintenance of goals, their periodic review, and comparison with actual data are methods for progress toward reducing exposures to ALARA. These goals are established, maintained and implemented per the SRS ALARA Manual SCD-6 (Ref. 5) and Procedure Manual 5Q (Ref. 2). DSA accident analyses assumed a higher Ci loading than was used for the shielding analysis. The exposure level and shielding design is protected by the Saltstone Facility WAC Program.

7.11 REFERENCES

1. Preparation Guide for U.S. Department of Energy Nonreactor Nuclear Facility Documented Safety Analyses. DOE-STD-3009-94, Change Notice No. 3, U.S. Department of Energy, Washington DC, March 2006.
2. Radiological Control Manual. Procedure Manual 5Q.
3. Standards/Requirements Identification Document. SRR-RP-2009-00558.
4. Compliance Assurance Manual. Procedure Manual 8B.
5. Savannah River Site ALARA Manual. SCD-6.
6. Health Protection Department Procedures Manual. Procedure Manual 5Q1.1.
7. Safety and Health Department Radiation Monitoring Procedures. Procedure Manual 5Q1.2.
8. Radiation and Air Monitoring Systems. Procedure Manual 5Q1.7.
9. Environmental Compliance Manual. Procedure Manual 3Q.
10. Environmental Monitoring Program, Environmental Compliance and Area Completion Projects, Sample Data Management. SRNS-TR-2012-00202.

SALTSTONE FACILITY

DOCUMENTED SAFETY ANALYSIS

CHAPTER 8

HAZARDOUS MATERIAL PROTECTION

Revision 12

November 2015

TABLE OF CONTENTS

Page

8.0 HAZARDOUS MATERIAL PROTECTION 8-1

8.1 INTRODUCTION 8-1

8.2 REQUIREMENTS 8-1

8.3 HAZARDOUS MATERIAL PROTECTION PROGRAM AND ORGANIZATION 8-1

8.4 ALAP POLICY AND PROGRAM 8-1

8.5 HAZARDOUS MATERIAL TRAINING 8-2

8.6 HAZARDOUS MATERIAL EXPOSURE CONTROL 8-2

8.6.1 Hazardous Material Identification Program 8-2

8.6.2 Administrative Limits 8-2

8.6.3 Occupational Medical Program 8-3

8.6.4 Respiratory Protection Program 8-3

8.7 HAZARDOUS MATERIAL MONITORING 8-3

8.8 HAZARDOUS MATERIAL PROTECTION INSTRUMENTATION 8-3

8.9 HAZARDOUS MATERIAL PROTECTION RECORDKEEPING 8-3

8.10 HAZARD COMMUNICATION PROGRAM 8-4

8.11 OCCUPATIONAL CHEMICAL EXPOSURES 8-4

8.12 REFERENCES 8-5

8.0 HAZARDOUS MATERIAL PROTECTION

8.1 INTRODUCTION

The purpose of this chapter of the DSA for the Saltstone Facility is to describe the essential characteristics of the hazardous material protection program as it relates to facility safety.

This chapter describes the hazardous material protection provisions for Saltstone FWs and CWs for hazards other than radiological hazards. This chapter relies heavily upon the information provided in the Industrial Hygiene Manual 4Q (Ref. 2) and refers to it as necessary. The information specific to the Saltstone Facility that is not discussed in the Industrial Hygiene Manual 4Q (Ref. 2) is presented in this chapter. This chapter includes the following:

- Overall description of the hazardous material protection policy and program
- Information, as appropriate, on equipment and controls supporting hazardous material protection

8.2 REQUIREMENTS

The S/RIDs (Ref. 3) state the codes, standards, and regulations governing the hazardous material protection program elements of the SRS. Programmatic compliance assessments are performed against the S/RIDs and documented, as specified, in the Compliance Assurance Manual 8B (Ref. 4).

The format and content of this chapter satisfies the requirements of DOE-STD-3009-94 (Ref. 1).

8.3 HAZARDOUS MATERIAL PROTECTION PROGRAM AND ORGANIZATION

The Saltstone Facility follows the hazardous material protection program as discussed in the Industrial Hygiene Manual 4Q (Ref. 2), which describes the facility management and IH staff responsibilities. IH services at the Saltstone Facility are provided by the IH staff assigned to the Safety/Health and Process Support workgroup as part of the Saltstone organization. IH programmatic functions are managed by the IH Services Section within the Environmental, Safety, and Health Services Department. Safety and Health Programs, Safety and Health Department, and IH field activities are managed by the Safety and Health Department. Organizational responsibilities are discussed in the Management Policies Manual 1-01 (Ref. 5).

8.4 ALAP POLICY AND PROGRAM

The As Low As Practicable (ALAP) concepts are integrated in the IH Program as it relates to known or potential occupational carcinogens. The purpose of the program is to prevent occupationally induced cancer and other illnesses and preserve the health of SRS employees while striving to achieve compliance beyond what is required by DOE Orders and DOE-prescribed Occupational Safety and Health standards. The Industrial Hygiene Manual 4Q (Ref. 2) contains the procedures that implement these concepts.

The Industrial Hygiene Manual 4Q (Ref. 2) provides comprehensive direction for the following IH Program elements:

- Hazard assessment
- Hazard prevention and control
- Training (General Employee Training, Consolidated Annual Training, training for occupational exposed employees [direct or indirect involvement with hazards], unexposed employees, and employee training in equipment use)
- Self-assessments
- Record keeping
- Respiratory protection
- Special DOE/OSHA control programs
- Chronic beryllium disease prevention

8.5 HAZARDOUS MATERIAL TRAINING

Procedure 1001 of the Industrial Hygiene Manual 4Q (Ref. 2) describes the hazardous materials and industrial safety training requirements for site personnel and subcontractors and includes hazardous material protection training and specifies IH training requirements. The training of personnel on the configuration of equipment used to store, handle, transport, or process hazardous material, and the training of personnel in the use of up-to-date drawings and other documentation of system design and operation is facility-specific. Training and retraining frequencies are listed in Industrial Hygiene Manual 4Q (Ref. 2). Area-specific training for new or transferred employees is provided at their initial assignment to the area or facility.

8.6 HAZARDOUS MATERIAL EXPOSURE CONTROL

8.6.1 HAZARDOUS MATERIAL IDENTIFICATION PROGRAM

This section addresses the hazardous material identification program, referred to as the hazard assessment program, within the IH Program. Procedures 103, 104, and 105 of the Industrial Hygiene Manual 4Q (Ref. 2) provide descriptions of the methods used for identifying and evaluating health and chemical hazards and for determining the adequacy of, and the need for, hazard prevention or control measures. Chapter 15 of this DSA discusses the emergency response process for dealing with a hazardous material spill. Emergency Planning Hazards Assessments identify all chemical hazards in the Saltstone Facility resulting from postulated accidents.

8.6.2 ADMINISTRATIVE LIMITS

There are no specific nonradioactive hazardous material administrative control levels and exposure limits for the Saltstone Facility. SRS uses the specified industrial and governmental regulatory limits (i.e., permissible exposure limits and threshold limit values) implemented through the Industrial Hygiene Manual 4Q (Ref. 2) for nonradioactive hazardous material administrative control levels and exposure limits.

8.6.3 OCCUPATIONAL MEDICAL PROGRAM

There are no facility-specific requirements associated with the occupational medical program (e.g., physical examinations, medical evaluations, medical surveillance [including bioassay], and medical record keeping). Procedure 109 of the Industrial Hygiene Manual 4Q (Ref. 2) describes the site occupational medical program.

8.6.4 RESPIRATORY PROTECTION PROGRAM

Procedure 1301 of the Industrial Hygiene Manual 4Q (Ref. 2) provides a description of the Respiratory Protection Program. Procedure 1301 provides information on the responsibilities of the facility manager, the Field IH staff, the infrastructure maintenance, and the Health Physics Services. Procedure 1301 also describes the role of the Radiological Protection Operations, the responsibilities of the Respiratory Protection Program Administrator, the equipment needed for employee protection, and employee training.

8.7 HAZARDOUS MATERIAL MONITORING

The Industrial Hygiene Manual 4Q (Ref. 2) and the Industrial Hygiene Survey Manual 4Q1.1 (Ref. 6) address hazardous material monitoring for determining chemical exposures of facility personnel. The IH Program specifies the general requirements for workplace air sampling and data analysis. There is no Saltstone Facility continuous hazardous-material monitoring instrumentation or alarms that measure airborne hazardous material. Monitoring of hazardous material exposure is performed during scheduled inspections of hazardous material container contents and after the occurrence of an incident that involves the potential release of hazardous material, as required or determined by Saltstone Facility IH.

8.8 HAZARDOUS MATERIAL PROTECTION INSTRUMENTATION

Safety/Health and Process Support personnel monitor/support Saltstone Facility operations with portable equipment in accordance with the Industrial Hygiene Manual 4Q (Ref. 2). IH personnel maintain the equipment under the program in the Industrial Hygiene Manual 4Q. The IH personnel provide respiratory protection equipment (per site-recognized procedure or permits), conduct respirator fit testing, inspect and maintain respirators, and handle investigations of respirator malfunctions. Other than the instrumentation for radiological protection monitoring (discussed in Chapter 7), there is no special installed monitoring instrumentation for specific hazardous materials at the Saltstone Facility. Portable instruments for periodic hazardous material sampling are used and maintained by the IH technicians.

8.9 HAZARDOUS MATERIAL PROTECTION RECORDKEEPING

The records requirements within the sitewide IH Program are established in the Industrial Hygiene Manual 4Q (Ref. 2). Procedure 3.31 of the Management Requirements and Procedures Manual 1B (Ref. 8) addresses recordkeeping requirements for hazardous material protection information applicable sitewide and followed by the Saltstone Facility. These requirements include a program for retention, disposition, and accessibility of hazardous material protection records. Procedure 3.3.1 also provides information on the responsibilities of the Department of Records Officer (initiation of inventories, reviews or organization records, vital records, etc), and

employee responsibilities (creation and maintenance of documentation, protection or records, submittal of documentation for storage, etc.). The procedure also describes the form the record will be submitted (e.g., hardcopy records, electronic records, and vital records) and the process for retrieval and use of the documentation.

8.10 HAZARD COMMUNICATION PROGRAM

Requirements associated with the Hazard Communication (HAZCOM) program are listed in the Industrial Hygiene Manual 4Q (Ref. 2) and in Procedure 2.3 of the Chemical Management Manual 13B (Ref. 9). Procedure 2.3 of the Chemical Management Manual 13B addresses the chemical management program, describes the sitewide listing of chemicals, and summarizes personnel training and information dissemination.

The Subcontractor Technical Representative informs subcontractors of the requirements specified in the SRS HAZCOM program. Information on the hazards of chemicals used onsite is communicated through HAZCOM training, MSDSs, and hazard warning labels. Subcontractors are required to label and use chemicals as prescribed in site procedures and MSDSs.

8.11 OCCUPATIONAL CHEMICAL EXPOSURES

Historically, IH sampling data results show that the exposure levels to workers from nonradioactive materials are Negligible. SCD-7, Section 7.2 (Ref. 10) provides the actions to be taken in the event an exposure were to occur.

8.12 REFERENCES

1. Preparation Guide for U.S. Department of Energy Nonreactor Nuclear Facility Documented Safety Analyses. DOE-STD-3009-94, Change Notice No. 3, U.S. Department of Energy, Washington DC, March 2006.

2. Industrial Hygiene Manual. Procedure Manual 4Q.

3. Standards/Requirements Identification Document. SRR-RP-2009-00558.

4. Compliance Assurance Manual. Procedure Manual 8B.

5. Management Policies. Procedure Manual 1-01.

6. Industrial Hygiene Survey. Procedure Manual 4Q1.1.

7. Deleted

8. Management Requirements and Procedures. Procedure Manual 1B.

9. Chemical Management Manual. Procedure Manual 13B.

10. SRS Emergency Plan. SCD-7.

SALTSTONE FACILITY

DOCUMENTED SAFETY ANALYSIS

CHAPTER 9

RADIOACTIVE AND HAZARDOUS WASTE MANAGEMENT

Revision 13

July 2016

TABLE OF CONTENTS

Page

9.0 RADIOACTIVE AND HAZARDOUS WASTE MANAGEMENT 9-1

9.1 INTRODUCTION 9-1

9.2 REQUIREMENTS 9-1

9.3 RADIOACTIVE AND HAZARDOUS WASTE MANAGEMENT PROGRAM AND ORGANIZATION 9-1

9.4 RADIOACTIVE AND HAZARDOUS WASTE STREAMS AND SOURCES 9-2

9.4.1 Waste Management Process 9-2

9.4.2 Waste Sources and Characteristics 9-2

9.4.3 Waste Handling or Treatment Systems 9-3

9.5 REFERENCES 9-4

9.0 RADIOACTIVE AND HAZARDOUS WASTE MANAGEMENT

9.1 INTRODUCTION

This chapter of the Saltstone Facility DSA discusses the Saltstone Facility radioactive, hazardous, and mixed waste management program. This chapter includes the following:

- Description of the radioactive and hazardous material waste management policy, objectives, and philosophy
- Description of the Saltstone Facility waste management program and organization
- Identification of waste streams, including types, sources, and quantities

The scope of this chapter is the program for managing radioactive, hazardous, and mixed wastes that are generated by Saltstone Facility operations. Only Saltstone Facility radioactive and hazardous wastes resulting from operation and maintenance activities performed at the Saltstone Facility are discussed in this section. Although general knowledge of and compliance with the Radioactive and Hazardous Waste Management Program are acknowledged, no specific attribute of this program is credited in the safety analysis as documented in Chapter 3.

9.2 REQUIREMENTS

The S/RIDs (Ref. 2) state the codes, standards, and regulations governing the Radioactive and Hazardous Waste Management Program of the SRS. Programmatic compliance assessments are performed against the S/RIDs and documented as specified in the Compliance Assurance Manual 8B (Ref. 3).

The format and content of this chapter satisfies the requirements of DOE-STD-3009-94 (Ref. 1).

9.3 RADIOACTIVE AND HAZARDOUS WASTE MANAGEMENT PROGRAM AND ORGANIZATION

The goal of SRS management is to comply with the DOE Orders and state and federal regulations in the area of radioactive and hazardous waste management. Radioactive, hazardous, and mixed waste management at the Saltstone Facility is the responsibility of the Operations organization. Management has put in place the necessary organizations, policies, training, and procedures to ensure that the requirements are satisfied. The strategy for achieving SRS waste management objectives is as follows:

- Attempt to identify a method for disposing of the waste before it is generated
- Reduce/minimize waste generation
- Recycle/reuse generated waste as much as possible
- Segregate waste at the generation point in a manner that prevents cross-contamination
- Treat the waste to minimize its mobility and impact to the environment before final disposal
- Dispose of generated waste in monitored repositories

9.4 RADIOACTIVE AND HAZARDOUS WASTE STREAMS AND SOURCES

The Saltstone Facility is a waste management facility, receiving liquid waste for processing and disposition in a solid waste form within Saltstone Facility disposal units. As part of these liquid waste processing operations, some amounts of waste that cannot be disposed in the SDUs may be generated, primarily consisting of job control waste and wastes from maintenance activities. Such wastes may be radioactive, hazardous, or mixed. The Saltstone Facility maintains such waste generation to a minimum, consistent with SRS waste management goals.

Small amounts of gaseous effluent and contamination may be generated from the Saltstone Facility during processing in the production area and in the SDUs. The gaseous effluent which gradually collects in the process tanks and piping is removed by the Facility and SSRT PVVS after being passed through HEPA filters. The gaseous effluent which gradually collects in the SDUs releases to the atmosphere through the SDU passive vents (with HEPA filters as needed) by passive breathing or may be removed by the SDU Portable Ventilation System after being passed through the ventilation system's HEPA filter(s).

9.4.1 WASTE MANAGEMENT PROCESS

Radioactive, hazardous, and mixed waste management at the Saltstone Facility is the responsibility of the Operations organization. The Waste Certification Plan for the Liquid Waste Facilities (Ref. 6), describes the waste management program for generating, segregating, characterizing, packaging, and handling the various wastes generated within the Saltstone Facility, and this is updated as required.

The site support organization for control of radiological and hazardous materials at SRS is summarized in Chapter 8. The site support for storage and disposal of solid radiological, hazardous, and mixed wastes is the responsibility of the Solid Waste Division.

9.4.2 WASTE SOURCES AND CHARACTERISTICS

Maintenance related waste results from work on contaminated systems, such as HEPA filter replacement or work on process systems. Solid radioactive waste includes disposable contaminated protective clothing, discarded regulated tools and equipment, decontamination and survey materials, and HEPA filters.

Saltstone Facility personnel do not routinely create hazardous solid or mixed solid wastes at the facility.

The annual average volume of solid waste generated by the Saltstone Facility during normal operations is forecast to be approximately 5,500 ft^3. Waste is characterized as required by the SRS Radioactive Waste Requirements Manual, 1S (Ref. 4).

The potential for a liquid waste stream has occurred in the past due to weepage of leachate from the grout through the SDU 4 cell wall. This weepage results in wet spots in the cell walls which may have the potential to be washed into the soil by rain water. In order to prevent this from becoming a waste stream that could be released to the environment, these wet spots are

controlled by a collection trough and containment system when identified. SDUs 2, 3, 5, and 6 are composed of zero-leakage SDUs and do not require trough and collection systems.

9.4.3 WASTE HANDLING OR TREATMENT SYSTEMS

The design of the Saltstone Facility allows all process aqueous waste streams (e.g., flush and PW) to be processed along with the salt solution. This is mixed with dry materials to form saltstone.

Based on sample results, collected rainwater (i.e., sumps) may be processed along with the salt solution or discharged into the site storm drains.

Solid wastes, including radioactive, decharacterized, hazardous, and mixed job control waste and wastes from operations or maintenance activities, are packaged in appropriate containers and transported to an onsite SRS storage facility for further processing, if necessary, and subsequent disposition. Radioactive waste is placed in approved containers for disposal at the SRS Solid Waste Management Facility (E-Area). If generated, hazardous waste is drummed and shipped to an onsite SRS storage facility. Solid mixed wastes are shipped to an onsite SRS storage facility for temporary storage until final disposition is determined. Decharacterized waste may be stored and shipped to an offsite disposal facility or disposed of in SDU 1 (with SCDHEC approval).

9.5 REFERENCES

1. Preparation Guide for U.S. Department of Energy Nonreactor Nuclear Facility Documented Safety Analyses. DOE-STD-3009-94, Change Notice No. 3, U.S. Department of Energy, Washington DC, March 2006.

2. Standards/Requirements Identification Document. SRR-RP-2009-00558.

3. Compliance Assurance Manual. Procedure Manual 8B.

4. SRS Radioactive Waste Requirements Manual. Procedure Manual 1S.

5. Deleted

6. Waste Certification Plan for the Liquid Waste Facilities. Q-ESR-G-00055, Rev. 1.

SALTSTONE FACILITY

DOCUMENTED SAFETY ANALYSIS

CHAPTER 10

INITIAL TESTING, IN-SERVICE SURVEILLANCE, AND MAINTENANCE

Revision 15

July 2018

TABLE OF CONTENTS

Page

10.0 INITIAL TESTING, IN-SERVICE SURVEILLANCE, AND MAINTENANCE 10-1

10.1 INTRODUCTION 10-1

10.1.1 Objective 10-1

10.1.2 Scope 10-1

10.2 REQUIREMENTS 10-1

10.3 INITIAL TESTING PROGRAM 10-1

10.3.1 Testing of Facility Modifications 10-2

10.3.2 Testing of Equipment Modifications 10-2

10.3.3 Adequacy of Testing Activities 10-3

10.3.4 Startup Testing Activities 10-3

10.4 IN-SERVICE SURVEILLANCE PROGRAM 10-3

10.4.1 Provisions for Testing and Calibrations 10-3

10.4.2 Control and Calibration of Measuring and Test Equipment 10-4

10.4.3 Trending of Surveillance Test Results 10-4

10.4.4 Programmatic Review 10-4

10.4.5 Training of Surveillance Testing Personnel 10-5

10.5 MAINTENANCE PROGRAM 10-5

10.5.1 Maintenance Organization and Administration 10-5

10.5.2 Training and Qualification of Maintenance Personnel 10-6

10.5.3 Maintenance Facilities, Equipment, and Tools 10-6

10.5.4 Post-Maintenance Testing 10-7

10.5.5 Control and Calibration of Measuring and Test Equipment 10-7

10.5.6 Maintenance History and Trending 10-8

10.6 REFERENCES 10-9

10.0 INITIAL TESTING, IN-SERVICE SURVEILLANCE, AND MAINTENANCE

10.1 INTRODUCTION

10.1.1 OBJECTIVE

This chapter provides information on the SRS programs under which initial testing, in-service surveillance, and maintenance activities are performed and the program requirements that govern these activities in the Saltstone Facility.

10.1.2 SCOPE

This chapter provides a description of the initial testing, in-service surveillance, and maintenance programs and describes the interfaces between the Saltstone Facility and the site level programs.

The scope of this chapter includes the following:

- Facility initial testing program
- Facility in-service surveillance program
- Planned, predictive, preventive, and corrective facility maintenance programs

In those cases where policies, programs, and practices important to safe operation are described in detail in other site documents, the information is summarized in this chapter and the documents are referenced.

10.2 REQUIREMENTS

The S/RID states the codes, standards and regulations governing initial testing, in-service surveillance, maintenance policies, and program elements at the SRS (e.g., S/RID Functional Areas 9 and 10) (Ref. 1). Programmatic compliance assessments are performed against the S/RID and documented, as specified, in Compliance Assurance Manual, Procedure Manual 8B (Ref. 2). The Standards Management/Compliance Section maintains records of the programmatic compliance assessments.

The format and content satisfies the requirements of DOE-STD-3009-94 (Ref. 12).

10.3 INITIAL TESTING PROGRAM

This section summarizes the following test programs that ensure the operability of a facility or SSCs in a facility:

- Pre-operational testing for initial startup
- Post-modification testing

Section 10.3.1 contains descriptions of the initial startup of a facility/process or restart testing of a facility/process following a major modification. Section 10.3.2 covers testing following

modifications to an SSC and its related return-to-service requirements. This program can also be used to perform pre-operational testing following a major modification. Sections 10.4 and 10.5 describe the in-service surveillance and post-maintenance testing, respectively.

Procedure Manual 1Q, (Procedure 11.1) defines responsibilities for planning, performing and documenting tests (Ref. 3).

Conduct of Engineering, Procedure Manual E7, (Procedures 2.26 and 5.40) establishes the criteria for functional acceptance by testing of SRS facilities and process computer software. Off-line testing of process software is performed by Manual E7, Procedure 5.40 (Ref. 4).

Site programs on testing which are defined in Procedure Manual 1Q (Procedure 11.1), are implemented in Procedure Manual S4 (Ref. 3, 5).

10.3.1 TESTING OF FACILITY MODIFICATIONS

Assessment Manual, Procedure Manual 12Q, establishes a formalized process for the startup/restart of nuclear facilities and processes (called nuclear activity startups) at SRS and provides procedures for the uniform conduct of Readiness Self-Assessments, Operational Readiness Reviews (ORRs) and Readiness Assessments (Ref. 6). Procedures in Procedure Manual 12Q identify the activities required to accomplish nuclear activity startups based on a graded approach (Ref. 6).

Test Program for Liquid Waste, contained in Procedure Manual S4, describes the requirements for an initial startup of a facility or the restart testing program to establish uniformity and consistency in developing and implementing the test program activities (Ref. 5). The scope of Procedure Manual S4 is applicable to projects, facility modifications, or post modification testing. Development, performance, and documentation of testing for equipment, systems and processes is included in the test program. A Test Review Board, or for smaller projects, the Facility Operations Safety Committee (FOSC) provides oversite of the test program activities. Activities may include reviewing test specification plans, test procedures, major test change requests, and test summary documents (Ref. 5).

10.3.2 TESTING OF EQUIPMENT MODIFICATIONS

Procedure Manual E7 (Procedure 1.02) establishes responsibilities and activities for the configuration management process for controlling changes to SSCs and their associated documentation at SRS facilities (Ref. 4). Section 17.4.2 provides more details on Configuration Management (CM). Among the CM requirements are requirements for modifying the configuration of a system and the subsequent testing of that modification prior to release for operation.

Liquid Waste Organization Administrative Procedures, Procedure Manual S4, describes the program utilized to perform testing of modifications prior to release for operation (Ref. 5). This manual describes the LW test program, test procedure preparation, conduct of testing, and required qualification of test personnel. This test program methodology is also applied to facility restart activities.

10.3.3 ADEQUACY OF TESTING ACTIVITIES

Several elements of the initial testing, post-modification testing, in-service surveillance, and maintenance programs ensure that the Saltstone Facility is managed safely from the standpoint of testing facility equipment prior to facility startup and prior to use of the equipment following maintenance or modifications. These program elements are described in other sections of this chapter, as indicated in the following paragraphs.

As discussed in Section 10.3.1, Procedure Manual S4 defines the requirements for testing equipment prior to startup/restart of a facility (Ref. 5). Procedure Manual S4 provides detailed descriptions of the different programmatic areas considered, and the responsibilities of organizations involved. Procedure Manual 1Q (Procedure 11.1) specifies the training and qualification requirements for personnel involved in the startup/restart process (Ref. 3).

Section 10.3.2 discusses modification of a system or a piece of equipment. Procedure Manual E7 (Procedure 1.02) describes the detailed requirements in place to control the configuration of SRS SSCs (Ref. 4). Chapter 4 identifies safety-related SSCs in the Saltstone Facility that require CM.

Surveillance testing of SSCs and testing following routine maintenance is discussed in Sections 10.4 and 10.5, respectively. These sections also discuss training and qualification of personnel, responsibilities of personnel, and the SRS guidance governing these testing programs.

10.3.4 STARTUP TESTING ACTIVITIES

Startup activities are conducted in accordance with the requirements of the QAP described in the Quality Assurance Manual 1Q (Ref. 3). Details of the activities, including responsibilities, test plan, test procedures, control of testing, documentation of test results, tracking test deficiencies, and qualification of test personnel are described in Procedure Manuals 1Q and S4 (Ref. 3, 5).

10.4 IN-SERVICE SURVEILLANCE PROGRAM

In-service surveillance and inspections at the Saltstone Facility are performed in accordance with Procedure Manuals S4 and 1Q (Ref. 5, 3). These require periodic inspections, ranging from management walkthroughs to detailed facility inspections, to ensure that proper conditions are maintained to support safe and reliable facility operations. This section addresses implementation of the requirements of Conduct of Maintenance, Procedure Manual 1Y, in the Saltstone Facility (Ref. 8).

10.4.1 PROVISIONS FOR TESTING AND CALIBRATIONS

Surveillance, inspection, and testing activities verify that the equipment needed for the safe and reliable facility operation performs within the required limits and that the functional tests of the installed equipment and/or systems are conducted and documented as part of the surveillance program. Abnormalities found during these surveillances are reported immediately to management. The effectiveness of the maintenance surveillance program is evaluated,

periodically, by facility management and the results of the evaluations are used to identify any necessary program improvements.

Procedure Manual 1Q provides the program requirements and responsibilities for planning, performing, and documenting the Saltstone Facility tests (Ref. 3). Consistent with the above-stated requirements, Procedure Manual 1Q specifies the type and extent of test controls to be applied to systems, subsystems, components, and items, based on the functional classification assigned to it (Ref. 3). The SSCs covered in the Surveillance Inspection program are identified in Chapter 4. The surveillance testing and calibration of TSR related components are identified in the TSRs. Management of the surveillance test program is discussed in Procedure Manual S4 (Ref. 5).

10.4.2 CONTROL AND CALIBRATION OF MEASURING AND TEST EQUIPMENT

Section 10.5.5 discusses the control and calibration of M&TE, as well as IPI. The requirements of Procedure Manual 1Q also apply to M&TE and IPI used for in-service surveillance, and are detailed in Procedure Manual 1Q, Procedures QAP 12-1 and 12-2 (Ref. 3).

10.4.3 TRENDING OF SURVEILLANCE TEST RESULTS

Trending data is acquired as part of the maintenance surveillance program for long-term performance evaluations. Section 10.5.6 discusses trending of historical data obtained from various sources, including surveillance tests. The guidelines described in that section also apply to trending of surveillance test data for various uses in improving the maintenance program.

10.4.4 PROGRAMMATIC REVIEW

Procedure Manual 1Y states that inspections, audits, reviews, investigations, and self-assessments are necessary for an effective maintenance program (Ref. 8). It recommends that senior managers periodically review and assess elements of the maintenance program to assist line managers and supervisors in identifying and correcting program deficiencies. Section 17.4 discusses formal self-assessment and facility programmatic review processes in more detail.

Procedure Manual 1Q provides guidance for conducting inspections, including In-Service Inspections (ISIs), of specified SSCs (Ref. 3). An ISI is an inspection performed on operable equipment to verify that characteristics of an item remain in compliance with specified requirements. The cognizant technical function and cognizant quality function for a particular facility are responsible for evaluating the processes, activities and items for which they are responsible and for establishing the level, extent, and acceptance criteria for inspections. The basis for the assignment, level, and intensity of inspections is directly related to functional classifications or design document requirements.

The ISI program at the Saltstone Facility is called the Structural Integrity Program. This program provides for the conduct of ISI of critical SSCs and their supports. The critical SSCs covered in the Structural Integrity Program are identified in Chapter 4. The surveillance testing and calibration of TSR related components are identified in the TSRs. Structural Integrity is a

process to determine those inspections or measurements that need to be performed on the SSCs to ensure that they will perform their intended design functions under operational and accident conditions. This program provides reasonable assurance that the evidence of structural or functional degradation during services is detected to permit corrective action before the function of the SSC is compromised. The Structural Integrity Program is also a predictive maintenance activity that complements the overall NMMP. Procedure Manual S4 defines the requirements and responsibilities for initiating, preparing, reviewing, approving, issuing, and controlling Structural Integrity datasheets, as well as, reporting and trending the resultant information (Ref. 5).

ISIs are planned by the organization performing the inspection and are approved by the Design Authority and the cognizant quality function.

10.4.5 TRAINING OF SURVEILLANCE TESTING PERSONNEL

Section 12.4 discusses training of maintenance personnel. The requirements of Procedure Manual 4B described in that section also apply to training conducted for in-service surveillance personnel (Ref. 10).

10.5 MAINTENANCE PROGRAM

The NMMP Description Document is the single site document that identifies the policies, programs, procedures, and processes that provide the requirements for planning and executing maintenance activities to ensure SSCs are maintained and operated within the approved safety basis for each division and facility (Ref. 11). Maintenance activities at the Saltstone Facility are conducted in accordance with Procedure Manual 1Y (Ref. 8), which provides implementing procedures for sitewide consistency and is controlled by the NMMP. The maintenance facilities are located in Building 210-Z. This section addresses the Saltstone Facility implementation of the requirements in Procedure Manual 1Y (Ref. 8), as described in the NMMP Description Document (Ref. 11).

10.5.1 MAINTENANCE ORGANIZATION AND ADMINISTRATION

The organization and administration of the maintenance function ensures that a high level of performance in maintenance is achieved through effective implementation and control of maintenance activities. This goal is achieved primarily by establishing written policies, procedures, standards for maintenance, and by periodically observing and assessing performance.

Procedure Manuals 1Y and S4 establish the requirements and responsibilities for the maintenance organization and administration of the Saltstone Facility maintenance program (Ref. 8, 5). It is a primary responsibility of Maintenance Management to ensure the implementation of site and business unit policies that affect the maintenance organization. Maintenance organization procedures support contractor management and facility maintenance policies. Procedure Manual 1Y defines the responsibilities for implementing these policies, including the responsibilities of maintenance personnel (Ref. 8). Maintenance personnel must clearly understand their authority, responsibility, accountability, and interfaces with other

groups. Procedures or other definitive documents specify policies that are used to guide maintenance organization activities. These documents also specify the types of controls necessary to implement maintenance policies.

Procedure Manuals 1Y and S4 describe the Saltstone Facility maintenance program and state the organization, responsibilities, interface, and qualification requirements of the Saltstone Facility maintenance department (Ref. 8, 5). The Saltstone Facility Maintenance organization provides support to the Facility Manager (see Section 17.3.2). The Saltstone Facility Maintenance organization provides the following:

- Various aspects of maintenance of the Saltstone Facility facilities and ensuring that the training and qualification program adequately supports the requirements of the department, the site, and the DOE
- Maintaining the Saltstone Facility in a safe, quality, cost effective manner; ensuring compliance with site programs, industry standards, and applicable DOE Orders consistent with Saltstone Mission Statements
- Monitoring and ensuring that maintenance activities comply with the TSRs, existing procedures, applicable regulations, policies, and programs

The Work Control System provides the programmatic method of work control within the Saltstone Facility (Ref. 8).

10.5.2 TRAINING AND QUALIFICATION OF MAINTENANCE PERSONNEL

The maintenance manager is responsible for helping to select high-quality personnel for maintenance responsibilities. The manager is involved in defining entry-level criteria and in screening new personnel. A maintenance training and qualification program is required by Procedure Manual 4B to develop and maintain the knowledge and skills needed by maintenance personnel to effectively perform maintenance activities (Ref. 10). The maintenance manager is directly involved in training maintenance personnel.

The site training organization implements maintenance training programs that meet the intent of established industrial guidelines and that address specific company and facility needs. These programs are supported and guided by the maintenance organization.

On-shift training is a formal part of the maintenance-training program. Section 12.4 provides further information regarding on-shift training, training program development, and requirements.

10.5.3 MAINTENANCE FACILITIES, EQUIPMENT, AND TOOLS

Adequate maintenance facilities and equipment are available to support the entire range of facility operations and maintenance training activities. To determine the adequacy of maintenance facilities, equipment, and tools, assessments of the maintenance facilities are performed in accordance with the requirements of SRR Assessment Performance Objectives & Criteria (Ref. 9).

10.5.4 POST-MAINTENANCE TESTING

Post-maintenance testing is performed to verify that components and systems are capable of performing their intended function when returned to service following maintenance and to ensure that the original deficiency is corrected and that no others are created. A post-maintenance test is performed after selected corrective maintenance activities and after some NMMP activities. The test performed is commensurate with the maintenance work performed and the importance of the equipment for safe and reliable operations. The post-maintenance testing program includes the following (Ref. 8):

- Determining post-maintenance test requirements
- Determining the scope of post-maintenance testing to ensure that appropriate levels of testing are applied to facility equipment and that redundant testing is minimized
- Tracking the status of equipment that has undergone maintenance to ensure that all testing is completed prior to the equipment being returned to service
- Conducting proper post-maintenance tests, documenting the results, and verifying that the resulting data meet acceptance criteria

Test requirements and acceptance criteria are obtained from the following sources (Procedure Manual 1Y, Ref. 8):

- Plant modification traveler
- Temporary modification package
- Selected maintenance activities and post-maintenance tests
- Maintenance history
- Vendor manuals
- Facility operations
- Cognizant technical function and other sources

Procedure Manual 1Q requires that a program be established to control post-maintenance testing, particularly for cases where more than one group is involved in the testing (Ref. 3). At the Saltstone Facility, Facility Operations is responsible for maintaining the status of incomplete, post-maintenance testing and for coordinating post-maintenance testing performance. The operations organization reviews the completed post-maintenance test results and approves the Work Order to document the satisfactory completion of the maintenance/modification work.

10.5.5 CONTROL AND CALIBRATION OF MEASURING AND TEST EQUIPMENT

Procedure Manual 1Q requires that a program for the control and calibration of M&TE should be instituted to ensure the accurate performance of facility instrumentation and equipment for testing, calibration, and repairs (Ref. 3). M&TE includes all devices or systems used to inspect, test, calibrate, measure, or troubleshoot in order to control or acquire data for verifying the conformance of an instrument or piece of equipment to specified requirements. M&TE is calibrated and controlled in accordance with the requirements of Procedure Manual 1Q (Ref. 3).

10.5.6 MAINTENANCE HISTORY AND TRENDING

An equipment repair history and trending program has been established for selected equipment and is maintained to provide historical information for maintenance planning and to support the maintenance and performance trending analysis of facility systems and components (Procedure Manual 1Y, Ref. 8). The equipment repair history is used to support maintenance activities, upgrade maintenance programs, optimize equipment performance, and improve equipment reliability. The equipment history program allows the retrieval of information on equipment maintenance and performance in order to improve facility reliability. This data, combined with operating experience at similar facilities, operating logs and records, and facility performance monitoring data, are used in analyzing trends and failures in equipment performance and in making adjustments to the maintenance program.

Maintenance trending, the process used to evaluate recurring maintenance problems and to propose corrective actions for maintenance-related problems, is applied to selected equipment to ensure that a systematic analysis methodology is used to determine and correct root causes of problems, unplanned events and occurrences related to maintenance activities.

Procedure Manual 1Y describes the Maintenance History program used at the Saltstone Facility for the collection of maintenance documentation and data, for generation of historical information to support maintenance work planning, and for the trending of systems and components (Ref. 8).

10.6 REFERENCES

1. Standards/Requirements Identification Document (S/RID). SRR-RP-2009-00558.
2. Compliance Assurance Manual. Procedure Manual 8B.
3. Quality Assurance Manual. Procedure Manual 1Q.
4. Conduct of Engineering. Procedure Manual E7.
5. Liquid Waste Organization Administrative Procedures. Procedure Manual S4.
6. Assessment Manual. Procedure Manual 12Q.
7. Deleted
8. Conduct of Maintenance Manual. Procedure Manual 1Y.
9. SRR Assessment Performance Objectives & Criteria. http://bnet4.srs.gov/saNet/Home.aspx?company=SRR.
10. Training and Qualification Program Manual. Procedure Manual 4B.
11. Nuclear Maintenance Management Program (NMMP) Description Document. SRNS-C-1600-2011-00001.
12. Preparation Guide for U.S. Department of Energy Nonreactor Nuclear Facility Documented Safety Analyses. DOE-STD-3009-94, Change Notice No. 3, U.S. Department of Energy, Washington DC, March 2006.

SALTSTONE FACILITY

DOCUMENTED SAFETY ANALYSIS

CHAPTER 11

OPERATIONAL SAFETY

Revision 15

July 2018

TABLE OF CONTENTS

Page

11.0 OPERATIONAL SAFETY 11-1

11.1 INTRODUCTION 11-1

11.2 REQUIREMENTS 11-1

11.3 CONDUCT OF OPERATIONS 11-1

11.4 FIRE PROTECTION 11-2

11.4.1 Fire Hazards 11-3

11.4.2 Fire Protection Program and Organization 11-3

11.4.3 Combustible Loading Control 11-3

11.4.4 Fire Fighting Capabilities 11-4

11.4.5 Fire Fighting Readiness Assurance 11-4

11.5 REFERENCES 11-5

11.0 OPERATIONAL SAFETY

11.1 INTRODUCTION

The objective of this chapter of the Saltstone Facility DSA discusses the general aspects of operational safety and fire protection. This chapter relies heavily upon the information provided in the Fire Protection Manual 2Q (Ref. 2) and the Conduct of Operations Manual 2S (Ref. 3). The information specific to the Saltstone Facility that is not discussed in these site procedure manuals is detailed in this chapter.

The scope of this chapter includes the following:

- Identification of aspects of the Conduct of Operations Program
- Integrated summary of the main features of the Conduct of Operations Program
- Description of the Fire Protection Program

Although general knowledge of and compliance with the Conduct of Operations and Fire Protection Programs are acknowledged, no specific attribute of these programs is credited in the safety analysis as documented in Chapter 3.

11.2 REQUIREMENTS

The S/RIDs (Ref. 4) state the codes, standards, and regulations governing operational safety and Fire Protection Program elements for the SRS. Programmatic compliance assessments are performed against the S/RIDs and documented as specified in the Compliance Assurance Manual 8B (Ref. 5).

The format and content of this chapter satisfies the requirements of DOE-STD-3009-94 (Ref. 1).

11.3 CONDUCT OF OPERATIONS

The Saltstone Facility follows the Conduct of Operations Program as discussed in the Conduct of Operations Manual 2S (Ref. 3).

Listed below are the topical areas specified by DOE-STD-3009-94 (Ref. 1) and a reference (within parentheses) (if applicable) to the procedure or chapter of the Conduct of Operations Manual 2S (Ref. 3) in which these topics are discussed:

- Shift Routines and Operating Practices (Procedure 4.4)
- Control Area Activities (Procedure 5.3)
- Communications (Procedure 2.1)
- Control of On-Shift Training (Procedure 3.2)
- Control of Equipment and System Status (Procedure 5.5)

- Lockouts and tagouts (Procedure 5.9 and Reference 8)
- Independent Verification Practices (Procedure 5.7)
- Logkeeping (Procedure 2.4)
- Operations Turnover (Procedure 4.1)
- Required Reading (Procedure 3.1)
- Timely Orders to Operators (Procedure 4.5)
- Operator Aid Postings (Procedure 5.10)
- Equipment and Piping Labeling (Procedure 5.11)
- Operations Aspects of Facility Chemistry and Unique Processes

  Operational monitoring of Saltstone Facility-unique data and parameters ensures that parameters are properly maintained. Monitoring parameters is important to verifying system operation in accordance with design expectations. In order to enhance proper process control of systems, operations personnel must have an understanding of Saltstone Facility processes and must effectively coordinate operations activities with DWPF/Saltstone Engineering.

  The Facility Manager is responsible for ensuring that all operations-specific responsibilities are defined through approved operations procedures and that specific process training is appropriately addressed. The manager shall also ensure that process requirements within the facility are properly identified and implemented.

For on-shift training, additional requirements and guidance are given in the Training and Qualification Program Manual 4B (Ref. 6). The Industrial Hygiene Manual 4Q (Ref. 7) and the Employee Safety Manual 8Q (Ref. 8) and Procedure 2.06 of the Conduct of Engineering Manual E7 (Ref. 9) provide additional requirements and guidance for the control of equipment and systems status. Chapter 8 of the Employee Safety Manual also provides requirements for the labeling of equipment and piping that contain hazardous material.

Procedure 5.9 of the Conduct of Operations Manual 2S (Ref. 3) provides requirements for the control of tags and references Procedure 32 of Procedure Manual 8Q for lockout and tagout requirements. This procedure also provides requirements for independent verifications involving hazardous energy control.

11.4 FIRE PROTECTION

The Savannah River Remediation Fire Protection Program Plan, F-PRP-G-00001 (Ref. 20), has been established in accordance with the Fire Protection Program Manual 2Q (Ref. 2) for the Saltstone Facility to ensure that the objectives of the Fire Protection Program are met. The Fire Protection Program has been established to ensure that objectives related to safety are met by ensuring compliance with the following requirements in Management Policy (MP) 5.40 of the Management Policies Manual 1-01 (Ref. 10):

- Minimize the likelihood of the occurrence of a fire-related event
- Minimize the consequences of a fire-related event affecting the public, workers, environment, property, and missions
- Provide a level of fire safety protection consistent with the Highly Protected Risk class of industrial insurable risks

11.4.1 FIRE HAZARDS

The Saltstone Facility consists of numerous buildings, structures, and waste disposal or storage sites. In general, the fire hazards are low, and controls are in place to maintain the facilities in a fire-safe condition. The Fire Hazards Analysis provides an assessment of fire events that could potentially pose significant nuclear, environmental, or life safety hazards to facility personnel or the public (Ref. 11, 12, 15, 16, 19).

11.4.2 FIRE PROTECTION PROGRAM AND ORGANIZATION

The Saltstone Facility Fire Protection Program is implemented through the Savannah River Remediation Fire Protection Program Plan, F-PRP-G-00001 (Ref. 20) and the Fire Protection Program, Procedure Manual 2Q (Ref. 2). Specific responsibilities in the implementation of the site Fire Protection Program and the direction and guidance for the Fire Protection Program requirements for the Saltstone Facility are discussed in F-PRP-G-00001 (Ref. 20).

Listed below are elements of the Fire Protection Program that are specified by Subsection 11.4.2 of DOE-STD-3009-94 (Ref. 1) and a reference (within parentheses) to the implementing site procedures or policies:

- Organization that administers the Fire Protection Program (MP 5.40, Ref. 10)
- Conceptual approach to fire and related hazard prevention (MP 5.40, Ref. 10)
- Means used to identify facility fire and related hazards (Ref. 2)

The Saltstone Facility performs fire protection reviews to ensure that modifications or work practices do not reduce the level of fire protection required by DOE Orders, as stated in Procedure Manual 2Q (Ref. 2).

11.4.3 COMBUSTIBLE LOADING CONTROL

All SRS facilities, including the Saltstone Facility, employ guidelines specified in the Fire Protection Program as described in Section 5 of the Fire Protection Program Manual 2Q (Ref. 2), which includes the following:

- Facility fire prevention and life safety inspections
- Storage and handling of combustible or flammable liquids, compressed gases, and aerosol products
- Fire watch and fire patrol

- Control of hot work and hot work permits
- Control of combustible materials

Combustible loading control requirements are implemented consistent with Manual 2Q Procedure 5.5 (Ref. 18).

11.4.4 FIRE FIGHTING CAPABILITIES

The criteria for basic training and personnel qualifications for fire fighters/roving fire watches, special precautions taken for fire fighting in radiological environments, fire prevention inspection programs, fire safety drills and Fire Protection Program, and record keeping are addressed by Procedure Manual 2Q (Ref. 2).

Specific information on fire fighting equipment for the Saltstone Facility is in the Fire Department Operating Standards, Procedure Manual 2Q2 and the Fire Department Emergency Response Baseline Needs Assessment, F-TRT-G-00010 (Ref. 13, 17).

11.4.5 FIRE FIGHTING READINESS ASSURANCE

The Saltstone Facility follows the firefighting readiness assurance guidance of the Fire Protection Program as described in the Fire Protection Program Manual 2Q (Ref. 2), which covers the following topics:

- Fire Prevention Inspection Program
- Fire Safety Drills and Exercises
- Fire Protection Program Reports and Recordkeeping Practices

Facility specific procedures provide for a fire prevention inspection program and associated record keeping requirements.

11.5 REFERENCES

1. Preparation Guide for U.S. Department of Energy Nonreactor Nuclear Facility Documented Safety Analyses. DOE-STD-3009-94, Change Notice No. 3, U.S. Department of Energy, Washington DC, March 2006.
2. Fire Protection Program. Procedure Manual 2Q.
3. Conduct of Operations Manual. Procedure Manual 2S.
4. Standards/Requirements Identification Document. SRR-RP-2009-00558.
5. Compliance Assurance Manual. Procedure Manual 8B.
6. Training and Qualification Program Manual. Procedure Manual 4B.
7. Industrial Hygiene Manual. Procedure Manual 4Q.
8. Employee Safety Manual. Procedure Manual 8Q.
9. Conduct of Engineering and Technical Support. Procedure Manual E7.
10. Management Policies. Manual 1-01.
11. Fire Hazards Analysis For Saltstone Production Facility. F-FHA-Z-00002, Rev. 9.
12. Fire Hazards Analysis For Saltstone Administration Building 704-Z (U). F-FHA-Z-00001, Rev. 5.
13. Fire Department Operating Standards. Procedure Manual 2Q2.
14. Deleted
15. Fire Hazards Analysis for Saltstone Disposal Facility. F-FHA-Z-00003, Rev. 2.
16. Project Fire Hazards Analysis for Salt Disposal Unit 4 Stabilization. F-PFHA-Z-00004, Rev. 0.
17. Fire Department Emergency Response Baseline Needs Assessment. F-TRT-G-00010, Rev. 1.
18. Fire Protection Program. Procedure Manual 2Q, Procedure 5.5, Control of Combustible Materials.
19. Fire Hazards Analysis for Saltstone Disposal Unit (SDU) 451-006Z. F-FHA-Z-00004, Rev. 2.
20. Savannah River Remediation Fire Protection Program Plan. F-PRP-G-00001, Rev. 1.

SALTSTONE FACILITY

DOCUMENTED SAFETY ANALYSIS

CHAPTER 12

PROCEDURES AND TRAINING

Revision 14

December 2017

TABLE OF CONTENTS

Page

12.0 PROCEDURES AND TRAINING 12-1

12.1 INTRODUCTION 12-1

12.2 REQUIREMENTS 12-1

12.3 PRODEDURE PROGRAM 12-1

12.3.1 Development of Procedures 12-1

12.3.2 Maintenance of Procedures 12-1

12.4 TRAINING PROGRAM 12-2

12.4.1 Development of Training 12-2

12.4.2 Maintenance of Training Programs 12-3

12.4.3 Modification of Training Materials 12-3

12.5 REFERENCES 12-4

12.0 PROCEDURES AND TRAINING

12.1 INTRODUCTION

This chapter of the Saltstone Facility DSA discusses general aspects of the process by which the technical content of procedures and training is developed, maintained, modified, verified, and validated and the mechanisms used to identify and correct technical or Human Factors (HF) deficiencies in procedures and training programs. This chapter relies heavily upon the information provided in the Conduct of Operations Manual 2S (Ref. 2), the LW Procedure Systems Administrative Procedures Manual, S25 (Ref. 3), and the Training and Qualification Program Manual 4B (Ref. 4) and refers to these manuals as necessary. The procedures and training processes, as described in these manuals, have been developed and implemented through sitewide programs.

12.2 REQUIREMENTS

The S/RIDs (Ref. 5) state the codes, standards, and regulations governing the procedures and training elements of the SRS. Programmatic compliance assessments are performed against the S/RIDs and documented as specified in the Compliance Assurance Manual 8B (Ref. 6).

The format and content of this chapter satisfies the requirements of DOE-STD-3009-94 (Ref. 1).

12.3 PROCEDURE PROGRAM

The Saltstone Facility follows the Liquid Waste procedure program as discussed in Procedures Manual S25 (Ref. 3). The SRS safety management policy is that procedures are to promote safe and efficient operations.

12.3.1 DEVELOPMENT OF PROCEDURES

The Saltstone Facility follows the development of procedures as discussed in the Conduct of Operations Manual 2S (Ref. 2) and Procedures Manual S25 (Ref. 3). The following is a list of processes identified in Subsection 12.3.1 of DOE-STD-3009-94 (Ref. 1) and a reference (within parentheses) to the site document that describes the SRS process for the preparation, verification, and validation of procedures:

- Procedure preparation (Reference 3 and Procedure 1.1A of Reference 2)
- Procedure verification (Procedure 1.1A of Reference 2)
- Procedure validation (Procedure 1.1A of Reference 2)

12.3.2 MAINTENANCE OF PROCEDURES

The Saltstone Facility follows the maintenance of procedure program as discussed in the Conduct of Operations Manual 2S (Ref. 2) and Management Requirements and Procedures Manual 1B (Ref. 7). The following is a list of provisions identified in Subsection 12.3.2 of

DOE-STD-3009-94 (Ref. 1) and a reference (within parentheses) to the site document that describes the SRS provisions:

- Documenting procedures and procedure reviews (Procedure 1.1A of Reference 2)
- Procedure Control and Dissemination (Procedure 3.26 of Reference 7)
- Procedure training and coordination (Section 3 of Reference 2)

12.4 TRAINING PROGRAM

The mission of the training program at the Saltstone Facility is to develop programs that ensure Saltstone Facility operations are conducted in accordance with the highest standards of safety, health, and environmental protection. This mission is accomplished by ensuring that the personnel performing operations at the Saltstone Facility meet the qualification and certification requirements for their positions, and are trained in the performance and requirements of their duties.

DOE Order 426.2 provides the requirements for establishing performance-based training programs and the personnel qualification requirements for DOE nonreactor nuclear facilities (Ref. 8). This Order is implemented at the Saltstone Facility by the Training and Qualification Program Manual, Procedure Manual 4B (Ref. 4).

12.4.1 DEVELOPMENT OF TRAINING

The Saltstone Facility training development program follows the Training and Qualification Manual 4B (Ref. 4). The following is a list of technical content identified in Subsection 12.4.1 of DOE-STD-3009-94 (Ref. 1) and a reference (within parentheses) to the site document that describes the SRS training requirements:

- Conduct of normal, abnormal, and emergency operations (Chapter 3 of Reference 2)
- On-shift and classroom training (Chapter 3 of Reference 2)
- Criticality (not applicable to the Saltstone Facility)
- Radioactive and hazardous material protection (Reference 9 and Chapter 6 of Reference 13)
- Surveillance testing and maintenance (Ref. 4)
- Fire protection (Ref. 11)
- Quality assurance (Ref. 10)
- Emergency preparedness (Ref. 12)

In addition, the Training and Qualification Program Manual 4B (Ref. 4) discusses the analysis of training requirements and the design and development of training.

12.4.2 MAINTENANCE OF TRAINING PROGRAMS

Training programs must be continually reviewed and revised to ensure that the training programs reflect actual site conditions and current procedures, and that the necessary coordination is done before introducing new training programs or changes in procedures covered by training programs. The responsibilities of the Training Managers Committee and Training Oversight Committee, the training oversight and assessment program, and the maintenance of training records for the Saltstone Facility are prescribed by the Procedure Manual 4B (Ref. 4).

12.4.3 MODIFICATION OF TRAINING MATERIALS

The Procedure Manual 4B describes the methods used to identify and correct technical or HF deficiencies in the Saltstone Facility training programs, including operating experience, personnel examinations, and lessons learned from other facilities (Ref. 4). The Procedure Manual 4B gives details on the incorporation of changes to training materials, administration of training development requirements, and evaluation of training effectiveness.

12.5 REFERENCES

1. Preparation Guide for U.S. Department of Energy Nonreactor Nuclear Facility Documented Safety Analyses. DOE-STD-3009-94, Change Notice No. 3, U.S. Department of Energy, Washington DC, March 2006.
2. Conduct of Operations Manual. Procedure Manual 2S.
3. LW Procedure Systems Administrative Procedures Manual. Procedures Manual S25.
4. Training and Qualification Program Manual. Procedure Manual 4B.
5. Standards/Requirements Identification Document. SRR-RP-2009-00558.
6. Compliance Assurance Manual. Procedure Manual 8B.
7. Management Requirements and Procedures. Procedure Manual 1B.
8. Personnel Selection, Training, Qualification, and Certification Requirements for DOE Nuclear Facilities. DOE Order 426.2 Change 1, U.S. Department of Energy, Washington DC, July 2013.
9. Industrial Hygiene Manual. Procedure Manual 4Q.
10. Quality Assurance Manual. Procedure Manual 1Q.
11. Fire Protection Program. Procedure Manual 2Q.
12. SRS Emergency Plan. SCD-7.
13. Radiological Control Manual. Procedure Manual 5Q.
14. Deleted

SALTSTONE FACILITY

DOCUMENTED SAFETY ANALYSIS

CHAPTER 13

HUMAN FACTORS

Revision 15

July 2018

TABLE OF CONTENTS

Page

13.0 HUMAN FACTORS 13-1
13.1 INTRODUCTION 13-1
13.1.1 Objective 13-1
13.1.2 Scope 13-1
13.2 REQUIREMENTS 13-2
13.3 HUMAN FACTORS PROCESS 13-2
13.4 IDENTIFICATION OF HUMAN-SYSTEM INTERFACES 13-3
13.4.1 Monitoring SSC Performance 13-4
13.4.2 Response to out-of-specification readings 13-4
13.4.3 Placing the Facility in Safe Shutdown 13-4
13.5 OPTIMIZATION OF HUMAN-SYSTEM INTERFACES 13-5
13.5.1 Credited Operator Actions 13-5
13.5.2 Scenario Defining Operator Action 13-6
13.6 REFERENCES 13-8

13.0 HUMAN FACTORS

13.1 INTRODUCTION

13.1.1 OBJECTIVE

This chapter describes the influence of HF on the safety analysis for the Saltstone Facility.

13.1.2 SCOPE

Human actions are relied on for certain controls and operations that affect the safety of the Saltstone Facility. Human actions affecting safety are those associated with monitoring the facility parameters, responding to alarms or out-of-limit parameters, and placing the facility in a safe condition.

A graded approach to HF was applied for this DSA. The HF evaluation performed pertains only to the Human-System Interfaces (HSI) associated with achieving the safety function of the safety SSCs. The unmitigated scenarios discussed in Chapter 3 also rely on operators to respond to various indications to define the scenarios. These actions have been qualitatively evaluated in this chapter.

Additionally, human performance issues were qualitatively assessed during implementation of DOE-STD-1186-2004 (Ref. 12) as discussed in the applicable portions of Section 4.5. This section evaluates the SACs identified by the hazards analysis.

The SDU 3 and 6 Fill Height SACs rely on visual observation of SDU operations (typically by use of the CCTV) and use of forced ventilation for SDUs. Actions required by this SAC include stopping the flow of dry premix feeds and salt solution to the mixer and performance of ventilations of the SDUs. The actions to perform the ventilations may be required to be started immediately, but can be completed using other forced ventilation systems if the SDU Portable Ventilation System is not available. For SDU 6, an averaging calculation is required when approaching the SDU 6 Maximum Grout Height. Additionally, use of a portable gas monitor may be required if SDU 6 exceeds the SDU 6 Maximum Grout Height.

The Severe Weather Response Program SAC relies on operators responding to a notification of a tornado warning or high wind warning from the SRSOC. Actions required by this SAC include stopping the SSRT and SFT transfer pumps (or isolating the SSRTs and SFT discharge paths) and securing the SSRT agitator(s).

The Event Response Program SAC relies on operators responding to a Seismic Event. Actions required by this SAC include securing the SSRT agitator(s). These SAC actions are typically performed from the Saltstone Facility Control Room but may be performed in the field (e.g., power disconnects) and are discussed in Section 13.5.1.

13.2 REQUIREMENTS

The Saltstone Facility predates DOE requirements for identifying and applying Human Factors Engineering (HFE) considerations to the design and operation of DOE facilities. However, many of the current HFE criteria (human dimension considerations, environmental considerations, normal and emergency lighting, noise, etc.) were contained within other national consensus standards such as OSHA and NFPA. These criteria were considered during the design processes at the SRS and have been validated during years of successful operation. The Saltstone Facility has been in operation for a sufficient number of years that drills, training, assessments, and other activities have identified the following:

- Optimum instrumentation
- Provisions for communications
- Operational aids
- Layout and design of instrumentation and controls
- Standardized labeling
- Improvements in work environment and other factors bearing on HSI

The S/RID (Ref. 1) specifies the codes, standards, and regulations governing the operational safety policies and elements of SRS HFE activities (e.g., S/RID Functional Area 19). Programmatic compliance assessments are performed against the S/RID and documented as specified in Compliance Assurance Manual, Procedure Manual 8B (Ref. 2). The Standards Management/Compliance Section maintains records of the programmatic compliance assessments.

All current design activities are required to follow Design Standards (Ref. 3).

The format and content of this chapter satisfies the requirements of DOE-STD-3009-94 (Ref. 15) and 10CFR830 (Ref. 16).

13.3 HUMAN FACTORS PROCESS

References 5 through 10 specify requirements for the inclusion and assessment of HFE in the design, startup, operation, and maintenance of SSCs. These requirements are reflected in site procedures for labeling, annunciators, communication, status boards and procedures as discussed in Chapters 11 and 12. HF aspects have been verified to be in accordance with site and facility procedures through facility walkdowns and surveillances during the years of operation.

Based on the operator actions and controls outlined in Chapters 4 and 5, facility staffing requirements have been developed accounting for the facility design and the event responses required by the DSA. The facility minimum staffing requirements are identified in Chapter 5 and are carried forward into the TSRs.

13.4 IDENTIFICATION OF HUMAN-SYSTEM INTERFACES

Chapters 3 and 4 identify the SDU grout height indicators as a supporting SSC for the Maximum Grout Height which contains an HSI. The grout height indicators, together with the CCTV System (typically) are utilized during the production of grout. The initial verification of cell grout height is performed by visual observation (CCTV may be used). Verifications of grout height during grout production operations or after shutdown is verified by visual observation or by calculating the final grout height using run time since the last visual observation of grout height and the bounding grout pump flow rate or the actual processing rate, if available. When the grout reaches the Maximum Grout Height, the salt solution and dry premix feeds to the SDU are shutdown from the Control Room. As discussed in Chapters 3, 4, and 5, grout level above the Maximum Grout Height can lead to an increased release of flammable gases in the SDUs and may pose a flammability hazard. The required action is to stop the flow of salt solution and dry premix feeds to the mixer in order to maintain the maximum possible vapor space and prevent additional material from entering the cell.

In order to ensure reliability of grout height monitoring from the control room, the CCTV System is under the NMMP.

Chapters 3 and 4 also identified the DCS, valves, and power disconnects as means to secure transfers from the SSRTs and SFT (or isolate the SSRTs and SFT discharge paths) and the SSRT agitator(s) upon a tornado warning or high wind warning, or to secure SSRT agitator(s) following a Seismic Event. As discussed in Chapters 3, 4, and 5, failure to secure the SSRT agitator(s) can lead to an SSRT explosion and failure to secure transfers from the SSRTs and SFT (or isolate the SSRTs and SFT discharge paths) can lead to High chemical consequences from a fire in the process room. The required actions are to secure transfers from the SSRTs and SFT (or isolate the SSRTs and SFT discharge paths) and the SSRT agitator(s) upon a tornado warning or high wind warning, and secure SSRT agitator(s) following a Seismic Event.

The human actions associated with these systems can be categorized into the following types of actions:

- Monitoring of safety-related SSCs to ensure continued safe operations of the facilities,
- Response to alarms or out-of-limit process parameters to stop a given activity, restore a system to operations, or take some other corrective action(s), or
- Placing the facility in a safe condition prior to or following an NPH event.

This section evaluates the HSI that must exist to complete the above type of actions.

Additional actions are required in order to limit the maximum potential missing waste in the facility to less than 15,000 gallons. No specific HSIs are identified for these actions; however, an evaluation is provided in Section 13.5.

13.4.1 MONITORING SSC PERFORMANCE

The accident analysis credits operators with ensuring certain safety functions are being completed by monitoring the system performance. This is usually done by monitoring the system parameter or status of interest (e.g., SDU grout height, SSRT agitator(s) on/off). In the cases where the parameter is directly monitored the operators are reading a simple gauge or digital display in the units of interest for comparison. The uncertainty analysis for the grout height indicators includes allowances for any reading uncertainties.

Operators have been trained in the techniques of reading the indications. The procedures used to monitor the equipment incorporate HFE principles.

For SDU 6, an averaging calculation is required when approaching the SDU 6 Maximum Grout Height. This action would require the use of simple math by averaging the grout heights obtained from the grout height indicators at the nine (9) pour port locations.

13.4.2 RESPONSE TO OUT-OF-SPECIFICATION READINGS

Operations personnel are credited in Chapter 3 for responding to out-of-specification readings. There are multiple grout height indicators and a camera(s) which have associated response procedures in the Control Area where the indication is located for directing operator responses.

The credited responses are simple actions that the operators have been trained to complete. In the case of the grout height indication, the required action is to stop the feed of salt solution and dry premix feeds to the SDU. The system is designed such that manual operations may be taken to stop the feed of these materials. For SDUs 3 and 6, an additional action may be required to start ventilation in the SDU if the Maximum Grout Height is exceeded. This would require connecting and operating the SDU Portable Ventilation System. For SDU 6, an additional action may be required to monitor the flammability in the vapor space. This action would be observing a direct-reading flammable gas monitor connected to one of the two CLFL monitor ports designed for this purpose.

13.4.3 PLACING THE FACILITY IN SAFE SHUTDOWN

The safety analysis assumes the facility can be put in a safe configuration prior to or following an NPH event. The identified actions which must be taken are: securing transfers from the SSRTs and SFT (or isolating the SSRTs and SFT discharge paths) upon a tornado warning or high wind warning, securing the SSRT agitator(s) upon a tornado warning, high wind warning, or following a Seismic Event, and stopping feeds to the SDU upon a tornado warning, high wind warning, or following a Seismic Event.

Securing transfers from the SSRTs and SFT (or isolating the SSRTs and SFT discharge paths) upon a tornado warning or high wind warning occurs prior to the event. Therefore, it was qualitatively determined this action could be performed to mitigate the hazard to the facility (Ref. 20).

Securing the SSRT agitator(s) upon a tornado warning or high wind warning occurs prior to the event and the time needed to respond and secure the SSRT agitator(s) following a Seismic Event is days. Therefore, it was qualitatively determined these actions could be performed in adequate time to prevent posing a hazard to the facility (Ref. 20).

Given the slow fill rate in the SDU, it was qualitatively determined that stopping feeds to the SDU could be performed in adequate time to prevent posing a hazard to the facility (Ref. 14, 17, 19, and 21).

13.5 OPTIMIZATION OF HUMAN-SYSTEM INTERFACES

Chapters 3 and 4 identify those facility SSCs that are designated as SS. Chapters 3, 4, and 5 also outline the required human actions necessary to define the accident scenario, and prevent or mitigate the postulated accident scenarios.

The human actions can be categorized into the following types of actions:

- Credited operator actions
- Operator actions accounted for in the unmitigated events for defining the scenario

As discussed previously, a graded approached was applied to HF in this DSA. Each one of these categorizes are discussed below.

13.5.1 CREDITED OPERATOR ACTIONS

The credited actions identified in Chapter 3 with an HSI are to protect the Maximum Grout Height in SDUs 3 and 6 to prevent an SDU vapor space from becoming flammable, prevent an SSRT explosion, and mitigate a tornado/high wind induced spill and fire.

The credited action to prevent exceeding the Maximum Grout Height is to stop the flow of dry premix feeds and salt solution to the mixer in order to maintain the maximum possible vapor space and prevent additional material from entering the SDU which can contribute to the increase in the flammables in the vapor space. This operator action may be required to be performed immediately. The system is designed such that operator indications are provided and operator actions can be taken to stop feed if required.

The required actions for preventing an SSRT explosion are to secure the SSRT agitator(s) upon a tornado warning, high wind warning, or following a Seismic Event. This operator action is performed upon SRSOC notification of a tornado warning, high wind warning, or within 4 days following a Seismic Event. When the Saltstone Facility is destaffed and a tornado warning or high wind warning notification has been received, the credited actions were completed prior to destaffing the facility and no further actions by the Saltstone Facility staff is required for the tornado warning or high wind warning.

When the Saltstone Facility is staffed, the required actions for mitigating a tornado/high wind induced spill and fire are to secure transfers from the SSRTs and SFT (or isolate the SSRT and SFT discharge paths) upon the tornado warning or high wind warning. This operator action is

performed upon SRSOC notification of a tornado warning or high wind warning. The system is designed such that operator actions can be taken to secure transfers from the SSRTs and SFT (or isolate the SSRTs and SFT discharge paths) if required.

During periods when the Saltstone Facility is not operating, one operator performs daily rounds on SSRT equipment/alarm status to ensure SSRT agitator(s) operation is secured. This may be accomplished by a Saltstone Facility operator when staffed or a DWPF operator qualified to ensure SSRT agitator(s) operation is secured.

Operator interface with the grout height indicators was designed to minimize operator errors and improve operator efficiency. The grout height indicators identify the SDU and are numbered in whole feet with additional markings every ¼ foot for SDU 2, 3, 5, and 6. Operator actions to shut down grout production operations upon exceeding the Maximum Grout Height do not require additional training, as shutdown is a routine operation. Shut down of grout production operations includes monitoring and control of DCS indications and interface, displays, alarm systems, user-system interaction, trending and historical data collection, and other general and operation and control functions.

Operator interface with the SSRT agitator(s) and SSRT and SFT transfer operations was designed to minimize operator errors and improve operator efficiency. Operator actions to secure the SSRT agitator(s) and transfers from the SSRTs and SFT do not require additional training, as securing the SSRT agitator(s) and transfers from the SSRTs and SFT are routine operations. Securing SSRT agitator(s) and SSRT and SFT transfer operations includes monitoring and control of DCS indications and interface, displays, alarm systems, user-system interaction, trending and historical data collection, and other general operation and control functions.

The stopping of the introduction of salt solution and dry premix feeds to the SDUs are normal operations for the facility for which operating procedures exist.

The securing of the SSRT agitator(s) and the transfers from the SSRTs and SFT are normal operations for the facility for which operating procedures exist.

The remaining credited actions related to these SSCs are required to be performed over a longer time period (i.e., required to be performed in hours, not minutes). These actions were qualitatively assessed for human performance issues as part of the control selection process, and TSR development. The operator actions are defined in the TSRs. Operations personnel are trained and drilled on the TSR and response to the TSR abnormal conditions.

13.5.2 SCENARIO DEFINING OPERATOR ACTION

Chapter 3 identifies operator actions which are required to protect the assumptions of the hazards analysis. The hazards analysis assumes the maximum potential missing waste from a spill event will be limited to 15,000 gallons. This was qualitatively determined to be bounding for spills in the Saltstone Facility based on the evaluation previously performed for the Concentration, Storage and Transfer Facilities (CSTF) (Ref. 13). The CSTF DSA assumes an unmitigated maximum missing waste of 15,000 gallons based on leak detection time, leak mitigation time,

and the pump flow rates. The leak detection and mitigation times in the Saltstone Facility are equal to or shorter than in CSTF due to the higher resolution of liquid level provided by the smaller tanks in the Saltstone Facility. Flow rates of Saltstone Facility pumps are less than the bounding tank farm pump flow rates. Therefore, this volume is judged to be appropriately conservative for use in Saltstone Facility analyses (Ref. 14, 17, 19, 20, 21)

SSRT agitator(s) status is verified daily, which provides timely monitoring and response to abnormal facility conditions.

13.6 REFERENCES

1. Standards/Requirements Identification Document. SRR-RP-2009-00558.
2. Compliance Assurance Manual. Procedure Manual 8B.
3. SRS Engineering Standards Manual. WSRC-TM-95-1.
4. Deleted
5. Conduct of Engineering. Procedure Manual E7.
6. Conduct of Operations Manual. Procedure Manual 2S.
7. Conduct of Maintenance. Procedure Manual 1Y.
8. Quality Assurance Manual. Procedure Manual 1Q.
9. Employee Safety Manual. Procedure Manual 8Q.
10. Fire Protection Program. Procedure Manual 2Q.
11. Deleted
12. Specific Administrative Controls. DOE-STD-1186-2004, U.S. Department of Energy, Washington DC, August 2004.
13. Human Reliability Analysis of CSTF Maximum Missing Waste Specific Administrative Control. S-CLC-H-01077, Rev. 2.
14. Saltstone Facility Consolidated Hazard Analysis (U). WSRC-TR-2001-00574, Rev. 18.
15. Preparation Guide for U.S. Department of Energy Nonreactor Nuclear Facility Documented Safety Analyses. DOE-STD-3009-94, Change Notice No. 3, U.S. Department of Energy, Washington DC, March 2006.
16. Nuclear Safety Management, Subpart B, Title 10 Code of Federal Regulations (CFR) Part 830, Safety Basis Requirements. U.S. Department of Energy, Washington DC, January 2001.
17. Consolidated Hazard Analysis for Modifications to the Saltstone Facility Process Room in Support of the Enhanced Low Activity Waste Disposal (ELAWD) Project. S-CHA-Z-00003, Rev. 3.
18. Deleted
19. Consolidated Hazard Analysis for Saltstone Disposal Units 3 and 5 Project. S-CHA-Z-00004, Rev. 3.
20. Consolidated Hazard Analysis for the Saltstone Facility Salt Solution Receipt Tank (SSRT) Project. S-CHA-Z-00001, Rev. 4.
21. Consolidated Hazard Analysis for Saltstone Disposal Unit 6 Project. S-CHA-Z-00005, Rev. 2.

SALTSTONE FACILITY

DOCUMENTED SAFETY ANALYSIS

CHAPTER 14

QUALITY ASSURANCE

Revision 14

December 2017

TABLE OF CONTENTS

Page

14.0 QUALITY ASSURANCE 14-1

14.1 INTRODUCTION 14-1

14.2 REQUIREMENTS 14-1

14.3 QUALITY ASSURANCE PROGRAM AND ORGANIZATION 14-1

14.4 QUALITY IMPROVEMENT 14-1

14.5 DOCUMENTS AND RECORDS 14-1

14.6 QUALITY ASSURANCE PERFORMANCE 14-2

14.6.1 Work Processes 14-2

14.6.2 Design 14-2

14.6.3 Procurement 14-2

14.6.4 Inspection and Testing for Acceptance 14-3

14.6.5 Independent Assessment 14-3

14.7 REFERENCES 14-4

14.0 QUALITY ASSURANCE

14.1 INTRODUCTION

This chapter of the Saltstone Facility DSA discusses general aspects of the Quality Assurance Manual 1Q (Ref. 2) policies and programs, document control and records management, and QAPs that ensure that safety-related activities meet requirements as applied to the Saltstone Facility.

14.2 REQUIREMENTS

The S/RIDs (Ref. 3) state the codes, standards, and regulations governing QA policies and program elements for the SRS. Programmatic compliance assessments are performed against the S/RIDs and documented as specified in the Compliance Assurance Manual 8B (Ref. 4).

The format and content of the chapter satisfies the requirements of DOE-STD-3009-94 (Ref. 1).

14.3 QUALITY ASSURANCE PROGRAM AND ORGANIZATION

The Saltstone Facility follows the requirements of the Procedure Manual 1Q and the QAP requirements set forth in Procedure Manual 1B (Ref. 2, 5). Management duties and responsibilities are delineated in Chapter 17, along with the interface of the Saltstone Facility QA organization.

LW organization program manuals further delineate and implement QA requirements within the Saltstone Facility. QA requirements within the LW organization reflect a combination of directly implementable procedures as found in Procedure Manual 1Q and Procedure Manual 1B, along with line organization procedures covering QA elements (Ref. 2, 5).

14.4 QUALITY IMPROVEMENT

The Saltstone Facility follows a quality improvement program as implemented in accordance with the requirements of the Quality Assurance Manual 1Q (Ref. 2). The Quality Assurance Manual 1Q establishes the processes to detect, prevent, and correct quality problems. Tracking of quality improvement items is conducted in accordance with the Management Requirements and Procedures, Procedure 4.23 (Corrective Action Program), subsection “Site Tracking, Analysis, and Reporting (STAR)” (Ref. 5).

14.5 DOCUMENTS AND RECORDS

QA documents and records at the Saltstone Facility are generated, managed, controlled, and stored as described in Procedure Manual 1Q (Ref. 2).

14.6 QUALITY ASSURANCE PERFORMANCE

14.6.1 WORK PROCESSES

The Saltstone Facility follows the work processes controls programs as implemented by the Quality Assurance Manual 1Q (Ref. 2). The following elements of work processes are implemented in accordance with Quality Assurance Manual 1Q at the Saltstone Facility:

- Performance of work
- Identification and control of items
- Handling, storing, and shipping
- Calibration and maintenance of monitoring and data collection equipment
- Control of computer software
- Work process controls to prevent/detect Suspect Counterfeit Items

Conduct of Maintenance Procedure Manual 1Y (Ref. 6) includes specific procedures governing the Maintenance Program, including calibration and maintenance. Procedure Manual 1B, Procedure 5.19 (Ref. 5) details the requirements for the SRS Suspect and Counterfeit Item Program.

14.6.2 DESIGN

The Saltstone Facility follows the design program as implemented by the Quality Assurance Manual 1Q (Ref. 2). In addition, the Conduct of Engineering and Technical Support Procedure Manual E7 (Ref. 7) discusses the performance and control of SRS design, including design requirements, inputs, processes, outputs, changes, records, and organizational interfaces.

The SRS design program includes the following topics:

- Design control
- Design change control
- Temporary modifications
- Design interfaces
- Design records
- Design verification
- Software design control

14.6.3 PROCUREMENT

The Saltstone Facility follows the procurement program as implemented by the Quality Assurance Manual 1Q (Ref. 2). In addition, the Saltstone Facility follows the Procurement Management Manual 7B (Ref. 8), which provides guidelines regarding preparation, review, and approval of procurement documents. Procurement Specification Procedure Manual 3E (Ref. 9),

describes the general process for specified procurement requirements and the required documentation for procurement.

14.6.4 INSPECTION AND TESTING FOR ACCEPTANCE

The Saltstone Facility follows the inspection and acceptance testing program as implemented by the Quality Assurance Manual 1Q (Ref. 2). Procedure Manual 1Q defines the SRS requirements for inspection, inspection status, and control of nonconforming items.

14.6.5 INDEPENDENT ASSESSMENT

Management Assessments and self-assessments at the Saltstone Facility are performed as described in the Procedure Manual 12Q (Ref. 10). Procedure Manual 1B (Ref. 5) provides guidelines for identifying management improvement opportunities. Also, the Saltstone Facility implements the management overview program described in Procedure Manual 2S (Ref. 11), which requires self-assessments at the facility level to ensure that key attributes of conduct of operations training and maintenance are implemented.

Teams have been established by the Contractor Assurance Organization to measure the effectiveness of facilities and related ES&H and QA programmatic performance. This program provides facility and senior management with performance-based information and satisfies contractual obligations for company-level independent oversight. Assessment Manual 12Q (Ref. 10) defines the structure, principles, responsibilities, associated requirements, and procedures for conducting independent assessments through this program.

14.7 REFERENCES

1. Preparation Guide for U.S. Department of Energy Nonreactor Nuclear Facility Documented Safety Analyses. DOE-STD-3009-94, Change Notice No. 3, U.S. Department of Energy, Washington DC, March 2006.
2. Quality Assurance Manual. Procedure Manual 1Q.
3. Standards/Requirements Identification Document. SRR-RP-2009-00558.
4. Compliance Assurance Manual. Procedure Manual 8B.
5. Management Requirements and Procedures. Procedure Manual 1B.
6. Conduct of Maintenance. Procedure Manual 1Y.
7. Conduct of Engineering and Technical Support. Procedure Manual E7.
8. Requisitioning Manual. Procedure Manual 7B.
9. Procurement Specification Procedure Manual. Procedure Manual 3E.
10. Assessment Manual. Procedure Manual 12Q.
11. Conduct of Operations Manual. Procedure Manual 2S.

SALTSTONE FACILITY

DOCUMENTED SAFETY ANALYSIS

CHAPTER 15

EMERGENCY PREPAREDNESS PROGRAM

Revision 12

November 2015

TABLE OF CONTENTS

Page

15.0 EMERGENCY PREPAREDNESS PROGRAM 15-1

15.1 INTRODUCTION 15-1

15.2 REQUIREMENTS 15-1

15.3 SCOPE OF EMERGENCY PREPAREDNESS 15-1

15.4 REFERENCES 15-2

15.0 EMERGENCY PREPAREDNESS PROGRAM

15.1 INTRODUCTION

This chapter of the Saltstone Facility DSA discusses general aspects of the Saltstone Emergency Preparedness program scope, philosophy, objectives, organization, and response. This chapter relies heavily upon the information provided in the SRS Emergency Plan, SCD-7 (Ref. 2), and refers to it as necessary. Emergency preparedness processes, as described in SCD-7, have been developed and implemented through sitewide programs. Information specific to the Saltstone Facility that is not discussed in SCD-7 is presented in this chapter.

15.2 REQUIREMENTS

The S/RIDs (Ref. 3) state the codes, standards, and regulations governing the SRS emergency preparedness elements. Programmatic compliance assessments are performed against the S/RIDs and documented, as specified, in the Compliance Assurance Manual 8B (Ref. 4).

The format and content of this chapter satisfies the requirements of DOE-STD-3009-94 (Ref. 1).

15.3 SCOPE OF EMERGENCY PREPAREDNESS

The Saltstone Facility follows the emergency preparedness processes discussed in SCD-7 (Ref. 2).

Chapter 3 of this DSA identifies and describes the hazards, accidents, and consequences associated with natural phenomena and external events, fires, explosions, and spills at the Saltstone Facility. SCD-7 (Ref. 2) addresses these categories of accidents.

Releases of hazardous materials (chemicals and radionuclides) were postulated for the Saltstone Facility. Potential consequences were evaluated against specified PAC at downwind receptors of interest. The Saltstone Facility did not identify any Classifiable Operational Emergencies (i.e., PAC are not expected to be exceeded at identified receptors); therefore, neither an Emergency Planning Hazards Assessment, Emergency Action Levels, nor an Emergency Planning Zone are required (Ref. 6).

15.4 REFERENCES

1. Preparation Guide for U.S. Department of Energy Nonreactor Nuclear Facility Documented Safety Analyses. DOE-STD-3009-94, Change Notice No. 3, U.S. Department of Energy, Washington DC, March 2006.
2. Savannah River Site Emergency Plan. Procedure Manual SCD-7.
3. Standards/Requirements Identification Document. SRR-RP-2009-00558.
4. Compliance Assurance Manual. Procedure Manual 8B.
5. Deleted
6. Triennial Review of Hazards Survey (HS) for Z-Area, S-EHS-Z-00001. OSSES-15-029, Department of Energy, Savannah River Operations, Aiken SC.

SALTSTONE FACILITY

DOCUMENTED SAFETY ANALYSIS

CHAPTER 16

PROVISIONS FOR DECONTAMINATION AND DECOMMISSIONING

Revision 14

December 2017

TABLE OF CONTENTS

Page

16.0 PROVISIONS FOR DECONTAMINATION AND DECOMMISSIONING 16-1

16.1 INTRODUCTION 16-1

16.2 REQUIREMENTS..... 16-1

16.3 DESCRIPTION OF CONCEPTUAL PLAN..... 16-1

16.4 REFERENCES 16-2

16.0 PROVISIONS FOR DECONTAMINATION AND DECOMMISSIONING

16.1 INTRODUCTION

This chapter of the Saltstone Facility DSA discusses the general aspects of the Saltstone Facility conceptual Decontamination and Decommissioning (D&D) plans.

16.2 REQUIREMENTS

The S/RIDs (Ref. 2) state the codes, standards, and regulations governing the D&D elements of the SRS. Programmatic compliance assessments are performed against the S/RIDs and documented as specified in the Procedure Manual 8B (Ref. 3). The Standards Management/Compliance Section maintains records of the programmatic compliance assessments.

The format and content of this chapter satisfies the requirements of DOE-STD-3009-94 (Ref. 1).

16.3 DESCRIPTION OF CONCEPTUAL PLAN

In accordance with the requirements of DOE Order 430.1B1, planning for D&D of the Saltstone Facility will be initiated prior to termination of facility operations (Ref. 4). The “Z-Area Closure Plan” was submitted to DOE and SCDHEC in 1995 as an addendum to the Permit Application for the SDF. DOE Order 430.1B1 provides guidance on the development of decommissioning plans (Ref. 4) and is implemented by Procedure Manual 1C (Ref. 5).

Any changes in the mission of the Saltstone Facility will be evaluated relative to design and administrative features for facilitating D&D activities. D&D will be carried out for the existing structures for the SPF. Plans for decommissioning SPF will be developed as the SPF facility approaches the end of its useful life.

The SDF is a permanent disposal facility. This facility will undergo an environmental closure.

16.4 REFERENCES

1. Preparation Guide for U.S. Department of Energy Nonreactor Nuclear Facility Documented Safety Analyses. DOE-STD-3009-94, Change Notice No. 3, U.S. Department of Energy, Washington DC, March 2006.

2. Standards/Requirements Identification Document. SRR-RP-2009-00558.

3. Compliance Assurance Manual. Procedure Manual 8B.

4. Real Property Asset Management. DOE Order 430.1B1 Change 2, U.S. Department of Energy, Washington DC, April 2011.

5. Facility Disposition Manual. Procedure Manual 1C.

SALTSTONE FACILITY

DOCUMENTED SAFETY ANALYSIS

CHAPTER 17

MANAGEMENT, ORGANIZATION, AND INSTITUTIONAL SAFETY PROVISIONS

Revision 15

July 2018

TABLE OF CONTENTS

Page

17.0 MANAGEMENT, ORGANIZATION, and INSTITUTIONAL SAFETY PROVISIONS 17-1

17.1 INTRODUCTION 17-1

17.2 REQUIREMENTS 17-1

17.3 ORGANIZATIONAL STRUCTURE, RESPONSIBILITIES, AND INTERFACES 17-1

17.3.1 Organization Structure 17-1

17.3.2 Organizational Responsibilities 17-2

17.3.3 Staffing and Qualifications 17-2

17.4 SAFETY MANAGEMENT POLICIES AND PROGRAMS 17-3

17.4.1 Safety Review and Performance Assessment 17-3

17.4.2 Configuration and Document Control 17-4

17.4.3 Occurrence Reporting 17-5

17.4.4 Safety Culture 17-5

17.5 REFERENCES 17-6

17.0 MANAGEMENT, ORGANIZATION, AND INSTITUTIONAL SAFETY PROVISIONS

17.1 INTRODUCTION

This chapter of the Saltstone Facility DSA discusses general aspects of the following:

- The overall structure of the organizations and entities involved in safety-related functions not described elsewhere in this DSA, including key responsibilities and interfaces
- The safety programs that promote safety consciousness and morale, including safety review and performance assessment, configuration and document control, occurrence reporting, and safety culture

This chapter relies heavily upon the information provided in the Management Requirements and Procedure Manual 1B (Ref. 2) and refers to it as necessary. The management, organization, and institutional safety provisions as described in Procedure Manual 1B have been developed and implemented through site wide programs.

17.2 REQUIREMENTS

The S/RIDs (Ref. 3) state the codes, standards, and regulations governing the management, organization, and institutional safety provision elements of the SRS. Programmatic compliance assessments are performed against the S/RIDs and documented as specified in the Compliance Assurance Manual 8B (Ref. 4). The Standards Management/Compliance Section maintains records of the programmatic compliance assessments.

The format and content of this chapter satisfies the requirements of DOE-STD-3009-94 (Ref. 1).

17.3 ORGANIZATIONAL STRUCTURE, RESPONSIBILITIES, AND INTERFACES

17.3.1 ORGANIZATION STRUCTURE

Savannah River Remediation LLC (SRR) is the current Liquid Waste Contractor as of July 01, 2009. SRS management and operations are currently the responsibility of the Management and Operations (M&O) contractor and the LW contractor. LW is the parent organization of the Saltstone Facility. The LW organization is managed by its President and Project Manager. LW includes the following project organizations:

- Engineering
- Closure Projects (part of CSTF)
- Environmental, Safety, Health, and Quality Assurance (ESH&QA)
- Projects, Design and Construction

- Operations
    - DWPF/Saltstone
    - CSTF (Tank Farms, ETP, MCU)

The Facility Manager reports to the Director of DWPF and Saltstone Facility who reports to the Chief Operating Officer and Deputy Project Manager, who reports to the LW President and Project Manager. The LW organization is supported by Engineering, Maintenance, QA and other support groups as necessary to safely manage the radioactive waste that is disposed of at the Saltstone Facility.

17.3.2 ORGANIZATIONAL RESPONSIBILITIES

The Facility Manager has direct responsibility for managing the safe operation and maintenance of the Saltstone Facility. Responsibilities includes the design, procurement, testing, repair, modifications, costs, and operation of all Saltstone Facility processes, equipment, and facilities; the safety, planning, and training of employees in the Saltstone Facility; and communication between the Saltstone Facility, LW Management, and DOE. The following organizations are responsible for individual elements of their respective programs: Operations, Engineering, Maintenance, Facility Support, Radiological Controls, ES&H and QA.

17.3.3 STAFFING AND QUALIFICATIONS

The Saltstone Facility program for personnel selection, qualification, and training is conducted in accordance with Procedure Manual 4B (Ref. 5), resulting in trained and qualified personnel at the Saltstone Facility.

The operations conducted in the Saltstone Facility do not require the continuous monitoring of process parameters; thus, there is no need for rotating shifts. Staffing levels are commensurate with the level of processing being conducted and do not require pre-established levels for safety considerations except as cited in the TSRs (Ref. 6). Operational safety for the Saltstone Facility is discussed in Chapter 11 of this DSA.

Selection and qualification requirements for personnel are defined in terms of education, experience, training, and other special requirements necessary for assigned duties. Selection requirements are based on a systematic analysis of job duties and are documented in position descriptions and qualification standards. Personnel are selected and qualified in accordance with the Procedural Manual 1B (Ref. 2). Procedure Manuals 2S and S25 provide site- and facility-level technical and response procedure requirements, and Procedure Manual 4B provides the requirements on the training and qualification of facility personnel (Ref. 7, 8, 5).

The Saltstone Facility training program has been developed and implemented in accordance with Procedure Manual 4B to ensure that personnel are effectively trained and qualified to safely operate and maintain the Saltstone Facility (Ref. 5). Staff safety performance is monitored in accordance with Procedure Manual 2S (Ref. 7).

17.4 SAFETY MANAGEMENT POLICIES AND PROGRAMS

The key elements in the safety program are the strength and consistency of management support and involvement. It is the policy of LW management that safety is the highest priority. The commitment of LW management to the principles of safety is demonstrated by the following:

- Management's comprehensive understanding of the site progress and problems in enhancing safety
- Implementation of administrative programs and procedures, in conjunction with area design, to ensure that safety is maintained to the highest extent practical in conformance with S/RIDs (Ref. 3)
- Management's assignment of high priority for notification and procedural changes to enhance facility safety
- Management's review and approval of realistic and measurable safety goals to ensure that they reflect a full commitment to safety principles
- Monitoring of monthly progress towards the safety goals by LW managers and supervisors
- Establishment of a training program to educate employees in safety procedures and practices and to emphasize that compliance with these procedures and practices is a condition of employment

The safety program consists of guidelines, management and worker philosophies, practices, instructions, and procedures for administrative control of site personnel activities, work practices, and records.

LW has adopted DOE's approach to Integrated Safety Management. A major concept of Integrated Safety Management is the integration of safety awareness and good practices into all aspects of work conducted at DOE Complex facilities. Simply stated, work should be conducted in such a manner that protects workers and other people, and does not cause harm to the environment. Safety is an integral part of each job, not a stand-alone program.

17.4.1 SAFETY REVIEW AND PERFORMANCE ASSESSMENT

The Facility Operations Safety Committee (FOSC) performs oversight for the Saltstone Facility. Additionally, a Site Safety Review Committee handles issues that have site wide significance.

The FOSC for the Saltstone Facility is chartered with the responsibility of performing independent reviews of environmental, safety, health, safeguards, and QA practices within the Saltstone Facility, as described in the Procedures Manual 1B (Ref. 2). The FOSC consists of multi-discipline representatives that must meet the qualification and training requirements specified in Procedure Manual 1B (Ref. 2). The FOSC functions and responsibilities are established according to approved procedures and contain, as a minimum, review of proposed changes to TSRs and Bases, review of discovery and positive USQ evaluations, and review of proposed response plans.

Effective independent oversight is accomplished by providing a sufficient and appropriately trained oversight staff capable of preparing and maintaining sitewide policies, standards, procedures, practices, guidelines, and instructions related to ES&H matters as per the Compliance Assurance Manual, Procedure Manual 8B (Ref. 4).

The Saltstone Facility performs the USQ reviews by comparing the proposed activity to the facility SB documentation to determine whether a proposed change, test, or experiment involves a USQ. Procedure Manual 11Q discusses the conditions that result in a USQ (Ref. 9).

The Saltstone Facility participates in the self-assessment process and independent assessment programs in accordance with site wide procedures (Ref. 10), as described in Chapter 14 of this DSA.

In addition, other related programs are implemented in accordance with site requirements, including the Lessons Learned Program (Ref. 2). The Lessons Learned Program is a systematic review of operating experiences at SRS facilities and of similar DOE complex and commercial nuclear industry facilities, the application of review to promote the safe, effective operation of SRS facilities, and the enhancement of safety and health for SRS employees and the public.

17.4.2 CONFIGURATION AND DOCUMENT CONTROL

Configuration control at the Saltstone Facility is achieved through implementation of Manual E7, Conduct of Engineering (Ref. 12). Document control activities are conducted in accordance with the QA Manual 1Q (Ref. 13).

17.4.2.1 Saltstone Facility Configuration Management

The Saltstone Facility CM program is a facility lifetime program that assures the facility is maintained and operated within its design and safety envelopes. CM program is an integrated and systematic process to define the physical and functional requirements of the facility and to document how they are implemented. The program is implemented using a graded approach based on a System, Structure, or Component's (SSC) significance. The physical and functional requirements of the SSCs are defined and essential attributes/critical functions are identified, verified, documented and maintained. The change controls are in place to ensure proper documentation, reviews, and approval of the changes. The CM Program details are summarized in Reference 12.

Saltstone Facility Engineering is responsible for maintaining the configuration control of the technical baseline. The physical and process changes to the baseline configurations are properly proposed, evaluated, implemented, verified, and incorporated in the affected documents in accordance with the requirements of the Manual E7, Conduct of Engineering (Ref. 12).

17.4.2.2 Document Control

SRS document control activities are conducted in accordance with the Management Requirements and Procedures (MRPs) contained in Manual 1B (Ref. 2). These activities include: identification of the documents (both working documents and historical records),

control, tracking, storage, preservation, and retrieval of documents in an effective and timely manner.

17.4.3 OCCURRENCE REPORTING

Procedure Manual 9B implements a system of procedures referred to as the SIRIM process that describes the site occurrence reporting process used at the Saltstone Facility (Ref. 14). The Manual also describes the provisions for the selection and analysis of information for occurrence reports, the evaluation of operational experience and trends, and for the development of feedback, corrective actions, and communicating lessons learned.

17.4.4 SAFETY CULTURE

A safety culture is a work atmosphere that promotes the interest and involvement of all personnel in their personal safety and the safety of their co-workers. The safety culture facilitates a questioning attitude toward safety-related activities and equipment and ensures that personnel understand the potential risks to the facility and workers as well as the rewards and sanctions associated with their own personal safety performance. This atmosphere is exemplified by employee participation in the site safety and health program as implemented through documents such as the Employee Safety Manual, Procedure Manual 8Q, and Industrial Hygiene Manual, Procedure 4Q (Ref. 15, 16).

Management Practices, along with their implementing programs, foster a safety culture at SRS. Management Practices are specified in Manual 1-01, and are implemented through Procedure Manual 1B, and program-specific site manuals (Ref. 11, 2).

17.5 REFERENCES

1. Preparation Guide for U.S. Department of Energy Nonreactor Nuclear Facility Documented Safety Analyses. DOE-STD-3009-94, Change Notice No. 3, U.S. Department of Energy, Washington DC, March 2006.
2. Management Requirements and Procedures. Procedure Manual 1B.
3. Standards/Requirements Identification Document. SRR-RP-2009-00558.
4. Compliance Assurance Manual. Procedure Manual 8B.
5. Training and Qualification Program Manual. Procedure Manual 4B.
6. Technical Safety Requirements, Saltstone Facility. S-TSR-Z-00002.
7. Conduct of Operations Manual. Procedure Manual 2S.
8. LW Procedure Systems Administrative Procedures Manual. Procedure Manual S25.
9. Facility Safety Document Manual. Procedure Manual 11Q.
10. Assessment Manual. Procedure Manual 12Q.
11. Management Policies. Manual 1-01.
12. Conduct of Engineering and Technical Support. Procedure Manual E7.
13. Quality Assurance Manual. Procedure Manual 1Q.
14. Site Item Reportability and Issue Management (SIRIM). Procedure Manual 9B.
15. Employee Safety Manual. Procedure Manual 8Q.
16. Industrial Hygiene Manual. Procedure Manual 4Q.