DOCUMENT REVIEW/APPROVAL

Document: G-SD-Z-00003 **Revision:** 14

Title: SALTSTONE FACILITY - SYSTEM DESIGN DESCRIPTION (U) SALTSTONE PROCESS

DOCUMENT REVIEW/APPROVAL

Classification Reviewer: N/A

Date: 06/20/2019

DOCUMENT REVIEW/APPROVAL

Document: G-SD-Z-00003 **Revision:** 14

Title: SALTSTONE FACILITY - SYSTEM DESIGN DESCRIPTION (U) SALTSTONE PROCESS

Document Type SYD **Functional Classification:** PS

Description: Incorporated amendments, SBD-CRF-Z-19001 (SWPF) and minor formatting and corrections.

Amendments Incorporated:

E-DCF-Z-00408
G-DCF-Z-00036
G-DCF-Z-00038
G-DCF-Z-00039

References:
M-DCP-Z-10002,M-DCP-Z-10003,WSRC-SA-2003-00001,SBD-CRF-Z-19001

Facility Code(s): SS/SALTSTONE

Originator: SHAH, SATISH C. **Date:** 06/05/2019

Reviewers

1. N/A	N/A	06/05/2019

Approvers

1. STAUB, AARON V.	N/A	Approved	06/20/2019

VERIFIER/CHECKER

Verifier/Checker: PLAYER, RICHARD C. **Date:** 06/19/2019

Verification/Check Methods Document Review

DESIGN AUTHORITY

Design Authority: SHAH, SATISH C. **USQS Required:** No

Date: 06/20/2019 **TRP Number:** N/A

G-SD-Z-00003

SALTSTONE FACILITY
SYSTEM DESIGN DESCRIPTION (U)
SALTSTONE PROCESS

Revision Number	**14**
Revision Date	**June 5, 2019**

Savannah River Remediation, LLC
Savannah River Site
Aiken, South Carolina 29808

Change Control Record

Facility Name	*SDD Unique Identifier*
Saltstone Facility (SSF)	G-SD-Z-00003

Technical Agency Approval

Approvals Maintained in DCR/EDWS

Signature *Date:*

Design Authority Approval

Signature *Approvals Maintained in DCR/EDWS* *Date:*

Summary of Changes

Revision No. and Date	*DCF/DCN Number*	*Pages Affected by the Change*	*DCF/DCN Incorporation Verification*
Rev. 0, 6/16/93	N/A	Transmitted to WSRC	N/A
Rev. 1, 4/12/95	N/A	Reviewed/Revised by WSRC for Issue	N/A
Rev. 2, 6/5/01	Incorporated G-DCF-Z-00002 & 00003, 00006, and M-DCP-Z-97003-M003	Revision bars identify changes due to incorporation of listed change documents.	N/A
Rev. 3, 9/15/03	Incorporated G-DCF-Z-00012, J-DCP-Z-03001 & LCS Modifications	Revision bars identify changes due to incorporation of listed change documents.	N/A
Rev. 4, 9/21/05	Updated and revised for 0.2 Ci/gal modifications	Revision bars identify changes due to incorporation of listed change documents.	N/A
Rev. 5, 3/27/06	Incorporated J-DCP-Z-06001, added NFPA 69 discussion	Revision bars identify changes due to incorporation of listed change documents.	N/A
Rev. 6 , 4/2010	Incorporated E-DCP-Z-07003-G001, J-DCF-Z-00275, M-DCP-Z-06002-G001, SSF-TMC-10-001 T-DCF-Z-00001	Complete Revision. Revision bars not included.	N/A
Rev. 7, 8/2010	Incorporated Rupture Pin Design M-DCP-Z-06007 and revised NFPA 69 argument for SFT	Revision bars identify changes due to incorporation of listed change documents	N/A
Rev. 8, 1/2012	G-DCF-Z-00021 J-DCF-Z-00428 J-DCF-Z-00449 J-DCF-Z-00480 M-DCP-Z-10008-M-00002 G-DCF-Z-00023	Revision bars identify changes due to incorporation of listed change documents	N/A
Rev. 9, 6/2012	Incorporated M-DCP-Z-08005-J-00005 and ELAWD related	Revision bars identifies changes	N/A

	changes		
Rev. 10, 5/2013	Incorporated M-DCF-Z-00389, DA and Project Engineering comments	Revision bars identifies changes due to incorporation of listed change documents	N/A
Rev. 11, 4/2015	Incorporated following amendments: G-DCF-Z-00030, R0 G-DCF-Z-00031, R0 J-DCF-Z-00613, R0 J-DCP-Z-14005-J-00002, R0 M-DCF-Z-00436, R2 P-DCF-Z-00105, R0 U-DCF-Z-00017, R0 X-DCF-Z-00002, R0	Revision bars identifies changes due to incorporation of listed change documents	N/A
Rev. 12, 4/2015	Complete Revision based on the addition of the SSRT Facility (M-DCP-Z-10002 and M-DCP-Z-10003) and WSRC-SA-2003-00001, Rev. 12 Incorporated following amendments: U-DCF-Z-00023, R0 U-DCF-Z-00027, R0 G-DCF-Z-00032, R0 Incorporated 2015 Annual Updates per WSRC-IM-94-10, R154	Revision bars identifies changes	N/A
Rev. 13, 8/2018	Incorporated following amendments: U-DCF-Z-00031 U-DCF-Z-00035 U-DCF-Z-00036 U-DCF-Z-00037	Revision bars identifies changes	N/A
Rev. 14, 4/2019	Incorporated SBD-CRF-Z-19002, and following amendments: E-DCF-Z-00408 G-DCF-Z-00036 G-DCF-Z-00038 G-DCF-Z-00039	Revision bars identified changes	N/A

TABLE OF CONTENTS

TABLE OF FIGURES **7**

SUMMARY **8**

1.0 FUNCTIONS AND DESIGN REQUIREMENTS **9**

1.1 PROCESS AND SAFETY FUNCTIONS 9
1.2 DESIGN REQUIREMENTS 9
1.3 DESIGN BASIS RATIONALE 14

2.0 DESIGN DESCRIPTION **15**

2.1 DETAILED SYSTEM DESCRIPTION 15
2.2 SYSTEM PARAMETERS AND PERFORMANCE CHARACTERISTICS 24
2.3 SYSTEM ARRANGEMENT 24
2.4 COMPONENT DESIGN DESCRIPTIONS 26
2.5 CODES AND STANDARDS 37
2.6 INSTRUMENTATION AND CONTROL 38
2.7 SYSTEM INTERFACES 50

3.0 OPERATION **53**

3.1 INITIAL CONFIGURATION 53
3.2 STARTUP 53
3.3 NORMAL OPERATION 54
3.4 SHUTDOWN 54
3.5 INFREQUENT OPERATIONS 55

4.0 SET POINTS, SYSTEM LIMITATIONS, AND PRECAUTIONS **56**

4.1 SETPOINTS 56
4.2 SYSTEM LIMITATIONS AND PRECAUTIONS 67

5.0 SYSTEM UPSETS AND RECOVERY SEQUENCES **68**

5.1 DRY MATERIAL CONVEYING FAILURE 68
5.2 PROCESS VENT BLOWER FAILURE 68
5.3 HEPA FILTER FAILURE OR PLUGGAGE 68
5.4 SALTSTONE TRANSFER PUMP FAILURE 68
5.5 GROUT TRANSFER LINE BLOCKAGE 68
5.6 SALTSTONE RUPTURE PIN FAILURE 68
5.7 OVERFLOW OF SALT SOLUTION TANKS 69
5.8 MIXER OVERFLOW 69
5.9 HOPPER OVERFLOW 69
5.10 PIG LAUNCH FAILURE 69
5.11 SDU OVERFLOW 70
5.12 LOSS OF ELECTRICAL POWER 70

6.0 MAINTENANCE **71**

6.1 PREVENTIVE MAINTENANCE, INSPECTION, AND SURVEILLANCE 71
6.2 CORRECTIVE MAINTENANCE 71

7.0 APPENDICES **84**

7.1 REFERENCES 84
7.2 PARAMETERS LIST 84
7.3 DRAWINGS AND SPECIFICATIONS 85
APPENDIX K: DEFENSE IN DEPTH/IMPORTANT TO SAFETY COMPONENTS 88
APPENDIX N: SALTSTONE POTENTIAL TRAPPED HYDROGEN LOCATIONS 92

TABLE OF FIGURES

Figure 1: Simplified Process Diagram 72
Figure 2: Silo Storage 73
Figure 3: Premix Weighing and Blending 74
Figure 4: Premix Blending/Conveying Compressed Air Supply 75
Figure 5: Premix Blending 76
Figure 6: Salt Solution Feed 77
Figure 7: Saltstone Mixing and Transfer 78
Figure 8: SFT Vent Systems 79
Figure 9: Pig Launching Four-Way Valve 80
Figure 10: Saltstone Mixing Feed Controls 81
Figure 11: SSRT Process 82
Figure 12: SSRT PVV system 83

SUMMARY

The Saltstone Facility in Z-Area processes and disposes of radioactive salt solution from the H-Area tank farm. The salt solution consists of low-level mixed waste primarily from the Effluent Treatment Project operations (ETP), Modular Caustic-Side Solvent Extraction Processing Unit operation (MCU), and Salt Waste Processing Facility (SWPF). The Z-Area Saltstone Facility immobilizes the radioactive solution into a concrete-like product (Saltstone) suitable for safe disposal in an SDU.

The Saltstone process system includes dry bulk material handling and storage, salt solution storage and processing, Saltstone Mixing and Transfer, and SDU filling. Cement, slag, and flyash are unloaded from trucks and pneumatically conveyed to storage silos. The dry solids are discharged from the silos, weighed, and blended to produce a premix. Salt solution is received from H-Area through the inter-area transfer system and stored in a feed tank. The premix and salt solution are fed to a continuous mixer to produce Saltstone grout. The grout is pumped to a SDU, where it hardens to form Saltstone. The Saltstone is a leach-resistant solid that is non-hazardous as defined by regulations. The combination of the Saltstone waste form the SDU limits migration of the chemical and radioactive constituents such that the groundwater at the disposal site boundary will meet drinking water standards.

In 2012, the Saltstone Facility incorporated processing modifications under the Enhanced Low Activity Disposal (ELAWD) Program (M-DCP-Z-10011) to support the needs of accelerated Tank Closure Strategy and future salt processing requirements.

In 2015, the Saltstone Facility incorporated processing modifications under the Salt Solution Receipt Tank (SSRT) Project (Y544) to support the waste transfer and storage of Decontaminated Salt Solution (DSS) when the Salt Waste Processing Facility (SWPF) comes on line. These modifications are included in M-DCP-Z-10002, M-DCP-Z-14002, and M-DCP-Z-10003.

1.0 FUNCTIONS AND DESIGN REQUIREMENTS

The function of the Saltstone process is to stabilize salt solution for disposal in SDUs by converting the aqueous solution to a non-hazardous solid.

1.1 PROCESS AND SAFETY FUNCTIONS

The system shall do the following:

- Receive and store salt solution from the inter-area transfer system.
- Receive, transfer, and store dry materials (cement, flyash, and slag).
- Weigh, blend, and transfer the mixture (referred to as premix) of cement, flyash, and slag.
- Weigh and feed premix to the Saltstone grout production process.
- Mix the salt solution with the premix to form Saltstone grout.
- Pump the Saltstone grout to a disposal SDU.
- Produce a Saltstone product considered non-hazardous as defined by regulatory testing – toxicity characteristic leaching procedure (TCLP).
- Treat vent gases to minimize radionuclide emissions to atmosphere.

1.2 DESIGN REQUIREMENTS

1.2.1 Operational Requirements

1.2.1.1 Clean Cap Water System

The following shall be provided:

- Clean Cap Batch Tank (CCBT) with the capacity to accommodate inhibited water (high pH) for purposes of making clean cap grout and flushing process equipment
- Agitation for mixing
- Capability of feeding the clean cap water at a controlled rate to the Saltstone mixer
- Pad and dike to contain tank leakage and overflows
- Radiation shielding for the tank

1.2.1.2 Salt Solution Throughput

- Annual throughput of salt solution shall be up to 6 million gallons per year, based on a straight day-shift operation.
- The design shall accommodate a throughput turndown of 50 percent.

1.2.1.3 Dry Bulk Material Supply

The following shall be provided:

- Dry bulk materials, such as cement, slag, and flyash, in the quantities necessary to support the above-stated salt solution processing rates. The average Saltstone formulation consists of 47 wt% salt solution and 53 wt% cement/slag/flyash blends.

- Unloading facilities (truck) capable of unloading/receiving 500 ton per day dry materials. The unloading facility may be connected to a magnetic separator to eliminate debris in the dry materials. The facility is capable of transferring cement, slag, and flyash, separately, to any one of the four silos.
- Silo storage capacity to support a minimum of 7 days of operation
- Facilities capable of producing a uniformly blended premix consisting of specific proportions of cement, slag, and flyash
- Capability of transferring blended premix to a premix feeding system
- A bin-feeder system to feed the premix to the Saltstone mixer, at variable controlled to a nominal rate of 35 tons per hour (tph)

1.2.1.4 Salt Solution

The following shall be provided:

- Salt Solution Storage with the capacity to accept waste material, accommodate short term transients in inlet and outlet flow rates and capacity for receiving spent flush water from a process flush. This will be provided for using the Salt Feed Tank (SFT) and the Salt Solution Receipt Tanks (SSRTs)
- Agitation for suspending solids
- Capability of feeding the salt solution at a controlled rate to the Saltstone mixer
- Pad and dike to contain tank leakage and overflows
- Radiation shielding for the tank

1.2.1.5 Admixture Chemicals

Admixture chemicals are prohibited for use in the Saltstone Facility. However, admixture chemicals are included in flammability and criticality calculations for the SDUs to ensure conservatism in the analysis. (Reference: 7.1.2.5)

1.2.1.6 Saltstone Mixing and Transfer

- Salt solution shall be mixed with premix (cement, slag, flyash) to produce Saltstone grout.
- On-line instrumentation for monitoring of grout density shall be provided.
- Grout shall be pumped to storage SDU through a 3 in. dia. pipeline up to 3,500 feet long.
- Saltstone Mixing and Transfer system equipment shall be capable of being flushed and cleaned prior to shut down.
- Temperature of the Saltstone in the SDU shall not exceed 90°C during filling and hardening.
- Saltstone product shall meet criteria for nonhazardous materials per TCLP test.
- A Flush System is provided to allow flushing of transfer lines downstream of the grout transfer pump.
- Saltstone mixer, transfer pump, and line-flushing/cleaning equipment shall be connected to standby electrical power.

1.2.1.7 Spent Flush Water Collection

- Spent flush water shall be sent to a SDU cell or to the Salt Feed Tank (SFT).

1.2.1.8 Process Vessel Vent System

- Vent gases from equipment handling radioactive material shall be filtered by HEPA filters prior to discharge to atmosphere.
- Process vent blowers shall be connected to standby electrical power.
- Vessels containing radioactive materials shall be maintained at negative pressure with respect to their surroundings.
- There are two independent Process Vessel Vent (PVV) Systems, one for the Process area and the SFT and a second one for the SSRTs.

1.2.2 Structural Requirements

The structures supporting the storage silos, along with all other elevated bins and equipment and the enclosures around tanks, shall be designed to withstand the maximum wind velocities expected at the Savannah River Site (SRS).

1.2.3 System Configuration and Essential Features

Dry bulk materials, including cement, slag, and flyash, shall be stored separately and maintained in a dry condition.

The Clean Cap Batch Tank (CCBT, formerly SSHT), SFT and the SSRTs shall be located outdoors in separate diked areas to contain possible spills and leakage. A weather cover shall be provided for protection and to reduce the amount of rainwater entering the diked areas.

Radiation exposure rates shall be less than 0.5 mrem/hr. for continuous exposure and less than 5 mrem/hr. for intermittent exposure. Exceptions are the Process Room, Salt Feed Tank Area, and the roof of the SDU(s), where access will be controlled in accordance with WSRC 5Q. Shielding shall be provided for routine tank operations if necessary.

Saltstone grout mixing shall be performed indoors in a controlled-access room.

1.2.4 Maintenance Requirements

The Saltstone process system shall be designed for contact maintenance. Accessibility for removal, repair, and replacement of equipment shall be provided.

1.2.5 Surveillance and In-Service Inspection Requirements

The salt solution feed line from the SFT and the Saltstone grout transfer line shall be accessible for inspection to detect possible leakage.

BASIS FOR ACCEPTANCE CRITERIA FOR Z-AREA GROUT PIPE PNEUMATIC LEAK TEST

The acceptance criteria for the grout pipe pneumatic leak test are that the summation of flow through small leaks cannot exceed the flow through a hole of 0.0686 inches in diameter.

The hole size was selected from Inter-Area Transfer Line Pipe Modeling Calculations performed by H-Area for the jacketed portion of the transfer line from the Low Point Pump Pit to the Vitrification Facility (Reference 1). Hole sizes in the calculation for the Low Point Pump Pit to the Vitrification Facility were given for a sharp, square and round edged holes (considered to be orifices). Taking a conservative approach the smallest hole diameter of 0.0686 inches (a round edged hole) was selected.

Since the grout slurry being transported by the grout line is much denser than air, the grout slurry will be less likely to leak out of the pipe than air. This will add additional conservatism to the test. Selecting a small hole diameter and using a less dense test medium will give adequate assurance that the grout pipe will not leak during the transfer of grout to the SDU.

Reference 1: IOM, K. C. Kwon to T. M. Monahon and E. Saldivar, “Inter-area Transfer Line Pipe Modeling Calculations”, HLW-HLE-95-0660, dated November 14, 1995

1.2.6 Instrumentation and Control Requirements

A distributed control system shall control and monitor Saltstone operations. Interlocks and alarms shall ensure proper operation and prevent equipment damage or unsafe operation. A safe shutdown and standby shall be achievable from the operator's console under emergency conditions.

Other important items and features are as follows:

- A Central Control Room (CCR) and local start/stop stations shall be provided for normal operations.
- All system interlocks required for safety of personnel or the environment shall be hard-wired.
- A variety of visual displays shall be obtainable on a CRT in the CCR. Displays shall include process variables, set points, alarm points, and other required operating information. Audible alarms shall also be provided where needed.
- The operator shall be able to start, stop, and adjust process control points and perform other operations required for safe, efficient process control.
- The operator shall be able, at any time, to take over control of an analog process control “loop” unless the loop is designed to prevent takeover for safety reasons or grout quality / process control anomaly prevention.
- Continued normal operation of each process control loop shall not be affected by failure of other control loops, except where interlocked.
- Failure of the automatic mode shall still allow operator control from either the CCR or local facilities.
- The design shall ensure the automatic transfer to a controlled safe standby condition at particular set points and the capability to accomplish a controlled safe shutdown in the event of equipment or component failure.

- The unloading of cement, slag, and flyash shall be controlled locally with only critical operating parameters monitored in the CCR. The rest of the process, including cement, slag, and flyash blending, shall be controlled from the CCR.
- To the extent possible, sensors, electronic components, and similar devices shall be located where they can be readily maintained, calibrated, and/or replaced. Instruments and controls shall be installed outside of regulated areas, when feasible.
- Temperature instrument loops shall consist of thermowell, thermocouple, transducer, digital readout, and alarm.
- Pressure instrumentation loops shall consist of sensor, transducer, digital readout, and alarm. Level instrumentation loops shall have sensor, transducer, digital readout, and alarm.
- Flow instrumentation loops shall consist of sensor, transducer, digital readout, and alarm.
- Variable-speed drives for pumps and conveyors shall have local and remote controls and indicators.
- All remotely operated valves which may contact salt solution or Saltstone grout shall have stainless steel trim and be controlled locally and remotely from the CCR.

1.2.7 System Interfacing Requirements

The Saltstone process interfaces with the following systems:

- G-SD-Z-00001, Z-Area Site, provides space for equipment and pipelines.
- G-SD-Z-00002, Saltstone Structures and SDUs, provides buildings and support structures and receives Saltstone grout.
- G-SD-Z-00004, Saltstone Electrical Power, provides power, grounding, lighting, and heat tracing.
- G-SD-Z-00005, Saltstone HVAC, receives the process vent exhaust.
- G-SD-Z-00006, Saltstone Support, provides utilities and distributed control system (DCS).
- G-SD-Z-00007, Saltstone Product Laboratory, provides analysis of samples.
- Salt Solution Transfer (external interface), provides the salt solution.
- Bulk materials vendor (external interface) provides cement, slag, and flyash.

1.2.8 Quality Assurance Requirements

Quality assurance requirements for SRS activities are outlined in DOE order SR-5700.6B. The Savannah River Quality Assurance Plan, DPW 82-111-2, and the DWPF Project Quality Assurance Plan provide the basis for quality assurance activities for the DWPF. A QA assessment program was performed for the Saltstone facilities. All systems and components were determined to be non-Q.

1.2.9 Code and Standard Requirements

Facilities shall comply with SCDHEC PC-W-1, “Preparation and Submission of Engineering Reports and Environmental Impact Statements,” and SCDHEC PC-SW-2, “Solid Waste Management Regulations.”

1.2.10 Reliability Assurance

[PI1]Instruments and controls necessary for a safe shutdown are on the Uninterruptible Power Supply (UPS) system. These measures ensure that grout can be flushed out of the equipment and a safe shutdown completed. Details of the UPS system can be found in the SSD for Saltstone Electrical (G-SD-Z-00004).

The Saltstone Process Control System (SPCS) provides the necessary hardware, firmware, and software to perform status monitoring, process control, and data acquisition functions on the processes and activities at the Saltstone Facility. The SPCS is a Distributed Control System (DCS) which provides the indication and control function for operation of the Saltstone process and facilities. Discussion of the SPCS/DCS system can be found in the SSD for Saltstone Support (G-SD-Z-00006).

1.2.11 Performance Assessment Requirements

Performance Assessment requirements are driven by DOE Order 435.1, Radioactive Waste Management. DOE Order 435.1 requires a radiological Performance Assessment (PA) be prepared and maintained for DOE low-level-waste facilities for long term protection of the public and environment. A performance Assessment is a risk assessment tool used to assess the fate and transport of waste materials for the purpose of demonstrating that there is reasonable assurance that performance objectives, established for the long-term protection of the public and the environment, will not be exceeded following closure of the facility. The Saltstone Facility shall comply with SRR-CWDA-2011-00196, “Unreviewed Waste Management Question Requirements Document for Saltstone,” SRR-CWDA-2011-00196 provides Saltstone personnel guidance to ensure all proposed activities that may impact the PA are reviewed for compliance with the DOE order.

1.3 DESIGN BASIS RATIONALE

This section is not applicable to this SDD.

2.0 DESIGN DESCRIPTION

The Saltstone process system includes dry bulk material, and salt solution, Saltstone Mixing and Transfer, and SDU filling. Cement, slag, and flyash are unloaded from trucks and pneumatically conveyed to storage silos. The dry solids are discharged from the silos, weighed, and blended to produce a premix. Salt solution is received from H-Area through the inter-area transfer system and stored in a feed tank. The premix and salt solution are fed to a continuous mixer to produce Saltstone grout. The grout is pumped to a SDU, where it hardens to form Saltstone. The Saltstone is a leach-resistant, nonhazardous solid that passes the TCLP test. Simplified Process Flow Diagram is shown in Figure 1

2.1 DETAILED SYSTEM DESCRIPTION

2.1.1 Bulk Material Unloading and Conveying System

Dry bulk materials, consisting of cement, slag, and flyash, are delivered separately in trucks.

The truck unloading system consists of one station (inlet piping and isolation valve) for each of four silos. Dry materials arriving in trucks will be unloaded using blowers supplied by the vendor/shipper. The truck may be connected to a magnetic separator prior to the inlet piping and isolation valve for each of the four silos. There are three magnetic separators, one for each dry material. The magnetic separator is designed to remove foreign material that would be delivered with the dry material.

Four storage silos are provided. Each silo is 22 feet in diameter and 59 feet high with a 17,850 ft^3 volume, which corresponds to at least 7 days storage for each material. The nominal weight capacity of the silos is 1,000 tons for either cement or slag, and 560 tons for the less dense flyash. Two baghouse collectors control dust vented from the receiving silo during a transfer. One collector is mounted on silo #4. The other collector, mounted on silo #2, controls dust vented from silos 1, 2, and 3 through large pipes in the silo roofs between silos 1, 2 and 3. Collected dust is dislodged from the collector bags into the silo on which the collector is mounted.

The bulk material unloading and silo storage is shown in P&ID W754522. Simplified flow diagram of the silo storage is shown in Figure 2.

2.1.2 Premix Blending and Conveying System

Cement, slag, and flyash are each discharged from their storage silos, are weighed separately into batch quantities, and then are combined. This unmixed batch of the three materials then is blended to the compositional uniformity necessary to produce a Saltstone grout having consistent properties after it is later mixed with the salt solution. The blended product, called premix, is transferred to the premix feed bin above the 210-Z Process Building.

The dry materials are discharged from each silo through its discharge valve to an enclosed air slide, one per silo, which conducts the fluidized material down slope to a weigh hopper centrally located under the four silos. Cement, slag, and flyash, each in turn, are weighed to predetermined quantities to achieve a specified ratio in the batch. Fast and slow feed controls enable rapid initial filling of the hopper below, followed by slow filling as the hopper nears its target weight. A passive baghouse collector on the hopper controls the dust generated in this transfer.

The blending panel and programmable logic controller (PLC) in the Central Control Room (CCR) receive weight signals from the weigh hopper load cells and along with the DCS automatically control this process. Three sets of two load cells, each set with one operating and one redundant cell, are mounted 120° apart and support the hopper on its upper circumference. As the predetermined weight of dry material is reached, the weigh hopper feed valves between the air slide and hopper close, and the weigh hopper discharge valve opens. The hopper contents empty by gravity into the idle unit of the two premix blenders located underneath. A passive baghouse collector on each blender controls the dust generated when the material discharges into the blender vessel.

The blenders operate alternately in the batching, mixing, and transferring functions. While one blender is batching or mixing, the second is transferring a blended batch. Three air compressors, two operating and one standby, an air dryer and an air receiver provide the requisite compressed air for the mixing and transferring functions. The design rate is 60 tph for the blend/transfer system when both blenders are operational. When either blender is not operational, the capability exists to operate at half-capacity with the other blender.

Blending is initiated when a batch of the cement, slag, and flyash has been accumulated in one of the blender tanks. Fluidizing air from the air compressors is injected into the tank over a period of time to thoroughly mix the constituents. The blended product is called premix.

When the blending process is complete, the premix batch is transferred to the premix feed bin above the 210-Z Process Building, using a dense-phase pneumatic transfer system. The premix is blown out of the pressurized blending tank when the tank discharge valve opens at a preset pressure. The fluidized material is carried horizontally through a pipeline in a covered trench to the 210-Z Process Building, then upward through the line until it discharges into the top of the premix bin.

The premix blending and conveying system is shown in P&ID's W754524 and M-M6-Z-0044. Simplified flow diagrams of the premix weighing and blending and the premix blending and conveying compressed air supply are shown in Figures 3 and 4, respectively.

2.1.3 Premix Feeder System

Blended premix that has been transferred from the silo area is received in a bin that provides surge capacity for a weighing-feeding system. This feeding system provides a controlled flow of premix to the Saltstone mixer.

The premix is received into the premix feed bin, a conical-bottom 50-ton-capacity cylindrical bin providing 1 to 2 hours' retention in normal operation. A baghouse collector on the premix bin retains the dust vented during the transfer from the blending tanks. Continuous and high level instrumentation monitors the bin level.

The bin discharge cone is steep-angled; three exterior aeration rings at spaced intervals near the bottom outlet assist discharge by injecting air through bin wall openings into the material. The bin discharges from its bottom-cone outlet to the premix weigh bin, first, through a pneumatic slide gate shutoff valve, second, through an air-operated butterfly fill control valve.

The material enters the weigh hopper through a tapered insert nozzle contained within a flexible connection. Air is injected downward along the sides of the nozzle to assist material flow through the constriction. Dust generated by material coming into the hopper is controlled by the premix bin dust collector; the hopper vents into the top of the premix bin above.

The weigh hopper has about an 8-ton capacity and handles up to 50 tph of premix. The hopper is supported on load cells which enable feeding of the solids by dual variable-speed screw feeders on a loss-in-weight basis.

The loss-in-weight signal from the load cells sets the speed of the feeders. The feeder speed is maintained constant during filling of the weigh hopper. Agitators in the hopper bottom facilitate movement of the material into the dual screw feeders contained in the contiguous feeder housing. Material discharged from the feeders passes through a transition hopper that penetrates the regulated process area roof and drops vertically into the Saltstone mixer below.

The premix feeder system is shown in P&ID W754529. Saltstone mixing is shown in P&ID M-M6-Z-0073. A simplified flow diagram of premix feeding is shown in Figure 5.

2.1.4 Salt Solution Feed

Salt Solution Feed can be provided by one of three tanks, the Salt Feed Tank (SFT) or one of the two Salt Solution Receipt Tanks (SSRTs). The Inter-area Transfer line connects to all three tanks and all three tanks can supply the SPF.

The SFT receives salt solution through the inter-area transfer line. [PI2]Sampling capability is provided with an air jet sampler. The tank is vented to the SPF process vent system. Outdoor salt solution lines are electrically heat-traced and insulated to prevent crystallization.

A centrifugal pump and flow control valve feed salt solution to the Saltstone mixer. The salt solution feed rate is controlled based on a ratio to the solids feed rate to the mixer. The typical salt solution grout operational feed rate is between 85 to 95 gpm. A recirculation line and pressure control valve regulate the pressure in the feed line. A water line to the pump primes the pump during startup.

The PVV mist eliminator drain, flush lines from the pig launch 4-way valves, regulated drains from the labs and process room, and the leachate return system are routed to the SFT for disposal.

The SFT is a 6,500-gallon (working volume) carbon steel tank located in a concrete pit adjacent to the 210-Z Process Building. The tank and pit are covered with a roof for weather protection. The floor of the pit is sloped to direct spillage or leakage into a sump. A sump pump transfers any liquid spillage back to the SFT.

The SSRTs receives salt solution through the inter-area transfer line. An agitator mixes the tank contents for sampling and suspends insoluble solids in the salt solutions received. Sampling capability is provided via tubing off the tank recirculation line, to the SSRT Sample Station.

The tank is vented to the SSRT process vent system. Outdoor salt solution lines are electrically heat-traced and insulated to prevent crystallization.

A centrifugal pump and flow control valve feed salt solution to the Saltstone mixer. The salt solution feed rate is controlled based on a ratio to the solids feed rate to the mixer. The typical salt solution grout operational feed rate is between 85 to 95 gpm. A recirculation line and pressure control valve regulates the pressure in the feed line. The SSRT transfer pumps are fed from the bottom of the SSRTs, therefore priming the pump is not required during startup.

Piping for chemical addition system is provided but it is not connected to the chemical storage tanks (see M-M6-Z-00110).

The SSRTs are 60,000-gallon (working volume) carbon steel tank located in a concrete pit adjacent to the CCBT/SFT Building, 201000-Z. The diked area and the tanks are covered with a roof for weather protection. The floor of the cells are sloped to direct spillage or leakage into a sump. A sump pump transfers any liquid spillage back to the SSRT of the affected cell.

Salt solution is considered a hazardous waste due to its corrosiveness (high pH) and chromium content. The salt solution contains about 29 wt% salt and has a density of up to 1.23 kg/l. The salts are primarily sodium nitrate, sodium nitrite, and sodium hydroxide. The primary radionuclides in the salt solution are H-3, Sr-90, Tc-99, Sb-125, and Cs-137. Bounding chemical concentration and radionuclide content of the salt solution may be found in Tables 3.6-6 and 3.6-7, in the Saltstone Facility Documented Safety Analysis (WSRC-SA-2003-00001).

Salt solution feed for the SFT is shown on P&ID M-M6-Z-0074, for the SSRTs it is shown on M-M6-Z-00109. A simplified Saltstone process diagram is shown in Figure 1. Salt Solution flow diagram from SFT is shown in Figure 6, and Saltstone Mixing and Transfer (SSMT) system flow diagram is shown in Figure 7. The Salt Solution Receipt Tank (SSRT) flow diagram is shown in Figure 11.

SFT NFPA 69 Compliance

The salt solution in the Salt Solution Feed Tanks, SFT and SSRTs can generate small amounts of flammable vapor due to the decomposition of tetraphenylborate (TPB) to benzene and radiolysis of water to form hydrogen. The SFT is ventilated by the SPF Process Vessel Ventilation system which has a nominal system flow rate of 150 cfm. The system ventilates three users, the SFT, CCBT, and the Saltstone process. The system is balanced to pull the majority of the flow through the SFT vapor space. The system is reliable as it is designed with redundant blowers and powered from a source provided with a standby diesel generator power supply. The system is also designed such that the standby blower will start automatically upon failure of the operating blower.

The SSRT is ventilated by the SSRT PVV system which has a nominal system flow rate of 220 cfm, for the two SSRTs. The system supports no other equipment of tanks. The system is reliable as it is designed with redundant blowers and HEPA filter banks.

NFPA 69, Standard on Explosion Prevention Systems, provides multiple options for compliance. Chapter 6, Deflagration Prevention by Combustible Concentration Reduction, allows ventilation or air dilution and requires that the combustible concentration be “maintained at or below 25 percent of the LFL.”

S-CLC-Z-00055 - This Engineering Calculation (EC) addressed the times to CLFL for hydrogen, Isopar L and five other flammable gases (ammonia, butanol, isopropanol, methanol, and Norpar 13) in the SFT. For Low Isopar®L operations (<87.5 ppm Isopar L), limitations of SDU flammability caused the hydrogen generation rate to be limited by the WAC (Waste Acceptance Criteria). This EC also conservatively assumed that the total amounts of the organics (butanol, isopropanol, methanol, and Norpar 13) in the salt solution are instantaneously and completely released to the vapor space when ventilation is lost. Henry’s Law was applied to calculate the butanol, methanol and isopropanol concentration in the vapor space. This reduces the concentration of these organics in the vapor space and significantly increases the time to CLFL. Reducing these concentrations in the vapor space allows the total organics present in the salt solution to potentially be increased while remaining below CLFL in the SFT Tank. A sensitivity study was completed to determine the time to CLFL for an organics (butanol, isopropanol, methanol and NORPAR 13) concentration factor of 10X. The worst case time to reach CLFL is 4,605 hours at overflow at this increased organics concentration. The ventilation flowrate required to maintain the vapor space below 25% CLFL based on this calculation is 1.26 scfm.

Therefore, in Engineering's judgment, the air purge rate provided by the Process Vessel Vent system is adequate to ensure compliance with NFPA 69 requirements to maintain the SFT vapor space flammability at less than 25% of the LFL.

For SSRTs an explosion of the SSRTs due to a loss of the SSRT PVVS during the normal operating conditions of a temperature ≤ 40°C is assumed to not be credible. Following the loss of the SSRT PVVS, the time to reach CLFL with no diurnal breathing at the maximum normal operating temperature of 40°C is > 1 year. This duration provides ample time for the
facility to respond and restore the SSRT PVVS prior to reaching flammable conditions. (See Ref 7.1.2.2, S-CHA-Z-00001, Assumption 13). Per the PFHA and the Flammability Analysis (see F-PFHA-Z-00001, Ref 7.1.2.3 and S-CLC-Z-00073, Ref 7.1.2.4) in order to meet NPFA 69, Chapter 8, "Combustible Concentration Reduction method for Deflagration mitigation", it has been determined that the ventilation required to maintain the vapor space below 25% CLFL based on this calculation is 3.26 scfm. With no ventilation >100 days required to reach CLFL.

2.1.5 Clean Cap Batch Tank

The Clean Cap Batch Tank (CCBT) supplies inhibited water to the Saltstone process for the purposes of making clean cap grout and flushing process equipment. This inhibited water is made via process water supply to the CCBT and a 50% sodium hydroxide (caustic) chemical addition station situated to the west side adjacent to the CCBT dike. An agitator mixes the tank contents. Sampling capability to determine tank pH is provided with an air jet sampler. The tank is vented to the process vent system. Outdoor inhibited water lines are electrically heat-traced and insulated to prevent crystallization.

A vertical centrifugal pump and flow control valve feed inhibited water to the Saltstone mixer. The inhibited water feed rate is controlled based on a ratio to the solids feed rate to the mixer. The typical inhibited water operational feed rate is 80 to 85 gpm when making clean cap grout and 85 to 95 gpm prior to making radioactive grout. A recirculation line and pressure control valve regulate the pressure in the feed line. A water line to the pump primes the pump during startup.

The CCBT is a 45,000-gallon (working volume) carbon steel tank located partially below grade in a concrete pit adjacent to the 210-Z Process Building. The tank and pit are covered with a roof for weather protection. The floor of the pit is sloped to direct spillage or leakage into a sump. A sump pump transfers any liquid to the CCBT or to the Salt Feed Tank (SFT).

The CCBT is shown on P&ID W775553 and W775554. A simplified Saltstone process diagram is shown in Figure 1. A Saltstone Mixing and Transfer system flow diagram is shown in Figure 7.

2.1.6 Saltstone Mixing

The Saltstone mixer receives salt solution and premix (cement, slag, and flyash) and mixes them to produce the Saltstone grout. The premix is gravity fed from a loss-in-weight feeder. Salt solution is fed into the mixer at a flow rate based on the premix feed rate. The mixer is a continuous, twin-screw mixer. The grout production rate is about 150 gpm. Nominal composition of Saltstone is shown in Table 2.1-1. Figure 10 shows Saltstone mixing feed controls.

Table 2.1-1. Saltstone Composition

Component	Nominal (wt%)	Range (wt%)
Salt Solution	47	40-50
Cement	3	0-10
Slag	25	10-40
Flyash	25	10-40

The combination of the SDU and waste form meets the disposal criteria for Class C waste because it provides protection against leaching, subsidence, and inadvertent intrusion. Specific gravity is about 1.7.

The Saltstone mixer discharges the grout to the grout hopper, a 450 gallons capacity stainless steel vessel with an agitator and cone bottom discharge outlet to minimize grout buildup. The grout hopper provides a surge capacity for the grout pump and dampens process control oscillations. This ensures a flooded suction to the pump and prevents pumping a grout-air mixture that could disturb process instrumentation. Spray nozzles are provided inside the hopper for flushing purposes. The hopper has two level instruments.

A radar transmitter level device is provided to detect the grout level in the hopper. A dip tube level device is provided for a high-high-level alarm.

Saltstone mixing is shown in P&IDs M-M6-Z-0073, and M-M6-Z-0074, M-M6-Z-0075 and M-M6-Z-00109.

2.1.7 Saltstone Transfer and SDU Filling

The grout pump is provided to transfer grout to the Saltstone SDU. The pump is a double-acting, positive displacement peristaltic pump rated at up to 180 gpm. The pump draws grout from the hopper and delivers it to the SDU manifold downstream of the pig launching stations. Saltstone grout is pumped from the 210-Z Process Building to a Saltstone SDU through the grout transfer line. The transfer line is constructed of API 5L galvanized steel pipe or ASTM A513 mechanical round tubing with a 3-inch internal diameter and a wall thickness of 1/4 inch. The pipe sections are joined together with Victaulic Zero-flex couplings or ASME B16.5 Class 300 flanges. The grout transfer line is protected from over pressurization by an in-line Rupture Pin. The Rupture Pin will release pressure from the system by faulting at a pressure above 290 psi, thereby releasing grout into a Saltstone hopper overflow container (SHOC) and preventing release to the environment. The pipeline exits the east side of the process building in a covered concrete trench, rises out of the trench, and runs along grade to the SDU. Portions of the grout transfer pipe are provided with shielding. The length of the pipeline can vary between 1,500 and 3,500 feet, depending on the location of the SDU. This grout transfer line has been blanked to SDUs 2 and 5 and is physically disconnected (air gap) to SDU 4. SDUs 2, 4, and 5 will not be receiving any more radioactive or clean cap grout because SDUs 2 and 5 are operationally filled and SDU 4 is inactive. Additionally, SDU 4 Cells B, D, E, F, H, J, K, and L have been previously clean capped from an external source.

SDU 4 consists of two units, each 200 feet by 300 feet. Each unit is subdivided into six 100 feet by 100 feet reinforced concrete cells. The SDU has overall dimensions of 200 feet by 600 feet with an average interior height of 27 feet. SDU 2, SDU 3 and SDU 5 each consists of two reinforced concrete cells A and B, each 150 feet in diameter, with a side wall height of 22 feet and a center height of 23.5 feet. One cell is filled at a time. SDU 6 consists of a single reinforced concrete cell with an average internal diameter of approximately 375 feet and a total height of approximately 43 feet (wall and center). A sloped roof prevents rainwater from diluting and

altering the composition of the grout being poured. See SDD G-SD-Z-00002, Saltstone Structures and SDUs, for SDU and roof details.

[PI3]
For SDU 3 the Saltstone grout discharges into the approximate center of the SDU cell and is self-leveling. The cell is filled with grout to a maximum fill height level per TSR limit or as limited by the Fire Hazard Analysis. SDU 3 has three grout height indicators, which are installed on 3 internal columns. Discharge of the grout and filling of the cell can be observed from the CCR with a closed circuit television (CCTV). The SDU 3 columns have level markings and lighting is provided on the CCTV camera. The CCTV has remote zoom, pan, and tilt features. The temperature of the Saltstone monolith is monitored by a thermocouple assembly that was placed in the cell prior to filling. A new assembly is provided for each cell. The combination of the Saltstone waste form and the concrete SDU limits migration of the chemical and radioactive constituents such that the groundwater at the disposal site boundary will meet drinking water standards. After a cell has been filled with Saltstone and a clean, personnel protection layer placed, the transfer line is rerouted to the next SDU cell to be filled via valving located on the SDU roof. Due to concerns regarding degraded grout quality from heat of hydration, cells may be filled in stages and multiple clean caps may be required for shielding.

For SDU 6, the Saltstone grout discharges through one of nine pour ports into the SDU and is self-leveling. The SDU is filled with grout to the maximum grout height level per SAC. The SDU has at least two grout height indicators per pour port, which are installed on internal columns. Discharge of the grout and filling of the SDU can be observed from the CCR with a CCTV. The SDU wall (single marker at fill height) and columns have level markings and lighting is provided on the CCTV camera. The CCTV camera has remote zoom, pan, and tilt features. The temperature of the Saltstone monolith is monitored by thermocouple assemblies that were placed in the SDU prior to filling. The combination of the Saltstone waste form and the concrete SDU limits migration of the chemical and radioactive constituents such that the groundwater at the disposal site boundary will meet drinking water standards. After a pour port has reached the maximum grout height level per SAC, the transfer line is rerouted to the next SDU 6 pour port to be filled via valving located on the SDU roof. This continues until the average fill height across the entire SDU 6 reaches maximum grout height level per SAC. Due to concerns regarding degraded grout quality from heat of hydration, SDU 6 may be filled in stages and multiple clean caps may be required for shielding.

Saltstone transfer is shown on P&IDs M-M6-Z-0075, M-M6-Z-0032, M-M6-Z-0045, M-M6-Z-00117 and M-M6-Z-00118, and M-M6-Z-00128.

2.1.8 Pig Cleaning of the Grout Transfer Line

The pig launching system is used to clean the grout transfer line at the end of a production run or in the event of an abnormal system shutdown. A pig is a 3-1/8 in. dia. rubber ball that is propelled through the transfer line by compressed air. The pig pushes the grout out of the pipeline, wipes the pipe walls, and drops into the SDU.

There are two pig launchers: a primary launcher and a backup launcher. They are located downstream of the transfer pump. The backup launcher is used if the primary launcher fails or if the pig launched from the primary launcher fails to exit the grout transfer line.

A pig is loaded by removing a threaded cap and placing the pig into the launcher. To launch a pig, the pig launcher ball valve opens and the pig drops into the launching section. The ball valve closes and the launching section is pressurized with compressed air to propel the pig into the grout transfer line.

The pig discharged from the launcher enters the grout transfer line through a four-way valve. The valve has two positions. The first position (grout transfer) aligns the pump discharge with the transfer line to the SDU and aligns the pig launcher with the SFT. The second position (pig launch) aligns the pig launcher with the transfer line to the SDU and aligns the pump discharge with the SFT. Figure 9 shows the valve positions.

Compressed air for propelling the pig is provided by the pig launching air system. Two 60 ft^3 air accumulators receive approximately 300 psi air from the compressor. Each accumulator is dedicated to a single pig-launching unit. The accumulator air supply valve is closed before the discharge valve is opened. The accumulator contains sufficient air for one pig launching operation. Water can be manually added to the accumulator with a hose in order to adjust the volume of air provided. A back-up air supply consisting of compressed air bottles is also provided.

Pig launching is shown in P&IDs M-M6-Z-0032, W775558, and M-M6-Z-0045.

2.1.9 Salt Feed Tanks

Presently there are three salt receipt tanks that can be used to receive salt waste and to feed the grout mixer. There are two SSRTs and one SFT. The SSRTs will be the primary salt receipt tanks and feed source for the mixer. The SFT will primarily be a receipt tank for SDU drainwater, and flush or recycle water.

The SFT can receive salt solution for feed to the Saltstone Mixing and Transfer system equipment. The SFT's primary role is to receive drainage from the process vent system, the 210-Z Process Building drains, and the 704-Z Operations Building regulated drains, including lab hoods, sinks, and decon showers and the discharge of the leachate return system pumps. [PI4]An air jet sampler is provided for collecting liquid samples. The SFT is provided with liquid level instrumentation. The SFT is vented to the SPF process vent system.

The SFT is a 6,500-gallon (useable volume) carbon steel tank located below grade in a concrete pit adjacent to the CCBT. A common roof covers both the CCBT and the SFT. The floor of the pit is sloped to direct spillage or leakage into a sump. A sump pump is provided for transferring liquid into the SFT.

The Salt Feed Tank is shown in P&ID M-M6-Z-0074.

The SSRT receives salt solution for feed to the Saltstone Mixing and Transfer equipment. The SSRT also receives flush and recycle waste and can receive material from the SFT. The SSRT is provided with an agitator that runs to keep solids in suspension. An air jet sampler is provided for collecting liquid samples. The SSRT is provided with liquid level and temperature instrumentation. The SSRTs are vented to the SSRT process vent system.

The SSRT is a 60,000-gallon (working volume) carbon steel tank located on grade in a concrete cell adjacent to the CCBT/SFT. A roof covers SSRTs and adjacent pump gallery. The floor of the cells are sloped to direct spillage or leakage into one of two sumps. Sump pumps are provided for transferring liquid into the respective SSRT.

The SSRTs are shown on P&ID M-M6-Z-00109.

2.1.10 Deleted

2.1.11 Process Vent Systems

The Saltstone Facility has two independent PVV Systems. One is specifically for the SSRTs (SSRT PVV system) and the other (SPF PVV system) is for the rest of the plant.

The CCBT, grout pump overflow container and hopper and the SFT vent system are vented to the SPF PVV system. The grout pump hopper and overflow container head spaces are connected via the hopper overflow pipe. Manual valves in each vent line are adjusted as necessary to maintain the proper vacuum in the equipment being vented. This system consists of a mist eliminator, heater, two HEPA filters in parallel, and two 150 cfm blowers in parallel. One HEPA filter and one blower are on-line while the others are on standby. Figure 8 shows vent path through SFT Vent System.

The mist eliminator receives the vent stream from the CCBT and SFT. Pressure drop across the mist eliminator is monitored and a water flush is provided for washing the mesh pad. The mist eliminator drains to the SFT.

The stream enters the process vent heater. The heater raises the temperature of the stream by about 10°C to prevent condensation in the HEPA filter.

The vent stream then flows through one of two HEPA filters. One filter is operating while the other is on standby. The pressure drop across the filter is monitored, and high and low alarms are provided.

The vent stream enters one of two 150 cfm vent blowers. One blower is operating while the other is on standby. Flow is measured upstream of the blowers. A low-flow interlock automatically starts up the standby blower. The blower exit piping is equipped with a silencer and the gas is discharged to the 210-Z Process Building HVAC stack.

The process vent system is shown in P&ID W775555.

The SSRTs are vented to the SSRT PVV system. Manual valves in each vent line and blower VFDs can be adjusted as necessary to maintain the proper vacuum and flow in the equipment being vented. This system consists of a mist eliminator, heater, two HEPA filters in parallel, and two, 3 HP blowers in parallel. One HEPA filter and one blower are on-line while the others are in parallel and available as needed. Figure 12 shows vent path through SSRT PVV system.

The mist eliminator receives the vent stream from the SSRTs. Pressure drop across the mist eliminator is monitored and a water flush connection is provided for washing the mesh pad. The mist eliminator drains to the SSRT.

The stream enters the process vent heater. The heater raises the temperature of the stream by about 10°C to prevent condensation in the HEPA filter.

The vent stream then flows through one of two HEPA filters. One filter is operating while the other is available as needed. The pressure drop across the filter is monitored, and high and low alarms are provided.

The vent stream enters one of two SSRT PVV blowers. One blower is operating while the other is available as needed. Flow is measured upstream of the blowers. There is no automation to cause an automatic swap over to

the other blower on low flow or interlocks on low flow to shut off the processing. The blower exit piping is discharged above the roof of the SSRT structure.

The SSRT PVV system is shown in P&ID M-M6-Z-00132.

2.1.12 High Pressure Flush System

A flush pump is provided to flush the grout line downstream of the grout pump, if required. The pump is a horizontal centrifugal pump rated at 125 gpm.

The pump draws process water from the process water header and delivers it to the discharge of the grout pump, via a 3-way valve which isolates the pump discharge from the flush path. This pump will attempt to move grout down the transfer line to a point where a pig may be launched to clear the line in the event of a grout pump failure.

The high pressure flush system is shown in P&ID M-M6-Z-0075.

2.2 SYSTEM PARAMETERS AND PERFORMANCE CHARACTERISTICS

The Saltstone process throughput is based on the following parameters:

- Annual salt solution throughput: $\leq$6 million gallons
- Operating time: 9 hr/day, 3 days/wk, 52 wk/yr
- Attainment: 71 percent

Attainment is defined as the fraction of the operating time that the Saltstone process is running and producing grout.

System operating parameters are as follows:

- SFT & SSRT temperature: 10-40°C
- Salt solution feed rate: 70-125 gpm
- Premix feed rate: 30-45 tph
- Saltstone mixer output: 180 gpm max.
- Saltstone grout pump flow rate: 180 gpm max.
- Saltstone grout transfer line velocity: 7.5 ft/sec
- SSRT PVV system flow rate: 220 cfm
- SPF PVV system flow rate: 150 cfm

2.3 SYSTEM ARRANGEMENT

The bulk materials handling facilities are located in the yard both west and above the 210-Z Process Building. The major facilities include the bulk unloading and transfer systems, the silo storage and blending systems, and the premix feeder system. These systems are connected by dry material transfer lines contained mostly within plate-covered trenches. The bulk unloading and conveying system (abandoned in place) are adjacent to the railroad tracks which constitute the west border of Z-Area, directly west of the north wall of the 210-Z Process

Building. The silo storage and blending systems structure is east of the unloading area, approximately 100 feet east of the railroad unloading track. The premix feeder system is approximately 200 feet further east, on a structure directly above the 210-Z Process Building. The Z-Area plan of the operations area is shown in Drawing W780452.

The silos/blenders structure is centered 100 feet east of the unloading track centerline. It is an elevated 104-foot-high steel structure supporting, from top to bottom, four storage silos, a weigh hopper, and two blenders. Stairs and platforms provide access to the silo discharge cones, air slides, weigh hopper, blenders, and blender dust collectors. Equipment on top of the silos is accessed by stairs on the east side, supported on the slag and cement silos. Immediately to the east of the structure is a concrete pad on which the three blender air compressors and ancillaries are mounted, together with their surge tank. The premix pneumatic conveyor pipe course is to the east in a covered trench, going 231 feet to the northeast corner of the 210-Z Process Building, before turning south 84 feet, then west 34 feet and up 75 feet into the premix bin. This silo/blender facility is shown in Drawings W775921, W775922, W775925, W775926, W775927, and W775928.

The premix feeder system components are mounted on an elevated steel structure above the regulated process portion of the 210-Z Process Building. This structure supports, from the top, the premix feed bin, the premix weigh hopper, and two premix screw feeders. The feeder discharges through the process building roof into the Saltstone mixer. The equipment in this facility is shown in Arrangement Drawings W775901, W775902, W775903, and W775905.

The CCBT, SFT, PVV and transfer line depressurization system (abandoned in place), are located in the yard east of the 210-Z Process Building. The CCBT is located in a 33 ft by 33 ft by 16 ft deep pit that can hold up to 70,000 gallons of liquid. The SFT is located in an adjacent pit that measures 20 feet by 20 feet by 24 feet deep, and can hold up to 15,000 gallons of liquid. The walls of each pit extend about 8 feet above grade. A common roof covers both pits and tanks for weather protection and to reduce the amount of rainwater entering the pit. The platforms above the tanks contain radiation shielding. This ensures that radiation dose rates are lowered to levels that can be accommodated for infrequent maintenance evolutions. The process vent system (PVV) is at grade adjacent to the pits and is located under the common roof. The layout is shown in Drawings W775910, W775911, and W775912.

The SSRTs, Z-201001-SSRT-TK-0001 and 0002, are located in two cells, built on grade, approximately 35 ft by 35 ft by 24 ft deep. On the east side of the two tank cells is a pump room. This too, is built on grade approximately 35 ft by 17 ft by 24 ft. The west cell has its own sump. The center cell sump also connects to the pump room. The sumps are approximately 4ft by 5 ft by 3.33ft, or about 500 gallons. The cells and pump room are covered by 0.5 in. of plate steel and the whole structure is covered by a common roof. The SSRT PVV system is located on the steel platform above the SSRTs. The layout is shown in Drawings C-CC-Z-00033, C-SP-Z-00001, and C-SS-Z-00001.

The Saltstone mixer, hopper, rupture pin, transfer and flush pumps, pig launchers, and hopper overflow container (SHOC) are located in the regulated process area in the 210-Z Process Building. A 5-ton underhung crane is provided in the regulated process area. The layout is shown in Drawings W775900 through W775905, W775907, and W775908.

2.4 COMPONENT DESIGN DESCRIPTIONS

This section provides a description of key components. Reference drawings for components are listed in Table 2.4-1.

2.4.1 Railcar Unloading and Conveying

Not used, abandoned in place.

Table 2.4-1 Equipment References

Equipment No.	Description	Assembly Dwg	Data Sheet	Performance Curve	Install, Oper., & Maint. Manual
Z205000-BMH-TK-0001	Silo #1	MT21218-(1-9)	MT21218-80	NA	MT21218-77
Z205000-BMH-TK-0001	Silo #2	MT21218-(1-9)	MT21218-80	NA	MT21218-77
Z205000-BMH-TK-0001	Silo #3	MT21218-(1-9)	MT21218-80	NA	MT21218-77
Z205000-BMH-TK-0001	Slag #4	MT21218-(1-9)	MT21218-80	NA	MT21218-77
Z205000-BMH-DCOL-0001	Silo 1/2/3 Vent Dust Collector	MH21144-44,45	MH21144-51	NA	NA
Z205000-BMH-DCOL-0002	Silo 4 Vent Dust Collector	MH21144-44,45	MH21144-52	NA	NA
Z205000-BMH-HCV-1232-1235	Silo Cutoff Valves	NA	MH21142-55	NA	MH21142-17,88
Z205000-BMH-CNVR-0001	Silo #1 Air Slide	MH21142-21	MH21142-55	NA	MH21142-17,88
Z205000-BMH-CNVR-0002	Silo #2 Air Slide	MH21142-21	MH21142-55	NA	MH21142-17,88
Z205000-BMH-CNVR-0003	Silo #3 Air Slide	MH21142-21	MH21142-55	NA	MH21142-17,88
Z205000-BMH-CNVR-0004	Silo #4 Air Slide	MH21142-21	MH21142-55	NA	MH21142-17,88
Z205000-BMH-CNVR-0005	Premix Air Blender/Conveyor #1	MH21142-52	MH21142-59	NA	MH21142-17,88
Z205000-BMH-DCOL-0004	Premix Air Blender #1 Dust Collector	MH21142-80	NA	NA	MH21142-17,88
Z205000-BMH-CNVR-0006	Premix Air Blender/Conveyor #2	MH21142-52	MH21142-59	NA	MH21142-17,88
Z205000-BMH-DCOL-0005	Premix Air Blender #2 Dust Collector	MH21142-80	NA	NA	MH21142-17,88
Z205000-BMH-HPR-0001	Batch Weigh Hopper	MH21142-48	MH21142-60	NA	MH21142-17,88
	&Load Cell	MH21142-37	MH21142-60	NA	MH21142-17,88
Z205000-BMH-DCOL-0003	Weigh Hopper Dust Collector	MH21142-79	MH21142-58	NA	MH21142-17,88
Z205000-PRA-CMP-0001	Premix Air Blender Air Compressor #1	MH21142-46,47	MH21142-56,57	MH21143-68	MH21142-71,88
Z205000-PRA-CMP-0001	Premix Air Blender Air Compressor #2	MH21142-46,47	MH21142-56,57	MH21143-68	MH21142-71,88
Z205000-PRA-CMP-0001	Premix Air Blender Air Compressor #3	MH21142-46,47	MH21142-56,57	MH21143-68	MH21142-71,88
Z205000-PRA-MSR-	Aftercooler &	MH21142-69	NA	NA	MH21142-71,88
0001/0002/0003	Moisture Separator	MH21142-70	NA	NA	MH21142-71,88
Z205000-PRA-DRY-0004	Air Dryer				
Z205000-PRA-TK-0001	Air Surge Tank	MH21142-51	MH21142-51	NA	MH21142-17,88
Z210000-BMH-TK-0005	Premix Feed Bin	MH21143-15	MH21143-7	NA	MH21143-25
Z210000-BMH-DCOL-0006	Premix Feed Bin Dust Collector & Fan	MH21142-81 MH21142-76	MH21142-58	NA MH21142-97	NA
Z210000-BMH-HPR-0002	Weigh Hopper with Load Cells	MH21143-15	MH21143-8	NA	MH21143-25
Z210000-BMH-FDR-0001	Premix Screw Feeder #1	MH21143-14	MH21143-9	NA	MH21143-25

Table 2.4-1 Equipment References (Cont'd)

Equipment No.	Description	Assembly Dwg	Data Sheet	Performance Curve	Install, Oper. & Maint. Manual
Z210000-BMH-FDR-0002	Premix Screw Feeder #2	MH21143-14	MH21143-9	NA	MH21143-25
Z210000-BMH-AGT-0001	Premix Weigh Hopper Agitator #1	MH21143-70	MH21143-60	NA	MH21143-25
Z210000-BMH-AGT-0002	Premix Weigh Hopper Agitator #2	MH21143-70	MH21143-60	NA	MH21143-25
Z205000-UNLD-LOS-0301	Local Operating Station, LOS-301	MH21144-9	NA	NA	MH21144-56
Z210000-BMH-LOS-0303	Local Operating Station, LOS-303	MH21143-3	NA	NA	MH21143-25
Z210000-BMH-LOS-0302	Local Operating Station, LOS-302	MH21142-18	NA	NA	NA
Z205000-BMH-LOS-0327	Local Operating Station, LOS-327	NA	NA	NA	NA
Z210000-BMH-CAB-0008	Speed Control Cabinet	MH21143-29	NA	NA	MH21143-25
Z201000-CCBT-TK-0001	Clean Cap Batch Tank	MT21219-17(1)			
Z201000-CCBT-P-0001	Clean Cap Feed Pump	MG20633-10			MG20633-50
Z201000-CCBT-P-0002	CCBT Sump Pump	MG20613-1(33)		MG20613-115	MG20613-78
Z201000-CCBT-SNK-0001	CCBT Cold Sampler	MH20924-3			
Z201000-PVV-FLT-0020	Mist Eliminator	MH21114-1	NA	NA	NA
Z201000-PVV-FLT-0027	Process Vent HEPA Filter No. 1	MB20000-33	MB20000-30	NA	MB20000-19
Z201000-PVV-BLO-0001	Process Vent Blower No. 1	MB21037-38	MB21037-34	MB21037-36	MB21037-53
Z201000-PVV-FLT-0037	Process Vent HEPA Filter No. 2	MB20000-33	MB20000-30	NA	MB20000-19
Z201000-PVV-BLO-0002	Process Vent Blower No. 2	MB21037-38	MB21037-34	MB21037-36	MB21037-53
Z201000-PVV-HTR-0050	Process Vent Heater	Field Purchase (DCF-6243, PCN 264014)			
Z210000-SSMT-MIX-0001	Saltstone Mixer	WB02377A Sheet 2 1	M-DS-Z-00044	NA	WB02377A
Z210000-SSMT-P-9001	Grout Transfer Pump	SRRA045580	M-DS-Z-00008	NA	SRRA045580
Z210000-SSMT-AGT-9010	Grout Pump Hopper Agitator	SRR3048-11 Sheet 3	M-DS-Z-00048	NA	SRR3048-11 Sheet 1,2
Z210000-SSMT-VSL-9002	Pulsation Dampener	WB02376 Sheet 1	M-DS-Z-00045	NA	WB02376 Sheet1
Z210000-SSMT-VSL-9003	Pulsation Dampener	WB02376 Sheet 1	M-DS-Z-00045	NA	WB02376 Sheet1

Table 2.4-1 Equipment References (Cont'd)

Equipment No.	Description	Assembly Dwg	Data Sheet	Performance Curve	Install, Oper, & Maint. Manual
Z210000-SSMT-P-0007	Flush Pump				
Z210000-PIG-EJR-0001	Pig Launching Station #1	NH21183-1	NA	NA	NH21183-47
Z210000-PIG-EJR-0002	Pig Launching Station #2	NH21183-1	NA	NA	NH21183-47
Z210000-PIG-ACC-0001	Air Accumulator No. 1	MH20990-78	MH20990-75	NA	NA
Z210000-PIG-ACC-0002	Air Accumulator No. 2	MH20990-85	MH20990-83	NA	NA
Z201000-SFT-TK-0001	Salt Feed Tank	MT21214-1(1)	MT21214-23	NA	NA
Z201000-SFT-P-0001	Salt Feed Tank Pump		KJ35354A-1	KJ35354A-2	KJ35354A-7
Z201000-SFT-P-0002	Salt Feed Tank Sump Pump	Field Purchase			
Z201000-SFT-AGT-0001 (Placed in Long-Term Isolation per S4-OPS-19)[PI5]	Salt Feed Tank Agitator	Field Purchase (DCF-7263)			
Z201000-SFT-SNK-0001	SFT Cold Sampler	MH20924-3	NA	NA	NA
Z201000-CCBT-AGT-0001	CCBT Agitator	Field Purchase			
Z-210000-SSMT-TK-9000	Grout Pump Hopper	M-MF-Z-00001	M-DS-Z-00056	NA	NA
Z-210000-SSMT-TK-9004	Grout Pump Overflow Container	C-CM-Z-00012	NA	NA	NA
Z-210000-SSMT-PSV-8012	Rupture Pin	P-PA-Z-0009	M-RVD-Z-00076	N/A	AC51718A-001-A-AT6
Z-201001—SSRT-TK—000l	SALT SOLUTION RECEIPT TANK #1	ARRA000376 sh 93	M-DS-Z-00026	ARRA000376 sh 125	ARRA000376 sh 171, 168
Z-201001—SSRT-TK—0002	SALT SOLUTION RECEIPT TANK #2	ARRA000376 sh 93	M-DS-Z-00026	ARRA000376 sh 125	ARRA000376 sh 171, 168
Z-201001—SSRT-P—0001	SSRT #1 Transfer Pump	WB02027A sh 018, 010	M-DS-Z-00027 WB02027A sh 09	WB02027A sh 013, 015, 017, 025	WB02027A sh 023, .27
Z-201001—SSRT-P—0002	SSRT #2 Transfer Pump	WB02027A sh 018, 010	M-DS-Z-00027 WB02027A sh 09	WB02027A sh 013, 015, 017, 025	WB02027A sh 023, .27
Z-201001—SSRT-P—0003	SSRT #1 Sump Pump	WB02027A sh 004	M-DS-Z-00035 WB02027A sh 006	WB02027A Sh 007, 026	WB02027A Sh 008
Z-201001—SSRT-P—0004	SSRT #2 Sump Pump	WB02027A sh 004	M-DS-Z-00035 WB02027A sh 006	WB02027A Sh 007, 026	WB02027A Sh 008
Z-201001—SSRT-AGT—0001	SSRT #1 Agitator	WB01455A sh 003 WB01407A sh 001	WB01455A Sh 044	WB01455A sh 002	WB01455A sh 046
Z-201001—SSRT-AGT—0002	SSRT #2 Agitator	WB01455A sh 003 WB01407A sh 001	WB01455A Sh 044	WB01455A sh 002	WB01455A sh 046
Z-201001—SSRT-TK—0003	SSRT #1 Transfer Pump Buffer Fluid TK	WB02027A sh 24,	WB02027A sh 024	NA	NA
Z-201001—SSRT-TK—0004	SSRT #2 Transfer Pump Buffer Fluid TK	WB02027A sh 24	WB02027A sh 024	NA	NA
Z-201001—SSRT-SNK—0002	SSRT Sample Station	P-PM-Z-00025	NA	NA	NA
Z-201001-PVV-FLT-0016	INLET HEPA FILTER SSRT 1 - PVV SYSTEM	SRRA033192 sh 003	M-DS-Z-00080 J-JD-Z-00276	NA	NA
Z-201001-PVV-FLT-0019	INLET HEPA FILTER SSRT 2 - PVV SYSTEM	SRRA033192 sh 003	M-DS-Z-00080 J-JD-Z-00276	NA	NA

Equipment No.	Description	Assembly Dwg	Data Sheet	Performance Curve	Install, Oper, & Maint. Manual
Z-201001-PVV-PSV-7600	VACUUM BREAKER SSRT 1 - PVV SYSTEM	M-RVD-Z-00095	M-RVD-Z-00095	M-RVD-Z-00095	M-RVD-Z-00095
Z-201001-PVV-PSV-7602	VACUUM BREAKER SSRT 2 - PVV SYSTEM	M-RVD-Z-00095	M-RVD-Z-00095	M-RVD-Z-00095	M-RVD-Z-00095
Z-201001-PVV-DMST-0001	MIST ELIMINATOR SSRT 1 - PVV SYSTEM	SRRA032501 sh 002	M-DS-Z-00083	SRRA032501 sh 004	SRRA032501 sh 003
Z-201001-PVV-DMST-0002	MIST ELIMINATOR SSRT 2 - PVV SYSTEM	SRRA032501 sh 002	M-DS-Z-00083	SRRA032501 sh 004	SRRA032501 sh 003
Z-201001-PVV-FLT-1100	EXHAUST HEPA FILTER SSRT - PVV SYSTEM	SRRA033688 sh 004	M-DS-Z-00081	SRRA033688 sh 008, 019	SRRA033688 sh 020
Z-201001-PVV-FL-1101	EXHAUST HEPA FILTER SSRT - PVV SYSTEM	SRRA033688 sh 004	M-DS-Z-00081	SRRA033688 sh 008, 019	SRRA033688 sh 020
Z-201001-PVV-EHTR-1102	EXHAUST FILTER HEATER SSRT - PVV SYSTEM	SRRA033688 sh 009, 012	J-JD-Z-00279	SRRA033688 sh 020	SRRA033688 sh 020
Z-201001-PVV-BLO-1200	EXHAUST BLOWER SSRT - PVV SYSTEM	SRRA033342 sh 002, 014	M-DS-Z-00082	SRRA033342 sh 006	SRRA033342 sh 011
Z-201001-PVV-BLO-1201	EXHAUST BLOWER SSRT - PVV SYSTEM	SRRA033342 sh 002, 014	M-DS-Z-00082	SRRA033342 sh 006	SRRA033342 sh 011

2.4.2 Cement, Flyash, and Slag Storage Silos

The four storage silos are 22 feet in diameter and 59 feet high from the bottom of the discharge cone to the top of shell. The carbon steel silos were supplied and fabricated by CBI Services, Inc. The top four courses of the shell are 1/4 inch thick, and the bottom course is 5/16 inch. The bottom discharge cone is 21 feet high with a 72 in. dia. outlet; it is 3/8 inch thick, except the top 2 feet, which is 7/16 inch. The silo tops have 10° conical roofs, 0.38 inch thick. Design internal pressure is 4 psig. Each silo is provided with a guided level radar measuring system and a vibrating high-level switch.

The silo vent dust collectors are identical PulseJet HPS55 baghouse collectors, each with a 10 hp blower rated 1,410 acfm at 200°F and 6 in. WC. The filter cloth area is 470 ft^2 with 55 felt fabric filter bags, each 6 inches in diameter by 8 feet long. The filter bags are cleaned by reversed air pulse. Sequential controllers with photohelic gages/switches control the cleaning cycle. These collectors were furnished by Halliburton with the railcar unloading and conveying system.

2.4.3 Premix Blending and Conveying System

Each of the silos is discharged through an air-activated bin discharger cone which is supported from the silo cone by a 72 in. dia. flanged connection. Air is supplied at three locations on the cone from a single line with a solenoid-operated shutoff valve. Each supply point has a pressure regulator and a rotameter. The bottom outlet is a short section of 12 in. dia. pipe with a flange. Between this and the air slide inlet is an air-operated 12 in. dia. butterfly valve, with open-close limit switches controlled from the bottom of the silos.

The four (silo) air slides are 12 inches wide and 15 feet long, endplate to endplate. Feed drops vertically into each enclosed unit from the silo above through a short 12 in. dia. pipe onto the polyester membrane media. Fluidizing air at 4 psig enters the air chamber under the membrane through two 1 in. dia. pipes and carries the material at 10° down slope to a vertical 12 in. dia. flanged outlet near the lower end. Each air slide requires 180 scfm of air.

Two air-operated 12 in. dia. butterfly valves are mounted between the air slide discharge and the hopper inlet opening for each of the four silos. The Upper feed valves HCV-1269, HCV-1270, HCV-1274, and HCV-1276 control the flow of dry material into the hopper. These valves have three-position switches and two solenoid actuators to enable fast feed and slow feed positions. The lower valve has one solenoid actuator and functions on an open-close basis for isolation and maintenance.

The batch weigh hopper is a conical-bottom bin 8 feet in diameter at the top and 10 feet in overall depth. Its volume is 115 ft^3 and construction is 3/16 in. thick carbon steel plate. Approximate full weight is 10,670 lb. The top is flat and has four 14 in. dia. openings arranged radially at 90° intervals near the outside edge to receive the discharge from the air slides. There is also the dust collector mounting opening and an access hatch. Six aeration assemblies are provided for the cone, each with shutoff valves, check valves, flex hose, and air jet. The weigh hopper is supported by three load cell assemblies to brackets at 120° intervals on the bin sidewall. A safety rod at each location provides backup should the load cell assembly fail. The suspended bin is restrained laterally by four anti-sway rods.

The hopper bottom outlet is 14 inches in diameter and has a solenoid valve-actuated, air-operated butterfly valve, HCV-1273, with a position switch. Below this, a 14 in. to 16 in. dia. flex connector connects with a 16 in dia. Y chute. Each Y pant leg has a clamped 16 in. dia. flex connector joining it with the remaining pant leg components supported by the blenders below. Each pant leg has a 16 in. dia. solenoid-actuated, air-operated

butterfly valve, HCV-2725 and HCV-2726, with dual-position switches. Together, the two valves divert the weigh hopper discharge to one or the other of the blenders. Each of these valves connects with a mitered flanged elbow which changes direction from sloping to vertically downward. Finally, another 16 in. dia. solenoid-actuated, air-operated butterfly valve, HCV-1271 and HCV-1277, with dual-position switches is mounted on each blender inlet flange.

The weigh hopper dust collector is mounted centrally on the top of the weigh hopper, flange-connected, with a 2 ft by 2 ft opening. This passive-type dust collector has 95 ft^2 of filter surface provided by 5-1/2 in. dia., 84-inch-long bags in three banks. A two-timer board actuates a three-valve solenoid pilot to control the bag cleaning cycles, using approximately 5 cfm air supply for backflow pulsations.

The two premix air blender/conveyors are pressure vessels, 6 feet in diameter and 11-1/2 feet from top to bottom flanges, with 1,660-gallon capacities. The vessels are built to ASME Sec VIII with a design pressure of 125 psig at 650°F. The dished head has a 0.428-inch minimum thickness with a 57.6-inch radius. The side shell is 3/8 inch thick, and the bottom cone is 1/2 inch thick. Construction material is carbon steel.

The three premix air blender air compressors are Atlas Copco Model GAU 1407 air-cooled, oil-lubricated units rated 960 scfm at 100 psig. Each is driven by a 200 hp General Electric Frame 445TSD electric motor through a flexible coupling. The aftercooler for each compressor is a HiRoss Model A2404T000 air-cooled unit, rated 1,000 cfm at 100 psig. The cooling fan motor is 1-1/2 hp. A HiRoss moisture separator is mounted in the line after each aftercooler.

An Airtek Model CT 1000 cycling refrigerated air dryer has been provided to remove moisture from the air prior to entering the surge tank. This package unit consists of a pre-cooler/reheater, a flooded shell evaporator, a separator, a suction accumulator, a refrigerant compressor, a condenser, and a liquid receiver.

The air surge tank is a 54 in. dia. by 14 ft high vertical cylindrical vessel with a 200 ft^3 volume. The shell is 3/8 inch thick and the dished heads are 0.338 inch thick, minimum; construction is carbon steel. The surge tank is a stamped ASME Section VIII vessel, designed for 120 psig at 650°F.

The two premix air blender dust collectors are passive-type, each with 265 ft^3 of filter surface. Each housing has two manifolds of five banks. A four-timer board actuates a 10-valve solenoid pilot to control the bag cleaning cycles, using approximately 7 cfm air supply for backflow pulsations.

The blenders discharge into a pipeline system which carries the premix to the premix feed bin. The system consists of approximately 425 feet of 6 in. dia. pipe.

2.4.4 Premix Feeder System

The premix feed bin is 12 feet in diameter and 24 feet overall in height, including the 14 ft 6 in. discharge cone height, for 50 tons premix capacity. Material of construction is 1/4 in. carbon steel. The bin roof is a Brighton Corp., 216 in. radius torospherical dished head. The bin is designed for mass flow discharge with a 20° from vertical discharge cone. The bin is provided with a guided level radar measuring system and a vibrating-type high-level switch.

The lowest 5 feet 8 inches of the discharge cone has an interior 16-gage stainless steel liner. Within this area, three levels of Monitor Single Evasser Flo-Pads are mounted – six in the top level, three in the middle, and three

near the bottom – which aerate the discharging material within the cone. Each set of three Flo-Pads are supplied with plant air from an exterior manifold through a solenoid-operated valve.

The 14 in. dia. discharge opening has an open-close, solenoid-controlled, pneumatic slide gate valve for maintenance use.

The premix feed bin dust collector is a passive-type dust collector having 509 ft^2 of filter surface provided by 5-1/2 in. dia., 84 in. long bags in three banks. A two-timer board actuates a three-valve solenoid pilot to control the bag cleaning cycles, using approximately 5 cfm air supply for backflow pulsations.

The Schenck Simplex Model PSS-200 weigh hopper height is 10 feet, and the capacity is 8 tons of premix. Three Schenck Model RT load cells are mounted at 120° intervals around the periphery of the weigh hopper and are rated at 15,000-pound capacity each. Overload protection is by mechanical stops. The weigh hopper is provided with a rotating paddle-type high-level switch.

Close-connected with the 56 in. by 56 in. hopper outlet is a discharge housing containing two parallel screw feeders. Each screw feeder is equipped with a 12 in. dia. screw with a 6 in. pitch and is 138 inches long from feed point to discharge point. Each unit is driven by a 10 hp, 1,750 rpm, variable-speed electric motor through a speed reducer with a 29.3:1 reduction ratio. The variable speed range is 10:1. Dual agitator units with nine rotating blades per unit are mounted in the hopper above the screw feeders to maintain a free flow of premix solids into the feeders. Each agitator is driven by a 5 hp gear motor with 6.5 rpm output.

2.4.5 Clean Cap Batch Tank

The CCBT is a 25 ft dia. by 14 ft high carbon steel tank with a nominal capacity of 45,000 gallons. The tank complies with API 650 and has a design pressure of -3 in. WC and a design temperature of 122°F. The tank shell and roof are 3/8 inch thick and the tank bottom is 1/2 inch thick. The tank has four baffles. The tank is insulated with 1 inch of polyisocyanurate (DuPont Code 118.1 Std. SN100M) and covered with a 0.040-inch-thick interlocked plastic jacket. The tank is equipped with level, density, and temperature instrumentation. Three spare nozzles are provided for future ultrasonic testing. A standard SRS cold sampler is provided for obtaining liquid samples.

The CCBT feed pump is a vertical centrifugal pump rated at 125 gpm, 52 ft total dynamic head (TDH) with a 7.5 hp, 1,200 rpm motor. The pump is constructed of 316 stainless steel. The pump has a water line for priming the pump. The feed line to the mixer is 3 in. sch 160 carbon steel pipe (ASTM A53 seamless grade B or ASTMA 106 seamless grade B). The outdoor portion of the feed line is electrically heat traced.

The CCBT agitator has a turbine impeller and operates at 100 rpm with a 20 hp motor. The sump pump is a submersible pump rated at 26 gpm with a 1/2 hp motor.

The caustic to make inhibited water is supplied by a centrifugal pump from the 310 gallon heated polyethylene caustic storage tank that is 2 ft 11 inch in diameter by 6 ft 10 inch high. This centrifugal pump is rated at 22 gpm for 40 feet of total developed head with ½ hp, 1800 rpm motor. Total transfer volume is determined either by the reverse float local level indication at the tank or an in-line local flow indication with totalizer. Drum pump for transferring caustic from drums to the storage tank is supplied by operations.

2.4.6 Admixture Feed Tank

DELETED

2.4.7 Saltstone Mixer

The Saltstone mixer is a continuous 10 inch twin shafts mixer, constructed of 316 stainless steel with ½ inch thick shell for shielding purpose. It operates at 238 rpm powered by a constant speed 75 hp 1800 rpm motor. The mixer is designed to handle 50 TPH dry feed and mix with liquid with nominal output of 150 gpm of grout and maximum 180 gpm grout. The mixer consists two major components, (1) the mixing chamber (Barrel and Transmission) and (2) the drive unit (Motor, Drive, Reducer). This configuration allows total weight of each component below 10,000 lbs maximum lift capacity of overhead crane in the 210-Z process room. The mixer barrels are made of two horizontally split sections precisely machined to accommodate the two co-rotating intermeshing shafts. The twin shafts are mounted lengthwise in the mixing chamber. Each shaft is fitted with auger and helical paddles in dry feed section for forward conveying, followed by mixing paddles for mixing action and reverse screw auger in the discharge section to prevent material build-up in the end section. The augers are constructed of 316 stainless steel hard-tipped with Stellite #12. The paddles are constructed of Astralloy V. The 1/8 inch clearance between the mixing parts and mixing chamber provides a self-wiping action during operation to prevent build-up of material in chamber. The dry feed enters through a 16 inch circular opening via premix chute on the top and mixed grout leaves the mixer through a 10 inch circular discharge outlet to grout hopper vessel. The liquid enters through top center opening close to dry feed entry over the fifth set of mixing paddles. Each mixing shaft is equipped with mechanical seals on both wet and dry ends. The dry end seal is cooled with dry instrument air and wet end seals are cooled with process water. The mixer has 40 gallons internal cavity volume. The mixer is designed so that all parts in contact with the Saltstone grout can be flushed with water.

The premix chute is a 16 inch circular pipe connecting transition hopper of Premix Blending system at process room roof level to Saltstone mixer inlet for gravity flow path of dry premix solids. Two sight glass windows are mounted on the circular chute for visual camera inspection of dry feed level in the chute. The chute is also equipped with level instrumentations, two conductivity type level devices that monitors and provides warning alarm to DCS indicating liquid presence in the chute, and two tuning-fork type level devices, one at 2 ft (high level) above the mixer inlet and second one at 7 ft (high-high level), monitoring dry material build-up in the chute and provides the warning alarms to DCS.

2.4.8 Saltstone Grout Hopper and Saltstone Hopper Overflow Container (SHOC)

The grout hopper is a cylindrical vessel with cone bottom discharge, located in the process room under the Saltstone mixer. It receives the grout from the mixer and feeds to the grout pump. Its purpose is to provide surge capacity for the grout pump and dampen oscillation in the process flow to the grout pump. This ensures that the grout pump suction stays flooded preventing pumping a grout-air mixture that could disturb the process instrumentation. The hopper has a working volume of 300 gallons with overflow at 410 gallons and piped to SHOC. The hopper is equipped with a variable speed agitator. The agitator has two sets of impellers, and is provided to disperse solids in the event a process upset deposits a moderate amount of dry feeds into the grout hopper from the mixer. It also prevents the grout from setting while it resides in the hopper. The grout hopper has continuous level instrumentation and provides grout level indication to DCS, and an independent high level alarm. Spray nozzles are provided inside the grout hopper for flushing purposes. IW or PW is also used for flushing the grout hopper and Saltstone mixer discharge. The grout is discharged through two 3-way valves into grout pump inlet. This allows the line flushes to hopper, to SHOC and through grout pump.

The SHOC provides radioactive material containment in the event of an upset condition in the grout production process. It is approximately 700 gallons capacity, located in the process room under the grout hopper. The hopper overflow line, hopper drain via 3-way valve, grout transfer line rupture pin release and grout pump head vents are piped to SHOC for radioactive material containment, The SHOC is vented by the PVV system. The SHOC has a bubbler level indicator to alert the operator to potential upset conditions. The SHOC overflows into the process room trench and diverted to the Salt Feed Tank for containment.

2.4.9 Saltstone Grout Pump

The grout pump is a duplex (dual-head) peristaltic (positive displacement) pump rated for up to 180 gallons per minute grout transfer from the hopper to the SDU. Both pump head vents are piped to the SHOC which provides radioactive material containment in the event of pump failure. The pump is equipped with a variable frequency drive. The pump casing is constructed of cast iron. Pump sizing is based on a bingham plastic fluid with a viscosity of 42 centipoise and a specific gravity of 1.8. A three way valve is provided upstream of the grout pump which allows for either flush water or grout to be pumped through the grout transfer piping.

There are two diverter valves HCV-1134 and HCV-1136 in the grout transfer piping. The diverter valves are four-way full-port rotor valves with a double-acting cylinder actuator. The valve fails in the last position (fail-as-is). The valves direct grout pump discharge either to SDU 3 (grout production and grout line flushing) or the SFT (Residual Drain step of Shutdown and for Pig Launches).

2.4.10 Saltstone Rupture Pin

The Rupture Pin valve consists of a piston or plunger on seat, restrained from movement by a slender round pin, the buckling (rupture) pin. The piston (plunger) and seat have a bubble tight seal while under pressure. The pin will buckle at set point (290 psi) from an axial force applied by the system pressure acting on the piston. The Rupture Pin® valves are self-contained and self-actuating. When the pin is buckled, the valve action is full open rapidly. The pin is external to the system being protected and is tightly held in place by both pin ends. When activated, the Rupture Pin will divert grout from the transfer line to an overflow container. This action will protect the grout transfer line from over pressurization and prevent release of material to the environment.

2.4.11 Pig Launchers

The pig launcher is constructed of 4 in. dia. pipe and is about 10 feet high. The pig is loaded at the top and is launched out of the bottom. A 4-inch full-port ball valve isolates the loading section from the launching section.

The launcher is designed to hold up to three pigs. Three launch pins in the loading section separate the pigs from one another. A launch pin retracts to release one pig at a time for launching. However, this capability to load more than one pig into a launcher is currently not being used. Only one pig is loaded and all three pins are maintained in the retracted position.

The pig launcher complies with ANSI B31.3. Design pressure is 360 psig and design temperature is 130°F. Material of construction is carbon steel. The original design allowed for a local logic PLC supplied with the pig launcher to control the pig launching sequence and interface with the CCR. This capability has since been transferred to the SPCS and the PLCs have been removed, although pig valve actuation is still possible from the field.

The pig launching air accumulator is a stamped ASME Section VIII pressure vessel with a capacity of 60 ft^3. The tank is 38 inches in diameter and 96 inches tangent to tangent with 2:1 elliptical heads. Wall thickness is

3/4 inch. The tank has a design pressure of 360 psi and a design temperature of 200°F. Material of construction is carbon steel. A backup air supply is provided.

2.4.12 Portable Water Tank and Pump

Not installed.

2.4.13 Salt Solution Feed Tanks

Presently there are three salt solution feed tanks that can provide feed to the grout mixer; SFT, SSRT #1 and SSRT #2.

2.4.13.1 Salt Feed Tank

The SFT, Z-201000-SFT-TK-0001, is a 12 ft. dia. by 8 ft. 6 in. high carbon steel tank with a nominal capacity of 6,500 gallons. The tank complies with API 650 and has a design pressure of -3 in. WC and a design temperature of 122°F. Its wall thickness is 3/8 inch. The tank is equipped with level and density instrumentation. The tank has baffles [PI6] and is equipped with a standard SRS cold sampler.

The salt feed tank pump is a horizontal centrifugal pump. Rated flow is 125 gpm. The feed line to the mixer is 3 in. sch 160 carbon steel pipe (ASTM A53 or A106 S grade B). Outdoor portions of the feed line are heat traced for freeze protection.

The SFT Cell sump pump is a submersible pump rated at 26 gpm with a 1/2 hp motor.

2.4.13.2 Salt Solution Receipt Tanks

The SSRTs, Z-201001-SSRT-TK-0001 and 0002, are 26 ft. dia. by 19 ft. 6 in. carbon steel tanks with a nominal capacity of 60,000 gallons. The tank complies with API 650 and has a design pressure of -6 in. WC and a design temperature of 200°F. Its wall thickness is 3/8 inch on the bottom 116” of the tank wall and above that the thickness is 5/16 inch. The bottom design thickness is ½ inch min. with a slope of 3/8 in/ft. The tank is equipped with level and density instrumentation. The tank has baffles and a 15 hp agitator controlled by a variable frequency drive (VFD). The agitator has two impellers one 78” diameter and one 88” diameter.

The SSRT salt feed tank pump is a horizontal centrifugal pump. Rated flow is 125 gpm. The feed line to the mixer is 3 in. sch 80 carbon steel pipe (ASTM A53 or A106 S grade B). Outdoor portions of the feed line are heat traced for freeze protection.

The SSRT sump pumps are submersible pumps rated at 77 gpm with a 5 hp motor. There are two, one in each tank cell. The pump gallery drains into the sump in cell #1.

2.4.14 Transfer Line Depressurization System

Abandoned in place pending removal

2.4.15 Deleted

2.4.16 Saltstone Process Vent Systems

2.4.16.1 Saltstone Processing Facility (SPF) PVV System

The process vent system consists of a mist eliminator, heater, HEPA filters, and blowers. The mist eliminator is a 16 in. dia., 5 ft high vessel with a removable 8 in. thick by 11 in. dia. wire mesh pad (Otto York Style 826).

Design pressure is atmospheric at a design temperature of 131°F. Material of construction is 304L stainless steel.

The heater is a 2.5 kW, 480 V continuously operated electric heater. The HEPA filter housings are constructed of 304L stainless steel and hold a 24 in. by 24 in. by 5-7/8 in. filter. The housing design pressure is 1 psig.

The blowers are rated at 150 cfm 13 in.WG static pressure with a 3 hp, 1,800 rpm motor. The fan wheel is the radial type and rotates at 3,765 rpm. The blowers are constructed of 304L stainless steel. Most of the vent piping is 3 in. sch 40 galvanized carbon steel pipe (ASTM A53 or A106).

2.4.16.2 SSRT PVV System

The process vent system consists of inlet HEPA filters, mist eliminator, heater, outlet HEPA filters, and blowers. The mist eliminator fits into a 8 in. dia., sch. 40 pipe. The wire mesh is 6 inches thick. Design pressure is atmospheric at a design temperature of 90°F. Material of construction is 304 stainless steel.

The heater is a 1.35 kW, 480 V, SCR controlled electric heater. The HEPA filter housings are constructed of 304L stainless steel and hold a 24 in. by 24 in. by 5-7/8 in. filter. The housing design pressure is 1 psig.

The blowers requirements are 250 scfm @ 16 in.WG static pressure with a 3 hp, 3,600 rpm motor with a VFD controller. The fan wheel is the radial type, with a 14” impeller. The blowers structural steel is ASTM A36/ASTM A500 GR. B/C Galvanized. Most of the vent piping is 4 or 6 in. sch 40 galvanized carbon steel pipe (ASTM A106 Grade B).

2.4.17 High Pressure Flush Pump

The HP flush pump is a 15 HP horizontal centrifugal pump rated for 125 GPM at 196 PSI.

2.5 CODES AND STANDARDS

The abbreviations listed below shall mean:

AISC	American Institute of Steel Construction
ANSI	American National Standards Institute
API	American Petroleum Institute
ASME	American Society of Mechanical Engineers
ASTM	American Society for Testing and Materials
AWS	American Welding Society
HI	Hydraulic Institute
NEMA	National Electrical Manufacturers Association
NFPA	National Fire Protection Association
OSHA	Occupational Safety and Health Administration
UBC	Uniform Building Code

The Saltstone process is designed to comply with the requirements of the applicable codes and standards listed below.

AISC	1976	Code of Standard Practice for Steel Buildings and Bridges

ANSI A58.1	1982	Minimum Design Loads for Buildings and Other Structures
ANSI B31.3	1983	Chemical Plant and Petroleum Refinery Piping
API 610	1981	Centrifugal Pumps for General Refinery Services
API 650	1980	Welded Steel Tanks for Oil Storage
ASME Sect. II	1983	Material Specifications
ASME Sect. V	1986	Nondestructive Examination
ASME Sect. VIII	1983	Pressure Vessels
ASME Sect. IX	1984	Welding and Brazing Qualifications
ASTM	—	Book of Standards
AWS D1.1	1983	Structural Welding Code - Steel
HI	1983	Hydraulic Institute Standards
NEMA ICS6	1983	Enclosures for Industrial Controls and Systems
NEMA MG-1		Motors and Generators
NFPA 70	1984	National Electrical Code
OSHA 1910.23, 24, and 27	1974	Ladders, Platforms and Stairs
OSHA1910.219	1982	Mechanical Power Transmission Apparatus
UBC 2312	1985	Earthquake Regulations

For the SSRT Facility Code of Record see U-TC-Z-00001 Rev. 13.

2.6 INSTRUMENTATION AND CONTROL

Instruments associated with the system are shown on the P&IDs and listed in the instrument index. The type, range, accuracy, and label are shown on the instrument data sheets. The instrument location with respect to the process is shown on the P&ID and the physical location is shown on the instrument location drawing. Instruments which have set points are listed in Section 4.1.

2.6.1 Railcar Unloading and Conveying System

Abandoned in place.

2.6.2 Storage Silos

The storage silos are monitored for level by a guided level radar detection system. Each silo has a radar level detector/transmitter – LE/LIT-1226, LE/LIT-1228, LE/LIT-1229, or LE/LIT-1231 – which transmits a level signal to a level indicator located in the unloading office. The indicator indicates silo level, generates high- and low-level alarm points for each silo, and transmits silo level to the SPCS for indication (LI-1226, LI-1228, LI-1229, and LI-1231), and level alarm (LALL/LAL-1226, LALL/LAL-1228, LALL/LAL-1229, and LALL/LAL-1231) in the CCR. In addition to the radar level detection system, each silo has a vibration-type level switch – LSHH-1237, LSHH-1238, LSHH-1239, or LSHH-1240 – which monitors for silo high-high level.

Silo vent dust collectors are monitored for clogging using high differential pressure switches PDSH-1227 and PDSH-1230 across the bag filters. High differential pressure is alarmed at LOS-301, PDAH-1227X, and PDAH-1230X, and in the CCR via the SPCS, PDAH-1227, and PDAH-1230.

For further details, see P&ID W754522 and LLD G-PLC-Z-00008.

2.6.3 Premix Blending and Conveying System

Air slides feed the individual dry materials to the weigh hopper based on signals from the Load cells and CCR. From the weigh hopper, the mixture of cement, slag, and flyash is discharged to either of the twin premix air blender/blow tanks whose contents were previously conveyed to a premix feed bin. The two premix air blender/blow tanks are used alternately for mixing and conveying the premix to the premix feed bin. Each premix blender/blow tank is equipped with a bag dust filter. LOS-302 blender controller is located in the CCR.

The blending system is normally started and stopped from the SPCS (HIS-1275). Manual blending is indicated in the SPCS (XI-1275). Common trouble alarm UA-1275 for all systems is provided in the SPCS.

For further details, see P&IDs W754524 and M-M6-Z-0044.

2.6.4 Premix Feeder System

From the premix feed bin, the premix is discharged to the Saltstone mixer via weigh hopper and screw feeders. The weigh hopper is installed on three load cells for accurate speed control as required for gravimetric weigh feeders. The premix screw feeders have variable-speed drive. This system is controlled from LOS-303 supplied by others and located in the CCR.

LOS-303 operates on the principle of controlled loss-in-weight in the weigh hopper. Output signal from weigh hopper cells is proportional to the weight of material after tarring compensation. The change of premix weight in the hopper depends on the speed of premix filling and discharging. The control algorithm calculates the actual discharge flow rate of dry material and modulates the speed of the two screw feeders equipped with variable-speed drives to make the actual discharge flow rate equal to the flow rate selected by the operator.

The main system start/stop, HIS-1372, and the manual setting of flow rate controller FIC-1372 are duplicated at the SPCS console. LOS-303 is operated in the remote mode with operator input from the SPCS.

Flow rate controller FIC-1372 provides an analog output of 4 to 20 mA from the SPCS, corresponding to a 0 to 100 percent flow rate of premix (0-50 tons/hour), which should allow the SPCS operator to set the desired flow rate. This 4 to 20 mA signal is used by the weigh hopper controller, which, in turn, provides a 4 to 20 mA output to the SPCS to indicate actual flow (FIC-1372). The actual flow is also used to control the salt solution flow. See P&ID M-M6-Z-0073

Local control of premix feed from the weigh hopper controller is indicated by HI-1367 at the LOS-303 control console (CCR). Premix feed bin level indication control LI-1368 and dust collector running status HI-1369 are provided at the SPCS control console (CCR). Premix feed bin shutoff valve is controlled from the SPCS console. CLD W768538 shows interlock from weigh hopper LSH-1381.

For further details, see P&ID W754529.

2.6.5 Salt Solution Feed Tanks

Presently there are three salt solution feed tanks that can provide feed to the grout mixer; SFT, SSRT #1 and SSRT #2. Valves, SSRT-V-0050 and SSRT-V-0051 need to be correctly positioned to select either the SFT or an SSRT.

2.6.5.1 Salt Feed Tank

The operator can open or close inter-area transfer valve HCV-1046 using software switch HIS-1046.

The operator can send a request to the H-Area operator for the salt solution transfer from H-Area by activating software switch HIS-1057. Conductivity element/high-level switch LSH-1056, set several inches below the SFT overflow nozzle, provides a hardwired interlock to close inter-area transfer valve HCV-1046.

SFT level is monitored by a bubbler level detection system, which transmits level and density to the SPCS. Level indication is computed by dividing a level head of the solution by the density of the solution. Software switches that activate high level alarm LAH-1052, low level alarm LAL-1052, and low low level alarm LALL-1052 as well as the LDI-1052 calculator are derived using SFT level LT-1052 signal as an input. Salt solution density indication DI-1053 is also provided.

SFT level high switch LSH-1052 is activated when the SFT level approaches the SFT overflow nozzle and automatically cuts off the start permissive for the H-Area transfer pump and interlock the pump prime water valve closed and interlocks the SDU 6 drainwater return pumps.

SFT level low alarm LSL-1052 is activated when the SFT level falls below the SFT low-level set point [PI7] and will prevent swap over to salt solution (HIS1118A) so as to ensure adequate level is in the SFT prior to switchover to it as a grout feed source. The SFT low low level alarm LALL-1052 is activated when the SFT level falls below the SFT low-low-level set point, activates system setback, and will prevent startup of the SFT pump (HIS5176) as material observed at the top of the SFT liquid surface during camera inspection March 2010 may be responsible for startup priming problems with the SFT pump.

A calculation is also performed of the level change over 15 minutes and is indicated as LDI1052. This calculation integrates the difference between the flow rates into the SFT (salt solution and leachate) and out of the SFT (flow to the mixer) over 15 minutes. An alarm is activated for the operator if this calculated change in level is more than a specified differential versus the measured level change over 15 minutes. These differentials will either activate LDAL-1052 or LDAH-1052. This differential represents a summation of the uncertainties of all instrumentation involved over that 15 minute period.

Salt solution flow is detected and transmitted to the SPCS by a magnetic flow meter, FE-1050/FT-1050, monitoring the discharge line of the salt feed tank pump. Salt solution flow controller FIC-1050 controls salt solution feed volume flow rate to the mixer by modulating salt solution flow control valve FCV-1050.

Software controller FIC-1050 is a reverse-acting PID controller with manual, auto, and cascaded modes and indicates the salt solution feed volume flow rate to the mixer and generates the salt solution flow low alarm FAL-1050. When the system shutdown mode is selected on mode selector switch HIS-1110, flow controller FIC-1050 output is automatically set at 100 percent following a preset time delay (KC-1050), to keep flow control valve FCV-1050 fully open to allow a free drainage of feed line to SFT.

The premix feed mass flow rate (from the weigh hopper controller, LOS-303) is multiplied by a ratio value to produce a control set point for the total liquid mass flow rate of the salt solution. A ratio value is set in the SPCS which displays the ratio value and the premix feed mass flow set point.

The set point for the salt solution mass flow rate is divided by the salt solution density value to produce a set point for the salt solution volume flow rate to be supplied to the salt solution feed flow controller FIC-1050. See Figure 11.

Salt feed tank pump discharge pressure is monitored by diaphragm pressure transmitter PT-1054 and sent to the SPCS. Salt feed tank pump discharge pressure controller PIC-1054 controls the pump discharge pressure by modulating salt feed tank pump discharge pressure control valve PCV-1054. Software controller PIC-1054 is a reverse-acting PID controller with manual and auto modes.

Salt feed tank pump discharge pressure low switch PSL-1054 is a software switch, activated when the salt feed tank pump discharge pressure decreases below an activation point. When pressure low switch PSL-1054 has been activated and salt solution feed has been energized more than a preset time (KC-1054), the salt feed tank pump is automatically stopped. Pressure low switch PSL-1054 also activates pump discharge pressure low alarm PAL-1054. Salt feed tank pump discharge pressure high alarm PAH-1054 is also provided.

SFT solution temperature is monitored by thermocouple TE-1066A mounted in the tank. SFT salt solution temperature indicator TI-1066 is provided in the SPCS.

SFT solution temperature low switch TSL-1066 is a software switch to be activated when the SFT solution temperature falls below the low set point and triggers SFT solution temperature low alarm TAL-1066. SFT temperature high switch TSH-1066 is a software switch, activated when the solution temperature exceeds an acceptable value and triggers the SFT solution temperature high alarm TAH-1066.

The operator may start the salt feed tank pump by actuating two-position control switch HS-5176, which also indicates the position selected, start or stop, and a pump running status. The salt feed tank pump is automatically started when the system prestart mode is selected on mode selector switch HIS-1110. At a preset time after the system shutdown mode is selected on mode selector switch HIS-1110, the salt feed tank pump is automatically stopped.

When the operator actuates control switch HS-5176 to start the pump, or selects the system prestart mode, pump priming valve HCV-1182 opens for a preset time to provide pump priming water. At a preset time after priming valve HCV-1182 has begun to open, the pump is started. An activation of SFT low low level alarm LALL-1052 prohibits a start. The operator can stop the pump at any time by actuating control switch HS-5176 regardless of other interlock conditions.

The operator can open or close salt solution shutoff valve HCV-1055 by actuating two-position control switch HIS-1055 only whe the system manual mode is selected on mode selector faceplate HIS-1110. When the system prestart mode is selected, shutoff valve HCV-1055 is closed to keep the salt solution from entering the mixer while the pump is started and running in the recirculation mode through the pressure control line. When the system start mode is selected, shutoff valve HCV-1055 is opened. When the system shutdown mode is selected, shutoff valve HCV-1055 remains open for a preset time to consume all residual premix in the mixer and then closes. At a preset time after the salt solution feed pump has stopped, shutoff valve HCV-1055 automatically

reopens to allow a free drainage of feed line to SSHT. A feed shutoff interlock signal closes shutoff valve HCV-1055 regardless of the position of mode selector switch HIS-1110.

SFT sump level is monitored by conductivity level element LE-1174 with high-level switch LSH-1174 inputting to the SPCS. The operator may start or stop SFT sump pump Z-201-SFT-P-0002 by actuating two-position control switch HS-1175.

When the sump level decreases, the sump pump is manually stopped. When the sump level increases and activates the level high switch LSH-1174, the sump level high alarm LAH-1174 actuates.

SFT agitator has been placed into long-term isolation per S4-OPS.19.[PI8]

For further details, see P&IDs M-M6-Z-0073 and M-M6-Z-0074.

2.6.5.2 Salt Solution Receipt Tanks

When SSRT-V-0050 and 0051 are aligned to transfer into one of the SSRTs, the operator can open or close an inter-area transfer by opening or closing valve HCV-7502 or HCV-7522 using software switch HIS-7502 or HIS-7522 for SSRT #1 or #2, respectively.

The operator can send a request to the H-Area operator for the salt solution transfer from H-Area by activating software switch HIS-1057. Conductivity element/high-level switch LSHH-7508 & 7528, set several inches below the SSRT overflow nozzle, provides an interlock to remove the inter-area transfer permissive to HIS-1057.

Besides conductivity probes, the SSRT level is monitored by a bubbler level detection system, which transmits level and density to the SPCS. Level indication is computed by dividing a level head of the solution by the density of the solution. Software switches that activate high level alarm LAH-7506 & 7526, low level alarm LAL-7506 & 7526. Salt solution density indication DI-7507 & 7527 is also provided.

SSRT level switch, LS-7506 & 7526 activates when the SSRT level falls to certain levels. These levels control the SSRT agitator to stop and start at various levels to keep the agitator blades from causing splashing or aerosolization and alerting the operator when the tank is approaching a high high level or low low.

Salt solution flow is detected and transmitted to the SPCS by a magnetic flow meter, FE-1050/FT-1050, monitoring the discharge line of the salt feed tank pump. Salt solution flow controller FIC-1050 controls salt solution feed volume flow rate to the mixer by modulating salt solution flow control valve FCV-1050.

Software controller FIC-1050 is a reverse-acting PID controller with manual, auto, and cascaded modes and indicates the salt solution feed volume flow rate to the mixer and generates the salt solution flow low alarm FAL-1050. When the system shutdown mode is selected on mode selector switch HIS-1110, flow controller FIC-1050 output is automatically set at 100 percent following a preset time delay (KC-1050), to keep flow control valve FCV-1050 fully open to allow a free drainage of feed line to SFT.

The premix feed mass flow rate (from the weigh hopper controller, LOS-303) is multiplied by a ratio value to produce a control set point for the total liquid mass flow rate of the salt solution. A ratio value is set in the SPCS which displays the ratio value and the premix feed mass flow set point.

The set point for the salt solution mass flow rate is divided by the salt solution density value to produce a set point for the salt solution volume flow rate to be supplied to the salt solution feed flow controller FIC-1050. See Figure 11.

SSRT pump discharge pressure is monitored by diaphragm pressure transmitters PIT-7510 & 7530 and sent to the SPCS.

SSRT pump discharge pressure low switch PSL-7510 & 7530 is a software switch, activated when the salt feed tank pump discharge pressure decreases below an activation point. Pressure low switch PSL-7510 & 7530 also activates pump discharge pressure low alarm PAL-7510 & 7530. Salt feed tank pump discharge pressure high alarm PAH-7510 & 7530 is also provided.

SSRT solution temperature is monitored by thermocouple TE-7503A & 7523A mounted in the tanks. SSRT salt solution temperature indicator TI-7503 &7523 is provided in the SPCS.

SSRT solution temperature low switch TSL-7502 &7523 is a software switch to be activated when the SSRT solution temperature falls below the low set point and triggers SSRT solution temperature low alarm TAL-7503 &7523. SSRT temperature high switch TSH-7503 &7523 is a software switch, activated when the solution temperature exceeds an acceptable value and triggers the SSRT solution temperature high alarm TAH-7503&7523 to alert the operator to turn off the agitator, before the SAC value is reached and the interlock is tripped. TAHH-7503 & 7523 will interlock off the agitator. This interlock protects the initial SSRT temperature of 40.00°C assumed in SCLC-Z-00098.

The operator may start the SSRT pumps by actuating two-position control switch HIS-7518 &7538, which also indicates the position selected, start or stop, and a pump running status. The SSRT pumps are automatically started when the system prestart mode is selected on mode selector switch HIS-1110. At a preset time after the system shutdown mode is selected on mode selector switch HIS-1110, the SSRT pumps are automatically stopped.

The operator can open or close salt solution shutoff valve HCV-1055 by actuating two-position control switch HIS-1055 only when the system manual mode is selected on mode selector faceplate HIS-1110. When the system prestart mode is selected, shutoff valve HCV-1055 is closed to keep the salt solution from entering the mixer while the pump is started and running in the recirculation mode through the pressure control line. When the system start mode is selected, shutoff valve HCV-1055 is opened. When the system shutdown mode is selected, shutoff valve HCV-1055 remains open for a preset time to consume all residual premix in the mixer and then closes. At a preset time after the salt solution feed pump has stopped, shutoff valve HCV-1055 automatically reopens to allow a free drainage of feed line to SSHT. A feed shutoff interlock signal closes shutoff valve HCV-1055 regardless of the position of mode selector switch HIS-1110.

SSRT sump level is monitored by conductivity level element LE-7501A & B and 7521A & B with inputs to the SPCS. The operator may start or stop SSRT sump pumps Z-201-SSRT-P-0003 & 0004 by actuating switches HS-7500 or HIS-7500 & HS-7520 or HIS-7520. In remote operations the LSH starts the sump pump and the LSL shuts off the pump.

When the sump level decreases, the sump pump automatically stops. When the sump level increases and activates the level high switch LSH-7500 & 7520, the sump level high alarm LAH-7500 & 7520 actuates.

The SSRT agitators are controlled by software switch HIS-7517 & 7537 which allows the operator to start or stop the agitator. The SSRT agitator is interlocked stopped by SSRT low level switch LSL-7506 & 7526.

In the SSRT Pump Room there is a “Sample Station” (SSRT-SNK-0001)at which 1 liter samples can be taken from either SSRT Transfer pump. There is not a plan, procedure or requirement for the sample station at this time. It was installed in case there comes a time when a sample is required.

For further details, see P&IDs M-M6-Z-00109 and P-PM-Z-00025.

2.6.6 Admixture Feed Tank

DELETED

2.6.7 Saltstone Mixer

Dry, premixed feed material and salt solution are fed to the Saltstone mixer. The mixer is monitored and controlled from DCS using mixer graphic. The Saltstone mixer speed transmitter SIT-1107 is a speed monitor for the constant mixer and displays the actual speed of the mixer. If the mixer speed is slowing down, it will generate a low speed alarm (SAL-1107) when the speed drops below 200 rpm and low-low speed alarm when speed drops below 100 rpm indicating potential of grout thickening in the mixer. The mixer power is also monitored and generates an alarm if the power consumption increases above 50 hp indicating mixer failure. The alarms notify operator of abnormal conditions that may require corrective actions. The mixer is equipped with mechanical seals on both dry and wet ends of each shaft. The dry end seals are cooled with air and wet end seals with cooling water.

The operator can start or stop the Saltstone mixer using two-position software control switch HIS-1107 when the system is in the manual mode (HIS-1110). Control switch HIS-1107 provides an output to start or stop the mixer and has a display of the selected switch position, the mixer running indication, and the mixer in local control indication. At a preset time after the system start mode has been selected on the mode selector faceplate, the Saltstone mixer is automatically started. When the system shutdown mode is selected on mode selector switch, the Saltstone mixer is automatically stopped after the mixer auto flush sequence is completed.

The mixer discharges grout into the grout hopper located underneath the discharge outlet. The discharge chute is equipped with two flush nozzles controlled by HCV-7005 valve. If the level in the grout hopper increases to a high level, process goes into setback isolating dry feeds and then liquid after a smartflush.

For further details, see P&ID M-M6-Z-0073.

2.6.8 Grout Hopper

Hopper level is monitored by a radar measurement system, which transmits signal LT-8003 to the SPCS. A high value from this input is used as a process variable input for software level controller LI-8003. The hopper level controller is direct-acting proportional integral derivative (PID) controller with manual and auto modes. Output from the level controller provides hopper level indication LI-8003 and set point signal for the Saltstone transfer pump speed controller SIC-9001.

Hopper high-level alarms LAH-8003 is triggered by software switch LSH-8003. The hopper level indication (LI-8003) is derived from level transmitter LT-8003.When the hopper level increases to the high set point, System Setback is achieved and mixer feeds are stopped.

Spray nozzles are provided for flushing. The hopper spray nozzle valves (HCV-7006, HCV-7013 and HCV-7012) are intended to provide flushing capability to all wetted areas in the hopper. The operator can open spray nozzle valves using the two-position control switches when in manual mode. When in auto mode, spray nozzle valves open periodically to spray the interior surface of the hopper and are actuated during system shutdown as part of the system flush procedures.

The flow of inhibited water (IW) or process water (PW) to the mixer and other process flushes is monitored by line-mounted magnetic flow meter FE/FT-1118, which transmits to the SPCS. Process water total flow indicator FQI-1118 is a software flow integrator with a reset function to monitor the quantity of process water used during the mixer flush operation and the grout hopper flush operation. When the quantity of process water reaches a high set point, the total process water high alarm (FQAH-1118) is actuated. The process water flow rate indication (FI-1118) is also provided. Process water to other flushes in the process room is provided by FI/FQI-5174. The total flow of process water into the mixer is measured by FQI-1118A which subtracts FI-5174 from FI1118.

For further details, see P&IDs M-M6-Z-0075.

2.6.9 Grout Transfer Pump

The Saltstone grout transfer pump is a double-acting peristaltic pump. The discharge pressure is monitored by discharge pressure transmitter PT-1129, which transmits to the SPCS. The discharge pressure indication is derived from the input signal along with the discharge pressure software switches.

For each grout transfer pump head, a lubricant level low alarm, LAL-8009A and LAL-8009B are provided. These alarms are triggered by hardware switches mounted on the fluid reservoirs.

Running speed of the grout transfer pump is modulated by speed controller SIC-9001, the speed set point is cascaded from the hopper level controller LI-8003 in the normal grout transfer operation.

Saltstone grout flow in the transfer line is detected and transmitted to SPCS by magnetic flow meter FT-1127 and indicated by FI-1127 on common display frame. Low-flow software switch FSL-1127 triggers alarm FAL-1127 to warn the operator of low flow in the grout transfer line.

Saltstone transfer line pressure is monitored by pressure transmitter PT-1129 which transmits to the SPCS. Pressure indication is provided on a common display frame with Saltstone transfer line pressure high and high-high alarms PAH-1129 and PAHH-1129.

Saltstone grout density is monitored by line-mounted density transmitter DIT-1144 which transmits to the SPCS. Density indication DI-1144 is provided along with density high alarm DAH-1144 and low alarm DAL-1144.

For further details, see P&ID M-M6-Z-0075.

2.6.10 Grout Transfer Line Rupture Pin

The Saltstone grout transfer line rupture pin is an over pressurization device designed to protect the grout transfer line from damage and/or failure. The rupture pin will buckle at set point (290 psi) from an axial force

applied by the system pressure acting on the piston. The Rupture Pin valves are self-contained and self-actuating. The rupture pin activation would be seen in the control room as “Rupture Pin Alarm (LAH-8015)”.

2.6.11 Pig Launchers

Pig launching stations No. 1 and No. 2 clean the Saltstone transfer line up to the Saltstone disposal SDU. Each pig launching station (No. 1 or No. 2) is furnished with a Field Control Station, TBC-1009 and TBC-1011, which is located in the Process Room.

The operator can position pig No. 1 entry valve HCV-1136 without initiating a pig launching sequence using two-position software control switch HIS-1136 for normal and launch position. When a pig No. 1 launch is selected, pig No. 1 entry valve HCV-1136 is automatically aligned in the launch position. Pig No. 1 entry valve HCV-1136 normal or launch position indication (ZI-1136A or ZI-1136B) is provided on a common display frame with the control switch, HIS-1136.

The SPCS operator can remotely initiate a pig No. 1 launch sequence by actuating two-position software control switch HIS-1137A. Pig No. 1 launch signal can be sent to pig No. 1 by an operator from the SPCS. When pig No. 1 launch signal exists, air accumulator No. 1 supply valve HCV-1146 is automatically closed and air accumulator No. 1 discharge valve HCV-1149 is automatically opened.

Once the pig No. 1 launch has been initiated, the launch sequence is monitored by an operator observing both visual confirmation of pig receipt in the SDU as well as pressure drop in the piping. When the pig launch is confirmed to be complete, the pig launch logic is reset for another operation.

Air accumulator No. 1 pressure is monitored by tank-mounted pressure transmitter PT-1148, which transmits to the SPCS. The air accumulator No. 1 pressure indication PI-1148 is derived from the signal and displayed on a common display frame. Pressure low-low and low alarms PALL-1148 and PAL-1148 are triggered by pressure low-low and low software switches PSLL-1148 and PSL-1148.

The operator may control air accumulator No. 1 air supply valve HCV-1146 using two-position software control switch HIS-1146 to open or close the valve. When the pig No. 1 launch request signal exists or air accumulator No. 1 pressure high software switch PSH-1148 is activated, air accumulator No. 1 air supply valve HCV-1146 is automatically closed. When air accumulator No. 1 pressure high software switch PSH-1148 has been deactivated more than a preset period (KC-1148) and air accumulator No. 2 air supply valve HCV-1155 is fully closed, air accumulator No. 1 air supply valve HCV-1146 is automatically opened.

A valve close demand has priority over a valve open demand in the control logic for air accumulator No. 1 air supply valve HCV-1146. Air accumulator No. 1 air supply valve HCV-1146 fully closed position indication ZI-1146 is provided on a common display frame with control switch HIS-1146. When one or both of the air accumulator air supply valves, HCV-1146 and HCV-1155, are open, an air compressor start demand signal is generated.

The operator may control air accumulator No. 1 air discharge valve HCV-1149 using two-position software control switch HIS-1149 to open or close the valve. Air accumulator No. 1 air discharge valve HCV-1149 is automatically opened when the pig No. 1 launch request signal exists. Air accumulator No. 1 air discharge valve HCV-1149 fully closed position indication ZI-1149 is provided on a common display frame with control switch HIS-1149.

The operator can position pig No. 2 entry valve HCV-1134 without initiating a pig launching sequence by using two-position software control switch HIS-1134. When a pig No. 2 launch is selected, pig No. 2 entry valve HCV-1134 is automatically aligned in the launch position. Pig No. 2 entry valve HCV-1134 normal or launch position indication (ZI-1134A or ZI-1134B) is provided on the same display frame with the control switch HIS-1134.

The operator can initiate a pig No. 2 launching sequence using two-position software control switch HIS-1144 for normal or launch operation. When the pig No. 2 launch request signal exists, air accumulator No. 2 supply valve HCV-1155 is automatically closed and air accumulator No. 2 discharge valve HCV-1158 is automatically opened.

Air accumulator No. 2 pressure is monitored by tank-mounted pressure transmitter PT-1157 which transmits to the SPCS. The air accumulator No. 2 pressure indication (PI-1148) is derived from the signal and displayed on a common display frame. Pressure low-low and low alarms PALL-1157 and PAL-1157 are triggered by pressure low-low and low software switches PSLL-1157 and PSL-1157.

The operator may control the air accumulator No. 2 air supply valve, HCV-1155, using two-position software control switch HIS-1155 with a momentary output to open or close the valve. When a pig No. 2 launch request signal exists or air accumulator No. 2 pressure high software switch PSH-1157 is activated, air accumulator No. 1 air supply valve HCV-1155 is automatically closed. Priority is given to refilling pig launch accumulator No. 2 because it is the backup for the instrument air supply. When air accumulator No. 2 pressure high software switch PSH-1157 has been deactivated more than a preset period (KC-1157), air accumulator No. 2 air supply valve HCV-1155 is automatically opened. A valve close demand has priority over a valve open demand in the control logic for air accumulator No. 2 air supply valve HCV-1155. Air accumulator No. 2 air supply valve HCV-1155 fully closed position indication ZI-1155 is provided on a common display frame with control switch HIS-1155.

The operator may control air accumulator No. 2 air discharge valve HCV-1158 using the two-position control switch (HIS-1158) to open or close the valve. Air accumulator No. 2 air discharge valve HCV-1158 is automatically opened when the pig No. 2 launch request signal exists. Air accumulator No. 2 air discharge valve HCV-1158 fully closed position indication ZI-1158 is provided on a common display frame with the control switch (HIS-1158).

The operator can open or close No. 1 flush line isolation valve HCV-1139 using two-position control switch HIS-1139. No. 1 flush line isolation valve HCV-1139 is automatically opened during the system auto shutdown mode. No. 1 flush line isolation valve HCV-1139 fully closed position isolation ZI-1139 is provided on a common display frame with the control switch HIS-1139. The operator can open or close No. 2 flush line isolation valve HCV-1794 using two-position software control switch HIS-1794. No. 2 flush line isolation valve HCV-1794 fully closed position indication ZI-1794 is displayed on a common display frame with the control switch HIS-1794.

For further details, see P&IDs W775547 and W775558 and LLDs G-PLC-Z-00005 and G-PLC-Z-00006.

2.6.12 Saltstone Process Vent Systems

2.6.12.1 SPF PVV System

Process vent mist eliminator treats SFT and CCBT vent gases. Process vent mist eliminator differential pressure is monitored by differential pressure transmitter PDT-1068 which transmits to the SPCS. Differential pressure indication PDI-1068 and differential pressure high alarm PDAH-1068 are displayed on common display frame.

The operator can open and close process mist eliminator process water valve HCV-1058 using software control switch HIS-1058. Valve fully closed position indication ZI-1058 is displayed on a common display frame with the control switch HIS-1058.

Process vent heater inlet gas temperature indication TI-1086 and process vent HEPA filters outlet gas temperature indication TI-1089 are provided at the SPCS console. Process vent heater power is controlled by high temperature hardware switch TSH-1100 supplied with the heater. Local hand switch HS-1100 is available for local control of the heater.

Process vent HEPA filter differential pressure high alert PDOH-1088B and process vent HEPA filter differential pressure low alarm PDAL-1088B are provided on a common display frame at the SPCS. The local vent HEPA filter differential pressure indication, high alert, and low alarm are provided on a local operating station (LOS-123).

Process vent gas flow rate is monitored by line-mounted thermal flow meter FE/FT-1087, which transmits to the SPCS. Gas flow rate indication FI-1087 is derived from the signal along with process vent flow high alarm FAH-1087 and process vent flow low alarm FAL-1087, which indicates an activation of process vent flow low software switch FSL-1087.

Process vent blowers No. 1 and No. 2 are controlled independently of the mixer system operating mode. Normally, one blower is in operation and the other is set in standby to automatically start when the operating blower has failed. Process vent blower inlet valves HCV-1090 and HCV-1094 are automatically opened or closed as their respective blowers are started or stopped.

Control logic is typical for both blowers No. 1 and No. 2. The operator can control the blower (No. 1 or No. 2) using three-position software control switch HIS-1092 or HIS-1093. The operator can stop the blower (No. 1 or No. 2) at any time using a control switch HIS-1092 or HIS-1093. When the blower (No. 1 or No. 2) is not running, blower inlet valve HCV-1090 or HCV-1094 is automatically closed. The operator can start the blower (No. 1 or No 2) using control switch HIS-1092 or HIS-1093. At a preset time (KC-1080A or KC-1094A) after the blower (No. 1 or No. 2) is started, the inlet valve to the other blower, HCV-1090 or HCV-1094, is automatically closed and the other blower (No. 2 or No. 1) is automatically stopped if it has been running.

When flow low software switch FSL-1087 has been activated more than a preset time (KC-1087) while the blower (No. 1 or No. 2) is running, the other blower (No. 1 or No. 2) is automatically started if it is in standby position. When no blower is set in the standby position or the standby blower is started, no blower in standby alarm HSA-1092 is activated. Blower running indication and blower in local control indication are displayed on a common display frame with each respective control switch, (HIS-1092 or HIS-1093. The blower inlet valves fully open or fully closed position indications ZI-1090A or B and ZI-1094A or B are also provided.

For further details, see P&IDs M-M6-Z-0078, W775555 and W775553.

2.6.12.2 SSRT PVV System

The SSRT PVV mist eliminator treats SSRT #1 & #2 vent gases. Process vent mist eliminator differential pressure is monitored by differential pressure transmitters PDIT-0001 & 0002 which transmits to the SPCS. Differential pressure indication PDI-0001 & 0002 and differential pressure high alarm PDAH-0001 & 0002 are displayed on SPCS.

Process vent heater inlet gas temperature element TE-1102A and process vent HEPA filters outlet gas temperature element TE-1102B provide input to the Differential Temperature Indicating Controller, TDIC-1102. The controller is programmed to maintain a differential temperature of ten (10) degrees F between the input temperature and the outlet temperature. Process vent heater power is also controlled by a high temperature control switch TIC-1107 supplied with the heater. Local hand switch HS-1102 is available for local control of the heater.

The SSRT PVV Inlet HEPA filter is composed of an initial roughing filter and the inlet HEPA filter. Both of these filters have differential pressure high alerts PDAH-0016A & 0016B and 0019A & 0019B displayed on the SPCS.

The SSRT PVV Exhaust HEPA filter is composed of two parallel paths. Both paths are identical. Only one is required for operations. The other path is available for maintenance and filter change out. Differential pressure high alert PDAH-1100 & 1101 and process vent HEPA filter differential pressure low alarm PDAL-1100 & 1101 are provided on a common display frame at the SPCS. There is local vent HEPA filter differential pressure indication, high alert, and low alarm are provided on a local operating station (PVV-UA-1105).

Process vent gas flow rate is monitored by three (3) line-mounted flow meters, FE/FIT-1103, 1104 and 1105 which transmit to the SPCS. FE/FIT-1103 monitors the flow from SSRT #1, FE/FIT-1104 monitors the flow from SSRT #2 and FE/FIT-1105 measures the combined flows at the blower inlet. The three (3) flow transmitters provide a signal to the SPCS to activate three (3) low flow alarms for the operators, FAL-1103, 1104 & 1105.

Process vent blowers No. 1 and No. 2, BLO-1200 & 1201, are controlled independently with VFDs. Normally, one blower is in operation and the other is available when the operating blower has failed or needs maintenance. The control of the blowers is local only, via manual dampers and manual control of the VFD. There is no control of the PVV blowers via the SPCS.

For further details, see P&IDs M-M6-Z-00132.

2.6.13 Clean Cap Batch Tank

CCBT level is monitored by a bubbler level detection system, which transmits level LT-1062 and density DT-1063 to the SPCS. Level indication LI-1062 is computed by dividing a level head of the solution by the density of the solution. Two (2) software level switches LSL-1062 and LSH-1062 are derived using CCBT level LT-1062 signed as an input. Salt solution density indication DI-1063 is also provided.

CCBT level low switch LSL-1062 when activated shuts down the CCBT agitator. CCBT level high switch when activated provides a tank high level alarm.

CCBT sump level is monitored by conductivity level element LE-1071 with high level switch LSH-1071 inputting to SPCS. The CCBT sump pump (Z-201-CCBT-P-0002) may be started or stopped by actuating two-position control switches HIS-1070.

When sump level decreases, the sump pump is manually stopped. When the level high switch LSH-1071 is activated on rising sump level, sump level high alarm LAH-1071 activates.

CCBT agitator is controlled by software switch HIS-1052 which allows the agitator to be started or stopped.

For further details, see P&IDs W775553 and W775554.

2.6.14 High Pressure Flush System

Instrumentation related to the High Pressure Flush System has been removed.

2.7 SYSTEM INTERFACES

System interfaces are listed in Tables 2.7-1 and 2.7-2.

Table 2.7-1 Saltstone Process Primary Interfaces

Interfacing System	Location	Requirement
G-SD-Z-00001 Z-Area Site	Yard	Provide space for equipment and pipelines
G-SD-Z-00002 Saltstone Structures, and SDUs	Bldg. 210-Z and yard SFT inlet	Provide buildings and support structures for equipment Regulated drain header discharges into the SFT
G-SD-Z-00004 Saltstone Electrical System	Motor control centers, panels and equipment	Provide electrical power (normal, standby, UPS), grounding, lighting, and heat tracing
G-SD-Z-00005 Saltstone HVAC	HVAC stack inlet	Receive exhaust from process vent system
G-SD-Z-00006 Saltstone Support	User	Provide plant air, pig launch air, instrument air, and process water. Provide PLC
G-SD-Z-00007 Saltstone Product Laboratory	Sampling points	Provide analysis of process material
External (ITP)	Salt Solution Hold Tank inlet	Provide salt solution from H-Area
External (Bulk Materials Vendor)	Unloading area	Provide flyash, slag, and cement

Table 2.7-2 Saltstone Process Secondary Interfaces

Interfacing System	Location	Requirement
G-SD-Z-00002 Saltstone Structures and SDUs	Saltstone SDU	Receive Saltstone grout

3.0 OPERATION

Operating procedures are listed in Section 7. There are four modes of Saltstone operation, as selected from HIS-1110. The modes are prestart, start, shutdown, and manual. The Saltstone process operations are described briefly below.

3.1 INITIAL CONFIGURATION

The premix blending/conveying system is a batch operation. When the previous cycle is complete, the systems are idle until the next cycle is initiated. At the beginning of each shift, most material transfer and weighing equipment components are essentially empty, including all air slides, the pneumatic conveyor, the weigh hoppers, and all transfer piping systems. The storage silos have varying inventories of material stored and ready for reclaim. The premix feed bin contains enough inventory to allow it to feed the Saltstone mixer on a semi-continuous basis.

The Saltstone process is a semi continuous operation. The initial system configuration will be an idling condition from the previous run. The SFT will contain spent flush water from the previous shutdown. Alternately one of the SSRTs can be programmed to be the salt feed source. The Saltstone Mixing and Transfer system equipment will be idle.

3.2 STARTUP

3.2.1 Bulk Material Handling

Operations personnel unload trucks and transfer the unloaded material to the appropriate storage silo. Reclamation of materials from the silos and weighing, blending, and conveying operations are then carried out per system operating procedures to support processing.

3.2.2 Saltstone Process

The CCR operator and a field operator first complete prestart up checks. This consists of recording tank levels, checking equipment status, test-starting equipment, lining up pumps and valves, loading the pig launchers (if necessary), and programming certain parameters into the SPCS. A small quantity (<100 gallons) of process water is moved from the CCBT to the SDU to demonstrate that the system can move material. This is accompanied by a high pressure flush of the grout line to the SDU and followed by a pig launch. Grout operations may then be initiated after successful completion of these prestart up checks.

The auto prestart mode is selected and this automatically primes and starts the salt solution feed pump. Salt solution shutoff valve HCV-1055 remains closed to the mixer. Salt solution recirculates to the SFT through pressure control valve PCV-1054 if processing with salt solution. Alternately salt feed can come from SSRT #1 or #2 via HCV-7511 or 7531.

After the prestart is completed, the auto start mode is selected. This automatically opens the CCBT water shutoff and feed valves and starts the Saltstone mixer and the grout hopper agitator. Initially the agitator will run at 10 rpm. When the hopper level gets above 250 gallons (top blade covered) the agitator speed will increase to 55 rpm. After the grout hopper level has reached 285 gallons, the grout pump will be started. Once the grout pump has started, the premix screw feeders to the mixer will be started. This delay is provided to prevent discharging dry solids into the hopper without any liquid present. It also allows the hopper level to near a set

point of 300 gallons before starting the grout pump. The mixer begins to produce grout and discharges it into the hopper.

3.3 NORMAL OPERATION

3.3.1 Bulk Material Handling

See Section 3.2.1.

3.3.2 Saltstone Process

During normal operation of radioactive grout, the CCBT water feed is switched over to salt solution feed. This transition is an automatic process of ramping both feed flow control loop control set points. During normal operation of clean cap grout, the CCBT water remains on recipe to the mixer. The premix feeder is running. The Saltstone mixer is running and producing grout. Instrumentation is provided for monitoring the flow rate of each feed to the mixer.

The grout pump is running, and the hopper level is monitored. Transfer pump discharge pressure, flow rate, and grout density are monitored. The discharge of grout into the SDU is observed by CCTV. The process vent system heater and blower are running. The process vent flow rate is monitored for proper vent system operation.

3.4 SHUTDOWN

3.4.1 Bulk Material Handling

All dry bulk material conveying equipment (air slides and weigh hopper) and both blenders are emptied prior to shut down. Also see Section 3.2.1.

3.4.2 Saltstone Process

The Saltstone process is typically stopped by selecting the auto shutdown mode. Grout production stops, equipment are flushed, a pig is launched to clean the transfer line, and equipment is shut down. The detailed shutdown sequence is described in J-RS-Z-00003, Enhanced Manual Operation – Shutdown Sequence for the Saltstone Facility. System Setback is activated as the first step of shutdown. In System Setback, dry feeds are stopped immediately. Next, The Saltstone Process Control System waits for the following software switches to become activated...

FSL-1127A Saltstone Grout Transfer Line flow switch low (A)
DSLL-1144 Saltstone grout density switch low low
PSL-1129 Grout pump discharge pressure switch low
LSL-8003A Hopper Level Switch Low

It also checks to make sure that the following switches are NOT activated …
LSH-1116
LSHH-1117
When making radioactive grout, the salt solution feed then switches over to CCBT water. When that switchover is complete and the same software switches listed above activate continuously for 30 seconds, liquid feeds are stopped. When making clean cap grout, when those same software switches activate continuously for 30 seconds, liquid feed are stopped. The flushing sequence then starts with addition of clean cap or process water at the mixer and then the hopper for cleaning, and then a small flush through each of the available flush nozzles and the high pressure flush system to ensure no hardened grout accumulation at these addition points that would

impact the next run. Most of the flush water and associated grout solids are transferred to the SDU, with only the relatively clean residual draining to the SFT.

The Saltstone process can also be stopped using other flush sequences (Grout Line Flush, Hopper to SHOC Flush, Grout Line to Hopper Back Flush, Grout Line to SHOC line flush, or Grout Line to Grout Pump Flush). These sequences would typically be selected in the event of the failure of the grout transfer pump or in the event of pluggage downstream of 3-way valve HCV-7001 where the operator desires to attempt to clear the pluggage and proceed straight to shut down. The flushes are performed with IW using HP Flush Pump. The details of these sequences are described in J-RS-Z-00003, Enhanced Manual Operation – Shutdown Sequence for the Saltstone Facility.

3.5 INFREQUENT OPERATIONS

The system can be operated in the manual mode to allow the operator to control equipment manually during maintenance and testing. This mode can also be used in the event of an auto-sequencing problem requiring operator intervention. In this mode, each piece of equipment has minimal interlocks and is operated individually by the operator. This mode is not used for actual Saltstone Mixing and Transfer system operations.

4.0 SET POINTS, SYSTEM LIMITATIONS, AND PRECAUTIONS

4.1 SETPOINTS

Set point designations for controllers, interlocks, and alarms are shown in Table 4.1-1. Set point values for pressure relief (safety) valves are shown in Table 4.1-2.

Table 4.1-1 Set points

Tag No. (Prefix)	Description	Function
Z201-LSH-1056	SFT level switch high	Interlock to inter-area transfer valve, closes HCV-1046 and local alarm indication.
Z201-LAH-1052	SFT high level alarm	Alarm and interlocks start permissive for H-area transfer pump; interlocks SDU 6 drainwater return pumps
Z201-LAL-1052	SFT low level alarm	Alarm and interlock to [PI9]prevent swap over to salt solution to make grout.
Z201-LALL-1052	SFT low low level alarm	Alarm, activate system setback, prevent startup of the SFT pump.
Z201-LDAL-1052	SFT level differential low alarm	Alarm
Z201-LDAH-1052	SFT level differential high alarm	Alarm
Z201-TSL-1066	SFT temperature low	Alarm
Z201-TSH-1066	SFT temperature high	Alarm
Z201-LSH-1071	CCBT sump level switch high	Alarm
Z210-SIT-1107 or Z210-SAL/SALL-1107	Saltstone mixer speed indicator	Speed monitor for mixer, alarm and system setback
Z210-LI-8003	Hopper level indicating controller	Set point input to transfer pump speed controller SIC-9001
Z201-LSH-1174	SFT sump level switch high	Alarm
Z210-FQSH-1118	Mixer process water total flow switch high	Alarm
Z210-LSH-8003	Hopper level switch high	Alarm and activate system setback

Tag No. (Prefix)	Description	Function
Z210-LSHH-8006	Hopper level switch high high	Alarm activates system setback
Z210-SSL-9001	Grout pump speed switch low	Alarm
Z210-PSH-1129	Grout pump discharge pressure switch high	Alarm
Z210-PSHH-1129	Grout pump discharge pressure switch high high	Alarm and activate system setback
Z210-LSL-1071	CCBT sump level switch low	Interlock to trip sump pump
Z210-LSL-8003	Hopper level switch low	Alarm
Z210-LSL-8003A	Hopper Level Switch Low	Stop grout liquid feeds (Setback /Shutdown)
Z210-LSL-8009A	Grout transfer pump lubricant level switch low	Alarm
Z210-LSL-8009B	Grout transfer pump lubricant level switch low	Alarm
Z210-FSL-1127	Saltstone grout transfer line flow switch low	Alarm
Z210-FSL-1127A	Saltstone Grout Transfer Line flow switch low (A)	Stop grout liquid feeds (Setback / Shutdown)
Z210-PSH-1129	Saltstone transfer line pressure switch high	Alarm
Z210-PSL-1129	Grout pump discharge pressure switch low	Stop grout liquid feeds (Setback /Shutdown)
Z210-PSHH-1129	Saltstone transfer line pressure switch high-high	Alarm
Z210-DSH-1144	Saltstone grout density switch high	Alarm
Z210-DSL-1144	Saltstone grout density switch low	Alarm

Tag No. (Prefix)	Description	Function
Z210-DSLL-1144	Saltstone grout density switch low low	Stop grout liquid feeds (Setback /Shutdown)
Z201-PDSH-1088	Process vent HEPA filter differential pressure switch high	Alarm
Z201-PDSL-1088	Process vent HEPA filter differential pressure switch low	Alarm
Z201-TIT-1066	SFT temperature indicating transmitter	Indication
Z201-TSH-1100	Process vent system process vent heater temperature switch high	Interlock with heater
Z210-FIC-1372	Weigh hopper flow indicating controller	Flow control
Z205-LSH-1226	Storage silo #4 level switch high	Alarm
Z205-LSH-1228	Storage silo #1 level switch high	Alarm
Z205-LSH-1229	Storage silo #2 level switch high	Alarm
Z205-LSH-1231	Storage silo #3 level switch high	Alarm
Z210-LSH-1368	Premix feed bin level switch high	Alarm
Z210-LSH-1381	Weigh hopper rotating paddle-type level switch high	Interlock to premix feed bin shutoff valve HCV-1370
Z205-LSHH-1226	Storage silo #4 level switch high-high	Alarm
Z205-LSHH-1228	Storage silo #1 level switch high-high	Alarm
Z205-LSHH-1229	Storage silo #2 level switch high-high	Alarm

Tag No. (Prefix)	Description	Function
Z205-LSHH-1231	Storage silo #3 level switch high-high	Alarm
Z205-LSHH-1237	Silo #4 level switch high-high	Alarm
Z205-LSHH-1238	Silo #1 level switch high-high	Alarm
Z205-LSHH-1239	Silo #2 level switch high-high	Alarm
Z205-LSHH-1240	Silo #3 level switch high-high	Alarm
Z210-LSHH-1368	Premix feed bin level switch high-high	Used in supplier's package (LOS-302)
Z210-LSHH-1380	Premix feed bin rotating paddle-type level switch high-high	Alarm
Z210-LSL-1368	Premix feed bin level switch low	Alarm
Z205-LSLL-1226	Storage silo #4 level switch low-low	Alarm
Z205-LSLL-1228	Storage silo #1 level switch low-low	Alarm
Z205-LSLL-1229	Storage silo #2 level switch low-low	Alarm
Z205-LSLL-1231	Storage silo #3 level switch low-low	Alarm
Z210-LSLL-1368	Premix feed bin level switch low-low	Used in supplier's package (LOS-302)
Z205-PDSH-1227	Silo #4 dust collector pressure diff. switch high	Alarm
Z205-PDSH-1230	Silos #1, 2 and 3 dust collector pressure diff. switch high	Alarm

Tag No. (Prefix)	Description	Function
Z205-PDSH-1268	Air blender No. 1 dust collector pressure diff. switch high	Used in supplier's package (LOS-302)
Z205-PDSH-1273	Weigh hopper dust collector pressure diff. switch high	Used in supplier's package (LOS-302)
Z205-PDSH-1278	Air blender No. 2 dust collector pressure diff. switch high	Used in supplier's package (LOS-302)
Z210-PDSH-1369	Premix feed bin dust collector pressure diff. switch high	Alarm
Z205-PSHL-1267	Air blender/conveyor No. 1 pressure switch	Used in supplier's package (LOS-302) (Blender Cycle Interlock)
Z205-PSH-1271	Premix blending and conveying system pressure switch high	Used in supplier's package (LOS-302)
Z205-PSH-1277	Premix blending and conveying system pressure switch high	Used in supplier's package (LOS-302)
Z205-PSHL-1279	Air blender/conveyor No. 2 pressure switch	Used in supplier's package (LOS-302) (Blender Cycle Interlock)
Z201-PSL-1054	Salt feed tank pump discharge pressure switch low	Alarm and interlock to stop salt feed tank pump
Z210-FSL-1050	Salt solution feed to mixer flow switch low	Alarm and interlock with Saltstone mixer (stops dry material feed)
Z205-RSH-1180	SFT area radiation switch high	Alarm
Z201-PSH-1054	Salt feed tank pump discharge pressure switch high	Alarm
Z201-PIC-1054	Salt solution to mixer pressure indicating controller	Pressure control for salt feed tank pump discharge valve

Tag No. (Prefix)	Description	Function
Z210-FIC-1050	Salt solution to mixer flow indicating controller	Flow control for salt feed tank pump
Z210-SIC-9007	HP flush pump speed indicating controller	Speed control for pump
Z210-SIC-9001	Grout transfer pump speed indicating controller	Speed control for pump
Z210-PSLL-1157	Plant air accumulator No. 2 pressure switch low-low	Alarm
Z210-PSHH-1157	Plant air accumulator No. 2 pressure switch high-high	Alarm
Z210-PSH-1157	Air accumulator No. 2 pressure switch high	Alarm and interlock to close air supply valve HCV-1155 (stop A/C)
Z210-PSL-1157	Air accumulator No. 2 pressure switch low	Alarm and interlock to open air supply valve HCV-1155 (start A/C)
Z210-PSLL-1148	Plant air accumulator No. 1 pressure switch low-low	Alarm
Z210-LSH-1114	Premix feed chute level high	Alarm and interlock to stop feeds
Z210-LSH-1115	Premix feed chute level high	Alarm and interlock to stop feeds
Z210-LSH-1116	Premix feed chute level high	Alarm
Z210-LSHH-1117	Premix feed chute level high high	Alarm
Z210-PSHH-1148	Plant air accumulator No. 1 pressure switch high-high	Alarm
Z210-PSH-1148	Air accumulator No. 1 pressure switch high	Alarm and interlock to close air supply valve HCV-1146 (stop A/C)
Z210-PSL-1148	Air accumulator No. 1 pressure switch low	Alarm and interlock to open air supply valve HCV-1146 (start A/C)
Z201-PDSH-1068	Process vent mist eliminator pressure differential switch high	Alarm

Tag No. (Prefix)	Description	Function
Z201-FSL-1087	Process vent flow switch low	Alarm and interlock to start standby process vent blower
Z201-FSH-1087	Process vent flow switch high	Alarm
Z210-RSH-1614	Premix feedbin area radiation switch high	Alarm
Z210-RSH-1628	Process area radiation switch high	Alarm
Z210-PSL-1476	Instrument air header pressure switch low	Alarm
Z210-PIC-1471	Plant air pressure indicating controller	Valve controller for air to plant air receiver
Z210-PIC-1472	Instrument air pressure indicating controller	Valve controller for air from air dryers to users
Z210-PDSH-1523	Compressed air system for pig launching - inlet air pressure differential switch high	Trouble alarm
Z210-TSH-1535	Compressed air system for pig launching - reciprocating air compressor exiting aftercooler air temperature switch high	Alarm
Z210-LAH-8015	Rupture Pin Alarm	Alarm and interlock to stop grout pump
Z210-PAL-7503	Compressed air system for pig launching – Booster oil pressure switch low	Trouble Alarm
Z210-PALL-7503	Compressed air system for pig launching – Booster oil pressure switch low low	Compressor shutdown interlock
Z210-PDAH-7052	Compressed air system for pig launching – Booster air compressor oil differential switch	Trouble Alarm

Tag No. (Prefix)	Description	Function
Z210-TAHH-7509	Compressed air system for pig launching – Booster air compressor cooling water drain temperature switch high high	Alarm and compressor shutdown interlock
Z210-TAH-7507	Compressed air system for pig launching – Booster air compressor existing air temperature switch high	Trouble Alarm
Z210-PAH-7514A	Compressed air system for pig launching – Booster air compressor existing discharge air pressure switch high	Trouble Alarm
Z210-PAH-7514A	Compressed air system for pig launching – Booster air compressor existing discharge air pressure switch high high	Shutdown alarm
Z210-PDSH-1501A Z210-PDSH-1501B	Instrument air dryer prefilter FLT-0003, FLT-0004 pressure differential switch high	Alarm
Z210-PDSH-1503A Z210-PDSH-1503B	Instrument air dryer prefilter FLT-0005, FLT-0006 pressure differential switch high	Alarm
Z210- PDSH-3550	Instrument air dryer, pressure differential across chambers switch high	Alarm and interlock for dryer bypass valve HCV-3550
Z210- MSH-3304	Instrument air dryer east and west moisture switch high	Alarm
Z210- PAHH-7329	Instrument air dryer disch. header press high high	Shutdown alarm
Z210- PALL-7329	Instrument air dryer disch. header press low low	Shutdown alarm

Tag No. (Prefix)	Description	Function
Z210- FSL-8008	Compressor cooling water flow switch low	Alarm
Z201001-LAH-7501	SSRT #1 Sump Level High	High Alarm and interlocks pump off on Low level
Z201001-TAH-7503	SSRT #1 Temp Alarm High	Alarm to alert operator to shut off agitator
Z201001-TAHH-7503	SSRT #1 Temp Alarm High High	Alarm and protects a SAC and WAC limit
Z201001-TAL-7503	SSRT #1 Temp Alarm Low	Alarm
Z201001-LAH-7506	SSRT #1 Tank Level High	Alarm
Z201001-LAL-7506	SSRT #1 Tank Level Low	Alarm
Z201001-LSH-7506A	SSRT #1 Tank Level Switch High	Shut off the interarea transfer pump
Z201001-LSH-7506	SSRT #1 Tank Level Switch High	Controls agitator running
Z201001-LSL-7506A	SSRT #1 Tank Level Switch Low	Controls agitator running
Z201001-LSL-7506	SSRT #1 Tank Level Switch Low	Controls agitator running
Z201001-LSLL-7508	SSRT #1 Tank Level Switch LowLow	Shut off the SSRT #1 Transfer Pump
Z201001-LSHH-7508	SSRT #1 Tank Level Switch HighHigh	Close HCV-7502
Z201001-DAH-7507	SSRT #1 Tank Density High	Alarm
Z201001-PAL-7510	SSRT #1 Pump Discharge Pressure Low	Alarm
Z201001-PAH-7510	SSRT #1 Pump Discharge Pressure High	Alarm
Z201001-LAL-7575	SSRT #1 Pump Buffer Fluid Level Low	Alarm

Tag No. (Prefix)	Description	Function
Z201001-LAH-7521	SSRT #2 Sump Level High	High Alarm and interlocks pump off on Low level
Z201001-TAH-7523	SSRT #2 Temp Alarm High	Alarm to alert operator to shut off agitator
Z201001-TAHH-7523	SSRT #2 Temp Alarm High High	Alarm and protects a SAC and WAC limit
Z201001-TAL-7523	SSRT #2 Temp Alarm Low	Alarm
Z201001-LAH-7526	SSRT #2 Tank Level High	Alarm
Z201001-LAL-7526	SSRT #2 Tank Level Low	Alarm
Z201001-LSH-7526A	SSRT #2 Tank Level Switch High	Shut off the interarea transfer pump
Z201001-LSH-7526	SSRT #2 Tank Level Switch High	Controls agitator running
Z201001-LSL-7526A	SSRT #2 Tank Level Switch Low	Controls agitator running
Z201001-LSL-7526	SSRT #2 Tank Level Switch Low	Controls agitator running
Z201001-LSLL-7528	SSRT #2 Tank Level Switch LowLow	Shut off the SSRT #1 Transfer Pump
Z201001-LSHH-7528	SSRT #2 Tank Level Switch HighHigh	Close HCV-7502
Z201001-DAH-7527	SSRT #2 Tank Density High	Alarm
Z201001-PAL-7530	SSRT #2 Pump Discharge Pressure Low	Alarm
Z201001-PAH-7530	SSRT #2 Pump Discharge Pressure High	Alarm
Z201001-LAL-7595	SSRT #2 Pump Buffer Fluid Level Low	Alarm

Table 4.1-2 Pressure Relief Valves

PSV Tag No.	Set Pressure, psig	Description	P&ID
1223	1.5 oz/sq in (vac)	Flyash Silo No. 1	W754522
1224	1.5 oz/sq in (vac)	Slag Silo	W754522
1200	110	Blender Air Compressor No. 1	W754524
1201	110	Blender Air Compressor No. 2	W754524
1202	110	Blender Air Compressor No. 3	W754524
1203A	5	Silo No. 4 Air Slide	W754524
1203B	5	Silo No. 4 Air Slide	W754524
1204A	5	Silo No. 1 Air Slide	W754524
1204B	5	Silo No. 1 Air Slide	W754524
1205A	5	Silo No. 2 Air Slide	W754524
1205B	5	Silo No. 2 Air Slide	W754524
1206A	5	Silo No. 3 Air Slide	W754524
1206B	5	Silo No. 3 Air Slide	W754524
1207	120	Blender Air Surge Tank	W754524
1208	120	Blender No. 1	W754524
1209	120	Blender No. 2	W754524
1318	100	Instrument Air Supply	W754524
1222	6 oz/in.^{2} 1.3 oz/in.^{2}(vac)	Premix Feed Bin	W754529
1153	360	Air Accumulator No. 1	W775558
1154	360	Air Accumulator No. 1	W775558
1159	360	Air Accumulator No. 2	W775558
1160	360	Air Accumulator No. 2	W775558
1500A-1	360	Backup Pig Air Manifold #1	W775558
1500A-2	360	Backup Pig Air Manifold #1	W775558
1500B-1	360	Backup Pig Air Manifold #2	W775558
1500B-2	360	Backup Pig Air Manifold #2	W775558
8011	225	Pulsation Dampener Relief	M-M6-Z-0075
8012	290	Rupture Pin alarm	M-M6-Z-0075
7600	-5	SSRT #1 Relief (Vacuum Breaker)	M-M6-Z-00132
7602	-5	SSRT #2 Relief (Vacuum Breaker)	M-M6-Z-00132

4.2 SYSTEM LIMITATIONS AND PRECAUTIONS

Alarms and interlocks are listed in the ladder logic and/or control logic diagrams. Limitations and precautions are as follows:

- The bulk materials must be maintained in a dry condition in order to avoid reclaiming and conveying difficulties.
- The salt solution temperature must be maintained high enough to keep the soluble salts in solution, but also low enough to avoid high temperatures (from heat of hydration) during the curing of the Saltstone in the disposal SDUs.
- Equipment containing radioactive materials must be vented and maintained at negative pressure relative to its surroundings to minimize contamination of the surrounding area.
- Grout mixing and transfer equipment and piping must be cleared of grout in the event of a regular or emergency shutdown. Flushing or pigging is necessary to prevent the grout from setting or solidifying in the equipment or line.
- The butterfly valve in the vent line from the SFT to the process vent system must be fully open when the SFT is being filled with salt solution from the inter-area transfer line. Otherwise, insufficient vacuum in the tank might result in the release of airborne radioactive contamination into the area around the tank.

5.0 SYSTEM UPSETS AND RECOVERY SEQUENCES

5.1 DRY MATERIAL CONVEYING FAILURE

An incomplete dry material batch transfer can occur as the result of an air compressor failure, a power outage, or loss of pressure due to a piping failure. The consequence may be plugging of the pipeline by settled-out material, especially at the bottoms of vertical piping runs. Before transfer operations can begin again, such plugged areas have to be cleared by disconnecting and emptying the (depressurized) plugged pipe, repairs have to be made as necessary to any failed system components, and the pipeline has to be reconnected.

5.2 PROCESS VENT BLOWER FAILURE

Failure of the process vent blower will stop venting of equipment and possibly cause positive pressure in the vapor space of equipment. This could cause or increase contamination of the area around the equipment. A standby blower ensures continuous operation and venting. If no blower is set in the standby mode, alarm HSA-1092 will sound.

Process vent system flow is monitored by flow meter FI-1087. On blower failure, a low flow rate interlock automatically opens the standby blower suction valve and starts the standby blower.

5.3 HEPA FILTER FAILURE OR PLUGGAGE

The HEPA filter in the process vent system removes radioactive particulates from the vent stream that is discharged to atmosphere. If the filter fails by breaching, radioactive emissions to atmosphere will increase. Pluggage of the filter can cause inadequate vent flow, which can result in positive pressure in equipment and increased contamination around the equipment. An installed spare HEPA filter is provided to permit rapid replacement of a failed or loaded filter.

HEPA filter operation is monitored with PDI-1088. High and low pressure drop alarms PDAL-1088 and PDAH-1088 alert the operator to an abnormal condition, whereupon the operator will valve in the spare filter, and the failed or loaded filter will be valved out and replaced.

5.4 SALTSTONE TRANSFER PUMP FAILURE

Failure of a grout pump could cause the grout to solidify in the pump and transfer line. Replacement of these items would then be necessary. A high pressure flush system is provided to attempt the clearing of the transfer line with blockage.

Grout transfer line flow rate and pressure are measured.

5.5 GROUT TRANSFER LINE BLOCKAGE

The grout transfer line is equipped with pressure and flow rate instrumentation. Low flow rate and normal or high pressures indicate that the line is probably blocked, in which case a pig can be launched or the high pressure flush sequence can be used. If flushing and pigging do not clear the line, the portion of the transfer line that is plugged has to be replaced. The entire transfer line can be replaced if necessary.

5.6 SALTSTONE RUPTURE PIN FAILURE

Failure of the rupture pin would cause the grout to be diverted from the transfer line to the overflow container. Replacement of the rupture pin would then be necessary. A high pressure flush system is provided to attempt the

clearing of the transfer line downstream of the rupture pin. It is possible that process piping between the rupture pin and high pressure flush pump, and the rupture pin and the overflow container, would all have to be replaced due to residual grout.

5.7 OVERFLOW OF SALT SOLUTION TANKS

There are three (3) Salt Solution Tanks, the SFT and SSRT #1 and SSRT #2. Overflow of the SFT releases salt solution into the diked area around the tank. The pit prevents this salt solution from leaking into the environment. The SFT has level instrumentation to prevent an overflow. A high-level alarm, LAH-1052, automatically stops the H-Area salt solution transfer pump and interlocks the SDU 6 drainwater return pumps. A second-level element with a hardwired high-level switch automatically closes the salt solution inlet valve to prevent overflow.

If the SFT overflows, the pit will contain the liquid until it can be returned to the SFT for processing.

Overflow of a SSRT releases salt solution into the cell area around the tank. The cells prevent this salt solution from leaking into the environment. The SSRT has level instrumentation to prevent an overflow. There are high-level alarms, LAH-7506 and 7526 that alert the operators and there are high-level switches LSHH-7506A and 7526A that automatically stop the H-Area salt solution transfer pump and close HCV-7504 and HCV-7524. There is also a conductivity probe in the sump that will alert the operator of a full sump, which could be the result of a tank overflow or tank breach.

If the SSRT overflows, the cell will contain the liquid until it can be returned to the appropriate SSRT for processing.

5.8 MIXER OVERFLOW

Overfeeding the mixer can cause the mixer to fill up with grout or feed materials, which in turn can cause grout to overheat and to back up into the liquid and solid feed lines. Level switches are provided on the premix feed chute that will secure dry and liquid feeds to the mixer if activated. Pluggage and contamination of the lines can result. If this occurs, the lines can be cleaned or replaced, if necessary.

5.9 HOPPER OVERFLOW

The hopper can overfill with grout if the discharge line is blocked. Since the hopper has an overflow line, grout will overflow into the overflow container (SHOC). The overflow line in the hopper prevents the grout from backing up into the mixer. If the lines plug, they have to be cleaned or replaced before operation can be resumed.

High-level interlocks LAH-8003 and LSHH-in the hopper stop the feed to the mixer and prevents tank overflow.

5.10 PIG LAUNCH FAILURE

To prevent pluggage, the transfer line is cleaned with a pig prior to shut down. Pig launch is automatically initiated in the shutdown sequence. If the pig fails to launch, an alarm alerts the operator and the backup pig is launched manually.

5.11 SDU OVERFLOW

A CCTV monitors the grout level in SDU. Level markings on the SDU walls/columns indicate the grout level. The level rises slowly (less than 2 inches per hour at 180 gpm) as the 100 ft by 100 ft rectangular SDU 4 cell is filled (SDU 4 is inactive an no longer capable of receiving grout) or (about 1 inch per hour at 180 gpm) as the cylindrical 150 ft diameter SDU 3 is filled, or (significantly less than 1 foot per 24-hour pour at 180 gpm) as the cylindrical 375 ft diameter SDU 6 is filled. Regular data recording by the operator alerts the operator to an overflow. For the remaining SDUs, 2 and 5 are operationally filled and will no longer be receiving radioactive grout.

5.12 LOSS OF ELECTRICAL POWER

The Saltstone process is designed to fail to a safe condition on the loss of electrical power. Standby power from a diesel generator is provided to key equipment such as the Saltstone mixer, grout pump, and other equipment. Instruments and controls necessary for a safe shutdown are on the uninterruptible power supply (UPS) system. These measures ensure that grout can be flushed out of the equipment and a safe shutdown completed. No standby power is provided for dry material handling systems.

6.0 MAINTENANCE

6.1 PREVENTIVE MAINTENANCE, INSPECTION, AND SURVEILLANCE

Maintenance manuals provided by the equipment vendor are listed in Table 2.4-1 for each equipment item.

Operation of the Saltstone transfer pumps and process vent blowers shall be equalized by periodic switching. Spare HEPA filters will not be valved in unless the primary one fails or becomes plugged.

6.2 CORRECTIVE MAINTENANCE

Spares for critical equipment have been ordered, or purchased and are stored on site for future use. Spare equipment purchased includes the following:

Z-201-SFT-P-0001	Salt Feed Tank Pump
Z-210-PIG-EJR-0001	Pig Launching Station
Z-201-SSMT-MIX-0001	Saltstone Mixer

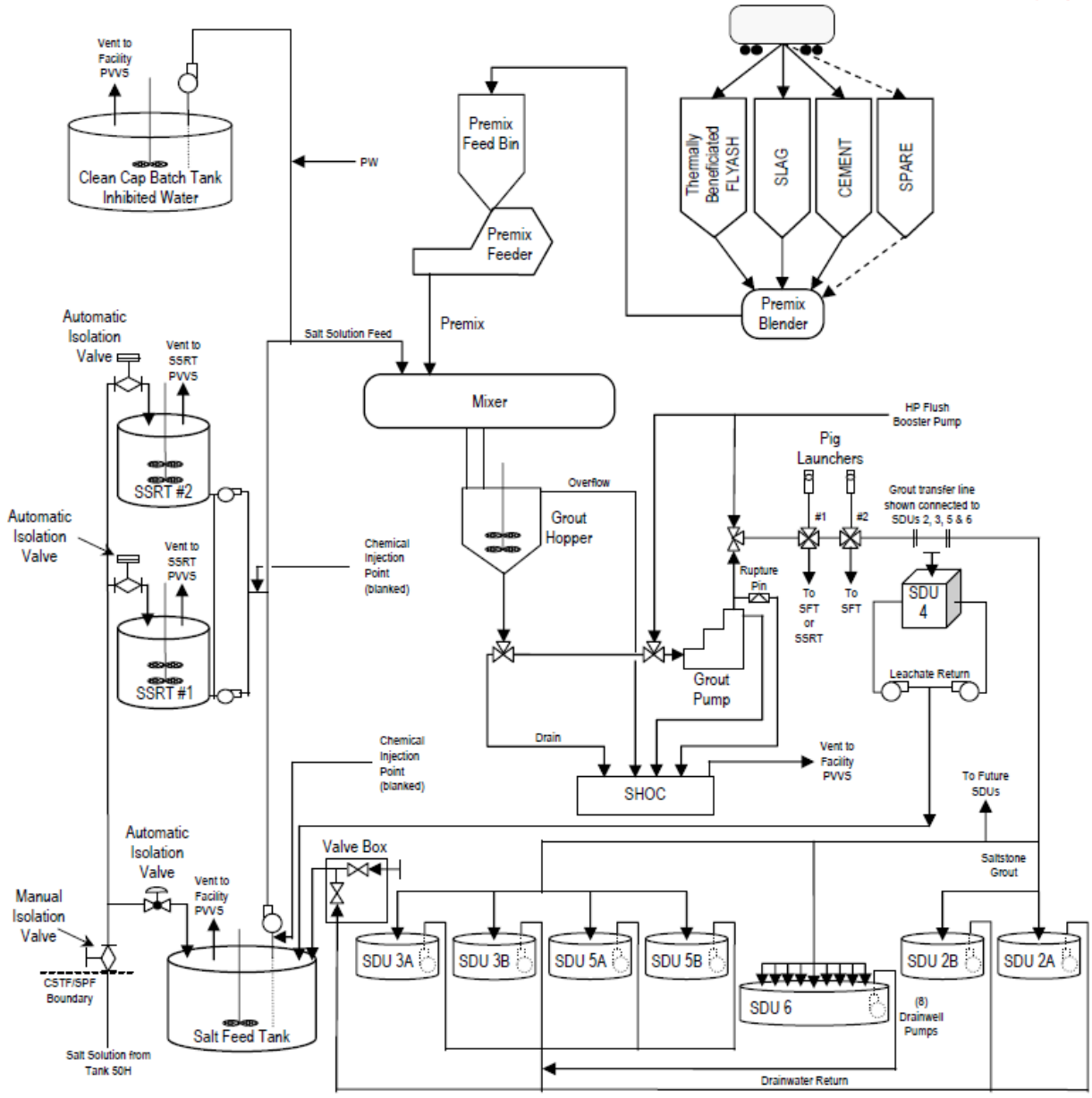

Figure 1: Simplified Process Diagram

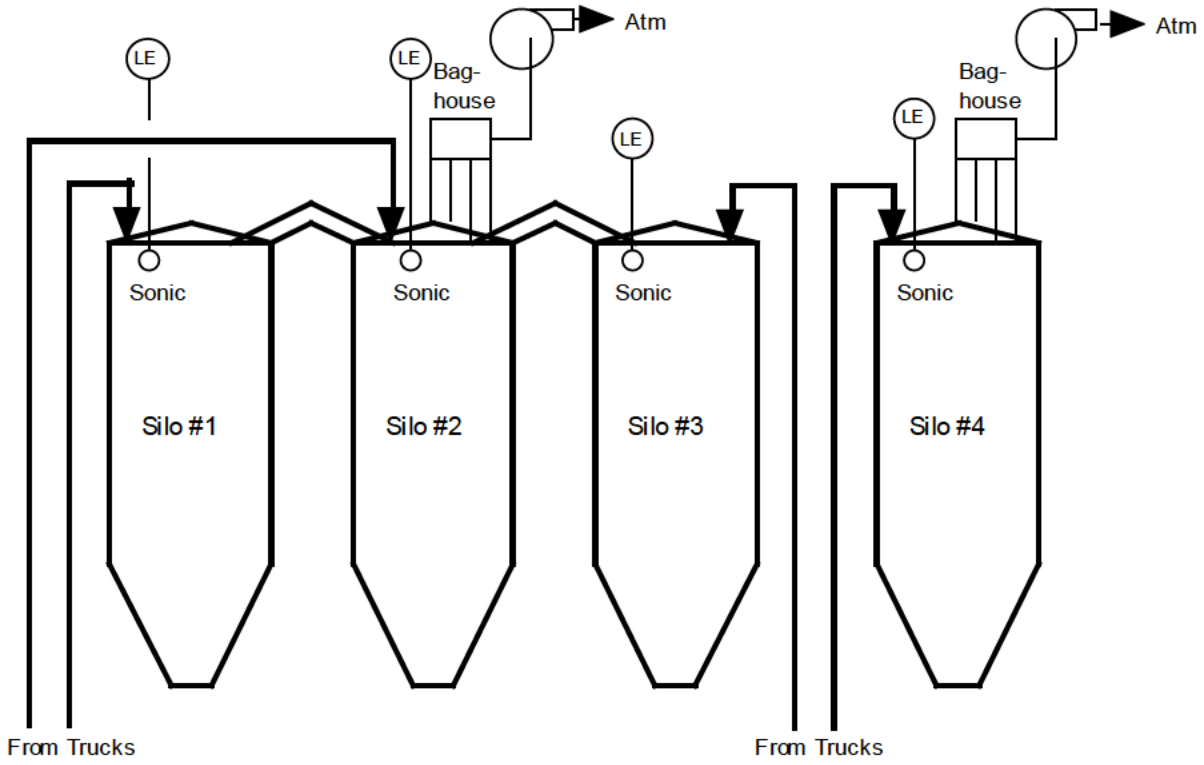

Figure 2: Silo Storage

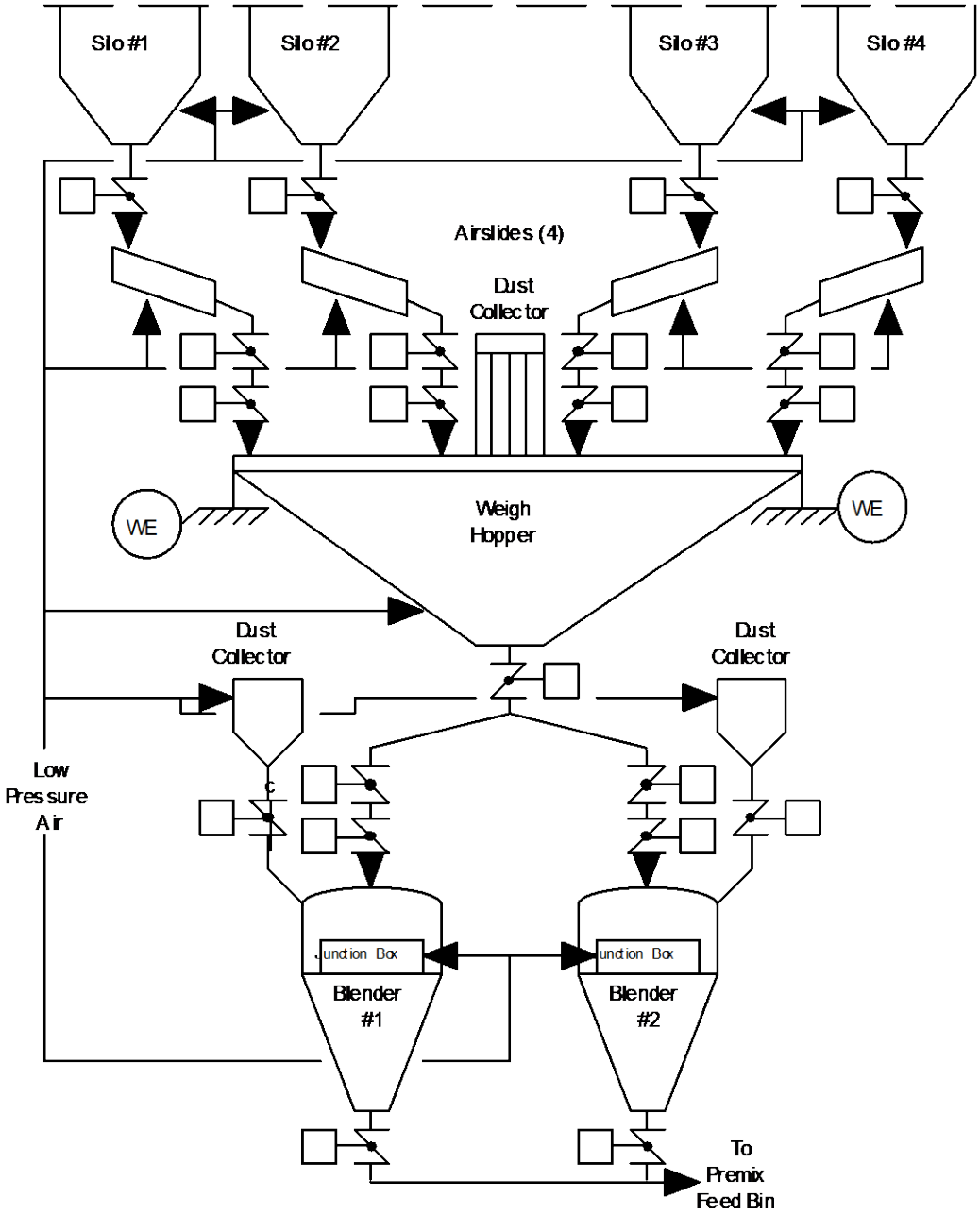

Figure 3: Premix Weighing and Blending

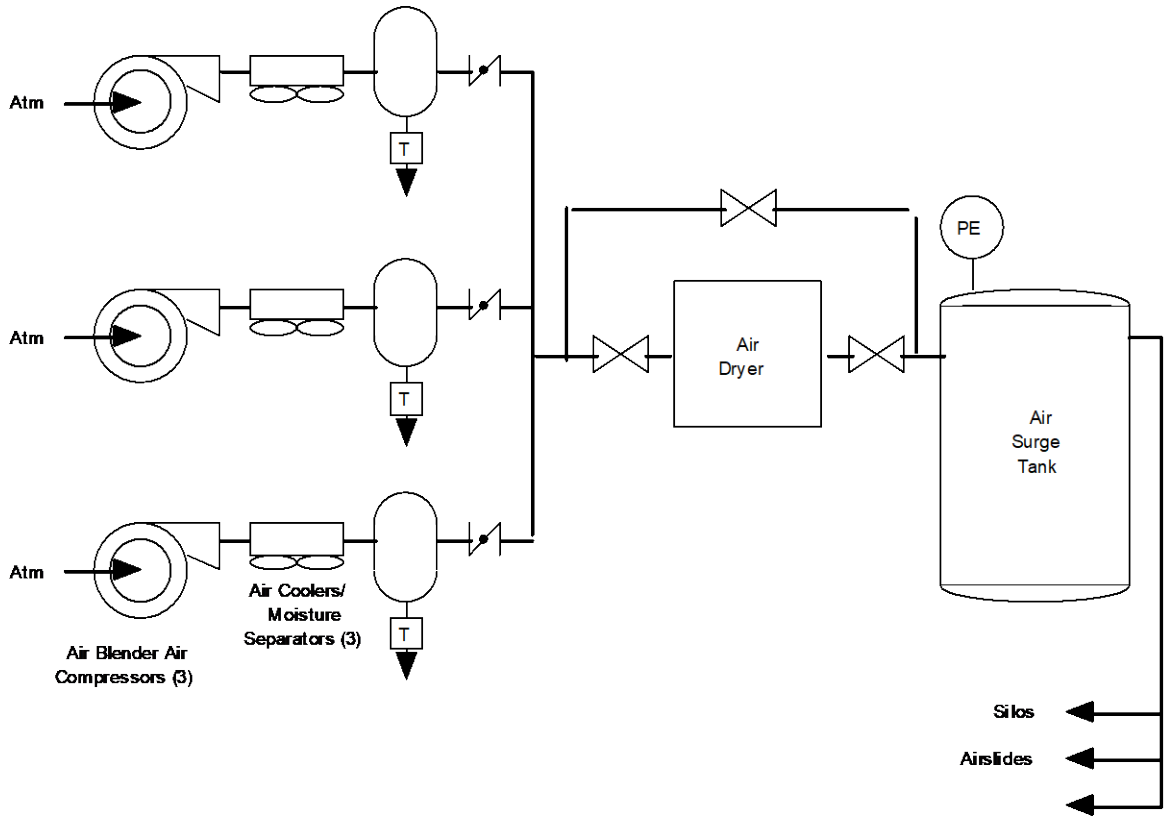

Figure 4: Premix Blending/Conveying Compressed Air Supply

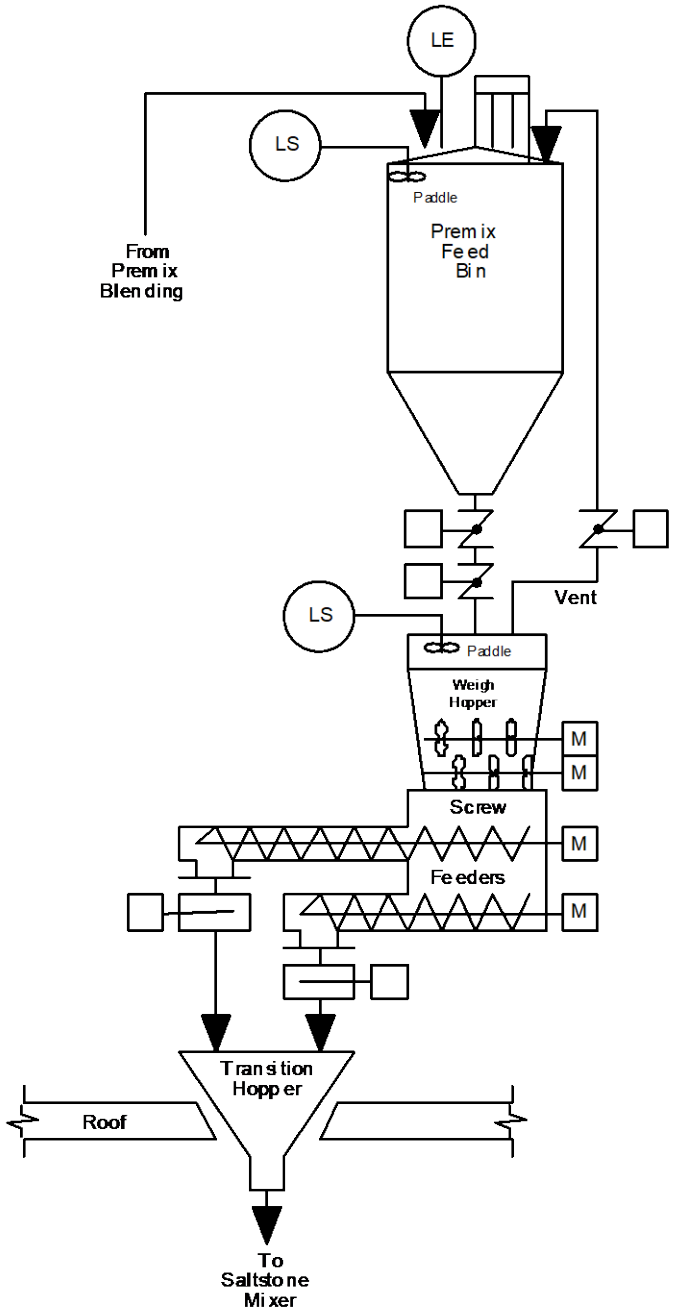

Figure 5: Premix Blending

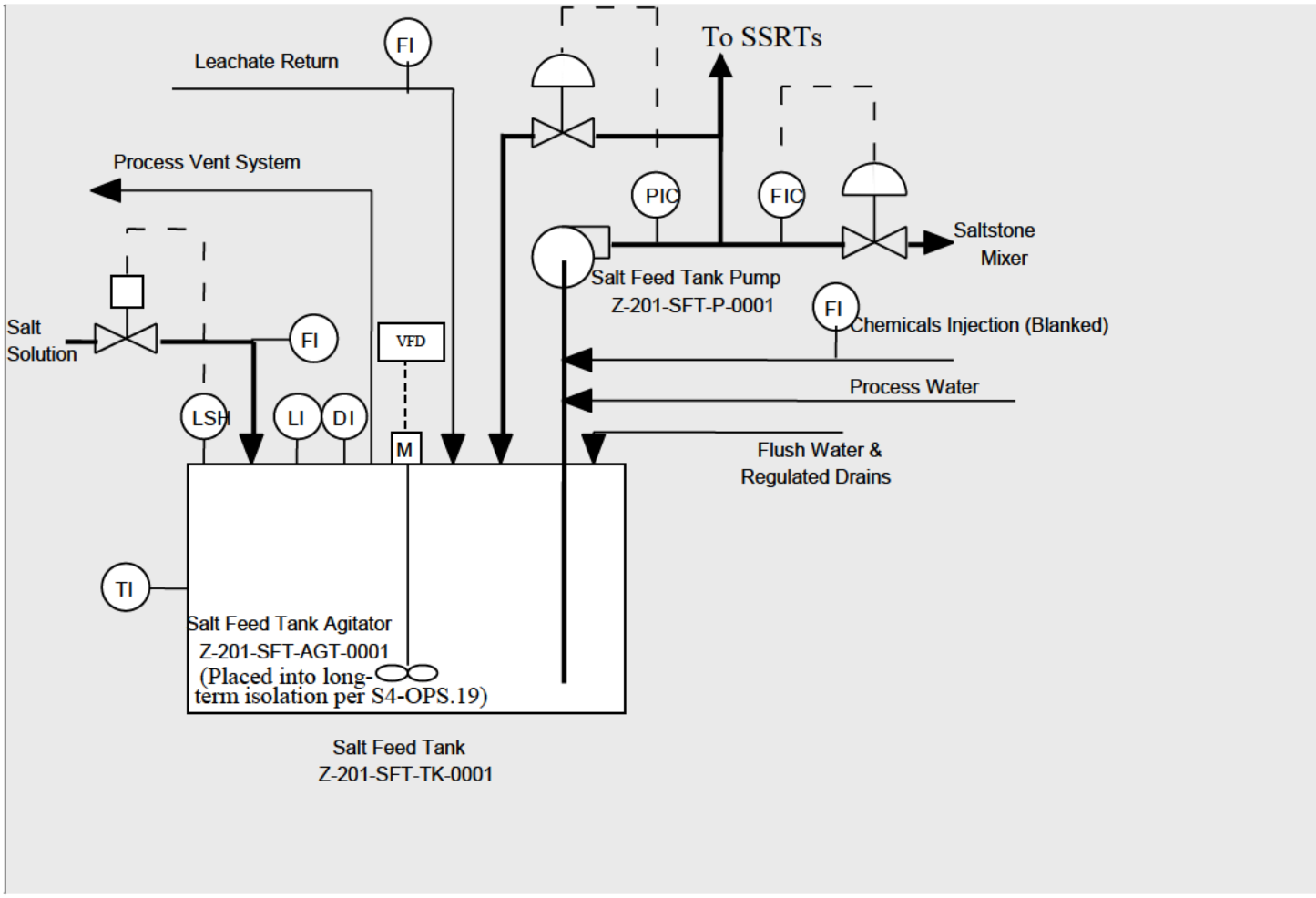

[PI10]

Figure 6: Salt Solution Feed

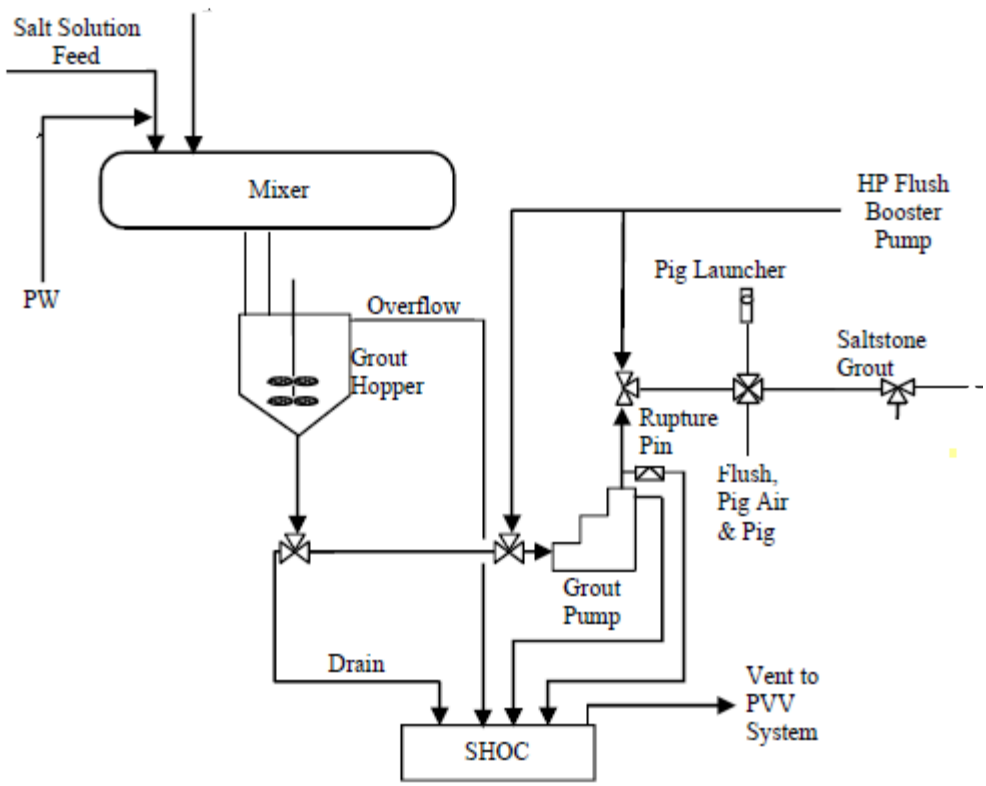

Figure 7: Saltstone Mixing and Transfer

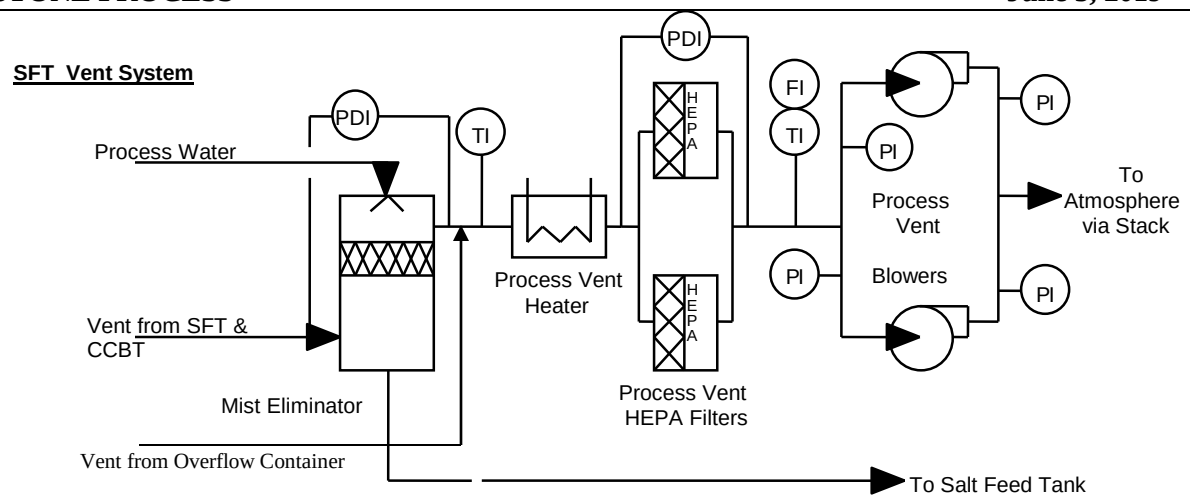

Figure 8: SFT Vent Systems

HCV-1134 or HCV-1136

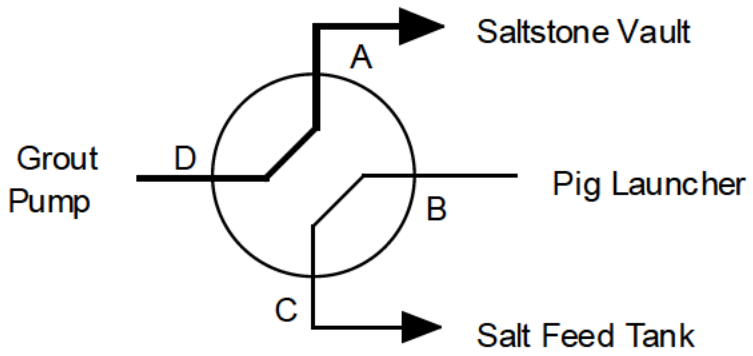

Position D-A : Grout Transfer

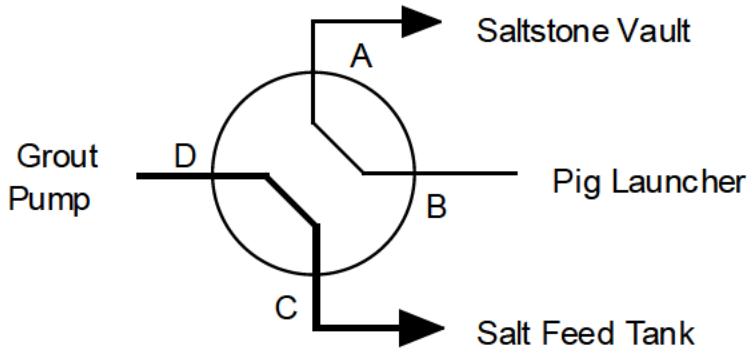

Position D-C : Pig Launch/System Flush

Figure 9: Pig Launching Four-Way Valve

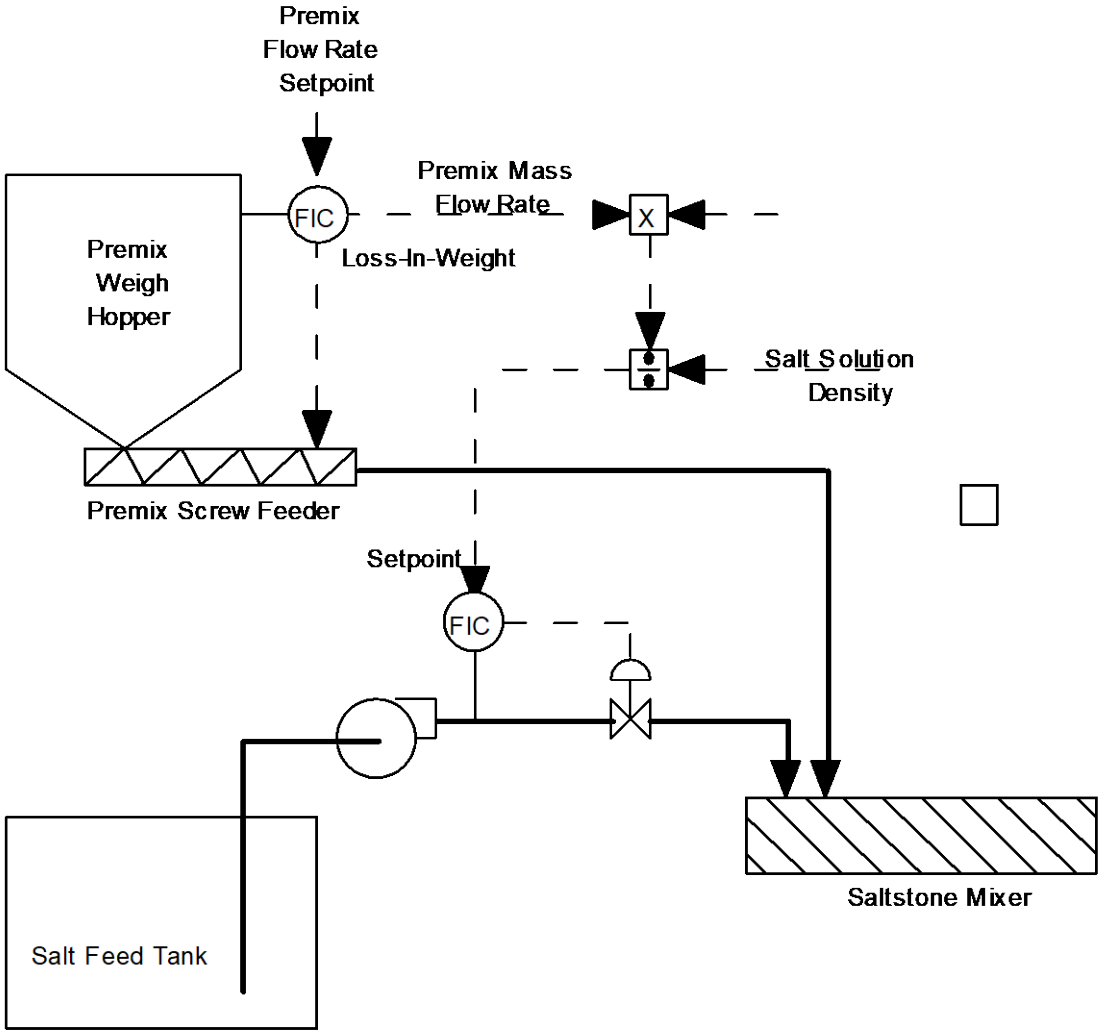

Figure 10: Saltstone Mixing Feed Controls

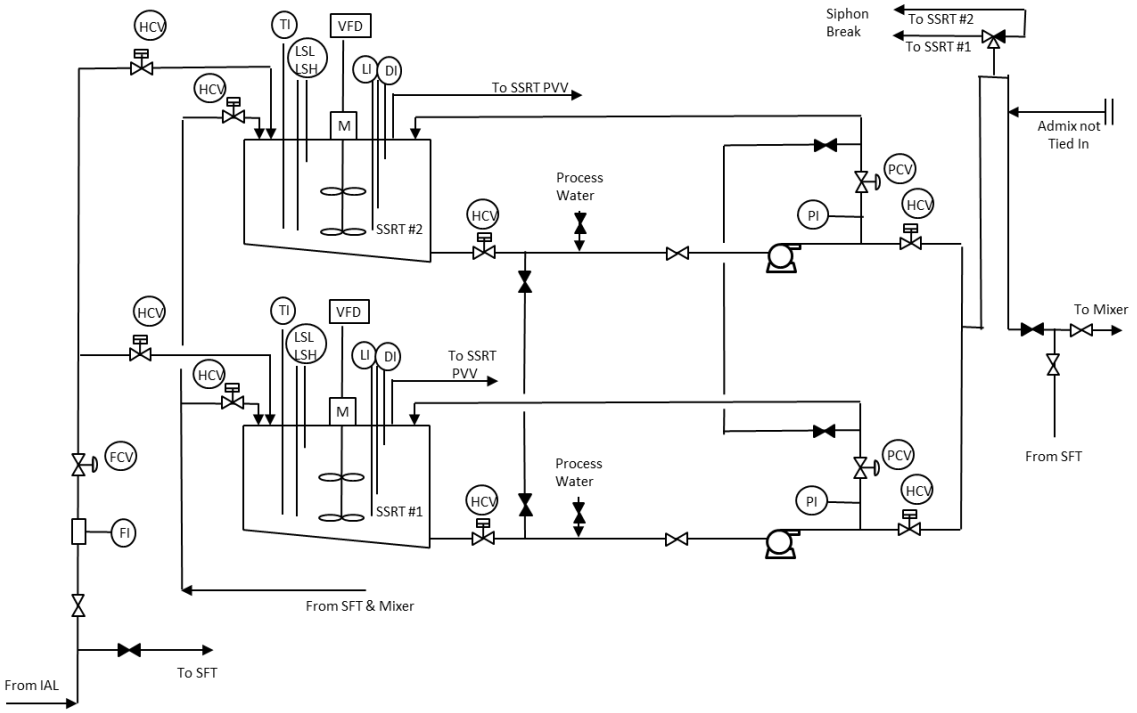

Figure 11: SSRT Process

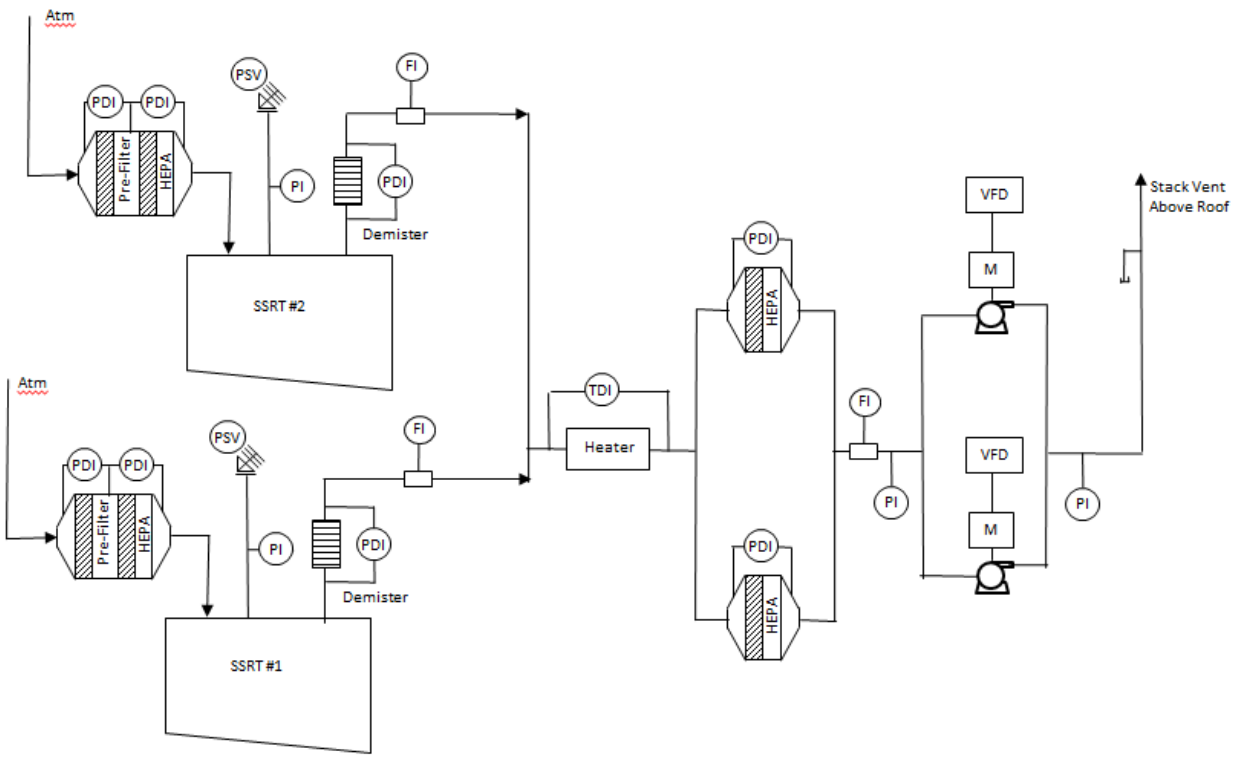

Figure 12: SSRT PVV system

7.0 APPENDICES

7.1 REFERENCES

7.1.1 Z-Area Operating Procedures

SW24.2	3-WAY VALVE POSITION INDICATOR SHEETS MANUAL
SW24.3-ARP(DCS)	SSF DCS ALARM RESPONSE MANUAL
SW24.3-ARP(SDU)	SALTSTONE SDU ALARM RESPONSE MANUAL
SW24.4	ABNORMAL OPERATING PROCEDURE MANUAL
SW24.5	PREMIX BLENDING & CONVEYING SYSTEM OPERATING MANUAL
SW24.6	SALTSTONE PROCESSING INTEGRATED OPERATING MANUAL
SW24.6-AIR	SALTSTONE AIR SYSTEM MANUAL
SW24.6-CCBT	CLEAN CAP BATCH TANK OPERATING MANUAL
SW24.6-POW	SALTSTONE POWER SYSTEMS OPERATING MANUAL
SW24.6-SDU2	SDU #2 OPERATING MANUAL
SW24.6-SDU3	SDU 3 OPERATING MANUAL
SW24.6-SDU5	SDU 5 OPERATING MANUAL
SW24.6-SDU6	SDU 6 OPERATING MANUAL
SW24.6-SFT	SALT FEED TANK OPERATING MANUAL
SW24.6-SPF	SALTSTONE PRODUCTION FACILITY OPERATING MANUAL
SW24.6-SSRT	SSRT OPERATING MANUAL
SW24.6-VENT	VENTILATION SYSTEMS OPERATING MANUAL
SW24.7	SALTSTONE PROCESS AREA MODE CHANGE MANUAL
SW24.8	TEMPERATURE MONITORING SURVEILLANCE MANUAL
SW4-V1-AD-720	DWPF/SS FACILITY OUTAGE PLANNING AND EXECUTION SYSTEM OPERATING MANUAL

7.1.2 Other References

7.1.2.1 IOM, K. C. Kwon to T. M. Monahon and E. Saldivar, “Inter-area Transfer Line Pipe Modeling Calculations”, HLW-HLE-95-0660, dated November 14, 1995.

7.1.2.2 S-CHA-Z-00001, Rev. 4, CONSOLIDATED HAZARD ANALYSIS FOR THE SALTSTONE FACILITY SALT SOLUTION RECEIPT TANK (SSRT) PROJECT.

7.1.2.3 F-PFHA-Z-00001, Rev. 0, PROJECT FIRE HAZARDS ANALYSIS FOR SDI SALTSTONE PRODUCTION FACILITY MODIFICATIONS.

7.1.2.4 S-CLC-Z-00073, Rev. 3, SALTSTONE SSRT TANK FLAMMABILITY ANALYSIS (U).

7.1.2.5 WSRC-SA-2003-00001, Rev. 15, July 2018, Saltstone Facility Documented Safety Analysis.

7.2 PARAMETERS LIST

TBD

7.3 DRAWINGS AND SPECIFICATIONS

7.3.1 Piping and Instrument Drawings

W750001	Symbols and Legend-Flow and P&I Diagram–Sheet 1 of 4
W750002	Symbols and Legend-Flow and P&I Diagram–Sheet 2 of 4
W750003	Symbols and Legend-Flow and P&I Diagram–Sheet 3 of 4
W750004	Symbols and Legend-Flow and P&I Diagram–Sheet 4 of 4
W754522	Cement and Flyash Storage Silos
W754524	Premix Blending and Conveying System (Sheet 1 of 2)
W754529	Premix Feed Bin and Weight Hopper
W775547	Saltstone Pig Launching
M-M6-Z-0003	Clean Cap Batch Tank (Sht 1 of 2)
M-M6-Z-0019	Clean Cap Batch Tank (Sht 2 of 2)
W775555	Process Vent System
W775558	Line Flush Air Accumulator
M-M6-Z-0044	Premix Blending and Conveying System (Sheet 2of 2)
M-M6-Z-0073	Saltstone Mixer
M-M6-Z-0074	Salt Feed Tank
M-M6-Z-0075	Saltstone Grout Pump and Hopper
M-M6-Z-00109	SSRT Process P&ID
M-M6-Z-00110	Future Admixture chemicals tie-in to SSRT
M-M6-Z-00132	SSRT PVV System P&ID

7.3.2 General Arrangement/Equipment Location Drawings

W775900	Saltstone Process Building-210Z-Plan
W775901	Saltstone Process Building-210Z-Plan
W775902	Saltstone Process Building-210Z-Sect. A
W775903	Saltstone Process Building-210Z-Sect. B
W775904	Saltstone Process Building-210Z-Sect. C
W775905	Saltstone Process Building-210Z-Sect. D
W775907	Saltstone Process Building-210Z-Plan
W775908	Saltstone Process Building-210Z-Plan and Sect.
W775910	Salt Solution Hold and FWRTs-Plan
W775911	Salt Solution Hold and FWRTs-Plan
W775912	Salt Solution Hold and FWRTs-Sections
W775920	Cement/Flyash Unloading-Plan
W775921	Cement/Flyash Storage Silos-Plan
W775922	Cement/Flyash Silos-Sections A & D
W775925	Cement/Flyash Storage Silos-Plan at Grade El 291'-0" & Sect. C
W775926	Cement/Flyash Silos-Section B
W775927	Cement/Flyash Storage Silos-Plans at El 300'-6" & 309'-6"
W775928	Cement/Flyash Storage Silos-Plans at El 319'-6" & 335'-1-1/2"
W775929	Cement/Flyash Silos-Sections
W780515	Operations Area Yard Piping-Profiles, Sections and Details
W780518	Saltstone Grout Pipeline-Plan, Profile and Details

P-PE-Z-00009 SSRT General Arrangement
E-ER-Z-00019 SSRT General Equipment Arrangement

7.3.3 Ladder Logic Diagrams

J-J2-Z-00029 SDU Organic Modification Cells 2A, 2B, 4 B through H, Trains A & B

7.3.4 Electrical Single Line Diagrams

W774003 Primary & Secondary Substation Bldg. Single Line Diagram 480V MCC B121
W774004 Primary & Secondary Substation Bldg. Single Line Diagram 480V MCC B122
W774005 Process Building Single Line Diagram 480V MCC B123 (Standby Power)
W774006 Process Building Single Line Diagram 480V MCC B124, Sheet 1
W774010 Process Building Single Line Diagram 480V MCC B124, Sheet 2
E-E2-Z-00022 SSRT Process Single Line Diagram

7.3.5 Saltstone Construction Specifications

E21 Integral & Fraction HP Induction Motors
E43 Electrical Heat Tracing System
J82 Saltstone Process Control System
M10 Compressed Air Receivers
M97 Cold Chemical Vent Blowers
M99 Cold Feed Agitators
M187 Vertical Sump Pumps
M201-01 Scope of Work for Mixer Vent Scrubber
M216 Saltstone Vertical Cantilevered Pumps
M228 Saltstone Grout Transfer Pumps
M256 Chemical Metering Pumps
M441 Railcar Unloading Pneumatic Conveyor
M442 Premix Feed Bin and Weigh Hopper with Screw Feeder
M443 Premix Blending and Transfer Pneumatic Conveying System
M444 Saltstone Shop Fabricated Tanks
M445 Saltstone Field Erected Tanks
M446 Field Erected Silos
M448 Pig Discharge Device
N1 Pig Launching Station
N3 Saltstone Mixer
P11 Furnishing and Installation of Process and Service Piping
P25 Furnishing Miscellaneous Piping Components
G-SOW-Z-00002 SPF MODIFICATIONS FOR TANK 50 RETURN TO SERVICE SALT DISPOSITION INTEGRATION PROGRAM (SDIP)
M-SOW-G-00029 FIELD ERECTED API-650 TANKS FOR THE SDI PROJECT
M-SOW-H-00169 TANK 50 RETURN TO SERVICE
M-SPP-Z-00004 SALT SOLUTION RECEIPT TANK (SSRT) AGITATORS

7.3.6 OTHERS

Deleted

APPENDIX K: DEFENSE IN DEPTH/IMPORTANT TO SAFETY COMPONENTS

The SSMT/SFT/PIG/CCBT Systems contain components that are DID/ITS per WSRC-SA-2003-00001, Table 3.6-13. The Safety functions are the following:

- Provide passive containment to minimize release of material to the environment, or to building 210-Z.
- Provide pressure relief to prevent loss of grout transfer line integrity to minimize release of material to the environment – PSV 8012.
- Close FCV-1046 (Inter-area transfer line) to prevent salt feed tank overflow and prevent material release to the environment (hardwire).
- Stop liquid feed to the mixer, to minimize the amount of material released from the building 210-Z process room (software).

DID Item	CLI	Description
3	Z-201000-WTS-L-SSP4	SEGMENT OF INTER-AREA TRANSFER LINE (IAL) ENTERING CCBT ENCLOSURE
3	Z-201000-SFT-L-SSP30	INTER-AREA TRANSFER LINE LINE FROM CCBT ENCLOSURE TO SFT
3	Z-201000-SSRT-V-0040	INTER-AREA TRANSFER LINE MANUAL ISOLATION VALVE
3	Z-201000-SFT-V-0051	SFT SALT SOL DRAIN TO SFT UPSTREAM ISOLATION VALVE
3	Z-201000-SFT-FE-1046	FLOW ELEMENT ON INTER-AREA TRANSFER TO SFT
3	Z-201000-SFT-FCV-1046	FLOW CONTROL VALVE ON INTER-AREA TRANSFER LINE TO SFT
3	Z-201000-SFT-V-1046-1	FCV-1046 INLET ISOLATION VALVE
3	Z-201000-SFT-V-1046-2	FCV-1046 OUTLET ISOLATION VALVE
3	Z-201000-SFT-V-1046-3	FCV-1046 BYPASS ISOLATION VALVE
3	Z-201000-SFT-V-1046-4	FCV-1046 OUTLET DRAIN VALVE
4	Z-201000-SFT-L-FSW268	SALT FEED PUMP SUCTION LEG FROM SFT
4	Z-201000-SFT-HCV-1183	SALT FEED TANK PUMP SUCTION CONTROL VALVE
4	Z-201000-SFT-V-0002	SALT FEED TANK PUMP SUCTION ISOLATION VALVE
4	Z-201000-SFT-L-SRK99	ADMIXTURE FEED LINE TO SFT PUMP SUCTION LINE
4	Z-201000-SFT-CV-7020	ADMIXTURE ADDITION CHECK VALVE
4	Z-201000-SFT-P-0001	SALT FEED TANK PUMP
4	Z-201000-SFT-V-0003	SALT FEED TANK PUMP SUCTION DRAIN VALVE
4	Z-201000-SFT-L-SFT01	SALT SOLUTION FEED FROM SFT PUMP TO SFT-V-0060
4	Z-201000-SFT-L-SFT02	SALT SOLUTION RECIRC LINE TO SALT FEED TANK NOZZLE N3
4	Z-201000-SFT-V-1054-1	PT-1054 INSTRUMENT ROOT ISOLATION VALVE
4	Z-201000-SFT-V-1054-2	SFT PUMP RECIRCULATION, PCV-1054 OUTLET ISOLATION VALVE
4	Z-201000-SFT-V-1054-3	SFT PUMP RECIRCULATION, PCV-1054 INLET ISOLATION VALVE
4	Z-201000-SFT-V-1054-4	SFT PUMP RECIRCULATION DRAIN VALVE
4	Z-201000-SFT-PCV-1054	SFT PUMP RECIRCULATION PRESSURE CONTROL VALVE
4	Z-201000-SSRT-V-0059	MIXER FEED LINE DRAIN TO SFT (AT SFT RECIRC LINE LSFT102)
4	Z-201000-PWS-HCV-1182	CONTROL VALVE, PROCESS WATER TO SFT PUMP
4	Z-201001-PWS-L-LPW506	PROCESS WATER LINE TO SFT-P-0001
4	N/A	SEAL POT ON PROCESS WATER TO SFT PUMP

DID Item	CLI	Description
4	Z-201000-SFT-L-SFT03	SALT SOLUTION FEED TO Z-201000-SSRT-V-0001
4	Z-201000-SSRT-V-0052	SSRT TANK ISOLATION FROM MIXER VALVE
4	Z-201000-SFT-L-SFT03	SALT SOLUTION FEED FROM SFT-V-0060 to SSRT-V-0001
4	Z-201000-SFT-V-7582-1	HCV-7582 UPSTREAM ISOLATION
4	Z-201000-SFT-HCV-7582	SFT DISCHARGE TO MIXER FEED - CONTROL VALVE
4	Z-201000-SFT-CV-7582	SFT MIXER FEED TO SSRT-V-0001 CHECK
4	Z-201000-SFT-V-7582-3	HCV-7582 DRAIN VALVE
4	Z-201000-SSRT-V-0053	SFT FEED PUMP ISOLATION FROM MIXER
4	Z-201000-SSRT-V-0058	MIXER FEED LINE DRAIN TO SFT (AT V-0001)
4	Z-201000-SSRT-V-0001	MIXER FEED LINE ISOLATION
4	Z-201000-SFT-L-RDD1194	SALT SOLUTION TRANSFER LINE FROM SSRT-V-0001 TO Z210 PROCESS ROOM (UNDERGROUND TRANSFER LINE SEGMENT FROM SFT CONTAINMENT WALL TO PROCESS ROOM)
4	Z-201000-SFT-L-SSP20	SALT SOLUTION TRANSFER LINE IN Z210 PROCESS ROOM, FROM ENTRY AT TRENCH TO MIXER
4	Z-210000-SFT-FE-1050	MIXER FEED FLOW ELEMENT
4	Z-210000-SFT-V-1050-1	FCV-1050 INLET ISOLATION VALVE
4	Z-210000-SSRT-CV-0005	ADMIXTURE ADDITION CHECK VALVE
4	Z-210000-SFT-FCV-1050	MIXER FEED FLOW CONTROL VALVE
4	Z-210000-SFT-V-1050-2	FCV-1050 OUTLET ISOLATION VALVE
4	Z-210000-SFT-V-1050-4	FCV-1050 DRAIN ISOLATION VALVE
4	Z-210000-SFT-V-1055-1	HCV-1055 INLET ISOLATION VALVE
4	Z-210000-SFT-HCV-1055	MIXER FEED HAND CONTROL VALVE
4	Z-210000-SFT-V-1055-2	HCV-1055 OUTLET ISOLATION VALVE
4	Z-210000-SFT-V-1055-4	HCV-1055 INLET DRAIN VALVE
4	Z-210000-PWS-CV-0021	MIXER PROCESS WATER INLET CHECK VALVE
4	Z-210000-SFT-L-LPW455	PROCESS WATER LINE FROM PWS-CV-0021 TO MIXER FEED LINE SFT-L-SSP20
5	Z-210000-SSMT-MIX-0001	SALTSTONE MIXER
5	N/A	MIXER DISCHARGE CHUTE TO HOPPER
5	N/A	N1 & N2 MIXER SPRAY NOZZLE ASSEMBLIES (MIXER CHUTE) M
5	Z-210000-SSMT-L-108	FLUSH WATER LINE TO THE MIXER SPRAY NOZZLE ASSEMBLIES (N1 & N2)
5	Z-210000-SSMT-HCV-7005	FLUSH WATER CONTROL VALVE FOR N1 & N2 SPRAY NOZZLE ASSEMBLIES
5	Z-210000-SSMT-TK-9000	GROUT PUMP HOPPER
5	Z-210000-SSMT-HCV-8006	HOPPER HI BUBBLER LEVEL SWITCH AIR/FLUSH CONTROL VALVE
5	Z-210000-SSMT-L-307	IA FROM HCV-8006 INTO HOPPER, HI BUBBLER
5	Z-210000-SSMT-L-119	HOPPER OVERFLOW LINE TO SHOC
5	Z-210000-SSMT-HCV-7007	FLUSH WATER CONTROL VALVE, GROUT/AIR INTERFACE SPRAY NOZZLE ASSEMBLIES
5	Z-210000-SSMT-L-107	FW LINE FROM HCV-7007 TO SPRAY NOZZLE ASSEMBLIES (N6D/N6E/N6F)

DID Item	CLI	Description
5	Z-210000-SSMT-HCV-7012	FLUSH WATER CONTROL VALVE, LOWER HOPPER/AGITATOR SPRAY NOZZLE ASSEMBLIES
5	Z-210000-SSMT-L-106	FW LINE FORM HCV-7012 TO NOZZLE SPRAYER ASSEMBLIES (N6A/N6B/N6C)
5	Z-210000-SSMT-L-111	GROUT TRANSFER LINE FROM GROUT HOPPER TO GROUT PUMP SUCTION
5	Z-210000-SSMT-HCV-7000A	GROUT HOPPER OUTLET VALVE
5	Z-210000-SSMT-HCV-7000B	GROUT HOPPER OUTLET VALVE
5	Z-210000-SSMT-P-9001	SALTSTONE GROUT PUMP
5	Z-210000-SSMT-L-113	GROUT TRANSFER LINE FROM GROUT PUMP TO PULSATION DAMPNER VSL-9002
5	Z-210000-SSMT-L-114	GROUT TRANSFER LINE FROM GROUT PUMP TO PULSATION DAMPNER VSL-9003
5	Z-210000-SSMT-VSL-9002	PULSATION DAMPENER
5	Z-210000-SSMT-VSL-9003	PULSATION DAMPENER
5	Z-210000-SSMT-L-115	GROUT TRANSFER LINE FROM FROM PULSATION DAMPNERS TO HCV-7001
5	Z-210000-SSMT-PSV-8012	GROUT LINE OVERPRESSURE DEVICE RUPTURE PIN VALVE
5	Z-210000-SSMT-HCV-7001	GROUT TRANSFER LINE FLUSH SELECTOR VALVE
5	Z-210000-SSMT-L-117	GROUT TRANSFER LINE FROM HCV-7001 TO HCV-1136
5	Z-210000-SSMT-FE-1127	GROUT PUMP DISCHARGE FLOW ELEMENT
5	Z-210000-SSMT-FIT-1144	GROUT TRANSFER LINE FLOW/DENSITY INDICATOR
5	Z-210000-PIG-HCV-1136	PIG LAUNCHER #1 OUTLET 4-WAY VALVE
5	Z-210000-SSMT-L-SAP8	GROUT TRANSFER LINE FROM HCV-1136 TO HCV-1134
5	Z-210000-PIG-HCV-1134	PIG LAUNCHER #2 OUTLET 4-WAY VALVE
5	Z-210000-SSMT-L-SAP26	GROUT TRANSFER LINE FROM HCV-1134 TO 210-Z PROCESS ROOM WALL
6	Z-210000-SSMT-PSV-8012	OVERPRESSURE DEVICE RUPTURE PIN VALVE
8	Z-201000	CLEAN CAP BATCH TANK ENCLOSURE
9	Z-201000	SALT FEED TANK ENCLOSURE
10	Z-210000	PROCESS ROOM ENCLOSURE
10	Z-201000-RDD-L-284	210-Z PROCESS ROOM FLOOR DRAIN TO SALT FEED TANK (SFT)
10	Z-201000	SALT FEED TANK ENCLOSURE
13	Z-201000-SFT-LE-1056	SALT FEED TANK HIGH LEVEL ELEMENT
13	Z-201000-SFT-LSH-1056	SALT FEED TANK HIGH LEVEL SWITCH
13	Z-201000-EEP-PNL-TBA1001/CKT 2	SFT/SSHT INSTRUMENTATION FUSE BOX
14	Z-210000-SSMT-LE-1114	MIXER PREMIX CHUTE HIGH LEVEL ELEMENT
14	Z-210000-SSMT-LSH-1114	MIXER PREMIX CHUTE HIGH LEVEL SWITCH
14	Z-201000-EEP-PNL-TBC1001/CKT 3	Z-201000-EEP-PNL-TBC1001/CKT 3
14	Z-210000-SSMT-LE-1115	MIXER PREMIX CHUTE HIGH LEVEL ELEMENT
14	Z-210000-SSMT-LSH-1115	MIXER PREMIX CHUTE HIGH LEVEL SWITCH

DID Item	CLI	Description
14	Z-201000-EEP-PNL-TBC1001/CKT 4	Z-201000-EEP-PNL-TBC1001/CKT 4

APPENDIX N: SALTSTONE POTENTIAL TRAPPED HYDROGEN LOCATIONS

NAME	COMPONENT ID	DRAWING
SALT FEED TANK DSS FROM TK-50	SSP4-P48-4/SSP30-P117-4 FROM PEN2351-P224 TO V1046-2 & V-1046-3	M-M6-Z-0074
SALT FEED TANK LEVEL BUBBLER	INSTRUMENT AIR PIPING FROM V-1051-1 THRU INSTRUMENTS TO SFT	M-M6-Z-0074
CCBT SUMP PUMP PIPING	FSW41-P258-2 FSW39-PS101C-2	M-M6-Z-0074 W775554
SFT COLD SAMPLER PIPING	PLA569-P4B-1 & PLA569-P4B-1/2 FROM PA-V-0033 THRU SAMPLER TO SFT	M-M6-Z-0074 W754642
SFT TRANSFER PUMP PIPING	PUMP SUCTION: FSW268-P258-3 FROM SFT TO SF PUMP (including LPW506-P64A-2 to Seal Pot & SRK99-P215-1/2 from HCV-7019 to HCV-1183 PUMP DISCHARGE: SFT01-P117-3 & SFT03-P117-3 FROM SF PUMP TO HCV-1055 (including SFT02-P117-2 to PCV-1054, RDD1194-P255-3/SAP9-255-3, SSP20-P258-3, SAP20A-P258-1/2 & LPW 455-P64A-3 to Seal Pot) PIG Launch #1 to SFT - RDD1197-P255-3 SSRT-V-0001 to SFT - SSRT18-P117-1	M-M6-Z-0073 M-M6-Z-0074
EAST SIDE LEACHATE COLLECTION SYSTEM	SSD1-P224-2 FROM V-0004L, SSD2-P224-2 FROM V-0004K, SSD3-P224-2 FROM V-0004J, SSD13-P224-2 FROM V-0004H, SSD4-P224-1 1/2, SSD11-P224A-1, SSD11-P224-1, SSD5-P224A-1, SSD2-P224A-1 UP TO V-0101	M-M6-Z-0095 M-M6-Z-0045

WEST SIDE LEACHATE COLLECTION SYSTEM	SSD9-P224-2 FROM V-0004F, SSD6-P224-2 FROM V-0004E, SSD10-P224-2 FROM V-0004D, SSD14-P224-2 FROM V-0004B, SSD8-P224-1 1/2, SSD12-P224A-1, SSD12-P224-1, SSD7-P224A-1, SSD6-P224-1 UP TO V0201	M-M6-Z-0095 M-M6-Z-0045
SDU 2 DRAINWATER COLLECTION SYSTEM	SSD100-P224-2 FROM P-0001 TO MOV-2101 SSD102-P224-2 FROM P-0002 SSD104-P224-2 FROM V-2023 SSD103-P224-2 FROM V-2022 Z-451002-SSD-L-0010A Z-451002-SSD-L-0020A Z-451002-SSD-L-0031A Z-451002-SSD-L-0032A Z-451002-SSD-L-0010B Z-451002-SSD-L-0020B Z-451002-SSD-L-0031B Z-451002-SSD-L-0032B	M-M6-Z-00100 C-CH-Z-00014
SDU 5 DRAINWATER COLLECTION SYSTEM	SSD501-P224-2 FROM P-0001 TO MOV-5100 SSD502-P224-2 FROM P-0002 TO MOV-5100 SSD501-P224-2 FROM MOV-5100 TO MOV-5200 SSD501-P224-2 FROM MOV-5200 TO V-2004	M-M6-Z-00118 C-CH-Z-00020

	Z-451005-SSD-L-0010A Z-451005-SSD-L-0020A Z-451005-SSD-L-0031A Z-451005-SSD-L-0032A Z-451005-SSD-L-0010B Z-451005-SSD-L-0020B Z-451005-SSD-L-0031B Z-451005-SSD-L-0032B SSD508-P224-1.5 from Type 10A Nozzle on SDU 5B to Z-451005-SSD-VACB-505 SSD508-P224-1.5 from SSD501-P224-2 to Z-451005-SSD-VACB-505	
SDU 3 DRAINWATER COLLECTION SYSTEM	SSD301-P224-2 FROM P-0001 TO MOV-3100 SSD302-P224-2 FROM P-0002 TO MOV-3100 SSD301-P224-2 FROM MOV-3100 TO MOV-5200 Z-451003-SSD-L-0010A Z-451003-SSD-L-0020A Z-451003-SSD-L-0031A Z-451003-SSD-L-0032A Z-451003-SSD-L-0010B Z-451003-SSD-L-0020B Z-451003-SSD-L-0031B	M-M6-Z-00117 C-CH-Z-00019

	Z-451003-SSD-L-0032B	
Salt Solution Receipt Tank System	SSRT01-P117 from V-0050 to V-7580-2 SSRT03-P117 from V-7580-2 to SSRT #1 SSRT02-P117 from SSRT03-P117-4 to SSRT #2 SSRT17-P255 from Spectacle Blind Flange to HCV-7583 SSRT13-P117 from V-0060 to SSRT14-P255 SSRT14-P255 from HCV-7583 to SSRT20-P255 SSRT20-P255 from SSRT14-P255 to SSRT #1 SSRT21-P255 from SSRT14-P255 to SSRT #2 FSW01-P008 from P-0003 to SSRT #1 SSRT42-P117 from SSRT #1 to SSRT08-P117 SSRT04-P117 from SSRT #1 to P-0001 SSRT05-P117 from P-0001 to SSRT08-P117 SSRT07-P117 from V-0076 to V-0096 SSRT06-P117 from SSRT05-P117 to SSRT #1 SSRT12-P117 from V-0065 to V-0085	M-M6-Z-00109

	SSRT45-P117 from SSRT06-P117-2 to V-0248 SSRT24-P117 from SSRT06-P117 to SSRT26-P117 SSRT27-P117 from SSRT26-P117 to SSRT #1 SSRT26-P117 from V-0130 to SSRT28-P117 SSRT28-P117 from SSRT26-P117 to SSRT #2 SSRT25-P117 from SSRT26-P117 to SSRT11-P117 SSRT16-SP202R from SNK-0001 to SSRT #1 Enclosure Sump FSW03-P008 from P-0004 to SSRT #2 SSRT41-P117 from SSRT #2 to V-0056 SSRT09-P117 from SSRT #2 to P-0002 SSRT10-P117 from P-0002 to SSRT08-P117 SSRT11-P117 from SSRT10-P117 to SSRT #2 SSRT46-P117 from SSRT11-P117 to V-0249 SSRT08-P117 from SSRT05-P117 to V-0052 SSRT22-P117 from SSRT04-P117 to V-7512-2 SSRT23-P117 from SSRT09-P117 to V-7532-2	

	SSRT30-SP202R from P-0001 to V-0133 SSRT33-SP202R from P-0002 to V-0153 SSRT44-P117 from SSRT24-P117 to V-0130	
SDU 3A Leak Detection Sump	Leak Detection Sump (including LE-3110)	M-M6-Z-00117
SDU 6 Drainwater Return Lines	L-607-P224-2 from P-0007 to HCV-6118 L-606-P224-2 from P-0006 to HCV-6119 L-604-P224-2 from P-0004 to HCV-6121 L-603-P224-2 from P-0003 to HCV-6123 L-608-P224-2 from P-0008 to HCV-6125 L-605-P224-2 from P-0005 to HCV-6120 L-602-P224-2 from P-0002 to HCV-6122 L-601-P224-2 from P-0001 to HCV-6124 L-622-P224-1 from 2X1 Reducer (High Point) to VB-6001	M-M6-Z-00129
	L-608-P224-2 from HCV-6125 to HCV-6126 L-608-P224-2 from HCV-6125 to VACB-0505	M-M6-Z-00118