DOCUMENT REVIEW/APPROVAL

Document: G-SD-Z-00002 **Revision:** 11

Title: System Design Description for Saltstone Structures and Salt Disposal Units

DOCUMENT REVIEW/APPROVAL

Classification Reviewer: N/A

Date: 2017/08/24

DOCUMENT REVIEW/APPROVAL

Document: G-SD-Z-00002 **Revision:** 11

Title: System Design Description for Saltstone Structures and Salt Disposal Units

Document Type SYD **Functional Classification:** PS

Description: Incorporated changes per G-DCF-Z-00030, G-DCF-Z-00031, U-DCF-Z-00020, G-DCF-Z-00032, U-DCF-Z-00036, and G-DCF-Z-00035. Also updated to reflect J-DCP-Z-13001, J-DCP-Z-13003, and M-DCF-Z-00479 modifications.

Amendments Incorporated:

N/A

References:

G-DCF-Z-00030,G-DCF-Z-00031,U-DCF-Z-00020,G-DCF-Z-00032,U-DCF-Z-00036,G-DCF-Z-00035,J-DCP-Z-13001,J-DCP-Z-13003,M-DCF-Z-00479

Facility Code(s): SS/SALTSTONE,S-ENG

Originator: VALDIVIA, JOCELIN **Date:** 08/09/2017

Reviewers

1. RILEY, PATRICK J	N/A	Approved	08/23/2017

Approvers

1. STAUB, AARON VAUGHN	N/A	Approved	08/24/2017

VERIFIER/CHECKER

Verifier/Checker: RILEY, PATRICK J **Date:** 08/23/2017

Verification/Check Methods Document Review

DESIGN AUTHORITY

Design Authority: RILEY, PATRICK J **USQS Required:** Yes

Date: 08/24/2017 **TRP Number:** TRP-SS-2017-00153

SALTSTONE FACILITY
SYSTEM DESIGN DESCRIPTION (U)
SALTSTONE STRUCTURES AND SALT DISPOSAL UNITS (SDU)'s

Original Document (SS-02) by
Bechtel National, Inc.

Revision Number	**11**
Revision Date	**08/07/17**

Savannah River Remediation, LLC
Savannah River Site
Aiken, South Carolina 29808

Change Control Record

Facility Name	*SDD Unique Identifier*
Saltstone Facility (SSF)	G-SD-Z-00002

Technical Agency Approval

Signature *N/A* *Date:*

Design Authority Approval

Signature *Approvals Maintained in DCR/EDWS* *Date:*

Summary of Changes

Revision No. and Date	*DCF/DCN Number*	*Pages Affected by the change*	*DCF/DCN Incorporation Verification*
Rev. 0, 6/16/93	N/A	Transmitted to WSRC	N/A
Rev. 1, 4/12/95	N/A	Reviewed/Revised by WSRC for Issue	N/A
Rev. 2, 6/5/01	Reviewed/Revised for Re-start, G-DCF-Z-00002 & 00005 LCS Modifications	Revision bars identify changes due to incorporation of listed change documents.	N/A
Rev. 3, 9/15/03	Incorporated G-DCF-Z-00012 & LCS Modifications	Revision bars identify changes due to incorporation of listed change documents.	N/A
Rev. 4, 9/28/05	Incorporated M-DCP-Z-05003 Added SS Components per DSA Rev 3	Revision bars identify changes due to incorporation of listed change documents.	N/A
Rev. 5, 4/2010	Incorporated E-DCF-Z-00179, E-DCF-Z-00216, G-DCF-Z-00-18, M-DCP-Z-05011-M003, U-DCF-Z-00003	Revision bars not used	N/A
Rev. 6, 8/4/10	Reviewed/Revised for DSA/TSR Revisions 7 to reflect Organic Modifications J-DCP-Z-06005, M-DCP-Z-06006, M-DCP-Z-07002	Revision bars identify changes due to document review/revision	N/A
Rev. 7,	Incorporated G-DCF-Z-00019	Revision bars identify changes due to document review/revision	N/A
Rev. 8	Incorporated E-DCF-Z-00266, J-DCF-Z-00457. Added Salt Disposal Unit (SDU) #2 System Description. Changed all instances of "Vault" to "SDU." Referenced C-TRT-Z-0001, SDU 2 Performance testing.	Revision bars not used	N/A

Rev. 9	Reviewed/Revised for DSA/TSR Revisions 10 to reflect SDU 3 & 5 Projects per J-DCP-Z-10001, J-DCP-Z-10002; Incorporated G-DCF-Z-00025, G-DCF-Z-00026, G-DCF-Z-00027.	Revision bars not used	N/A
Rev. 10	Incorporated WSRC-IM-00028 "SDU 3 and 5 Portable Ventilation System"	Revision bars identify changes due to incorporation of listed change documents.	N/A
Rev. 11, 08/2017	Incorporated: G-DCF-Z-00030 G-DCF-Z-00031 U-DCF-Z-00020 G-DCF-Z-00032 U-DCF-Z-00036 G-DCF-Z-00035 Updated to reflect J-DCP-Z-13001, J-DCP-Z-13003, and M-DCF-Z-00479 modifications	Revision bars not used	N/A

TABLE OF CONTENTS

Section	Title	Page
1.0	**FUNCTIONS AND DESIGN REQUIREMENTS**	**2**
1.1	**PROCESS AND SAFETY SYSTEM FUNCTIONS**	**3**
1.1.1	Safety Class (SC) Functions	3
1.1.2	Safety Significant (SS) Functions	3
1.1.3	Production Support (PS) Functions	3
1.1.4	General Service (GS) Functions	4
1.2	**DESIGN REQUIREMENTS**	**4**
1.2.1	Operational Requirements	4
1.2.2	Structural Requirements	7
1.2.3	System Configuration and Essential Features	7
1.2.4	Maintenance Requirements	7
1.2.5	Surveillance and In-Service Inspection Requirements Per Revision 10 of the DSA, the Surveillances are as follows:	8
1.2.6	Power, Instrumentation and Control Requirements	9
1.2.7	System Interfacing Requirements	8
1.2.8	Quality Assurance Requirements	10
1.2.9	Code and Standard Requirements	10
1.2.10	Reliability Assurance	11
1.2.11	Availability Requirements	12
1.2.12	Human Factors Requirements	12
1.2.13	Plant and System Transients Requirements	12
1.2.14	Equipment Qualification Requirements	12
1.2.15	Other Issues Resulting in Requirements	12
1.2.16	Performance Assessment Requirements	13
1.3	**DESIGN BASIS RATIONALE**	**13**
1.3.1	Vault 4 Temperature Monitoring System	13

2.0 DESIGN DESCRIPTION 14

2.1 DETAILED SYSTEM DESCRIPTION 14

2.1.1 Process Building (210-Z) 14
2.1.2 Operations Building (704-Z) 15
2.1.3 Substation Building (951-Z) 16
2.1.4 Fire Water Pump House (901-Z) 16
2.1.5 Railcar Unloading Structure (205-7Z) 17
2.1.6 Unloading Control Office (205-8Z) 17
2.1.7 Support Structure for Silos and Blending System 17
2.1.8 Outdoor Tank Foundations 17
2.1.9 Foundation and Enclosure for Clean Cap Batch Tank and, Salt Feed Tank, and the Salst Solution Receipt Tanks. 18
2.1.10 Vaults 1 and 4 18
2.1.11 Vault 4 Temperature Monitoring System 21

2.2 SYSTEM PARAMETERS AND CHARACTERISTICS 22

2.3 SYSTEM ARRANGEMENT 23

2.4 COMPONENT DESIGN DESCRIPTIONS 24

2.5 INSTRUMENTATION AND CONTROL 25

2.6 SYSTEM INTERFACES 26

3.0 OPERATION 28

3.1 PRINCIPLES OF OPERATION 28

3.1.1 Operating Design Basis 28
3.1.2 Control Basis 28
3.1.3 Operating Points 28
3.1.4 Operator Functions and Operating Locations 28
3.1.5 Administrative Aspects 29

3.2 INITIAL CONFIGURATION 29

3.3 STARTUP 29

3.4 NORMAL OPERATION 29

3.5 SHUTDOWN 29

3.6 INFREQUENT OPERATION 29

4.0 SETPOINTS, SYSTEM LIMITATIONS, AND PRECAUTIONS 29

4.1 SYSTEM LIMITATIONS AND PRECAUTIONS 29

4.2 SETPOINTS 30

5.0 SETPOINTS, SYSTEM LIMITATIONS, AND PRECAUTIONS 47

5.1 UPSET EVENTS 47

5.2 DESIGN FEATURES TO MITIGATE EFFECTS OF UPSET EVENTS 47

6.0 MAINTENANCE 47

6.1 SURVEILLANCE 47

7.0 APPENDICES 53

APPENDIX A REFERENCES 53

APPENDIX B BASES FOR SAFETY FUNCTIONS AND DESIGN REQUIREMENTS 54

APPENDIX C INTERFACE REQUIREMENTS (TMS) 55

APPENDIX D INSTRUMENTATION AND CONTROL CHANNEL LIST 55

APPENDIX E DRAWINGS 56

APPENDIX F VALVE LIST 76

APPENDIX G EQUIPMENT LIST 76

APPENDIX H SYSTEM POSITION PAPERS/DESIGN REPORTS 76

APPENDIX I TRACEABLILITY MATRIX 76

APPENDIX J SDD DOCUMENT CROSS REFERENCE 77

APPENDIX K SAFETY EQUIPMENT LIST 78

APPENDIX L ACRONYM LIST 80

LIST OF ILLUSTRATIONS

Figure	Title	Page
1	Site Plan	48
2	Operations Area Plan	49
3	SDU Trains A/B Temperature Monitoring System	50
4	Typical SDU Train Thermocouple Tree	51
5	SDU Train C Temperature Monitoring System	52

LIST OF TABLES

Table No.	Title	Page
2.2.1-1	TMS PERFORMANCE Characteristics under Normal Operating Conditions....	22
2.5.1-1a	SDU TMS Instrumentation & Control Parameters……...	25
2.5.1-1b	SDU 2, 3, 4, & 5 Train C TMS Instrumentation & Control Parameters……..	25
2.6.1-1	Saltstone Structures and SDU's Primary Interface……	26
2.6.1-2	Saltstone Structures and SDU's Secondary Interface……...	27
4.2.1-1a	SDU TMS Major Instruments Trains A and B ……	30
4.2.1-1b	SDU TMS Major Instruments Train C ……	40
4.2.1-2	SDU TMS Trains A/B (Instrument) Software Tags…….....	42
4.2.1-3	SDU TMS Trains A/B PLC Output Software Tags ……..……	45

SUMMARY

The Saltstone Facility, in Z-Area, is permitted as two separate facilities: the Saltstone Production Facility (SPF), which produces saltstone grout; and the Saltstone Disposal Facility (SDF), which consists of Saltstone Disposal Units (SDUs) used for disposal of the saltstone grout. The Saltstone Facility is part of the Liquid Waste organization (LW). The Saltstone Facility is actually one portion of an integrated waste management and disposal system located at the SRS. This integrated system is designed to treat HLW that was generated and stored at the SRS, and then convert the waste into solid waste forms suitable for final disposal. The Saltstone Facility is a critical part of this system because it is used to treat and dispose of low-activity mixed liquid waste generated by other waste treatment facilities that are also part of the integrated system**.** The Saltstone Facility, in Z-Area, processes and disposes of radioactive salt solution from the H-Area tank farm. The salt solution consists of low-level mixed waste primarily from the Effluent Treatment Project, Low Curie Salt, Actinide Removal Project and the future Salt Waste Processing Facility. The Z-Area Saltstone Facility immobilizes the radioactive solution into a concrete-like product (saltstone) suitable for safe disposal in aboveground salt disposal units (SDU's). Historically, these disposal units (SDU's 1 and 4) have been referred to as "Vaults;" however, because the term Vault has a significant meaning to the South Carolina Department of Health and Environmental Control (SCDHEC) and since it is not a desirable term to SCDHEC for the operations at the Z-area Saltstone Facility, an effort is being made to change the nomenclature from Vaults to Salt Disposal Units (SDU)'s. Should the term "Vault" appear in the body of this document, in the attachments to this document and/or in references used by this document, the term's intended meaning is one and the same as Salt Disposal Unit (SDU). This System Design Description (SDD) describes the design requirements and detailed description of the Saltstone Facility structures and SDU's required for processing salt solution and permanent disposal of saltstone grout.

This SDD also includes the SDU 2, 3, 4, & 5 process systems which supports the disposal of saltstone grout. These process systems are listed below:

- Saltstone Disposal
- SDU 2, 3, 4, & 5 Temperature Monitoring System
- SDU 2, 3, 4, & 5 Portable Ventilation System
- SDU Cell Flammability Monitoring System

For the SDU 6 Structures and Process Systems SDD, see G-SD-Z-00009.

The Temperature Monitoring System for SDU4 cells B, D, E, F, H, J, K & L and SDU2 Cells 2A & 2B includes two independent trains (i.e., Trains A & B) for each cell with grout temperature indications. SDU 2 & 4 TMS also includes a Train C loop with grout temperature indications. SDU 3 & 5 TMS has one thermocouple tree installed per cell with an installed unconnected spare thermocouple tree. SDU 3 & 5 TMS also provides temperature indications.

The overall functional classification for the SDU Temperature Monitoring System is Production Support based on Revision 10 of the DSA. Diagram of the SDU Trains A/B Temperature Monitoring Systems is shown on Figure~~s~~ 3 ("SDU Trains A/B Temperature Monitoring System"). Figure 4 shows a typical SDU Train Thermocouple Tree.

1.0 FUNCTIONS AND DESIGN REQUIREMENTS

This SDD describes the functions and design requirements of the following buildings, support structures, SDU's and SDU 2, 3, 4, & 5 process systems:

- Process Building (210-Z)
- Operations Building (704-Z)
- Substation Building (951-Z)
- Fire Water Pump House (901-Z)
- Railcar Unloading Structure (205-7Z) (abandoned-in-place)
- Support Structure for Silos and Blending System
- Support Structure for Premix Feeding System
- Unloading Control Office (205-8Z)
- Foundations for the Domestic Water Tank (abandoned-in-place), Process Water Tank, Fire Water Tank, Admixture Feed Tank (abandoned-in-place), and Diesel Fuel Tank
- Foundations and Enclosures for the Clean Cap Batch Tank (formerly Salt Solution Hold Tank "SSHT"), the Salt Feed Tank (SFT) (formerly the Flush Water Receipt Tank, 201-Z), and Salt Solution Receipt Tanks.
- Foundation for the Diesel Generator
- SDU 1 (451-1Z), SDU 2 (451-2Z), SDU 3 (451-3Z), SDU 4 (451-4Z), and SDU 5 (451-5Z) including roof
- SDU 2, 3, 4, & 5 Temperature Monitoring System
- SDU 2, 3, 4, & 5 Portable Ventilation System
- SDU 4 Cell Flammability Monitoring System
- SDU CCTV System

Note: The functions and design requirements of other site facilities, such as fences, gates, roads, railroads, parking, sanitary sewer system, storm water system, site grading, etc., are described in G-SD-Z-00001.

1.1 PROCESS AND SAFETY SYSTEM FUNCTIONS

The following functions are required of the Saltstone Disposal Systems. Appendix K identifies the safety equipment supporting each safety function.

1.1.1 Safety Class (SC) Functions

NONE

1.1.2 Safety Significant (SS) Functions

1.1.2.1 SDU Cell Vents

Per Revision 10 of the DSA, the Safety Function for the Passive Vents is as shown below:

The SDU 2, 3, 4, & 5 cell vents provide a flow path between the SDU vapor space and atmosphere. The vents aid in minimizing the potential for reaching Composite Lower Flammability Limit (CLFL) conditions inside the SDU by allowing air displaced by the grout being poured to exit the cell and allowing passive breathing of the cell. For the cells requiring forced ventilation, the passive vents also provide the primary path for the air that is used to purge the cell vapor space.

Each of the Cells B, D, E, F, H, J, K, and L in SDU 4 contains two passive vents on top of the cell. Cells A and B in SDU 2/3/5 contain three passive vents on top of the cell. These vents consist of a short section of 12-inch diameter pipe that penetrates through the roof of the cell at opposite corners of the cell for SDU 4 cells and are evenly spaced across the roof for SDUs 2, 3, and 5 cells. Each vent includes a filter housing that is placed on a flange on the pipe approximately one foot above the roof. A filter assembly (i.e., prefilter and/or HEPA filter) may be installed in the vent housing for radiological control purposes. The cell vents and the 12- inch diameter pipe that penetrates through the roof are classified as SS and the filters as PS. The pipe and filter housing are covered by a rain cap. The rain cap does not have a safety function, but it shall not block the flow path between the cell vapor space and atmosphere.

The passive vent inspection and filter change out will be managed by the Structural Integrity Program.

1.1.3 Production Support (PS) Functions

1.1.3.1 SDU Temperature Monitoring System (TMS)

The functional classification for the SDU 2, 3, 4, and 5 Temperature Monitoring System is Production Support based on Revision 10 of the DSA. The Production Support function of the SDU Temperature Monitoring System provides grout temperature indication. Its only function is to monitor the saltstone monolith.

1.1.3.2 SDU 2, 3, 4, & 5 Portable Ventilation System

The Production Support function of the SDU 2, 3, 4, & 5 Portable Ventilation Systems allows operations to connect a portable ventilation system to the SDUs to ventilate the cell vapor space, when needed.

1.1.3.3 SDU4 Cell Flammability Monitoring System

The functional classification of the SDU4 Cells B and H Flammability Monitoring System is Production Support. Per revision 13 of the DSA, SDU 4 no longer receives grout and the system is no longer required. The SDU4 Cells B and H Flammability Monitoring System has been placed Out of Commission (OOC) and no longer allows operations to monitor for organic Isopar® L and other potentially flammable gases.

1.1.3.4 SDU CCTV System

The Production Support function of the SDU CCTV is to monitor the level of grout in the SDU cells during the grout transfer and filling operations. The SDU CCTV System also supports pig launch operations and provides visual indication of proper system alignment which ensures that grout is being poured in the proper cell.

1.1.4 General Service (GS) Functions

1.1.4.1 The SDU System has no General Service functions.

1.2 DESIGN REQUIREMENTS

The major design requirements for Saltstone structures, SDU's and Saltstone Disposal Systems listed in Section 1.0 are presented in this section. The bases for the Saltstone Disposal Systems are provided in Appendix B.

The structures, SDU's and systems listed in Section 1.0 shall meet the design requirements listed below.

1.2.1 Operational Requirements

1.2.1.1 Process Building (210-Z)

The Process Building (210-Z) shall be a single-story concrete building with smooth interior surfaces for ease of decontamination. The building shall include a regulated area to house the process equipment. A monitor station shall be provided at the exit to the regulated process area for personnel monitoring.

1.2.1.2 Operations Building (704-Z)

The Operations Building (704-Z) shall be a single-story structure that houses change room facilities, offices, radiological control count room and office, and a product test lab, as described below. All areas shall be comfort-conditioned year-round.

Change rooms shall have clean and regulated areas for both men and women. Based on the plant population, 30 lockers for men and 9 lockers for women shall be installed. Space for laundry bags for used clothing and overshoes shall be provided in the regulated areas of the change room. There shall be additional space for storage of several bags of both clean and used clothing.

The building layout shall permit normal movement of personnel between regulated and clean areas through the regulated locker room. Space shall be set aside for contaminated clothing hampers and personnel monitoring instruments at transfer points between regulated and clean zones. The used clothes storage area shall be located to allow dirty clothes to be removed from the loading dock without passing through the clean areas of the building.

A Radiological Control Operation (RCO) area shall be provided close to the change rooms and the main entrance to the Saltstone Processing Area Complex. This area is required for monitoring of both employee and public exposure to radiation, airborne contamination, and radioactive releases using monitoring systems that reflect current technology. The RCO area shall include the following:

- A regulated data processing area with counter space for two beta-gamma counters, two alpha counters, and associated office equipment
- A regulated instrument decontamination/storage room equipped with a HEPA-filtered hood containing a sink and water supply draining to the SFT
- A personnel decontamination room equipped with sink and shower draining to the SFT
- Electrical outlets in all regulated RCO facilities for laboratory counting instruments and equipment requiring electric power
- Floor space for two hand and foot monitors

The product test lab shall have space for installation of a regulated hood, counter tops, a safety shower, eyewash, and a regulated sink, which drains to the SFT.

1.2.1.3 Saltstone Disposal Units (SDU)'s

The SDU's shall be designed to meet the following requirements:

- Leaching and migration of chemicals and radionuclides from the saltstone shall be limited so that concentration of chemical contaminants in groundwater at the landfill boundary will comply with the National Primary Drinking Water Standards.
- The total SDU capacity shall accommodate solidification and disposal of, at a minimum, approximately 15 million gallons of decontaminated salt solution and F/H Effluent Treatment Facility concentrate.
- The design shall accommodate eventual backfilling and covering with clay and soil.
- The bottom of the saltstone waste material shall be at least 2 feet above the seasonal high water table.

- The covers for the SDU's shall be designed to withstand winds up to 80 miles per hour (mph) and a snow load of 5 pounds per square foot (psf). They shall also be designed to prevent entry of rainwater, which could dilute and alter the composition of the saltstone being pumped into the SDU.
- After the SDU's are covered, markers shall be installed to demarcate the site. The markers shall be made of relatively permanent material (e.g., brass or stainless steel) and shall clearly identify the date the landfill was started, the date it was completed, and the type of material disposed of. A map (or maps) shall be prepared giving the landfill boundary coordinates.
- The final grade surface shall be graded so that it slopes gently toward natural streams and shall be seeded to prevent erosion.
- Blast furnace slag shall be incorporated in the concrete to be used in SDU construction (Slag is found to impart desirable physical properties and to chemically reduce both Tc and Cr to insoluble forms and thus slow down their leach rates.)

- SDU 4 designated cells shall include a water drainage system. This enhancement will minimize cracking of exterior SDU walls by alleviating buildup of hydrostatic head in gap between saltstone monolith and wall surface.
- SDU 2, 3, and 5 provide a drainwater collection system that provides for the removal of drainwater from the interior of the disposal unit. C-TRT-Z-00001, SDU2 Performance Testing, provides a water tightness basis for SDU 2. The SDU 2 drainwater fill height is limited to 12 feet for conservatism and as a condition that contributes to the NFPA69 compliance for the drainwater system.
- Designated SDU cells will have passive-flow air vents. This will provide a flow path between the SDU cell vapor space and atmosphere to aid in minimizing the potential for reaching CLFL conditions inside the SDU's.

1.2.1.4 SDU 2 and 4 Temperature Monitoring System

The SDU Temperature Monitoring System shall be designed to meet the following operational requirements:

- Provide two independent trains (A&B) for monitoring grout temperature in SDU.
- Redundant thermocouple tree shall be installed in each SDU Cell capable of providing 210-Z Central Control Room indication at 1 foot grout intervals to the design fill height of the individual SDU cell.
- Provide interface with the DCS for viewing of grout temperature indications in the cells using thermocouple trees and associated temperature transmitters.

1.2.1.5 SDU 3 & 5 Train C Temperature Monitoring System

The SDU Temperature Monitoring System shall be designed to meet the following operational requirements:

- Thermocouple tree shall be installed in each SDU Cell capable of providing 210-Z Central Control Room indication at 1 foot grout intervals to the design fill height of the individual SDU cell.
- Provide interface with the DCS for viewing of grout temperature indications in the cells using thermocouple trees and associated temperature transmitters.

1.2.2 Structural Requirements

1.2.2.1 Buildings, Support Structures, and SDUs

The foundation and superstructure for the buildings, support structures, and SDU's shall be designed to meet the structural requirements specified in the codes and standards listed in Section 1.2.9.1. All buildings shall be classified as standard construction.

1.2.2.2 Saltstone Disposal Process Systems

Structural requirements for the Saltstone Disposal Process Systems equipment (e.g., mounting hardware for raceway, supports, enclosures, in addition to required welds and bolted connections) shall be designed to meet requirements specified in the codes and standards listed in Section 1.2.9.2.

1.2.3 System Configuration and Essential Features

1.2.3.1 Buildings, Support Structures, and SDU's

There are no system configuration and essential features except that the layout and design of the facilities shall ensure a safe environment for personnel.

1.2.3.2 Saltstone Disposal Process Systems

The configuration of the SDU 2 & 4 Temperature Monitoring System includes two independent trains (i.e., designated as Train A & B) for each cell with monitoring capabilities in the 210-Z Central Control Room (CCR). SDU 2, 3, 4, and 5 Train C TMS includes Foundation Fieldbus communications to monitor grout temperature at the DCS.

1.2.4 Maintenance Requirements

1.2.4.1 Buildings, Support Structures, and SDUs

The Saltstone site buildings, support structures, and SDU's shall be designed with the expectation that typical SRS maintenance practices (or those of an equivalent commercial industrial facility) will be applied during the life of the facility. No special or unique maintenance requirements are identified as a basis for the design described in this SDD.

1.2.4.2 Saltstone Disposal Process Systems

The Preventive Maintenance Program shall be established and implemented to ensure that effective measures are taken so that the Saltstone Disposal Process Systems SSC's are capable of performing their intended functions.

Expected maintenance activities include the following items:

- Preventive Maintenance
- Corrective Maintenance
- Investigation of operational problems
- Inspections
- Repairs
- Equipment Replacement

All components of the TMS, with the exception of the thermocouples are readily accessible for maintenance. Thermocouples become embedded in the grout as the cell is filled. Redundant Train A/B thermocouple trees and associated controls should provide adequate flexibility in maintaining the Temperature Monitoring System.

1.2.5 Surveillance and In-Service Inspection Requirements per the DSA, the Surveillances are as follows:

1.2.5.1 Saltstone Disposal Process Systems

Saltstone Facility Technical Safety Requirements (TSR) for SDU Flammability Control includes LCO "U-ESS-Z-00002 – SDU 3 Cell Fill Height (SAC)" and LCO "3.1.3 – SDU 2, 5 Cell Fill Height (SAC)". Surveillance Requirements for both LCO's verify maximum grout height in a cell being poured into is less than or equal to the specific values in specified in TSR tables or U-ESS-Z-00002 while operating in Mode 1. The frequency of these surveillance requirements are as follows:

1) Prior to initiation of Grout pouring, and
2) Once per 12 Hours while Grout is continuously poured, and
3) Within 12 Hours after Grout pouring stopped.

1.2.6 Power, Instrumentation and Control Requirements

1.2.6.1 Saltstone Disposal Process Systems

1.2.6.1.1 Power Requirements

120 VAC & 480 VAC shall be available to support the SSD System controls, panels, and pumps/motors.

1.2.6.1.2 Instrumentation and Control Requirements

The 210-Z Distributed Control (DCS) System and local start/stop stations shall control and monitor the SSD operations. Alarms and interlocks shall ensure proper operation and prevent equipment damage or unsafe operation.

To the extent possible, sensors, electronic components, and similar devices shall be located where they can be readily maintained, calibrated, and/or replaced. Instruments and controls shall be installed outside of regulated areas, when feasible.

1.2.7 System Interfacing Requirements

1.2.7.1 Saltstone Structures and SDU's

The Saltstone Buildings, Support Structures and SDU's interfacing system requirements are listed below:

- G-SD-Z-00001, Z-Area Site, provides the space, access, and security required for the buildings, support structures, and SDU's.
- G-SD-Z-00003, Saltstone Process, requires building enclosures and support structures for the process equipment.
- G-SD-Z-00004, Saltstone Electrical, requires building enclosures and foundations for electrical equipment, and provides lightning and grounding protection, and lighting and communication systems required for the buildings.
- G-SD-Z-00005, Saltstone HVAC, requires space and support for the HVAC equipment and describes the comfort condition and pressure requirements in buildings.
- G-SD-Z-00006, Saltstone Support, requires foundations for supporting outdoor tanks and equipment. Space and support for indoor piping and equipment support are also required.
- G-SD-Z-00007, Saltstone Product Laboratory, requires space for laboratory equipment and drainage system for draining regulated water from the sink.
- G-SD-Z-00008, Saltstone Fire Protection, requires a Fire Water Pump House for housing the electrical and diesel pumps.
- G-SD-Z-00009, SDU 6 Structures and Process Systems, requires drainwater drain-back to SDUs 3 and/or 5.

1.2.7.2 SDU Temperature Monitoring System

The SDU Temperature Monitoring System has interface requirements are listed below:

(Note: Appendix C provides a system matrix for SDU Temperature Monitoring System interfacing systems.)

- G-SD-Z-00001, Z-Area Site, provides the space and access to the equipment.
- G-SD-Z-00004, Saltstone Electrical, provides power, grounding, lighting systems, and communications.
- G-SD-Z-00005, Saltstone HVAC, provides suitable indoor conditions for electrical equipment operations.
- G-SD-Z-00006, Saltstone Support, provides utilities and Distributed Control System.
- G-SD-Z-00008, Saltstone Fire Protection, provides fire protection for 210-Z electrical equipment.

1.2.8 Quality Assurance Requirements

1.2.8.1 Saltstone Building, Support Structures and SDU's

Quality assurance requirements for SRS activities are outlined in DOE Standard 3009-94. The Saltstone Facility follows the requirements of 1Q "Quality Assurance Manual" and the QA program requirements set forth in Manual 1B "Management Requirements and Procedures."

1.2.8.2 SDU Temperature Monitoring System

Standard quality assurance program as it relates to this system shall perform the following:

- Support independent assessment, verification, and inspection requirements to ensure compliance with Manual 1Q "1Qauality Assurance Manual."
- Software Quality Assurance Plan B-SQP-Z-00002

1.2.9 Code and Standard Requirements

1.2.9.1 Saltstone Buildings, Support Structures and SDU's

The building, support structures, and SDU's shall be designed to meet the applicable sections of the following codes and standards:

Southern Building Code Congress International Inc., "Standard Building Code"

International Conference of Building Officials, "Uniform Building Code" (UBC)

American Institute of Steel Construction (AISC), "AISC Manual of Steel Construction"

American Welding Society (AWS)

- "Structural Welding Code, Steel," AWS D1.1-81
- "Structural Welding Code, Reinforcing Steel," AWS D1.4-79

American Concrete Institute (ACI)

- "Building Code Requirements for Reinforced Concrete," ACI 318-77 (1980) with Commentary
- "Concrete Sanitary Engineering Structures," ACI 350R-77 (Chapter 2, Section 2.6, for crack control provision only)

Occupational Safety and Health Administration (OSHA), Department of Labor, "Occupational Safety and Health Act of 1970," Title 29-Labor, Parts 15 and 19

Structural Specification for Building Code Requirements, Site Specification No. 7096, Revision 2, E. I. du Pont de Nemours and Co., Inc. - For the Saltstone Facility. (This specification is superseded by Engineering Requirements, "Structural Design Criteria," No. 01060-02-R, issued on July 31, 1992.)

Residual Salt Disposal Facility - DWPF, Z-Area, Savannah River Plant, Soil Investigation Report, by Mueser-Rutledge, Consulting Engineers, April 22, 1985

American National Standards Institute, Inc. (ANSI) A58.1, "Minimum Design Loads for Buildings and Other Structures"

1.2.9.2 Saltstone Disposal Process Systems

Saltstone Disposal Process Systems shall be designed to meet the applicable sections of the following codes and standards:

- National Electrical Manufacturers Association (NEMA)
- National Electrical Code (NEC)
- C-CI-G-0039 "Electrical Cookbook"
- C-CI-Z-00680 "Electrical Raceway Supports & Details, Standard Cable Tray Supports"
- SRS Engineering Practices Manual WSRC-IM-95-58
- IEEE Standard 384-1992
- American Society for Testing and Materials (ASTM)
- SRS Engineering Standards Manual WSRC-TM-95-1
- ANSI C2

1.2.10 Reliability Assurance

1.2.10.1 Saltstone Disposal Process Systems

There are no special reliability assurance requirements for this system.

1.2.11 Availability Requirements

1.2.11.1 Saltstone Disposal Process Systems

The Saltstone Disposal Process Systems are required to be available and operable when processing in Mode 1.

1.2.12 Human Factors Requirements

1.2.12.1 Saltstone Disposal Process Systems

The human actions associated with the Saltstone Disposal Process Systems include monitoring SSCs to ensure safe operations of the Saltstone Disposal Facility, responding to alarms or out-of-limit process parameters, and placing the facility in a safe condition prior to or after an abnormal condition. The grout height indicators, together with the CCTV System are utilized during the production of grout. When the grout reaches the Grout Height Fill Limit, the salt solution and dry premix feeds to the SDU are shutdown.

For SDU 4 clean capping operation from external source, the actions required to be performed by 5.6.2.2 SDU 4 Cell Fill Height Specific Administrative Control (SAC) include connecting the clean cap grout line to the proper cell and ensuring the allowable volume to be poured (i.e., number of mixer truckloads) is not exceeded. These actions require independent verification.

1.2.13 Plant and System Transients Requirements

1.2.13.1 Saltstone Disposal Process Systems

The SDU 2 & 4 Temperature Monitoring System was designed to detect high grout temperature and initiate interlock to stop salt solutions and dry premix feeds to the mixer. In the event of a system failure, the temperature monitoring system was designed to fail in a safe mode of operations. However, in 2013, DSA Revision 10 downgraded the TMS from Safety Significant (SS) to Process Support (PS) and the SDU 2 and 4 High Temperature interlock was removed. Its only function is to monitor the temperature of the saltstone monolith.

1.2.14 Equipment Qualification Requirements

1.2.14.1 Saltstone Disposal Process Systems

The SDU Temperature Monitoring System was designed as a SIL-1 Safety Instrumented System.

1.2.15 Other Issues Resulting in Requirements

1.2.15.1 Saltstone Disposal Process Systems

The Saltstone Disposal Process Systems do not have other specific issues resulting in requirements.

1.2.16 Performance Assessment Requirements

Performance Assessment requirements are driven by DOE Order 435.1, Radioactive Waste Management. DOE Order 435.1 requires a radiological Performance Assessment (PA) be prepared and maintained for DOE low-level-waste facilities for long term protection of the public and environment. A performance Assessment is a risk assessment tool used to assess the fate and transport of waste materials for the purpose of demonstrating that there is reasonable assurance that performance objectives, established for the long-term protection of the public and the environment, will not be exceeded following closure of the facility. The Saltstone Facility shall comply with SRR-CWDA-2011-00196, "Unreviewed Waste Management Question Requirements Document for Saltstone," SRR-CWDA-2011-00196 provides Saltstone personnel guidance to ensure all proposed activities that may impact the PA are reviewed for compliance with the DOE order.

1.3 DESIGN BASIS RATIONALE

The following information is based on Revision 10 of the DSA:

1.3.1 Saltstone Disposal Process Systems and SDUs

To mitigate a SDU Cell explosion event, the SDU Cell Vents provide the primary path between the cell and the atmosphere. The design features of the cell vents aid in minimizing the potential for reaching CLFL conditions inside an SDU by allowing air displaced by the grout being poured to exit the cell and allowing passive breathing of the cell. If forced ventilation of the cell is required, air from outside the SDU is drawn in through the passive vents replacing the air being withdrawn from the cell vapor space by a portable ventilation system.

2.0 DESIGN DESCRIPTION

The buildings, support structures, and SDU's listed in Section 1.0 are described in detail in this section. These facilities are shown in either Figures 1 or 2.

2.1 DETAILED SYSTEM DESCRIPTION

2.1.1 Process Building (210-Z)

The Process Building (210-Z) consists of a main structure with plan dimensions of 94 by 95 feet and an outdoor area for process vent system, exhaust stack, and instrument shelter.

The main structure consists of a regulated process area, support areas, and feed bin and weigh hopper support structure. The foundation system for the main structure consists of spread footings and grade beams, as shown in Drawings W780551, W780552, and W780553. The ground floor slab ranges in thickness from 6 to 12 inches, as shown in Drawings W780556, W78557, and W780558. The floors are designed for a live load of 200 psf, and the process area and maintenance shop floors are also designed for a loaded flatbed truck trailer.

The regulated process area is 35 by 62 feet in plan. It has access air locks, concrete walls, and a concrete roof slab with concrete beam support system. The interior surfaces of the walls have a smooth finish for ease of decontamination. A platform at El. 303.00 supports the mixer, as shown in Drawings W780587 and W780588.

The roof supports the premix feed bin support structure and associated equipment. The premix feed bin support structure is a braced steel frame structure with plan dimensions of 28 by 20 feet and a height of 45 feet above the process area roof, as shown in Drawing W780572. The roof of the regulated process area also supports the process area supply air blowers and air handling units, as shown in Drawing W780561. There are two eyewash and safety shower stations in the regulated process area.

The support areas in the process building are enclosed by a one-story steel frame structure with concrete masonry unit (CMU) walls, insulated metal siding, and built-up roofing. These areas encompass the clean maintenance shop, utilities room, electrical control room, battery room with eyewash, E&I shop, operations control room, offices, and storage areas. The roof over these areas supports the maintenance shop packaged air conditioning unit and the ICR/E&I shop/offices air conditioning unit, including associated access/maintenance platforms. The roof also supports the ECR/utilities room air handling unit, the closed-loop cooling package, the ECR/UTIL room return exhaust fan, the maintenance shop return/exhaust fan, and the welding fume exhaust fan. The layout of the building is shown in Drawing W780400.

All areas of the building are comfort-conditioned by an HVAC system, described in G-SD-Z-00005. A foundation for supporting the exhaust stack is provided, as shown in Drawing W780598.

A 5-ton underhung crane serves the regulated process area. The entire open side of the room (west side) is accessible to this crane. Loads may be transferred to the outside by means of an extension spur which is continuous with the crane rail at a specific position. The spur continues

outdoors through the double door in the east wall. Details regarding the cranes and support beams are given in Drawings W775900 and W780570.

2.1.2 Operations Building (704-Z)

The Operations Building (704-Z) is a single-story steel frame structure with plan dimensions of 96 by 96 feet. It is located to afford easy access to the Process Building (210-Z), as shown in Figure 2. The foundation system consists of individual spread footings under columns designed for maximum allowable soil bearing pressure of 6,000 psf. The floor slab is 6-inch-thick reinforced concrete slab supported on well-compacted structural backfill. There is a vapor barrier under the entire area of the slab on grade. The details of foundations and floor slab are shown in Drawing W780641. The floor slab is designed for a live load of 100 psf; the roof is designed for a live load of 20 psf. The exterior walls consist of 4-inch-thick brick veneer on ½-inch-thick gypsum sheathing with the vapor barrier between the two. The interior walls consist of gypsum board on metal studs. All walls are insulated to meet the energy conservation requirement. The walls of the electrical and control room are designed as 2-hour fire-rated walls. Details of the wall sections are shown in Drawings W780431 and W780434.

The interior of the building, which includes the facilities described below, is shown in Drawing W780431.

2.1.2.1 Change Rooms

Change rooms equipped with lockers and showers are provided with clean and regulated areas for both men and women. Space is set aside in the regulated areas of the change rooms for laundry bags for used clothing and overshoes. Additional space is made available for storage of several bags of clean and used clothing. The layout of the rooms allows normal movement of personnel between regulated and clean areas through the regulated locker room. Space is provided for contaminated clothing hampers and personnel monitoring instruments at transfer points between regulated and clean zones. The used clothes storage area is located to allow dirty clothes to be removed from the loading dock without passing through the clean areas of the building.

2.1.2.2 Radiological Control Operation Count Room and Office

An RCO area is provided close to the change rooms and the main entrance to the Saltstone Processing Area Complex. This area is provided for monitoring of both employee and public exposure to radiation, airborne contamination, and radioactive releases using monitoring systems that reflect current technology. The RCO area includes the following:

- A controlled office area providing "clean" workspace for technicians and supervisors.
- A regulated counting room equipped with a HEPA-filtered hood containing a sink and water supply draining to the SFT
- A personnel decontamination room equipped with sink, eyewash, and shower draining to the SFT

- Sufficient electrical outlets in all regulated RCO facilities for laboratory counting instruments and equipment requiring electric power
- Floor space at the Radiological Buffer Area exit for two hand and foot monitors

2.1.2.3 Product Test Lab

For a detailed description of product test lab, see G-SD-Z-00007.

2.1.2.4 Other Rooms

In addition to the rooms described above, the building also includes several offices, a lunch room, a utility room, a conference room, a record and reproduction room, a telephone room, an electrical control room, a janitor's room, a rest area, and a shipping and receiving area.

All areas of the building are comfort-conditioned by an HVAC system, described in G-SD-Z-00005.

A separate drain system from the regulated areas drains the water to the SFT. Details of the building drain system are shown in Drawings W780437, W780438, W780439, W780440, W780441, and W780442.

2.1.3 Substation Building (951-Z)

The Substation Building (951-Z) is a single-story building with plan dimensions of 37 by 37 feet. The foundation system consists of a slab on well-compacted structural backfill with a perimeter edge beam to support the walls. The superstructure consists of reinforced CMU walls and an insulated built-up metal deck roof on steel beams. A reinforced concrete slab on grade with an area of 23 by 37 feet is provided on the south side of the building. This slab accommodates the foundation for the Diesel Generator, a pad for the battery enclosure, a pad for an eyewash and safety shower, and a covered trench for the fuel lines from the Diesel Fuel Tank. A concrete slab surrounded by a diked curb and pedestals is provided for the Diesel Fuel Tank. A steel platform affords access to the top of the tank. The support steel for the platform is encased in 4-inch-thick concrete for fire protection. A concrete pad outside the building supports the HVAC air handling units. A 9.5- by 2.5-foot opening in the west wall accommodates an intake louver. Two 7.33- by 2.5-foot openings in the east wall accommodate exhaust louvers. The HVAC system for this building is described in G-SD-Z-00005. Details of this structure are shown in Drawing W780421.

2.1.4 Fire Water Pump House (901-Z)

The Fire Water Pump House (901-Z) is a single-story building located next to the Fire Water Tank with plan dimensions of 25 by 45 feet. The walls and columns are supported by a reinforced concrete foundation beam, 1 foot 6 inches wide by 3 feet deep. The floor is a 6-inch-thick reinforced concrete slab supported on well-compacted structural backfill. The superstructure consists of prefabricated steel with insulated metal siding and roofing. The building is divided into two rooms, one for the electric pump and the other for the diesel-engine-driven pump and the Diesel Fuel Oil Tank. A 2-foot by 2-foot by 2-1/2-foot deep sump is located in the center of each pump room. The walls surrounding the diesel pump room are designed for a 2-hour fire rating. All penetrations through the fire-rated walls are sealed to provide air-tightness

and water-tightness and to maintain the 2-hour fire rating. There is an 8 in. diameter exhaust pipe in the roof of the diesel pump room. Foundations are also provided for the diesel and electric pumps. Concrete pads support the Diesel Fuel Oil Tank, and a 2-foot high concrete dike around the tank contains the fuel in the event of a fire or tank rupture. The details of this structure are shown in Drawings W780410 and W780770. The HVAC system for this building is described in G-SD-Z-00005.

2.1.5 Railcar Unloading Structure (205-7Z)

The Railcar Unloading Structure (205-7Z) is a steel structure with plan dimensions of 18.5 by 50 feet. It is located on railroad track No. 2. There is a minimum vertical clearance of 23 feet from the top of rail at El. 293.04 to the bottom steel. The walls of the structure are supported on spread footings designed for a maximum allowable soil bearing pressure of 6,000 psf. The superstructure consists of steel framing with metal siding and a metal roof. A retractable steel platform at El. 307.50 affords access to the top of the railcars, as shown in Drawing W780611. The walls and roof are designed for wind loads as per ANSI A58.1. In addition, the roof is designed for a live load of 25 psf. A monorail beam supports a 500-pound hoist. Details of this structure are shown in Drawing W780601. The structure is no longer used and has been abandoned in place pending removal.

2.1.6 Unloading Control Office (205-8Z)

The Unloading Control Office (205-8Z) is located next to the Railcar Unloading Structure (205-7Z). Its plan dimensions are 11 by 17 feet. It is a single-story structure with concrete masonry walls resting on a reinforced concrete floor slab supported on grade. The toilet facility is equipped with a sink, mirror, domestic water heater, and toilet exhaust fan. There is a reflected ceiling with recessed light fixtures and window-type air conditioners. A concrete pad is provided at the northwest corner of the building to support an eyewash and safety shower. Details of this building are shown in Drawing W780425.

2.1.7 Support Structure for Silos and Blending System

The Support Structure for Silos and Blending System provides the foundations and a braced steel frame superstructure to support the cement, slag, and fly ash silos. The foundation system with overall plan dimension of approximately 63 by 66 feet consists of deep reinforced concrete grade beams with piers for columns, supported on well-compacted structural backfill. The foundations are designed for a maximum allowable soil bearing pressure of 6,000 psf. The superstructure is braced steel frame. Platforms at four levels support the equipment and provide working space for operation and maintenance. All structural steel members, including the connection bolts, are galvanized. The superstructure is designed for wind loads as per ANSI A58.1. Foundation pads support the premix air blender, air compressor, air surge tank, and moisture separator. Details of this structure are shown in Drawings W780602, W780603, W780604, W780605, W780606, and W780607. A detailed description of handling of the bulk material is given in G-SD-Z-00003.

2.1.8 Outdoor Tank Foundations

Reinforced concrete foundation pads resting on well-compacted structural backfill support the Domestic Water Tank, Process Water Tank, Admixture Feed Tank, and Fire Water Tank. Details of these foundations are shown in Drawings W780634 and W780770.

2.1.9 Foundation and Enclosure for Clean Cap Batch Tank, SFT, and Salt Solution Receipt Tanks

The foundation for the Clean Cap Batch Tank (CCBT) and the Salt Feed Tank (SFT) consist of reinforced concrete pits constructed partially below finished grade. The pit is designed to contain the tank contents in the event of a tank rupture and to provide the required shielding protection. The finished grade around the tanks is at El. 290.00. The bottom of the pit is at El. 280.50 for the CCBT and El. 272.00 for the SFT. The top of the wall is at El. 298.00 for both tanks. The walls and the slab of the pits are also designed to contain any leaks and/or spillage. A trench and a sump drain and collect all leaks and spillage. The slab and walls of the pit are designed to resist the soil pressure and not to exceed the maximum allowable soil bearing pressure of 6,000 psf under the slab. There is a steel shield plate cover on top of the concrete pits. A structural steel enclosure with insulated metal roof deck is provided over the tanks. The columns of the enclosure structure are supported on concrete piers poured monolithic with the pit walls. All structural steel members, including the connection bolts, are galvanized. The details of the foundation and tank enclosure are shown in Drawings W780591, W780592, W780593, and W780595.

The foundation for the Salt Solution Receipt Tank (SSRT) structure consists of a reinforced concrete foundation constructed on grade. The structure is designed to contain the tank contents in the event of a tank rupture and to provide the required shielding protection. The finished grade around the tanks is at El. 290.00. The top of the concrete structure is at El. 314.17. The top of the roof super structure is at El. 356.17. The walls and the slab of the structure are designed to contain any leaks and or spillage. The cells contain sumps to collect all leaks and spillage. There is a steel shield plate cover on top of the concrete cells. All structural steel members, including the connection bolts, are galvanized. The details of the foundation and tank enclosure are shown in Drawings C-SP-Z-00001, and C-SS-Z-00001.

A concrete slab with raised pads at grade level supports a vent heater, vent blowers, and HEPA filters.

2.1.10 SDU's 1, 2, 3, 4 and 5

SDU 1 is located south of the operations area, as shown in Figure 1. The overall dimension is 100 feet wide by 600 feet long by 27 feet deep. It is divided into two units, each 100 by 300 feet, with a 3-inch separation gap between the units. Each unit is further divided into three cells of 100 by 100 feet. The top of concrete wall is 27 feet above the bottom of slab. The bottom of SDU is at El. 281.50 and is approximately 31.5 feet above the maximum recorded groundwater table at El. 250.00.

Three cells have been filled with grout, clean capped, and a permanent roof sealed with ethylene propylene diene monomer (EPDM) Elastomeric Sheet Roofing (fully adhered) installed. The roof is designed for a live load of 25 psf, and the platforms are designed for a live load of 100 psf. The remaining three cells are empty and available for disposal of failed equipment.

SDU'S are shown on vicinity map C-CG-Z-00021. Using plant north as a reference, SDU 1 is located south of the operations area, SDU 2 is located north-east of the operations area and SDU 4 is located south-east of the operations area. In the original design, SDU 4 was numbered

SDU's 6 and 7 with a common wall between them. The overall dimension is 200 feet wide by 600 feet long by 27 feet deep. It is divided into two units, each 200 by 300 feet, with a 3-inch separation gap between the units. Each unit is further divided into six cells of 100 by 100 feet. The top of the concrete wall is 27 feet above the bottom of slab. The bottom of the SDU is at El. 269.00 and is approximately 19 feet above the maximum recorded groundwater table at El. 250.00.

A permanent roof has been installed on SDU #4, and will be used on all future SDU's. The roof has individual access ports for each SDU cell (with the exception of SDU 4 cell A which holds the Naval Fuels Drums) for CCTV, fill port, vents (2), and future connections for Health Monitoring. The roof is designed for a live load of 25 psf, and the platforms are designed for a live load of 100 psf. Details of the permanent roof may be found in drawings C-CC-Z-0011 through C-CC-Z-0014, C-CS-Z-0001 and 0002, and WB00001K/sheet 4. The SDU 2 roof is designed for a live load of 30 psf, and the details of the roof design maybe found in drawing C-SOW-Z-00001.

For SDU 4 cells B, D, E, F, H, J, K, and L, a Drain Water Collection System has been installed. This system is used for the collection and pumping of excess liquid (drainwater) associated with the pumping of grout to the SDU and consists of a geotextile fabric membrane with an impervious backing that is attached to the SDU walls. This allows free liquid to pass through the fabric where it is captured in the gap between the fabric and the backing. The water drains into a 12 inch PVC pipe system around the base perimeter of each SDU cell and is equipped with instrumentation to monitor level (approx. 2000 gallons capacity). A 2 inch drain line from each SDU cell allows periodic draining of liquid through the SDU cell wall into a common header connected to a drain water pump. From there the drain water is routed to the SFT. The high point of the drainwater line allows draining of the line after making a transfer. Drainwater piping on the SFT side of the high point drains the line to the SFT and drainwater piping on the SDU side of the high point drains back to the drainwater pumps which has the capability of operating in reverse in order to pump line residual back into the respective SDU cell. . Draining of the drainwater line is required, because it is not jacketed, and it is not insulated or equipped with heat tracing. The volume of drainwater transferred is monitored by a flow transmitter located at the SFT. An isometric description of the system design is shown in Drawings P-PI-Z-0004.

SDUs 2, 3 & 5 have a drainwater system similar to SDU 4 except that a submersible pump is utilized to extract the drainwater and pump the drainwater through the roof. No wall penetrations exist for the removal of drainwater from SDUs 2, 3 & 5.

The SDU 2, 3 and 5 cells are designed with the capability to install a portable ventilation system to purge the cell vapor space if needed. The portable ventilation system draws atmospheric air into the cell through roof-mounted passive vents and discharges to atmosphere through a HEPA filter(s). When installed, the exhaust ducts are connected to the SDU cell roof penetrations (4 total) via flex ducting in a manner that uses the roof slope to drain the flex ducts of any condensate back into the SDU cell. The portable ventilation system is powered locally. The system is manually operated with local flow instrumentations and controls. In the event portable

ventilation system is not available, other ventilation equipment of equivalent performance capabilities and associated monitoring instrumentation may be connected to the process.

A flow path from atmosphere into the SDU cell vapor space is provided by roof-mounted passive vents that allow outside air to be drawn into the SDU cell as the portable ventilation unit exhausts the SDU vapor space to atmosphere. SDU 2, 3 and 5 have three (3) passive vents per cell - one (1) at the high point located in the center of the tank roof and two (2) on the low points of the tank roof located on either side of the tank roof. These SDU 2, 3 and 5 passive vents have HEPA filters to prevent the spread of aerosol based contamination.

The passive ventilation system provides a flow path between the SDU cell vapor space and atmosphere. Studies concluded that a HEPA grade filter with forced ventilation was not required. These vents consist of a short section of 12 inch diameter pipe that penetrates through the roof of the SDU at opposite corners of the SDU. Each vent may include a filter housing that is placed on a flange on the pipe approximately one foot above the roof. A filter assembly (i.e., prefilter and/or filter) may be installed in the vent housing for radiological control purposes. The pipe and filter housing are covered by a rain cap. The rain cap does not have a safety function, but it shall not block the flow path between the SDU vapor space and atmosphere.

The SDU 2 cells 2A & 2B and SDU 4 cells B, C, D, E, F, H, I, J, K, and L have 3 trains of thermocouple trees. Its only function is to monitor the temperature of the saltstone monolith. SDU 4 Trains A & B will have up to 27 thermocouples apiece in each installed SDU and SDU 4 cell at intervals of 1 foot to the design grout fill level. SDU 4 Train C will have one thermocouple every 3 feet in each installed SDU cell. SDU 2 has three (3) trains of thermocouples. Trains A & B have twenty-three (23) thermocouples at one (1) ft. intervals beginning at 0.5 feet from the bottom of the tank; while, Train C has twenty-two (22) thermocouples at one (1) foot intervals beginning at 0.5 feet from the bottom of the cell. SDU 3 & 5 has one (1) installed train of thermocouples and one (1) spare unconnected thermocouple tree. SDUs 3 & 5 Train C has twenty-two (22) thermocouples at one (1) foot intervals from the bottom of the cell.

All future SDU's are proposed to be constructed as cylindrical tanks. Some advantages of cylindrical tanks:

- Tank walls are able to withstand the hydrostatic head without sheet drain;
- Grout will have more surface area for heat dissipation than individual cells as in SDU 4.
- These SDU's will have a permanent roof installed during initial construction. This will eliminate the practice utilized in the construction of SDU 1 of using a temporary rolling weather protection cover, installing an interim clean cap, and finally installing a permanent roof.

To minimize leaching and migration of chemicals and radionuclides from the saltstone grout, blast furnace slag was used in the concrete mix for construction of the SDU's. The concrete used in SDU construction has a minimum design compressive strength of 4,000 psi. The walls and slab of the SDU's are of reinforced concrete construction and are designed for gravity loads plus

hydrostatic pressure due to the saltstone grout. Foundation design is based on a maximum allowable soil bearing pressure of 6,000 psf. The interior and perimeter walls are 18 inches thick, and the bottom slab is 24 inches thick. Waterstops are provided at all construction joints in the walls and slabs. A polymer plastic Multithane 388 polyurethane coating is applied to the interior surface of the perimeter walls to seal any shrinkage cracks developed during the curing process. Elevation markers fastened to the interior surface of the walls permit monitoring of the saltstone grout fill height. A detailed description of the concrete SDU design is shown in Drawings W780625 and W828992.

SDU 2 is designed for a 22 ft. hydrostatic head based on a specific gravity of 1.3. The roof is 8 inches thick; walls are a minimum of 8 inches thick; and the floor is 12 inches thick utilizing type V concrete – reference WB00001k, sheet 4. SDU's 2A and 2B have 14 inches of type V concrete installed in the bottom of each cell, 2A and 2B.

SDUs 3 & 5 are also designed for a 22 ft. hydrostatic head based on a specific gravity of 1.3. The roof is 8 inches thick; walls are a minimum of 8 inches thick; and the floor is 12 inches thick – reference SRR0000427-106.

A drainage system consisting of paved ditches, underground concrete pipes, and catch basins drains the area around the SDU's into a sedimentation basin. The details of the drainage system are shown in Drawings W780525 and W780526.

Provision is made in the design for final closure of the SDUs with concrete, clay, and soil, as shown in Drawings W780527, W780528, and W780529. The Saltstone Facility receives low level liquid waste to be mixed with grout for permanent disposal as concrete in preexisting SDU's. Revision 10 of the DSA determined that an SDU explosion is not credible while operating in Mode 1.

2.1.11 SDU Temperature Monitoring System

In 2013, Saltstone Facility Documented Safety Analysis, WSRC-SA-2003-00001, Revision 10, downgraded the TMS from Safety Significant (SS) to Process Support (PS) and is no longer a vital system. Its only function is to monitor the temperature of the saltstone monolith.

The SDU Temperature Monitoring System provides temperature indication of the grout in the cells using thermocouple trees and associated temperature transmitters. The SDU 2 & 4 TMS includes three independent trains (i.e., Trains A, B & C) for each cell.

In SDU 4 cells which did not contain grout at the time of installation, the TMS Trains A & B temperature instrumentation provides temperature indications from a height of 1 foot to the design fill height in the cells, with thermocouples located every 12 inches along the length of the tree. For those cells that already contained some amount of grout prior to installation of this system, temperature indication is provided from within 12 inches of the existing grout surface to the design fill height in the cells, with thermocouples located every 12 inches. SDU 4 Cells for TMS Train C contains 8 thermocouples located ever 3 feet along the length of the tree. Train C thermocouples are connected to a Foundation Fieldbus network.

SDU 2 Trains A and B contain 23 thermocouples at 12 inch intervals. Train C contains 22 Thermo-couples at 12 inch intervals. The bottom thermocouple is located at 0.5 feet above the SDU floor.

See Figure 3 for SDU 2 & 4 Trains A/B TMS simplified view.

SDU 3 & 5 Train C contain 23 thermocouples at 12 inch intervals. Train A thermocouple trees only were installed as spare trees. Train C thermocouples are connected to a Foundation Fieldbus network.

2.2 SYSTEM PARAMETERS AND CHARACTERISTICS

2.2.1 Normal Operation (TMS)

The SDU Temperature Monitoring System parameters and characteristics are shown in Table 2.2.1-1.

Table 2.2.1-1 SDU TMS PERFORMANCE Characteristics Under Normal Operating Conditions

Equipment Type (Location)	Equipment Location	Temperature Range	Percent Relative Humidity
Thermocouple Elements	Inside SDU Cells	Mode 1: <85 °C	No Humidity Control 5% to 95%
T/C Terminal Boxes	SDU Roof	Outdoor Ambient 0 °F to 110 °F	No Humidity Control 5% to 95%
Remote Foundation Fieldbus Panels (Train C Only)	SDU Ground Level	Outdoor Ambient 0 °F to 110 °F	No Humidity Control 5% to 95%
PLC Remote Input Panels (SDU 2 & 4 Trains A & B Only)	SDU Ground Level	Between 8 °C and 54 °C	Limited Humidity Control (Installed Space Heater)
Repeater Panels (SDU 2 & 4 Trains A & B Only)	SDU Ground Level	Outdoor Ambient 0 °F to 110 °F	Limited Humidity Control (Installed Space Heater)
PLC Main Control Panels (SDU 2 & 4 Trains A & B Only)	210-Z ICR	Indoor Ambient 70 °F to 80 °F	15% to 80% (Air Conditioned)
PLC Power	210-Z	Indoor Ambient	15% to 80%

Equipment Type (Location)	Equipment Location	Temperature Range	Percent Relative Humidity
Supply Monitor Panels (SDU 2 & 4 Trains A & B Only)	ICR	70 °F to 80 °F	(Air Conditioned)
PLC Output Panels (SDU 2 & 4 Trains A & B Only)	210-Z ICR	Indoor Ambient 70 °F to 80 °F	15% to 80% (Air Conditioned)
Temperature Indication Panels (SDU 2 & 4 Trains A & B Only)	210-Z CCR	Indoor Ambient 70 °F to 80 °F	15% to 80% (Air Conditioned)
I/O Cabinet Foundation Fieldbus Modules (Train C Only)	210-Z CCR	Indoor Ambient 70 °F to 80 °F	15% to 80% (Air Conditioned)

2.2.2 Backup Operation (TMS)

SDU 2 & 4 Temperature Monitoring System consists of two redundant trains (i.e., Trains A & B) to monitor the grout temperature. The SDU 2, 3, 4 & 5 Temperature Monitoring Systems also consist of one Train C loop to monitor grout temperature.

2.3 SYSTEM ARRANGEMENT

2.3.1 Saltstone Building, Support Structures and SDU

The general arrangement of the buildings, support structures and SDU is shown in either Figures 1 or 2.

2.3.2 SDU Temperature Monitoring System

The SDU 2 & 4 Temperature Monitoring System (i.e., Trains A & B) consists of two redundant trains. Each train includes a thermocouple tree in each cell, a Programmable Logic Controller (PLC) Remote Input Panel, a Remote Repeater Panel, a PLC, PLC Power Monitoring Panel, and a PLC Output Panel. The TMS also interfaces through isolated devices with the Distributed Control System to provide monitoring capability. The general arrangement of the SDU 2 & 4 Train A/B Temperature Monitoring System is shown in Figures 3.

TMS thermocouple Train C is installed in the SDU 2, 3, 4, and 5. SDU 2 & 4 TMS Train C provides only temperature indications to the Control Room. SDU 3 & 5 TMS Train C provides DCS temperature indications only. Train C thermocouples are connected to a Foundation Fieldbus network. SDU 2, 3, 4, & 5 TMS Train C components are isolated from SDU 2 & 4 Trains A & B PLC system.

2.4 COMPONENT DESIGN DESCRIPTIONS

2.4.1 SDU Temperature Monitoring System

2.4.1.1 SDU 2 & 4 Trains A & B Temperature Monitoring System

The major components of the SDU Train A or B Thermocouple Tree consist of the following components: 1) Type T Thermocouples, 2) 1 ½ inch Schedule 40 Pipe, and 3) Pipe Filler Material. The thermocouple trees are installed at various lengths inside each of the cells. The thermocouple tree lengths vary according to the grout level in a cell during installation. The thermocouples are installed one foot increments up to the design fill height in each cell.

Type T Thermocouples are devices for measuring temperature in which a pair of wires of dissimilar metals (i.e., copper and constantan) is joined together on one end. The free ends of the wires are routed through a terminal box located on top of the roof and terminated inside the PLC Remote Input Panel located on the side of the SDU at ground level. The PLC Remote Input Panel electronics measure the difference in potential created at the junction of the two metals. This signal is transmitted to the 210-Z control room to provided temperature indication.

The Temperature Monitoring PLC Network consists of two totally independent temperature monitoring paths identified as Train A and Train B. Each train consists of the following:

- ControlNet Communication utilizing trunklines, connecting nodes with taps and droplines.
- Approximately 10 PLC Remote Input Panels (One for each operating SDU Cell). Each remote input panel is located approximately 100 ft from the adjacent panel. Redundant thermocouples are placed inside the PLC Remote Input Panels in order to verify that the components are maintained within the published operating range during operation of a selected cell.
- One Remote Repeater Panel located at SDU which transmits the ControlNet signal to 210-Z Process Building.
- Approximately 1500 feet of coax cable installed between SDU and 210-Z protected by a surge suppressor.
- Main PLC Control Panel which contains redundant PLC processors.

Trains A & B HI HI Temperature Indication Panels are located in the 210-Z Central Control Room. These panels provide local display showing the highest temperature of each train in each SDU cell. There are approximately 10 indicators on each panel. The indication range is between -10 °C to 110 °C.

2.4.1.2 SDU Train C Temperature Monitoring System

The major components of the SDU 4 Train C Thermocouple Tree consist of the following components: 1) Type T Thermocouples, 2) 2 inch Galvanized Steel Conduit, and 3) non-shrink, non-metallic cementitious grout pipe filler material. The thermocouple trees are installed at standard lengths inside each of the SDU 4 cells. The SDU 2, 3 & 5 thermocouples are installed

one foot increments up to the design fill height in each cell. The SDU 4 Train C thermocouples are installed every 3 feet increments up to the design fill height in each cell.

SDU 4 thermocouples are routed through a terminal box located on the side of the cell at ground level. SDU 2, 3, and 5 Train C thermocouples are routed through a terminal box located on the top of the SDU. The thermocouple wires are then terminated to multisensor transmitters. The transmitter's signal is transmitted to the 210-Z control room via Foundation Fieldbus communications to provided temperature indication.

Each SDU Train C loop includes the following equipment:

- Foundation Fieldbus Communication protocol.
- Bulk power supplies. Panel located at SDU which transmits the ControlNet signal to 210-Z Process Building.
- Temperature Multisensor Transmitters.
- Foundation Fieldbus Segment Protectors
- Local Indicators (SDU 4 Only)
- Type T thermocouples.

2.5 INSTRUMENTATION AND CONTROL

2.5.1 SDU Temperature Monitoring System (TMS)

The instrumentation and controls for the SDU Temperature Monitoring System are shown on the drawings and diagrams in Appendix E, Section 2.0 of this SDD. Descriptions of the instrumentation and controls associated with the SDU Temperature Monitoring System are provided below.

The SDU Temperature Monitoring System includes the following typical instrument and control parameters:

TABLE 2.5.1-1a SDU 2 & 4 Trains A & B TMS Instrumentation & Control Parameters

Parameter Description	Function
(TI) SDU Train A Cell Temp.	Indication
(TI) SDU Train A CAB Temp.	Indication
PNL-0011 Light L2A	Indication
(TI) SDU Train B Cell Temp.	Indication
(TI) SDU Train B CAB Temp.	Indication
PNL-0012 Light L2B	Indication

TABLE 2.5.1-1b SDU 2, 3, 4, & 5 Train C TMS Instrumentation & Control Parameters

Parameter Description	Function
(TI) SDU Train C Cell Temp.	Indication

2.5.1.1 SDU 2 & 4 TMS Interlocks

The SDU 2 and 4 TMS interlock function, which stops the transfer of salt solution and dry premix feeds to the mixer if the grout temperature exceeds the interlock setpoint or if the PLC Remote Input cabinet temperature goes outside of the assumed temperature range, has been removed per Rev. 10 of the DSA.2.6 System Interfaces

2.6 SYSTEM INTERFACE

2.6.1 Saltstone Structures & SDU's

Table 2.6.1-1 shows the Saltstone structures and SDU's primary interfaces.

Table 2.6.1-1 Saltstone Structures and SDU's Primary Interfaces

Interfacing System	Interfacing Location	Requirements
G-SD-Z-00001 Saltstone Site	Yard	Provide space, access, and security for buildings, support structures, and SDU's
G-SD-Z-00004 Saltstone Electrical	Buildings, Support Structures, and SDU's	Provide grounding and lightning protection Provide lighting system with normal and standby power Provide communications system with normal, standby, and UPS power
G-SD-Z-00005 Saltstone HVAC	Operations Building (704-Z), Process Building (210-Z), Fire Water Pump House (901-Z), Substation Building (951-Z)	Provide the desired indoor conditions for the buildings and maintain the negative pressure required for the regulated process areas
G-SD-Z-00006 Saltstone Support	All Buildings	Provide domestic water
G-SD-Z-00007 Saltstone Product Laboratory	Product Test Lab	Provide a fume hood, furniture, and sink, including regulated water from the sink

G-SD-Z-00008 Saltstone Fire Protection	All Buildings	Provide a fire protection system for the buildings

Table 2.6.1-2 shows the Saltstone structures and SDU's secondary interfaces.

Table 2.6.1-2 Saltstone Structures and SDU's Secondary Interfaces

Interfacing System	Interfacing Location	Requirements
G-SD-Z-00003 Saltstone Process	Buildings and Support Structures	Provide enclosures, foundations, and support structures for process equipment. Provide piping drains from regulated areas in the buildings
G-SD-Z-00004 Saltstone Electrical	Buildings and Support Structures	Provide enclosures, foundations, and support structures for electrical equipment and raceway Provide continuity of the facility ground grid by cad welding rebar in columns to ground grid and building steel. Also provide PVC Schedule 40 sleeves through the foundation and walls for the instrument and computer insulated grounding systems
G-SD-Z-00005 Saltstone HVAC	Operations Building (704-Z), Process Building (210-Z), Fire Water Pump House (901-Z), Substation Building (951-Z)	Provide enclosures, foundations, and support structures for HVAC equipment
G-SD-Z-00006 Saltstone Support	All Buildings	Provide space and supports required to accommodate building utilities such as process and domestic water, breathing air, plant and instrument air, programmable logic controller, etc.
G-SD-Z-00007 Saltstone Product Laboratory	Product Test Lab	Provide space and support for a fume hood, furniture, and sink. Provide a pipe drain from the sink

G-SD-Z-00008 Saltstone Fire Protection	All Buildings	Provide space and supports to accommodate the fire protection system in buildings, including the Fire Water Pump House (210-Z) and foundation for the Fire Water Tank.
G-SD-Z-00009 SDU 6 Structures & Process Systems	SDUs 3 and/or 5	Provide drainwater drain-back to SDUs 3 and/or 5.

2.6.2 SDU's Temperature Monitoring System

Primary and secondary interfacing system requirements for the SDU Temperature Monitoring System are identified in Appendix C.

3.0 OPERATION

3.1 PRINCIPLES OF OPERATION

3.1.1 Operating Design Basis

3.1.1.1 SDU Temperature Monitoring System

In 2013, Saltstone Facility Documented Safety Analysis, WSRC-SA-2003-00001, Revision 10, downgraded the TMS from Safety Significant (SS) to Process Support (PS) and is no longer a vital system. Its only function is to monitor the temperature of the saltstone monolith.

3.1.2 Control Basis

3.1.2.1 SDU Temperature Monitoring System

The SDU 2, 3, 4, and 5 Temperature Monitoring System provides grout temperature monitoring of the SDU salt monolith. SDU 2, 3, 4, & 5 TMS do not have any control functions.

3.1.3 Operating Points

3.1.3.1 SDU Temperature Monitoring System

The SDU 2 & 4 Temperature Monitoring System is designed to provide redundant trains for each cell.

3.1.4 Operator Functions and Operating Locations

3.1.4.1 SDU Temperature Monitoring System

There are no special operation functions and operating locations associated with the Temperature Monitoring System.

3.1.5 Administrative Aspects

3.1.5.1 SDU Temperature Monitoring System

There are no special administrative aspects associated with the Temperature Monitoring System.

3.2 INITIAL CONFIGURATION

3.2.1 SDU Temperature Monitoring System

There are no initial configurations associated with the Temperature Monitoring System.

3.3 STARTUP

3.3.1 SDU Temperature Monitoring System

There are no special activities required to startup the Temperature Monitoring System.

3.4 NORMAL OPERATION

3.4.1 SDU Temperature Monitoring System

There are no special activities required to operate the Temperature Monitoring System.

3.5 SHUTDOWN

3.5.1 SDU Temperature Monitoring System

There are no special activities required to shutdown the Temperature Monitoring System.

3.6 INFREQUENT OPERATION

3.6.1 SDU Temperature Monitoring System

There are no infrequent operations associated with the SDU Temperature Monitoring System.

4.0 SETPOINTS, SYSTEM LIMITATIONS, AND PRECAUTIONS

4.1 SYSTEM LIMITATIONS AND PRECAUTIONS

4.1.1 SDU Temperature Monitoring System

Operation and maintenance activities on the Temperature Monitoring System shall be performed in accordance with the following precautions and limitations:

- Operation and maintenance activities should be performed and supervised by personnel that are qualified by training and experienced to work on the Temperature Monitoring System.

  Personnel shall comply with all site and facility safety rules.

4.2 SETPOINTS

4.2.1 SDU Temperature Monitoring System

In 2013, Saltstone Facility Documented Safety Analysis, WSRC-SA-2003-00001, Revision 10, downgraded the TMS from Safety Significant (SS) to Process Support (PS) and is no longer a vital system. Its only function is to monitor the temperature of the saltstone monolith. The interlock function, which stops the transfer of salt solution and dry premix feeds to the mixer if the grout temperature exceeds the interlock setpoint or if the PLC Remote Input cabinet temperature goes outside of the assumed temperature range, has been removed per Rev.10 of the DSA. There are no setpoints associated with the SDU Temperature Monitoring System

Table 4.2.1-1a lists major instruments associated with the SDU Temperature Monitoring System Trains A & B.

Table 4.2.1-1b lists major instruments associated with the SDU Temperature Monitoring System Train C.

Table 4.2.1-2 lists Trains A/B PLC Instrument Software Tags associated with the PLC ControlNet Network

Table 4.2.1-3 lists Trains A & B Temperature Monitoring System PLC Output Software Tags.

TABLE 4.2.1-1a SDU TMS Major Instruments Trains A and B

Instrument Number	Description	Function
Z-451003-SSD-TE- 3131-01A thru 23A	Spare Thermocouples	SDU 3A TRAIN-A THERMOCOUPLES 3131-01A thru 23A
Z-451003-SSD-TW- 3131A	Spare Thermoweld	SDU 3A TRAIN-A THERMOWELL
Z-451003-SSD-TE- 3141-01A thru 23A	Spare Thermocouples	SDU 3B TRAIN-A THERMOCOUPLES 3141-01A thru 23A
Z-451003-SSD-TW- 3141A	Spare Thermoweld	SDU 3B TRAIN-A THERMOWELL
Z-451005-SSD-TE- 5131-01A thru 23A	Spare Thermocouples	SDU 5A TRAIN-A THERMOCOUPLE 5131-01A thru 23A
Z-451005-SSD-TW- 5131A	Spare Thermoweld	SDU 5A TRAIN-A THERMOWELL
Z-451005-SSD-TE- 5141-01A thru 23A	Spare Thermocouples	SDU 5B TRAIN-A THERMOCOUPLE 5141-01A thru 23A
Z-451005-SSD-TW- 5141A	Spare Thermoweld	SDU 5B TRAIN-A THERMOWELL
Z-451002-SSD-TE-2131-01A thru 23A	Thermocouple	SDU #2, CELL 2A, Train A, T/C TREE #2131A

TABLE 4.2.1-1a SDU TMS Major Instruments Trains A and B		
Instrument Number	Description	Function
Z-451002-SSD-TE-2131-01B thru 23B	Thermocouple	SDU #2, CELL 2A, Train B T/C TREE #2131B
Z-451002-SSD-TE-2141-01A thru 023A	Thermocouple	SDU #2, CELL 2B, TRAIN A T/C TREE #2141A
Z-451002-SSD-TE-2141-01B thru 23B	Thermocouple	SDU #2, CELL 2B, TRAIN B T/C TREE #2141B
Z-451002-SSD-TE-2151-1A & 2A	Thermocouple	SDU# 2A, TRAIN A, I/O CABINET T/C TE-2151-1A & 2A
Z-451002-SSD-TE-2151-1B & 2B	Thermocouple	SDU# 2A, TRAIN B, I/O CABINET T/C TE-2151-1B & 2B
Z-451002-SSD-TE-2155-1A & 2A	Thermocouple	SDU# 2B, TRAIN A, I/O CABINET T/C TE-2155-1A & 2A
Z-451002-SSD-TE-2155-1B & 2B	Thermocouple	SDU# 2B, TRAIN B, I/O CABINET T/C TE-2155-1B & 2B
Z-451002-SSD-TW-2131A	Thermowell	SDU #2, CELL A, TRAIN A T/C TREE
Z-451002-SSD-TW-2131B	Thermowell	SDU #2, CELL A, TRAIN B T/C TREE
Z-451002-SSD-TW-2141A	Thermowell	SDU #2, CELL B, TRAIN A, T/C TREE
Z-451002-SSD-TW-2241B	Thermowell	SDU #2, CELL B, TRAIN B T/C TREE
Z-451004-SSD-TE-7201-01A thru 27A	Thermocouple	Senses temperature in SDU 4 Cell B Train A.
Z-451004-SSD-TE-7201-01B thru 27B	Thermocouple	Senses temperature in SDU 4 Cell B Train B
Z-451004-SSD-TE-7202-16A thru 27A	Thermocouple	Senses temperature in SDU 4 Cell C Train A.
Z-451004-SSD-TE-7202-16B thru 27B	Thermocouple	Senses temperature in SDU 4 Cell C Train B.
Z-451004-SSD-TE-7203-01A thru 27A	Thermocouple	Senses temperature in SDU 4 Cell D Train A.
Z-451004-SSD-TE-7203-01B thru 27B	Thermocouple	Senses temperature in SDU 4 Cell D Train B.
Z-451004-SSD-TE-7204-09A thru 27A	Thermocouple	Senses temperature in SDU 4 Cell E Train A.
Z-451004-SSD-TE-7204-09B thru 27B	Thermocouple	Senses temperature in SDU 4 Cell E Train B.
Z-451004-SSD-TE-7205-02A thru 27A	Thermocouple	Senses temperature in SDU 4 Cell F Train A.
Z-451004-SSD-TE-7205-02B thru 27B	Thermocouple	Senses temperature in SDU 4 Cell F Train B.
Z-451004-SSD-TE-7206-01A	Thermocouple	Senses temperature in SDU 4 Cell H

TABLE 4.2.1-1a SDU TMS Major Instruments Trains A and B		
Instrument Number	Description	Function
thru 27A		Train A.
Z-451004-SSD-TE-7206-01B thru 27B	Thermocouple	Senses temperature in SDU 4 Cell H Train B.
Z-451004-SSD-TE-7207-14A thru 27A	Thermocouple	Senses temperature in SDU 4 Cell I Train A
Z-451004-SSD-TE-7207-14B thru 27B	Thermocouple	Senses temperature in SDU 4 Cell I Train B.
Z-451004-SSD-TE-7208-03A thru 27A	Thermocouple	Senses temperature in SDU 4 Cell J Train A.
Z-451004-SSD-TE-7208-03B thru 27B	Thermocouple	Senses temperature in SDU 4 Cell J Train B.
Z-451004-SSD-TE-7209-01A thru 27A	Thermocouple	Senses temperature in SDU 4 Cell K Train A.
Z-451004-SSD-TE-7209-01B thru 27B	Thermocouple	Senses temperature in SDU 4 Cell K Train B.
Z-451004-SSD-TE-7210-08A thru 27A	Thermocouple	Senses temperature in SDU 4 Cell L Train A.
Z-451004-SSD-TE-7210-08B thru 27B	Thermocouple	Senses temperature in SDU 4 Cell L Train B.
Z-451004-SSD-TE-7221-1A and 2A	Thermocouple	Senses temperature in SDU 4 Cell B Train A PLC Remote Input Cab.
Z-451004-SSD-TE-7221-1B and 2B	Thermocouple	Senses temperature in SDU 4 Cell B Train B PLC Remote Input Cab.
Z-451004-SSD-TE-7225-1A and 2A	Thermocouple	Senses temperature in SDU 4 Cell D Train A PLC Remote Input Cab.
Z-451004-SSD-TE-7225-1B and 2B	Thermocouple	Senses temperature in SDU 4 Cell D Train B PLC Remote Input Cab.
Z-451004-SSD-TE-7227-1A and 2A	Thermocouple	Senses temperature in SDU 4 Cell E Train A PLC Remote Input Cab.
Z-451004-SSD-TE-7227-1B and 2B	Thermocouple	Senses temperature in SDU 4 Cell E Train B PLC Remote Input Cab.
Z-451004-SSD-TE-7229-1A and 2A	Thermocouple	Senses temperature in SDU 4 Cell F Train A PLC Remote Input Cab.
Z-451004-SSD-TE-7229-1B and 2B	Thermocouple	Senses temperature in SDU 4 Cell F Train B PLC Remote Input Cab.
Z-451004-SSD-TE-7231-1A and 2A	Thermocouple	Senses temperature in SDU 4 Cell H Train A PLC Remote Input Cab.
Z-451004-SSD-TE-7231-1B and 2B	Thermocouple	Senses temperature in SDU 4 Cell H Train B PLC Remote Input Cab.
Z-451004-SSD-TE-7235-1A and 2A	Thermocouple	Senses temperature in SDU 4 Cell J Train A PLC Remote Input Cab.

TABLE 4.2.1-1a SDU TMS Major Instruments Trains A and B		
Instrument Number	Description	Function
Z-451004-SSD-TE-7235-1B and 2B	Thermocouple	Senses temperature in SDU 4 Cell J Train B PLC Remote Input Cab.
Z-451004-SSD-TE-7237-1A and 2A	Thermocouple	Senses temperature in SDU 4 Cell K Train A PLC Remote Input Cab.
Z-451004-SSD-TE-7237-1B and 2B	Thermocouple	Senses temperature in SDU 4 Cell K Train B PLC Remote Input Cab.
Z-451004-SSD-TE-7239-1A and 2A	Thermocouple	Senses temperature in SDU 4 Cell L Train A PLC Remote Input Cab.
Z-451004-SSD-TE-7239-1B and 2B	Thermocouple	Senses temperature in SDU 4 Cell L Train B PLC Remote Input Cab.
Z-210000-SSD-TI-7201A	Temperature Indicator	Provides CCR Display of SDU 4 Cell B Train A Highest Temperature.
Z-210000-SSD-TI-7201B	Temperature Indicator	Provides CCR Display of SDU 4 Cell B Train B Highest Temperature.
Z-210000-SSD-TI-2131A	Temperature Indicator	Provides CCR Display of SDU 2 Cell 2A Train A Highest Temperature.
Z-210000-SSD-TI-2131B	Temperature Indicator	Provides CCR Display of SDU 2 Cell 2A Train B Highest Temperature.
Z-210000-SSD-TI-7203A	Temperature Indicator	Provides CCR Display of SDU 4 Cell D Train A Highest Temperature.
Z-210000-SSD-TI-7203B	Temperature Indicator	Provides CCR Display of SDU 4 Cell D Train B Highest Temperature.
Z-210000-SSD-TI-7204A	Temperature Indicator	Provides CCR Display of SDU 4 Cell E Train A Highest Temperature.
Z-210000-SSD-TI-7204B	Temperature Indicator	Provides CCR Display of SDU 4 Cell E Train B Highest Temperature.
Z-210000-SSD-TI-7205A	Temperature Indicator	Provides CCR Display of SDU 4 Cell F Train A Highest Temperature.
Z-210000-SSD-TI-7205B	Temperature Indicator	Provides CCR Display of SDU 4 Cell F Train B Highest Temperature.
Z-210000-SSD-TI-7206A	Temperature Indicator	Provides CCR Display of SDU 4 Cell H Train A Highest Temperature.
Z-210000-SSD-TI-7206B	Temperature Indicator	Provides CCR Display of SDU 4 Cell H Train A Highest Temperature.

TABLE 4.2.1-1a SDU TMS Major Instruments Trains A and B		
Instrument Number	Description	Function
Z-210000-SSD-TI-2141A	Temperature Indicator	Provides CCR Display of SDU 2 Cell 2B Train A Highest Temperature.
Z-210000-SSD-TI-2141B	Temperature Indicator	Provides CCR Display of SDU 2 Cell 2B Train B Highest Temperature.
Z-210000-SSD-TI-7208A	Temperature Indicator	Provides CCR Display of SDU 4 Cell J Train A Highest Temperature.
Z-210000-SSD-TI-7208B	Temperature Indicator	Provides CCR Display of SDU 4 Cell J Train B Highest Temperature.
Z-210000-SSD-TI-7209A	Temperature Indicator	Provides CCR Display of SDU 4 Cell K Train A Highest Temperature.
Z-210000-SSD-TI-7209B	Temperature Indicator	Provides CCR Display of SDU 4 Cell K Train B Highest Temperature.
Z-210000-SSD-TI-7210A	Temperature Indicator	Provides CCR Display of SDU 4 Cell L Train A Highest Temperature.
Z-210000-SSD-TI-7210B	Temperature Indicator	Provides CCR Display of SDU 4 Cell L Train B Highest Temperature.
Z-210000-SSD-TSHH-7201-01A through 27A	PLC Temperature Switch	Activates a SDU 4 Cell B Train A High Temperature condition which interlocks the SFT pump & Screw Feeders. (interlock function removed)
Z-210000-SSD-TSHH-7201-01B through 27B	PLC Temperature Switch	Activates a SDU 4 Cell B Train B High Temperature condition which interlocks the SFT pump & Screw Feeders. (interlock function removed)
Z-210000-SSD-TSHH-7203-01A through 27A	PLC Temperature Switch	Activates a SDU 4 Cell D Train A High Temperature condition which interlocks the SFT pump & Screw Feeders. (interlock function removed)
Z-210000-SSD-TSHH-7203-01B through 27B	PLC Temperature Switch	Activates a SDU 4 Cell D Train B High Temperature condition which interlocks the SFT pump & Screw Feeders. (interlock function removed)
Z-210000-SSD-TSHH-7204-09A through 27A	PLC Temperature Switch	Activates a SDU 4 Cell E Train A High Temperature condition which interlocks the SFT pump & Screw Feeders. (interlock function removed)
Z-210000-SSD-TSHH-7204-09B through 27B	PLC Temperature Switch	Activates a SDU 4 Cell E Train B High Temperature condition which interlocks the SFT pump & Screw Feeders. (interlock function removed)

TABLE 4.2.1-1a SDU TMS Major Instruments Trains A and B		
Instrument Number	Description	Function
Z-210000-SSD-TSHH-7205-02A through 27A	PLC Temperature Switch	Activates a SDU 4 Cell F Train A High Temperature condition which interlocks the SFT pump & Screw Feeders. (interlock function removed)
Z-210000-SSD-TSHH-7205-02B through 27B	PLC Temperature Switch	Activates a SDU 4 Cell F Train B High Temperature condition which interlocks the SFT pump & Screw Feeders. (interlock function removed)
Z-210000-SSD-TSHH-7206-01A through 27A	PLC Temperature Switch	Activates a SDU 4 Cell H Train A High Temperature condition which interlocks the SFT pump & Screw Feeders. (interlock function removed)
Z-210000-SSD-TSHH-7206-01B through 27B	PLC Temperature Switch	Activates a SDU 4 Cell H Train B High Temperature condition which interlocks the SFT pump & Screw Feeders. (interlock function removed)
Z-210000-SSD-TSHH-7208-03A through 27A	PLC Temperature Switch	Activates a SDU 4 Cell J Train A High Temperature condition which interlocks the SFT pump & Screw Feeders. (interlock function removed)
Z-210000-SSD-TSHH-7208-03B through 27B	PLC Temperature Switch	Activates a SDU 4 Cell J Train B High Temperature condition which interlocks the SFT pump & Screw Feeders. (interlock function removed)
Z-210000-SSD-TSHH-7209-01A through 27A	PLC Temperature Switch	Activates a SDU 4 Cell K Train A High Temperature condition which interlocks the SFT pump & Screw Feeders. (interlock function removed)
Z-210000-SSD-TSHH-7209-01B through 27B	PLC Temperature Switch	Activates a SDU 4 Cell K Train B High Temperature condition which interlocks the SFT pump & Screw Feeders. (interlock function removed)
Z-210000-SSD-TSHH-7210-10A through 27A	PLC Temperature Switch	Activates a SDU 4 Cell L Train A High Temperature condition which interlocks the SFT pump & Screw Feeders. (interlock function removed)
Z-210000-SSD-TSHH-7210-10B through 27B	PLC Temperature Switch	Activates a SDU 4 Cell L Train B High Temperature condition which interlocks the SFT pump & Screw Feeders. (interlock function removed)
Z-210000-SSD-TSHH-7221-1A & 2A	PLC Temperature Switch	Activates a SDU 4 Cell B Train A High Cabinet Temperature condition which interlocks the SFT pump &

TABLE 4.2.1-1a SDU TMS Major Instruments Trains A and B		
Instrument Number	Description	Function
		Screw Feeders. (interlock function removed)
Z-210000-SSD-TSHH-7221-1B & 2B	PLC Temperature Switch	Activates a SDU 4 Cell B Train B High Cabinet Temperature condition which interlocks the SFT pump & Screw Feeders. (interlock function removed)
Z-210000-SSD-TSHH-7225-1A & 2A	PLC Temperature Switch	Activates a SDU 4 Cell D Train A High Cabinet Temperature condition which interlocks the SFT pump & Screw Feeders. (interlock function removed)
Z-210000-SSD-TSHH-7225-1B & 2B	PLC Temperature Switch	Activates a SDU 4 Cell D Train B High Cabinet Temperature condition which interlocks the SFT pump & Screw Feeders. (interlock function removed)
Z-210000-SSD-TSHH-7227-1A & 2A	PLC Temperature Switch	Activates a SDU 4 Cell E Train A High Cabinet Temperature condition which interlocks the SFT pump & Screw Feeders. (interlock function removed)
Z-210000-SSD-TSHH-7227-1B & 2B	PLC Temperature Switch	Activates a SDU 4 Cell E Train B High Cabinet Temperature condition which interlocks the SFT pump & Screw Feeders. (interlock function removed)
Z-210000-SSD-TSHH-7229-1A & 2A	PLC Temperature Switch	Activates a SDU 4 Cell F Train A High Cabinet Temperature condition which interlocks the SFT pump & Screw Feeders. (interlock function removed)
Z-210000-SSD-TSHH-7229-1B & 2B	PLC Temperature Switch	Activates a SDU 4 Cell F Train B High Cabinet Temperature condition which interlocks the SFT pump & Screw Feeders. (interlock function removed)
Z-210000-SSD-TSHH-7231-1A & 2A	PLC Temperature Switch	Activates a SDU 4 Cell H Train A High Cabinet Temperature condition which interlocks the SFT pump & Screw Feeders. (interlock function removed)

TABLE 4.2.1-1a SDU TMS Major Instruments Trains A and B		
Instrument Number	Description	Function
Z-210000-SSD-TSHH-7231-1B & 2B	PLC Temperature Switch	Activates a SDU 4 Cell H Train B High Cabinet Temperature condition which interlocks the SFT pump & Screw Feeders. (interlock function removed)
Z-210000-SSD-TSHH-7235-1A & 2A	PLC Temperature Switch	Activates a SDU 4 Cell J Train A High Cabinet Temperature condition which interlocks the SFT pump & Screw Feeders. (interlock function removed)
Z-210000-SSD-TSHH-7235-1B & 2B	PLC Temperature Switch	Activates a SDU 4 Cell J Train B High Cabinet Temperature condition which interlocks the SFT pump & Screw Feeders. (interlock function removed)
Z-210000-SSD-TSHH-7237-1A & 2A	PLC Temperature Switch	Activates a SDU 4 Cell K Train A High Cabinet Temperature condition which interlocks the SFT pump & Screw Feeders. (interlock function removed)
Z-210000-SSD-TSHH-7237-1B & 2B	PLC Temperature Switch	Activates a SDU 4 Cell K Train B High Cabinet Temperature condition which interlocks the SFT pump & Screw Feeders. (interlock function removed)
Z-210000-SSD-TSHH-7239-1A & 2A	PLC Temperature Switch	Activates a SDU 4 Cell L Train A High Cabinet Temperature condition which interlocks the SFT pump & Screw Feeders. (interlock function removed)
Z-210000-SSD-TSHH-7239-1B & 2B	PLC Temperature Switch	Activates a SDU 4 Cell L Train B High Cabinet Temperature condition which interlocks the SFT pump & Screw Feeders. (interlock function removed)
Z-210000-SSD-TSLL-7221-1A & 2A	PLC Temperature Switch	Activates a SDU 4 Cell B Train A Low Cabinet Temperature condition which interlocks the SFT pump & Screw Feeders. (interlock function removed)
Z-210000-SSD-TSLL-7221-1B & 2B	PLC Temperature Switch	Activates a SDU 4 Cell B Train B Low Cabinet Temperature condition which interlocks the SFT pump &

TABLE 4.2.1-1a SDU TMS Major Instruments Trains A and B		
Instrument Number	Description	Function
		Screw Feeders. (interlock function removed)
Z-210000-SSD-TSLL-7225-1A & 2A	PLC Temperature Switch	Activates a SDU 4 Cell D Train A Low Cabinet Temperature condition which interlocks the SFT pump & Screw Feeders. (interlock function removed)
Z-210000-SSD-TSLL-7225-1B & 2B	PLC Temperature Switch	Activates a SDU 4 Cell D Train B Low Cabinet Temperature condition which interlocks the SFT pump & Screw Feeders. (interlock function removed)
Z-210000-SSD-TSLL-7227-1A & 2A	PLC Temperature Switch	Activates a SDU 4 Cell E Train A Low Cabinet Temperature condition which interlocks the SFT pump & Screw Feeders. (interlock function removed)
Z-210000-SSD-TSLL-7227-1B & 2B	PLC Temperature Switch	Activates a SDU 4 Cell E Train B Low Cabinet Temperature condition which interlocks the SFT pump & Screw Feeders. (interlock function removed)
Z-210000-SSD-TSLL-7229-1A & 2A	PLC Temperature Switch	Activates a SDU 4 Cell F Train A Low Cabinet Temperature condition which interlocks the SFT pump & Screw Feeders. (interlock function removed)
Z-210000-SSD-TSLL-7229-1B & 2B	PLC Temperature Switch	Activates a SDU 4 Cell F Train B Low Cabinet Temperature condition which interlocks the SFT pump & Screw Feeders. (interlock function removed)
Z-210000-SSD-TSLL-7231-1A & 2A	PLC Temperature Switch	Activates a SDU 4 Cell H Train A Low Cabinet Temperature condition which interlocks the SFT pump & Screw Feeders. (interlock function removed)
Z-210000-SSD-TSLL-7231-1B & 2B	PLC Temperature Switch	Activates a SDU 4 Cell H Train B Low Cabinet Temperature condition which interlocks the SFT pump & Screw Feeders. (interlock function removed)

TABLE 4.2.1-1a SDU TMS Major Instruments Trains A and B		
Instrument Number	Description	Function
Z-210000-SSD-TSLL-7235-1A & 2A	PLC Temperature Switch	Activates a SDU 4 Cell J Train A Low Cabinet Temperature condition which interlocks the SFT pump & Screw Feeders. (interlock function removed)
Z-210000-SSD-TSLL-7235-1B & 2B	PLC Temperature Switch	Activates a SDU 4 Cell J Train B Low Cabinet Temperature condition which interlocks the SFT pump & Screw Feeders. (interlock function removed)
Z-210000-SSD-TSLL-7237-1A & 2A	PLC Temperature Switch	Activates a SDU 4 Cell K Train A Low Cabinet Temperature condition which interlocks the SFT pump & Screw Feeders. (interlock function removed)
Z-210000-SSD-TSLL-7237-1B & 2B	PLC Temperature Switch	Activates a SDU 4 Cell K Train B Low Cabinet Temperature condition which interlocks the SFT pump & Screw Feeders. (interlock function removed)
Z-210000-SSD-TSLL-7239-1A & 2A	PLC Temperature Switch	Activates a SDU 4 Cell L Train A Low Cabinet Temperature condition which interlocks the SFT pump & Screw Feeders. (interlock function removed)
Z-210000-SSD-TSLL-7239-1B & 2B	PLC Temperature Switch	Activates a SDU 4 Cell L Train B Low Cabinet Temperature condition which interlocks the SFT pump & Screw Feeders. (interlock function removed)
Z Z-210000-SSD-US-7241-1A	PLC Interlock Switch	Activates a SDU 4 Train A Hardwired interlock which stops the SFT pump & Screw Feeders. (interlock function removed)
Z Z-210000-SSD-US-7241-2A	PLC Interlock Switch	Activates a SDU 4 Train A Hardwired interlock which stops the SFT pump & Screw Feeders. (interlock function removed)
Z Z-210000-SSD-US-7241-1B	PLC Interlock Switch	Activates a SDU 4 Train B Hardwired interlock which stops the SFT pump & Screw Feeders. (interlock function removed)

TABLE 4.2.1-1a SDU TMS Major Instruments Trains A and B		
Instrument Number	Description	Function
Z Z-210000-SSD-US-7241-2B	PLC Interlock Switch	Activates a SDU 4 Train B Hardwired interlock which stops the SFT pump & Screw Feeders. (interlock function removed)

TABLE 4.2.1-1b SDU TMS Major Instruments Train C		
Instrument Number	Description	Function
Z-451003-SSD-TE- 3121A thru W	Thermocouple	SDU 3A TRAIN-C THERMOCOUPLE 3121A thru W
Z-451003-SSD-TE- 3121A	Thermowell	SDU 3A TRAIN-C Thermowell
Z-451003-SSD-UT-3120 / 3121 / 3122 / 3123	Transmitters	Transmit Foundation Fieldbus Signals for SDU 3A Train C
Z-451003-SSD-TE- 3221A thru W	Thermocouple	SDU 3B TRAIN-C THERMOCOUPLE 3221A thru W
Z-451003-SSD-TE- 3221A	Thermowell	SDU 3B TRAIN-C Thermowell
Z-451003-SSD-UT-3220 / 3221 / 3222 / 3223	Transmitters	Transmit Foundation Fieldbus Signals for SDU 3B Train C
Z-451005-SSD-TE- 5121A thru W	Thermocouple	SDU 5A TRAIN-C THERMOCOUPLE 5121A thru W
Z-451005-SSD-TW- 5121A	Thermowell	SDU 5A TRAIN-C Thermowell
Z-451005-SSD-UT-5120 / 5121 / 5122 / 5123	Transmitters	Transmit Foundation Fieldbus Signals for SDU 5A Train C
Z-451005-SSD-TE- 5221A thru W	Thermocouple	SDU 5B TRAIN-C THERMOCOUPLE 5221A thru W
Z-451005-SSD-TW- 5221A	Thermowell	SDU 5B TRAIN-C Thermowell
Z-451005-SSD-UT-5220 / 5221 / 5222 / 5223	Transmitters	Transmit Foundation Fieldbus Signals for SDU 5B Train C
Z-451002-SSD-TE- 2121A thru V	Thermocouple	SDU 2A TRAIN-C THERMOCOUPLE 2121A thru V
Z-451002-SSD-TW- 2121	Thermowell	SDU2A TRAIN-C Thermowell
Z-451002-SSD-UT-2120 / 2121 / 2122 / 2123	Transmitters	Transmit Foundation Fieldbus Signals for SDU 2A Train C
Z-451002-SSD-TE- 2221A thru V	Thermocouple	SDU 2B TRAIN-C THERMOCOUPLE 2221A thru V

TABLE 4.2.1-1b SDU TMS Major Instruments Train C		
Instrument Number	Description	Function
Z-451002-SSD-TW- 2221	Thermowell	SDU2B TRAIN-C Thermowell
Z-451002-SSD-UT-2220 / 2221 / 2222 / 2223	Transmitters	Transmit Foundation Fieldbus Signals for SDU 2B Train C
Z-451004-SSD-TE-0920A thru H	Thermocouple	SDU4 Cell B THERMOCOUPLES
Z-451005-SSD-UT- 0920	Transmitters	Transmit Foundation Fieldbus Signals for SDU4 Cell B Train C
Z-451004-SSD-TE-0922A thru H	Thermocouple	SDU4 Cell C THERMOCOUPLES
Z-451005-SSD-UT- 0922	Transmitters	Transmit Foundation Fieldbus Signals for SDU4 Cell C Train C
Z-451004-SSD-TE-0926A thru H	Thermocouple	SDU4 Cell E THERMOCOUPLES
Z-451005-SSD-UT- 0926	Transmitters	Transmit Foundation Fieldbus Signals for SDU4 Cell E Train C
Z-451004-SSD-TE-0928A thru H	Thermocouple	SDU4 Cell F THERMOCOUPLES
Z-451005-SSD-UT- 0928	Transmitters	Transmit Foundation Fieldbus Signals for SDU4 Cell F Train C
Z-451004-SSD-TE-0919A thru H	Thermocouple	SDU4 Cell G THERMOCOUPLES
Z-451005-SSD-UT- 0919	Transmitters	Transmit Foundation Fieldbus Signals for SDU4 Cell G Train C
Z-451004-SSD-TE-0921A thru H	Thermocouple	SDU4 Cell H THERMOCOUPLES
Z-451005-SSD-UT- 0921	Transmitters	Transmit Foundation Fieldbus Signals for SDU4 Cell H Train C
Z-451004-SSD-TE-0923A thru H	Thermocouple	SDU4 Cell I THERMOCOUPLES
Z-451005-SSD-UT- 0923	Transmitters	Transmit Foundation Fieldbus Signals for SDU4 Cell I Train C
Z-451004-SSD-TE-0925A thru H	Thermocouple	SDU4 Cell J THERMOCOUPLES
Z-451005-SSD-UT- 0925	Transmitters	Transmit Foundation Fieldbus Signals for SDU4 Cell J Train C
Z-451004-SSD-TE-0927A thru H	Thermocouple	SDU4 Cell K THERMOCOUPLES
Z-451005-SSD-UT- 0927	Transmitters	Transmit Foundation Fieldbus Signals for SDU4 Cell K Train C

TABLE 4.2.1-2 SDU TMS Trains A/B (Instrument) Software Tags			
PLC Software Tag	Description	Function	DCS EPN Indications
TY-7201-01A thru 27A	T/C Measuring Modules	Converts/Transmits temperature signal to Train A PLC for SDU 4 Cell B	TI-7201_01A thru 27A
TY-7201-01B thru 27B	T/C Measuring Modules	Converts/Transmits temperature signal to Train B PLC for SDU 4 Cell B	TI-7201_01B thru 27B
TY-7203-01A thru 27A	T/C Measuring Modules	Converts/Transmits temperature signal to Train A PLC for SDU 4 Cell D	TI-7203_01A thru 27A
TY-7203-01B thru 27B	T/C Measuring Modules	Converts/Transmits temperature signal to Train B PLC for SDU 4 Cell D	TI-7203_01B thru 27B
TY-7204-09A thru 27A	T/C Measuring Modules	Converts/Transmits temperature signal to Train A PLC for SDU 4 Cell E	TI-7204_09A thru 27A
TY-7204-09B thru 27B	T/C Measuring Modules	Converts/Transmits temperature signal to Train B PLC for SDU 4 Cell E	TI-7204_09B thru 27B
TY-7205-02A thru 27A	T/C Measuring Modules	Converts/Transmits temperature signal to Train A PLC for SDU 4 Cell F	TI-7205_02A thru 27A
TY-7205-02B thru 27B	T/C Measuring Modules	Converts/Transmits temperature signal to Train B PLC for SDU 4 Cell F	TI-7205_02B thru 27B
TY-7206-01A thru 27A	T/C Measuring Modules	Converts/Transmits temperature signal to Train A PLC for SDU 4 Cell H	TI-7206_01A thru 27A
TY-7206-01B thru 27B	T/C Measuring Modules	Converts/Transmits temperature signal to Train B PLC for SDU 4 Cell H	TI-7206_01B thru 27B
TY-7208-03A thru 27A	T/C Measuring Modules	Converts/Transmits temperature signal to Train A PLC for SDU 4 Cell J	TI-7208_03A thru 27A
TY-7208-03B thru 27B	T/C Measuring Modules	Converts/Transmits temperature signal to Train B PLC for SDU 4 Cell J	TI-7208_03B thru 27B

TABLE 4.2.1-2 SDU TMS Trains A/B (Instrument) Software Tags			
PLC Software Tag	Description	Function	DCS EPN Indications
TY-7209-01A thru 27A	T/C Measuring Modules	Converts/Transmits temperature signal to Train A PLC for SDU 4 Cell K	TI-7209_01A thru 27A
TY-7209-01B thru 27B	T/C Measuring Modules	Converts/Transmits temperature signal to Train B PLC for SDU 4 Cell K	TI-7209_01B thru 27B
TY-7210-08A thru 27A	T/C Measuring Modules	Converts/Transmits temperature signal to Train A PLC for SDU 4 Cell L	TI-7210_08A thru 27A
TY-7210-08B thru 27B	T/C Measuring Modules	Converts/Transmits temperature signal to Train B PLC for SDU 4 Cell L	TI-7210_08B thru 27B
TY-7221-1A & 2A	T/C Measuring Modules	Converts/Transmits temperature signal to Train A PLC for SDU 4 Cell B Remote PLC Input Cab.	TI-7221_1A & 2A
TY-7221-1B & 2B	T/C Measuring Modules	Converts/Transmits temperature signal to Train B PLC for SDU 4 Cell B Remote PLC Input Cab.	TI-7221_1B & 2B
TY-7225-1A & 2A	T/C Measuring Modules	Converts/Transmits temperature signal to Train A PLC for SDU 4 Cell D Remote PLC Input Cab.	TI-7225_1A & 2A
TY-7225-1B & 2B	T/C Measuring Modules	Converts/Transmits temperature signal to Train B PLC for SDU 4 Cell D Remote PLC Input Cab.	TI-7225_1B & 2B
TY-7227-1A & 2A	T/C Measuring Modules	Converts/Transmits temperature signal to Train A PLC for SDU 4 Cell E Remote PLC Input Cab.	TI-7227_1A & 2A
TY-7227-1B & 2B	T/C Measuring Modules	Converts/Transmits temperature signal to Train B PLC for SDU 4 Cell E Remote PLC Input Cab.	TI-7227_1B & 2B
TY-7229-1A & 2A	T/C Measuring Modules	Converts/Transmits temperature signal to Train A PLC for SDU 4 Cell F	TI-7229-_1A & 2A

TABLE 4.2.1-2 SDU TMS Trains A/B (Instrument) Software Tags			
PLC Software Tag	Description	Function	DCS EPN Indications
		Remote PLC Input Cab.	
TY-7229-1B & 2B	T/C Measuring Modules	Converts/Transmits temperature signal to Train B PLC for SDU 4 Cell F Remote PLC Input Cab.	TI-7229_1B & 2B
TY-7231-1A & 2A	T/C Measuring Modules	Converts/Transmits temperature signal to Train A PLC for SDU 4 Cell H Remote PLC Input Cab.	TI-7231_1A & 2A
TY-7231-1B & 2B	T/C Measuring Modules	Converts/Transmits temperature signal to Train B PLC for SDU 4 Cell H Remote PLC Input Cab.	TI-7231_1B & 2B
TY-7235-1A & 2A	T/C Measuring Modules	Converts/Transmits temperature signal to Train A PLC for SDU 4 Cell J Remote PLC Input Cab.	TI-7235_1A & 2A
TY-7235-1B & 2B	T/C Measuring Modules	Converts/Transmits temperature signal to Train B PLC for SDU 4 Cell J Remote PLC Input Cab.	TI-7235_1B & 2B
TY-7237-1A & 2A	T/C Measuring Modules	Converts/Transmits temperature signal to Train A PLC for SDU 4 Cell K Remote PLC Input Cab.	TI-7237_1A & 2A
TY-7237-1B & 2B	T/C Measuring Modules	Converts/Transmits temperature signal to Train B PLC for SDU 4 Cell K Remote PLC Input Cab.	TI-7237_1B & 2B
TY-7239-1A & 2A	T/C Measuring Modules	Converts/Transmits temperature signal to Train A PLC for SDU 4 Cell L Remote PLC Input Cab.	TI-7239_1A & 2A
TY-7239-1B & 2B	T/C Measuring Modules	Converts/Transmits temperature signal to Train B PLC for SDU 4 Cell L Remote PLC Input Cab.	TI-7239_1B & 2B

TABLE 4.2.1-3 SDU TMS Trains A/B PLC Output Software Tags

PLC Output Software Tag	Description	Function
TY-7201A	PLC analog output module	Provides PNL-7201 Display of SDU 4 Cell B Train A Highest Temperature (TI-7201A).
TY-7201B	PLC analog output module	Provides PNL-7202 of SDU 4 Cell B Train B Highest Temperature (TI-7201B)
TY-7203A	PLC analog output module	Provides PNL-7201 Display of SDU 4 Cell D Train A Highest Temperature (TI-7203A).
TY-7203B	PLC analog output module	Provides PNL-7202 of SDU 4 Cell D Train B Highest Temperature (TI-7203B)
TY-7204A	PLC analog output module	Provides PNL-7201 Display of SDU 4 Cell E Train A Highest Temperature (TI-7204A).
TY-7204B	PLC analog output module	Provides PNL-7202 of SDU 4 Cell E Train B Highest Temperature (TI-7204B)
TY-7205A	PLC analog output module	Provides PNL-7201 Display of SDU 4 Cell F Train A Highest Temperature (TI-7205A).
TY-7205B	PLC analog output module	Provides PNL-7202 of SDU 4 Cell F Train B Highest Temperature (TI-7205B)
TY-7206A	PLC analog output module	Provides PNL-7201 Display of SDU 4 Cell H Train A Highest Temperature (TI-7206A).
TY-7206B	PLC analog output module	Provides PNL-7202 of SDU 4 Cell H Train B Highest Temperature (TI-7206B)
TY-7208A	PLC analog output module	Provides PNL-7201 Display of SDU 4 Cell J Train A Highest Temperature (TI-7208A).
TY-7208B	PLC analog output module	Provides PNL-7202 of SDU 4 Cell J Train B Highest Temperature (TI-7208B)
TY-7209A	PLC analog output module	Provides PNL-7201 Display of SDU 4 Cell K Train A Highest Temperature (TI-7209A).
TY-7209B	PLC analog output module	Provides PNL-7202 of SDU 4 Cell K Train B Highest Temperature (TI-7209B)
TY-7210A	PLC analog output module	Provides PNL-7201 Display of SDU 4 Cell L Train A Highest Temperature (TI-7210A).
TY-7210B	PLC analog output module	Provides PNL-7202 of SDU 4 Cell L Train B Highest Temperature (TI-7210B)

TABLE 4.2.1-3 SDU TMS Trains A/B PLC Output Software Tags

PLC Output Software Tag	Description	Function
US-7201A	PLC Digital output module	Provides a COMMON TROUBLE alarm at the DCS for SDU 4 Cell B Train A (UA-7201A).
US-7201B	PLC Digital output module	Provides a COMMON TROUBLE alarm at the DCS for SDU 4 Cell B Train B (UA-7201B)
US-7203A	PLC Digital output module	Provides a COMMON TROUBLE alarm at the DCS for SDU 4 Cell D Train A (UA-7203A).
US-7203B	PLC Digital output module	Provides a COMMON TROUBLE alarm at the DCS for SDU 4 Cell D Train B (UA-7203B)
US-7204A	PLC Digital output module	Provides a COMMON TROUBLE alarm at the DCS for SDU 4 Cell E Train A (UA-7204A).
US-7204B	PLC Digital output module	Provides a COMMON TROUBLE alarm at the DCS for SDU 4 Cell E Train B (UA-7204B)
US-7205A	PLC Digital output module	Provides a COMMON TROUBLE alarm at the DCS for SDU 4 Cell F Train A (UA-7205A).
US-7205B	PLC Digital output module	Provides a COMMON TROUBLE alarm at the DCS for SDU 4 Cell F Train B (UA-7205B)
US-7206A	PLC Digital output module	Provides a COMMON TROUBLE alarm at the DCS for SDU 4 Cell H Train A (UA-7206A).
US-7206B	PLC Digital output module	Provides a COMMON TROUBLE alarm at the DCS for SDU 4 Cell H Train B (UA-7206B)
US-7208A	PLC Digital output module	Provides a COMMON TROUBLE alarm at the DCS for SDU 4 Cell J Train A (UA-7208A).
US-7208B	PLC Digital output module	Provides a COMMON TROUBLE alarm at the DCS for SDU 4 Cell J Train B (UA-7208B)
US-7209A	PLC Digital output module	Provides a COMMON TROUBLE alarm at the DCS for SDU 4 Cell K Train A (UA-7209A).
US-7209B	PLC Digital output module	Provides a COMMON TROUBLE alarm at the DCS for SDU 4 Cell K Train B (UA-7209B)
US-7210A	PLC Digital output module	Provides a COMMON TROUBLE alarm at the DCS for SDU 4 Cell L Train A (UA-7210A).
US-7210B	PLC Digital output module	Provides a COMMON TROUBLE alarm at the DCS for SDU 4 Cell L Train B (UA-7210B)

5.0 SYSTEM UPSETS AND RECOVERY SEQUENCES

5.1 UPSET EVENTS

5.1.1 SDU Temperature Monitoring System

In 2013, Saltstone Facility Documented Safety Analysis, WSRC-SA-2003-00001, Revision 10, downgraded the TMS from Safety Significant (SS) to Process Support (PS) and is no longer a vital system. Its only function is to monitor the temperature of the saltstone monolith. There are no special upset events associated with the SDU Temperature Monitoring System

5.2 DESIGN FEATURES TO MITIGATE EFFECTS OF UPSET EVENTS

5.2.1 SDU Temperature Monitoring System

In 2013, Saltstone Facility Documented Safety Analysis, WSRC-SA-2003-00001, Revision 10, downgraded the TMS from Safety Significant (SS) to Process Support (PS) and is no longer a vital system. Its only function is to monitor the temperature of the saltstone monolith. There are no special design features to mitigate effect of upset events associated with the SDU Temperature Monitoring System.

6.0 MAINTENANCE

The maintenance program at Saltstone Facility assures compliance with DOE Order 433.1, Maintenance Management Program for DOE Nuclear Facilities. Procedure Manual 1Y, Conduct of Maintenance Manual, was established to set cost-effective maintenance standards that are to be used for equipment management at the Savannah River Site. The program is intended to maintain the structures, systems, equipment, and components in a safe, cost effective manner. The maintenance program is designed to fulfill this objective at a minimum cost utilizing existing resources. The maintenance program addresses subjects such as M&TE, work control, planning and scheduling, root cause analysis, maintenance history, management involvement and training and qualifications.

Manual 1Y Conduct of Maintenance also addresses the following items:

- Maintenance Approach
- Corrective Maintenance
- Preventive Maintenance
- In-Service Inspections

6.1 SURVEILLANCE

6.1.1 Structures & SDU's

No special requirements other than normal SRS maintenance practices, if any, for the structures described in this SDD are applicable.

6.1.2 Saltstone Disposal Process Systems

No special requirements other than normal SRS maintenance practices, if any, for the Saltstone Disposal Process Systems described in this SDD are applicable.

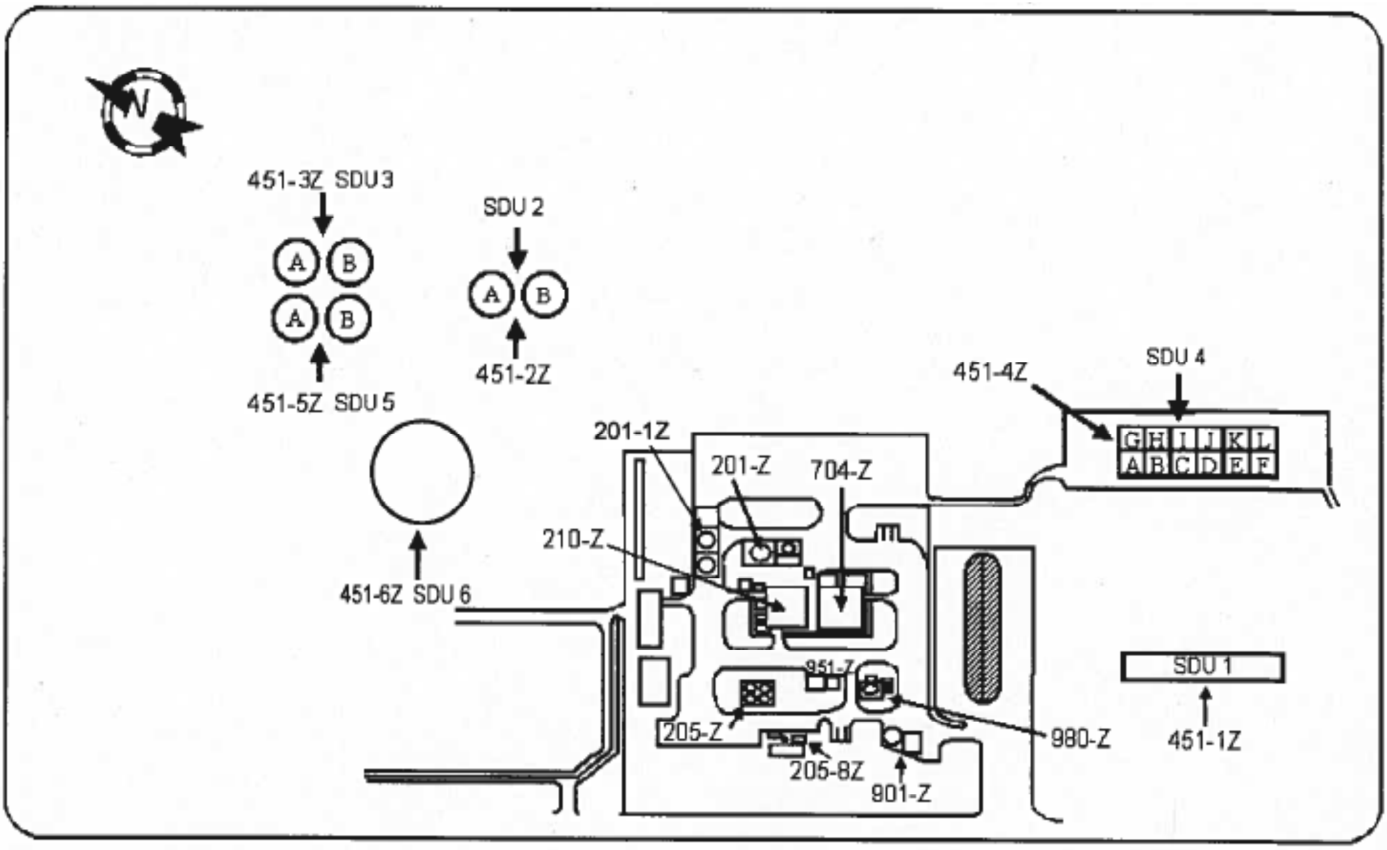

Figure 1, Site Plan

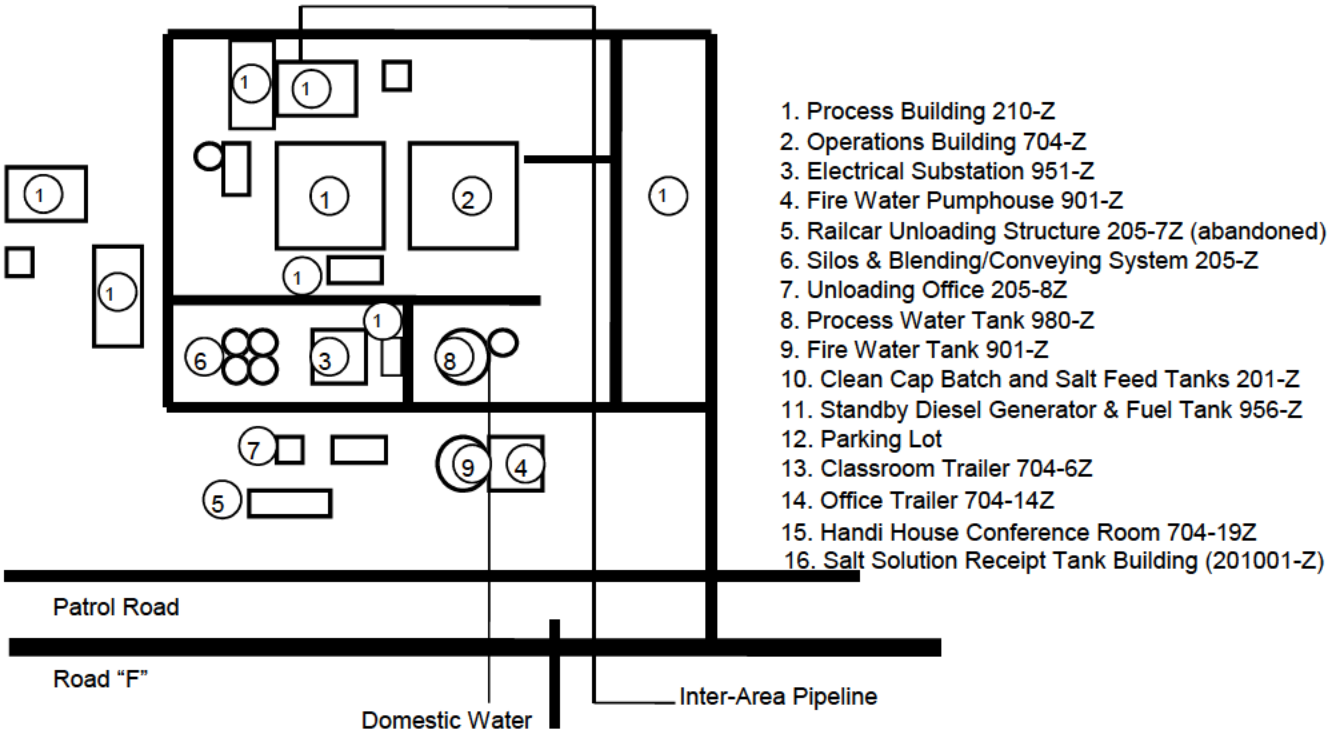

FIGURE 2, OPERATIONS AREA PLAN

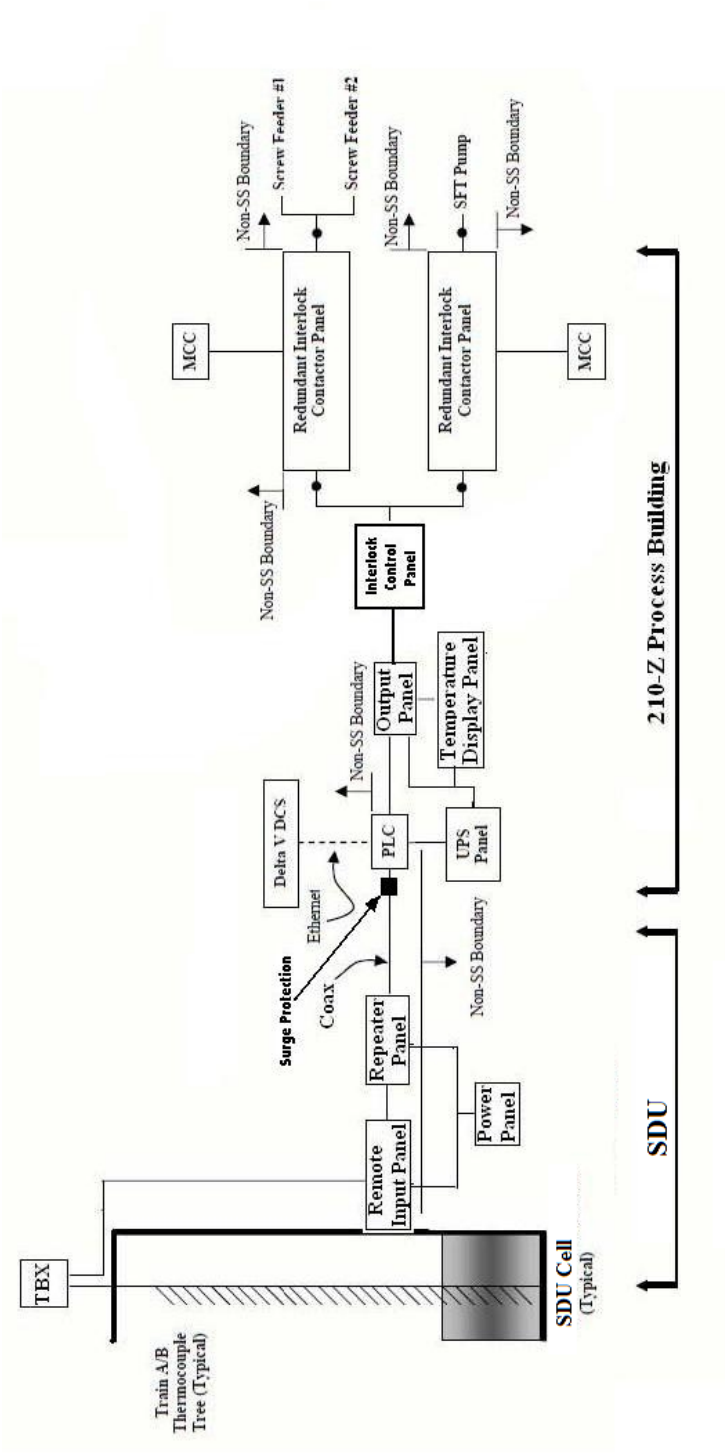

FIGURE 3, SDU TRAINS A/B TEMPERATURE MONITORING SYSTEM (SIMPLIFIED VIEW)

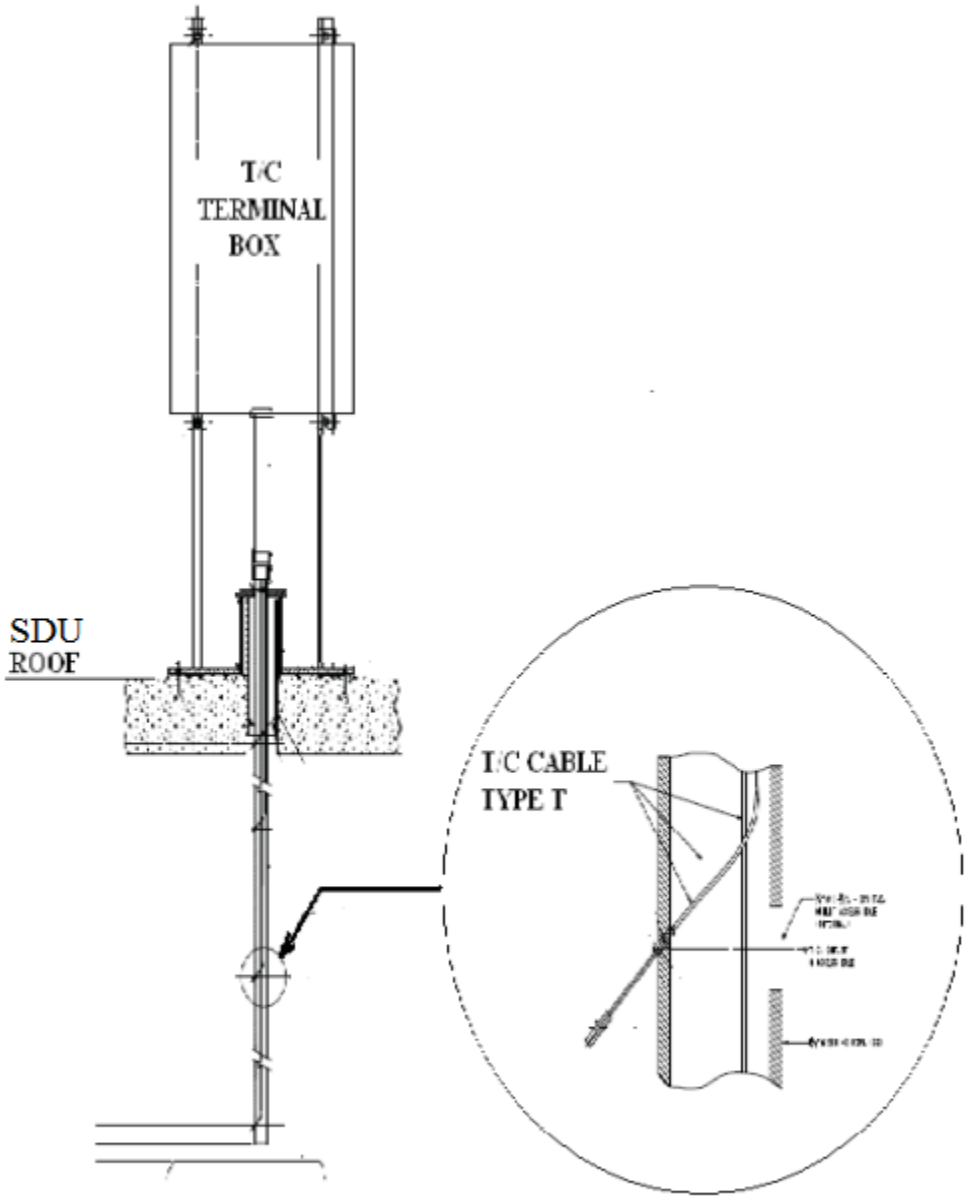

FIGURE 4, TYPICAL SDU TRAIN THERMOCOUPLE TREE

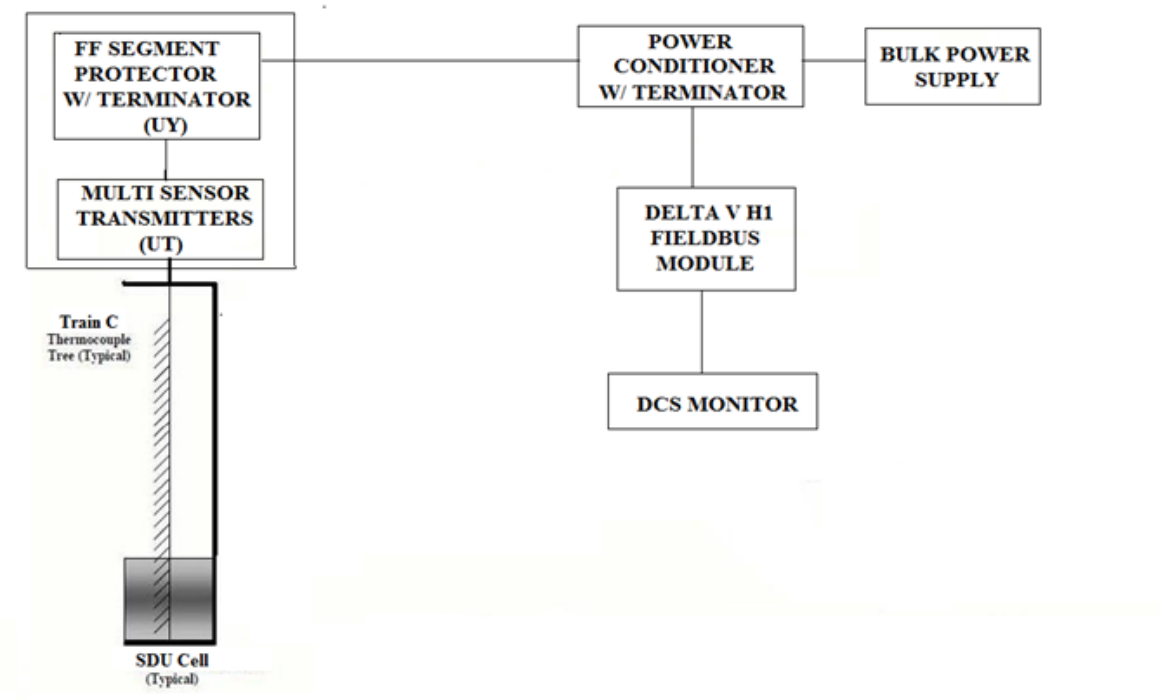

FIGURE 5, SDU TRAIN C TEMPERATURE MONITORING SYSTEM (SIMPLIFIED VIEW)

7.0 APPENDICES

APPENDIX A REFERENCES

A.1.0 CORRESPONDENCE

A.1.1 Van Peursem, Bruce, "Engineering Position on SDU 4 Start Up Testing Strategy," LWO-WSE-2008-00107, Washington Savannah River Company, Aiken, SC. May 2008.

A.1.2 Maximum Amount of Isopar L to Remain Below the Lower Flammability Limit. S-CLC-Z-00067, Rev. 2, Washington Savannah River Company, Aiken, SC.

A.2.0 TECHNICAL REPORTS

A.2.1 WSRC-SA-2003-00001, Rev. 10, Saltstone Facility Documented Safety Analysis

A.2.1 WSRC-SA-2003-00001, Rev. 11, Saltstone Facility Documented Safety Analysis

A.2.2 S-TSR-Z-00002, Rev. 2013-A, Technical Safety Requirements Savannah River Site Saltstone Facility

A.3.0 OTHER DOCUMENTS

A.3.1 MT-WD-2006-00016, Rev. 0, "Saltstone Vault 4 Organic Modifications"

A.3.2 J-DCP-Z-06005, Rev. 3, "SDU 4 Organic Modifications Train A & B Temperature Control System"

A.3.3 J-SPP-Z-00003, Rev. 1 "Temperature Monitoring PLC System Procurement Specification"

A.3.4 J-ESR-Z-00002, Rev. 0 "Safety Requirement Specification"

A.3.5 J-RS-Z-00005, Rev. 1 "Saltstone Temperature Monitoring System PLC Requirement Specification"

A.3.6 B-SQP-Z-00002, Rev. 2, "SSF Software Quality Assurance Plan"

A.3.7 G-BFA-Z-00001 Rev. 7, "Saltstone Backfit Analysis Package Vault 4 Cell Vents Safety Significant"

A.4.0 CALCULATIONS

A.4.1 J-CLC-Z-00001, Rev. 2 "SIL VERIFICATION FOR GROUT FEED INTERLOCK SSIS-A FOR CELLS B, D, E, F, H, J, K AND L FOR VAULT 4, "A" TRAIN"

A.4.2 J-CLC-Z-00004, Rev. 2 "SIL Verification for Grout Feed Interlock SSIS-B for Cells B, D, E, F, H, J, K AND L for Vault 4, "B" TRAIN"

A.4.3 J-CLC-Z-00003, Rev. 1 "Instrumentation Uncertainties Evaluation Vault #4 Train A&B Temperature

A.4.4 J-CLC-Z-00006, Rev. 0 [Preliminary: SIL verification for Grout Feed Interlock, Vault 2, SSIS-B]

A.4.5 J-CLC-Z-00007, Rev. 0 [Instrumentation Uncertainties Evaluation Vault #2A and #2B Train A&B Temperature]

APPENDIX B BASES FOR SAFETY FUNCTIONS AND DESIGN REQUIREMENTS

B.1.1.2.1 SDU CELL VENTS

The source of this function is:

Reference: WSRC-SA-2003-00001. Rev. 13, Sections 2.4, 2.5.1.7, 3.3.2.3, 4.4.1, G-BFA-Z-00001 Rev. 7

Bases:

The SDU cell passive vents are required to ensure flammable gases do not accumulate in the SDU vapor space. The SDU cell passive vents provide a connection between the SDU cell vapor space and environment that allows the displacement of vapor space volume during pouring and passive breathing, which reduces the accumulation of flammable gases in the SDU cell vapor space.

APPENDIX C INTERFACE REQUIREMENTS (TMS)

Interfacing Systems		Requirements
Primary	**Secondary**	
	G-SD-Z-00001 Saltstone Site	• Building [BLDG]
G-SD-Z-00003 Saltstone Process		• SFT • Bulk Material Handling [BMH]
G-SD-Z-00004 Saltstone Electrical		• Standby Power [EEP] • 120V Normal Power Distribution [ELLV] • Uninterruptible Power Supply[UPS]
	G-SD-Z-00004 Saltstone Electrical	• 480V Power Distribution [ELNH]
	G-SD-Z-00005 Saltstone HVAC	• Heating, Ventilation, & Air Conditioning [HVAC]
G-SD-Z-00006 Saltstone Support		• Distributed Control System [DCS]
	G-SD-Z-00008 Saltstone Fire Protection	• Fire Protection [PF]

APPENDIX D INSTRUMENTATION AND CONTROL CHANNEL LIST

See WSRC TECHBASE resource report for site system(s) in the SDD.

APPENDIX E DRAWINGS

The following drawings are referenced in this SDD for Saltstone Structures and SDU's.

Drawing No.	Title
W775900	Saltstone Process Building 210Z – Plan General Arrangement/Equipment Location
W775911	Salt Solution Hold & Flush Water Receipt Tanks – Plan General Arrangement/Equipment Location – Above Tanks
W780400	Process Building Floor Plan
W780410	Fire Protection Pump House – Plan and Elevations
W780421	Substation Building-Plan, Elevations and Sections
W780425	Unloading Control Office – Plan, Elevations, Sections and Details
W780431	Operations Building – Floor Plan
W780434	Operations Building – Sections
W780438	Operations Building – Plumbing Fixture Schedule & Diagram
W780439	Operations Building – Plumbing Piping, Sheet 1 of 4
W780440	Operations Building – Plumbing Piping, Sheet 2 of 4
W780441	Operations Building – Plumbing Piping, Sheet 3 of 4
W780442	Operations Building – Plumbing Piping, Sheet 4 of 4
W780525	Saltstone Disposal Site – Drainage Plan
W780526	Saltstone Disposal Site – Storm Sewer Profile
W780527	Saltstone Disposal Site – Final Closure Grading Plan, Sheet 1 of 2
W780528	Saltstone Disposal Site – Final Closure Grading Plan, Sheet 2 of 2
W780529	Saltstone Disposal Site – Final Closure Grading Sections
W780551	Process Building – Foundation Plan
W780552	Process Building – Foundation Sections
W780553	Process Building – Foundation Sections and Details
W780556	Process Building – Floor Slab Plan
W780557	Process Building – Floor Slab Sections and Details, Sheet 1 of 2
W780558	Process Building – Floor Slab Sections and Details, Sheet 2 of 2
W780561	Process Building – Equipment Supports Plan and Sections
W780570	Process Building – Monorail and Patented Track Supports Framing Plan, Sections and Details
W780572	Process Building – Feed Bin and Weigh Hopper Support Framing Plan, Sections and Details
W780587	Process Building – Mixer Support Platform Plan, Sections and Details
W780588	Process Building – Mixer Support Platform Sections and Details
W780591	Salt Solution and Flush Water Tank Enclosure – Floor and Foundation Plan and Sections

Drawing No.	Title
W780592	Salt Solution and Flush Water Tank Enclosure – Floor and Foundation Sections
W780593	Salt Solution and Flush Water Tank Enclosure – Roof Platform and Monorail Framing Plans
W780595	Salt Solution and Flush Water Tank Enclosure – Elevations and Sections
W780598	Process Building – Exhaust Stack and Outside Duct Supports Plan, Sections and Details
W780601	Railroad Shed – Foundation and Roof Framing Plans, Sections and Details
W780602	Silo and Premix Blending Equipment Support Structure – Foundation and Equipment Plan
W780603	Silo and Premix Blending Equipment Support Structure – Foundation Sections
W780604	Silo and Premix Blending Equipment Support Structure – Foundation Sections and Details
W780605	Silo and Premix Blending Equipment Support Structure – Platform Framing Plans
W780606	Silo and Premix Blending Equipment Support Structure – Platform Framing Plan, Elevations and Sections
W780607	Silo and Premix Blending Equipment Support Structure – Platform Framing Elevations and Sections
W780611	Railroad Shed – Retractable Platform
W780622	Saltstone Surface Disposal SDU – Foundation and Floor Plan and Weather Protection Cover Framing Plans
W780623	Saltstone Surface Disposal SDU – Sections and Details
W780625	Saltstone Surface Disposal SDU – Foundation and Floor Plan, Elevations and Sections
W780626	Saltstone Surface Disposal SDU – Rail Base Plate and other Details
W780627	Saltstone Surface Disposal SDU Weather Protection Covers – Framing Plans
W780628	Saltstone Surface Disposal SDU Weather Protection Covers – Framing Plans and Sections
W780629	Saltstone Surface Disposal SDU Weather Protection Covers – Sections and Truss Details
W780630	Saltstone Surface Disposal SDU Weather Protection Covers – Sections and Details, Sheet 1 of 2
W780631	Saltstone Surface Disposal SDU Weather Protection Covers – Sections and Details, Sheet 2 of 2
W780634	Outdoor Tank and Pump Supports – Plan and Sections

Drawing No.	Title
W780641	Operations Building – Foundation and Floor Slab Plan, Sections and Details
W780770	Fire Protection Pump House, Valve Houses and Tank Foundations – Plans, Sections and Details
W828992	Saltstone SDU 4 – Plan, Sections, and Details
W830707	Saltstone SDU 4 – Cover Sections and Details, Sheet. 1
W830708	Saltstone SDU 4 – Cover Sections and Details, Sheet. 2
W830709	Saltstone SDU 4 – Cover Framing Plans
C-CC-Z-0011	Saltstone SDU #4 General Notes and Abbreviations Sheet #1
C-CC-Z-0012	Saltstone SDU #4 Permanent Roof Plan
C-CC-Z-0013	Saltstone SDU #4 Permanent Roof Concrete Sections and Details Sht 1
C-CC-Z-0014	Saltstone SDU #4 Permanent Roof Concrete Sections and Details Sht 2
C-CS-Z-0001	Saltstone SDU #4 Permanent Roof Steel Sections and Details Sht 1
C-CS-Z-0002	Saltstone SDU #4 Permanent Roof Steel Sections and Details Sht 2
P-PI-Z-0004	0.2Ci/Gal Saltstone Modification Project Isometric - 1" Drainwater Line
M-M6-Z-0045	Saltstone SDU #4 Piping and Instrument Diagram
M-M6-Z-00105	CBU – Waste Solidification Projects Saltstone Facility Saltstone SDU No. 4 Portable Ventilation Skid Piping and Instrument Diagram

The following drawings are associated with the SDU 4 Temperature Monitoring System:

Drawing No.	Title
E-E4-Z-00072	SALTSTONE FACILITY TRAIN A&B INTERLOCK CONTROL SCHEMATIC
E-E4-Z-00077	SALTSTONE FACILITY TRAIN A&B ANNUNCIATOR PANEL SCHEMATIC
E-E4-Z-0025	CABINET 3 I/O POWER DISTRIBUTION DIAGRAM
E-EP-Z-00004	WASTE SOLIDIFICATION PROJECTS SALTSTONE FACILITY SFT HIGH TEMP INTERLOCK CONTACTOR PANEL
E-EP-Z-00005	WASTE SOLIDIFICATION PROJECTS SALTSTONE FACILITY PREMIX SCREWFEEDERS 1 & 2 HIGH TEMP INTERLOCK CONTACTOR PANEL
E-EP-Z-00006	WASTE SOLIDIFICATION PROJECTS SALTSTONE FACILITY SDU #4 ORGANIC MODIFICATIONS HIGH TEMPERATURE INTERLOCK CONTROL PANEL Z-210000-SSD-PNL-0011 TRAIN A LAYOUT AND WIRING DIAGRAM ELECTRICAL (U)

Drawing No.	Title
E-EP-Z-00007	WASTE SOLIDIFICATION PROJECTS SALTSTONE FACILITY SDU #4 ORGANIC MODIFICATIONS HIGH TEMPERATURE INTERLOCK CONTACTOR PANEL LAYOUT AND WIRING TRAIN B Z-210000-SFT-PNL-0004 (U)
E-EP-Z-00008	WASTE SOLIDIFICATION PROJECTS SALTSTONE FACILITY SDU #4 ORGANIC MODIFICATIONS HIGH TEMPERATURE INTERLOCK CONTACTOR PANEL Z-210000-BMH-PNL-0005 TRAIN B LAYOUT AND WIRING DIAGRAM ELECTRICAL (U)
E-EP-Z-00009	WASTE SOLIDIFICATION PROJECTS SALTSTONE FACILITY SDU #4 ORGANIC MODIFICATIONS HIGH TEMPERATURE INTERLOCK CONTROL PANEL Z-210000-SSD-PNL-0012 LAYOUT AND WIRING DIAGRAM ELECTRICAL (U)
E-ER-Z-00011	SDU 4, ORG MODS, CABLE TRAY, RACEWAY AND ELECTRICAL AND INSTRUMENT EQUIPMENT LAYOUT
E-ES-Z-00014	SDU 4, ORG MODS, PANELS Y1 AND Y2 SCHEDULES
E-EW-Z-00013	SDU 4 TRAIN A AND B TEMPERATURE MONITORING WIRING DIAGRAM
J-CLC-Z-00001	SIL Verification for temperature monitoring system SSIS-A interlocks for cell B Thru F and cell H Thru L for SDU 4, '"A" Train
J-CLC-Z-00004	SIL Verification for temperature monitoring system SSIS-B interlocks for cell B Thru F and cell H Thru L for SDU 4, "B" Train
J-DS-Z-00037	Saltstone DCS I/O List
J-DS-Z-00037	CABINET 1, 2, 3, 4A, AND 4B INPUT/OUTPUT DATABASE
J-J2-Z-00029	SDU 4 TRAIN A&B TEMPERATURE MONITORING CLD
J-J4-Z-00058	SDU 4 CELL B TRAIN A TE-7201-01A THRU TE-7201-27A LOOP DIA
J-J4-Z-00059	SDU 4 CELL B TRAIN B TE-7201-01B THRU TE-7201-27B LOOP DIA
J-J4-Z-00060	SDU 4 CELL C TRAIN A TE-7202-01A THRU TE-7202-27A LOOP DIA
J-J4-Z-00061	SDU 4 CELL C TRAIN B TE-7202-01B THRU TE-7202-27B LOOP DIA
J-J4-Z-00062	SDU 4 CELL D TRAIN A TE-7203-01A THRU TE-7203-27A LOOP DIA
J-J4-Z-00063	SDU 4 CELL D TRAIN B TE-7203-01B THRU TE-7203-27B LOOP DIA
J-J4-Z-00064	SDU 4 CELL E TRAIN A TE-7204-01A THRU TE-7204-27A LOOP DIA
J-J4-Z-00065	SDU 4 CELL E TRAIN B TE-7204-01B THRU TE-7204-27B LOOP DIA

Drawing No.	Title
J-J4-Z-00066	SDU 4 CELL F TRAIN A TE-7205-01A THRU TE-7205-27A LOOP DIA
J-J4-Z-00067	SDU 4 CELL F TRAIN B TE-7205-01B THRU TE-7205-27B LOOP DIA
J-J4-Z-00068	SDU 4 CELL H TRAIN A TE-7206-01A THRU TE-7206-27A LOOP DIA
J-J4-Z-00069	SDU 4 CELL H TRAIN B TE-7206-01B THRU TE-7206-27B LOOP DIA
J-J4-Z-00070	SDU 4 CELL I TRAIN A TE-7207-01A THRU TE-7207-27A LOOP DIA
J-J4-Z-00071	SDU 4 CELL I TRAIN B TE-7207-01B THRU TE-7207-27B LOOP DIA
J-J4-Z-00072	SDU 4 CELL J TRAIN A TE-7208-01A THRU TE-7208-27A LOOP DIA
J-J4-Z-00073	SDU 4 CELL J TRAIN B TE-7208-01B THRU TE-7208-27B LOOP DIA
J-J4-Z-00074	SDU 4 CELL K TRAIN A TE-7209-01A THRU TE-7209-27A LOOP DIA
J-J4-Z-00075	SDU 4 CELL K TRAIN B TE-7209-01B THRU TE-7209-27B LOOP DIA
J-J4-Z-00076	SDU 4 CELL L TRAIN A TE-7210-01A THRU TE-7210-27A LOOP DIA
J-J4-Z-00077	SDU 4 CELL L TRAIN B TE-7210-01B THRU TE-7210-27B LOOP DIA
J-J4-Z-00078	SDU 4 TRAIN A TI-7201A THRU TI-7210A LOOP DIA
J-J4-Z-00079	SDU 4 TRAIN B TI-7201B THRU TI-7210B LOOP DIA
J-JC-Z-0003	SALTSTONE PROCESS BUILDING I/O CABINET #3 PANEL LAYOUT
J-JD-Z-00045	SDU 4 TRAIN A&B TEMP INDICATORS DATA SHEET
J-JD-Z-00046	SDU 4 TRAIN A&B TEMP ANNUNCIATOR DATA SHEET
J-JD-Z-00048	SDU 4 TRAIN A&B PLC I/O LIST
J-JL-Z-00009	SDU 4 TRAINS A AND B TEMPERATURE INDICATION AND ALARM PANELS
J-JQ-Z-00013	TRAIN A PLC NETWORK COMMUNICATION AND WIRING
J-JQ-Z-00014	TRAIN B PLC NETWORK COMMUNICATION AND WIRING
J-JQ-Z-00015	SALTSTONE SDU #4 ORGANIC MODIFICATIONS PLC TO DCS COMMUNICATION CONNECTION DIAGRAM
J-JQ-Z-00016	ETHERNET CABLE LAYOUT FOR PLC TO DCS COMMUNICATION

Drawing No.	Title
J-JZ-Z-00071	SALTSTONE INSTRUMENT SCALING AND SETPOINT DOCUMENT Z451-ZZZT-7201A SDU 4 CELL B TRAIN A THERMOCOUPLE TREE TEMPERATURE
J-JZ-Z-00073	SALTSTONE INSTRUMENT SCALING AND SETPOINT DOCUMENT Z451-ZZZT-7201B SDU 4 CELL B TRAIN B THERMOCOUPLE TREE TEMPERATURE
J-JZ-Z-00075	SALTSTONE INSTRUMENT SCALING AND SETPOINT DOCUMENT Z451-ZZZT-7206A SDU 4 CELL H TRAIN A THERMOCOUPLE TREE TEMPERATURE
J-JZ-Z-00076	SALTSTONE INSTRUMENT SCALING AND SETPOINT DOCUMENT Z451-ZZZT-7206B SDU 4 CELL H TRAIN B THERMOCOUPLE TREE TEMPERATURE
J-JZ-Z-00077	SALTSTONE INSTRUMENT SCALING AND SETPOINT DOCUMENT Z451-ZZZT-7208A SDU 4 CELL J TRAIN A THERMOCOUPLE TREE TEMPERATURE
J-JZ-Z-00079	SALTSTONE INSTRUMENT SCALING AND SETPOINT DOCUMENT Z451-ZZZT-7208BSDU 4 CELL J TRAIN B THERMOCOUPLE TREE TEMPERATURE
J-JZ-Z-00080	SALTSTONE INSTRUMENT SCALING AND SETPOINT DOCUMENT Z451-ZZZT-7209A SDU 4 CELL K TRAIN A THERMOCOUPLE TREE TEMPERATURE
J-JZ-Z-00081	SALTSTONE INSTRUMENT SCALING AND SETPOINT DOCUMENT Z451-ZZZT-7209B SDU 4 CELL K TRAIN B THERMOCOUPLE TREE TEMPERATURE
J-JZ-Z-00083	SALTSTONE INSTRUMENT SCALING AND SETPOINT DOCUMENT Z451-ZZZT-7203A SDU 4 CELL D TRAIN A THERMOCOUPLE TREE TEMPERATURE
J-JZ-Z-00084	SALTSTONE INSTRUMENT SCALING AND SETPOINT DOCUMENT Z451-ZZZT-7203B SDU 4 CELL D TRAIN B THERMOCOUPLE TREE TEMPERATURE
J-JZ-Z-00085	SALTSTONE INSTRUMENT SCALING AND SETPOINT DOCUMENT Z451-ZZZT-7204A SDU 4 CELL E TRAIN A THERMOCOUPLE TREE TEMPERATURE
J-JZ-Z-00087	SALTSTONE INSTRUMENT SCALING AND SETPOINT DOCUMENT Z451-ZZZT-7210A SDU 4 CELL L TRAIN A THERMOCOUPLE TREE TEMPERATURE
J-JZ-Z-00088	SALTSTONE INSTRUMENT SCALING AND SETPOINT DOCUMENT Z451-ZZZT-7204B SDU 4 CELL E TRAIN B THERMOCOUPLE TREE TEMPERATURE
J-JZ-Z-00089	SALTSTONE INSTRUMENT SCALING AND SETPOINT DOCUMENT Z451-ZZZT-7210B SDU 4 CELL L TRAIN B THERMOCOUPLE TREE TEMPERATURE

Drawing No.	Title
J-JZ-Z-00090	SALTSTONE INSTRUMENT SCALING AND SETPOINT DOCUMENT Z451-ZZZT-7205A SDU 4 CELL F TRAIN A THERMOCOUPLE TREE TEMPERATURE
J-JZ-Z-00091	SALTSTONE INSTRUMENT SCALING AND SETPOINT DOCUMENT Z451-ZZZT-7205B SDU 4 CELL F TRAIN B THERMOCOUPLE TREE TEMPERATURE
J-L6-Z-0001	SALTSTONE FACILITY DELTA V CONTROL SYSTEM ARCHITECTURE
J-L6-Z-0001	SALTSTONE FACILITY DELTA V CONTROL SYSTEM – ARCHITECTURE
M-M6-Z-00104	SDU 4 TRAIN A&B TEMPERATURE MONITORING P&ID
M-M6-Z-0074	SFT P & ID DIAGRAM
W754529	PREMIX FEED BIN AND WEIGH HOPPER P &ID DIAGRAM
W768571	PROGRAMMABLE CONTROLLER CONSOLE ARRANGEMENT
W774005	PROCESS BUILDING SINGLE LINE DIAGRAM 480V MCC B123 (STAND-BY POWER) CBU – WASTE SOLIDIFICATION PROJECTS SALTSTONE FACILITY
W774008	210-Z, 120/208VAC UPS SINGLE LINE DIAGRAM
W774010	PROCESS BUILDING SINGLE LINE DIAGRAM 480V MCC B124 SHEET 2 E&I ELECTRICAL SAVANNAH RIVER PLANT-200Z AREA DWPF-SALTSTONE
W774020	SSHT & SFT PUMPS, AND HCV-1048, -1055, -1117 & -5168 SCHEMATIC DIAGRAM
W774033	PROCESS BUILDING SINGLE LINE DIAGRAM 480V MCC B124 SHEET 2 E&I ELECTRICAL SAVANNAH RIVER PLANT-200Z AREA DWPF-SALTSTONE
W774052	210-Z, 480VAC FEEDER CABLE BLOCK DIAGRAMS
W774053	120VAC PANEL & FUSE BOX SCHEDULES PNL Y168 AND FUSE BOX TBC1004
W774202	210-Z, WEST SIDE EXPOSED RACEWAY LAYOUT
J-SPP-Z-00003	Temperature Monitoring PLC System Procurement Specification
AC48254A – 011	CNET FIBER MEDIA PLANNING AND INSTALLATION GUIDE 1786 SERIES
AC48254A – 013	CNET COAX TAP INSTALLATION INSTRUCTIONS
AC48254A – 030	MAIN CONTROL PANEL PNL-0001A TRAIN A COVER SHEET
AC48254A – 031	MAIN CONTROL PANEL PNL-0001A TRAIN A POWER DISTRIBUTION
AC48254A – 032	MAIN CONTROL PANEL PNL-0001A TRAIN A ENCLOSURE EXTERIOR LAYOUT
AC48254A – 033	MAIN CONTROL PANEL PNL-0001B TRAIN B COVER SHEET

Drawing No.	Title
AC48254A – 034	MAIN CONTROL PANEL PNL-0001B TRAIN B POWER DISTRIBUTION
AC48254A – 035	MAIN CONTROL PANEL PNL-0001B TRAIN B ENCLOSURE EXTERIOR LAYOUT
AC48254A – 036	OUTPUT PNL-0002A TRAIN A COVER SHEET
AC48254A – 037	OUTPUT PANEL PNL-0002A TRAIN A POWER DISTRIBUTION
AC48254A – 038	OUTPUT PANEL PNL-0002A TRAIN A ENCLOSURE EXTERIOR LAYOUT
AC48254A – 039	OUTPUT PANEL PNL-0002B TRAIN B COVER SHEET
AC48254A – 040	OUTPUT PANEL PNL-0002B TRAIN B POWER DISTRIBUTION
AC48254A – 041	OUTPUT PANEL PNL-0002B TRAIN B ENCLOSURE EXTERIOR LAYOUT
AC48254A – 042	P/S MONITOR PANEL PNL-0003A TRAIN A COVER SHEET
AC48254A – 043	P/S MONITOR PANEL PNL-0003A TRAIN A POWER DISTRIBUTION
AC48254A – 044	P/S MONITOR PANEL PNL-0003A TRAIN A ENCLOSURE EXTERIOR LAYOUT
AC48254A – 045	P/S MONITOR PANEL PNL-0003B TRAIN B COVER SHEET
AC48254A – 046	P/S MONITOR PANEL PNL-0003B TRAIN B POWER DISTRIBUTION
AC48254A – 047	P/S MONITOR PANEL PNL-0003B TRAIN B ENCLOSURE EXTERIOR LAYOUT
AC48254A – 048	REPEATER PANEL PNL-0004A TRAIN A COVER SHEET
AC48254A – 049	REPEATER PANEL PNL-0004A TRAIN A POWER DISTRIBUTION
AC48254A – 050	REPEATER PANEL PNL-0004A TRAIN A ENCLOSURE EXTERIOR LAYOUT
AC48254A – 051	REPEATER PANEL PNL-0004B TRAIN B COVER SHEET
AC48254A – 052	REPEATER PANEL PNL-0004B TRAIN B POWER DISTRIBUTION
AC48254A – 053	REPEATER PANEL PNL-0004B TRAIN B ENCLOSURE EXTERIOR LAYOUT
AC48254A – 054	REMOTE INPUT PANEL PNL-PLC-BA TRAIN A COVER SHEET
AC48254A – 055	REMOTE INPUT PANEL PNL-PLC-BA TRAIN A POWER DISTRIBUTION
AC48254A – 056	REMOTE INPUT PANEL PNL-PLC-BA TRAIN A ENCLOSURE EXTERIOR LAYOUT
AC48254A – 057	REMOTE INPUT PANEL PNL-PLC-BB TRAIN B COVER SHEET
AC48254A – 058	REMOTE INPUT PANEL PNL-PLC-BB TRAIN B POWER DISTRIBUTION

Drawing No.	Title
AC48254A – 059	REMOTE INPUT PANEL PNL-PLC-BB TRAIN B ENCLOSURE EXTERIOR LAYOUT
AC48254A – 060	REMOTE INPUT PANEL PNL-PLC-CA TRAIN A COVER SHEET
AC48254A – 062	REMOTE INPUT PANEL PNL-PLC-CA TRAIN A ENCLOSURE OVERVIEW
AC48254A – 063	REMOTE INPUT PANEL PNL-PLC-CB TRAIN B COVER SHEET
AC48254A – 065	REMOTE INPUT PANEL PNL-PLC-CB TRAIN B ENCLOSURE OVERVIEW
AC48254A – 066	REMOTE INPUT PANEL PNL-PCL-DA TRAIN A COVER SHEET
AC48254A – 067	REMOTE INPUT PANEL PNL-PLC-DA TRAIN A POWER DISTRIBUTION
AC48254A – 068	REMOTE INPUT PANEL PNL-PLC-DA TRAIN A ENCLOSURE EXTERIOR LAYOUT
AC48254A – 069	REMOTE INPUT PANEL PNL-PLC-DB TRAIN B COVER SHEET
AC48254A – 070	REMOTE INPUT PANEL PNL-PLC-DB TRAIN B POWER DISTRIBUTION
AC48254A – 071	REMOTE INPUT PANEL PNL-PLC-DB TRAIN B ENCLOSURE EXTERIOR LAYOUT
AC48254A – 072	REMOTE INPUT PANEL PNL-PLC-EA TRAIN A COVER SHEET
AC48254A – 074	REMOTE INPUT PANEL PNL-PLC-DA TRAIN A ENCLOSURE EXTERIOR LAYOUT
AC48254A – 075	REMOTE INPUT PANEL PNL-PLC-EB TRAIN B COVER SHEET
AC48254A – 077	REMOTE INPUT PANEL PNL-PLC-EB TRAIN B ENCLOSURE EXTERIOR LAYOUT
AC48254A – 078	REMOTE INPUT PANEL PNL-PLC-FA TRAIN A COVER SHEET
AC48254A – 080	REMOTE INPUT PANEL PNL-PCL-FA TRAIN A ENCLOSURE EXTERIOR LAYOUT
AC48254A – 081	REMOTE INPUT PANEL PNL-PLC-FB TRAIN B COVER SHEET
AC48254A – 083	REMOTE INPUT PANEL PNL-PLC-FB TRAIN B ENCLOSURE EXTERIOR LAYOUT
AC48254A – 084	REMOTE INPUT PANEL PNL-PLC-HA TRAIN A COVER SHEET
AC48254A – 085	REMOTE INPUT PANEL PNL-PLC-HA TRAIN A POWER DISTRIBUTION
AC48254A – 086	REMOTE INPUT PANEL PNL-PLC-HA TRAIN A ENCLOSURE EXTERIOR LAYOUT
AC48254A – 087	REMOTE INPUT PANEL PNL-PLC-HB TRAIN B COVER SHEET
AC48254A – 088	REMOTE INPUT PANEL PNL-PLC-HB TRAIN B POWER DISTRIBUTION
AC48254A – 089	REMOTE INPUT PANEL PNL-PLC-HB TRAIN B ENCLOSURE EXTERIOR LAYOUT
AC48254A – 090	REMOTE INPUT PANEL PNL-PLC-IA TRAIN A COVER SHEET

Drawing No.	Title
AC48254A – 092	REMOTE INPUT PANEL PNL-PLC-IA TRAIN A ENCLOSURE EXTERIOR LAYOUT
AC48254A – 093	REMOTE INPUT PANEL PNL-PLC-IB TRAIN B COVER SHEET
AC48254A – 095	REMOTE INPUT PANEL PNL-PLC-IB TRAIN B ENCLOSURE EXTERIOR LAYOUT
AC48254A – 096	REMOTE INPUT PANEL PNL-PLC-JA TRAIN A COVER SHEET
AC48254A – 098	REMOTE INPUT PANEL PNL-PLC-JA TRAIN A ENCLOSURE EXTERIOR LAYOUT
AC48254A – 099	REMOTE INPUT PANEL PNL-PLC-JB TRAIN B COVER SHEET
AC48254A – 101	REMOTE INPUT PANEL PNL-PLC-JB TRAIN B ENCLOSURE EXTERIOR LAYOUT
AC48254A – 102	REMOTE INPUT PANEL PNL-PLC-KA TRAIN A COVER SHEET
AC48254A – 103	REMOTE INPUT PANEL PNL-PLC-KA TRAIN A POWER DISTRIBUTION
AC48254A – 104	REMOTE INPUT PANEL PNL-PLC-KA TRAIN A ENCLOSURE EXTERIOR LAYOUT
AC48254A – 105	REMOTE INPUT PANEL PNL-PLC-KB TRAIN B COVER SHEET
AC48254A – 106	REMOTE INPUT PANEL PNL-PLC-KB TRAIN B POWER DISTRIBUTION
AC48254A – 107	REMOTE INPUT PANEL PNL=PLC-KB TRAIN B ENCLOSURE EXTERIOR LAYOUT
AC48254A – 108	REMOTE INPUT PANEL PNL-PLC-LA TRAIN A COVER SHEET
AC48254A – 110	REMOTE INPUT PANEL PNL-PLC-LA TRAIN A ENCLOSURE EXTERIOR LAYOUT
AC48254A – 111	REMOTE INPUT PANEL PNL-PLC-LB TRAIN B COVER SHEET
AC48254A – 113	REMOTE INPUT PANEL PNL-PLC-LB TRAIN B ENCLOSURE EXTERIOR LAYOUT
AC48254A – 114	TEMPERATURE MONITORING PLC SYSTEM CONTROLNET COMMS DIAGRAM COVER SHEET
AC48254A – 115	TEMPERATURE MONITORING PLC SYSTEM TRAIN A CONTROLNET WIRING DIAGRAM
AC48254A – 116	TEMPERATURE MONITORING PLC SYSTEM CONTROLNET COMMS DIAGRAM COVER SHEET
AC48254A – 117	TEMPERATURE MONITORING PLC SYSTEM TRAIN B CONTROLNET WIRING DIAGRAM
AC48254A – 120	SITE STORAGE AND HANDLING INSTRUCTIONS – TEMPERATURE MONITORING PLC SYSTEM
AC48254A-061	REMOTE INPUT PANEL PNL-PLC-CA TRAIN A POWER DISTRIBUTION
AC48254A-064	REMOTE INPUT PANEL PNL-PLC-CB TRAIN B POWER DISTRIBUTION

Drawing No.	Title
AC48254A-073	REMOTE INPUT PANEL PNL-PLC-EA TRAIN A POWER DISTRIBUTION
AC48254A-076	REMOTE INPUT PANEL PNL-PLC-EB TRAIN B POWER DISTRIBUTION
AC48254A-079	REMOTE INPUT PANEL PNL-PLC-FA TRAIN A POWER DISTRIBUTION
AC48254A-082	REMOTE INPUT PANEL PNL-PLC-FB TRAIN B POWER DISTRIBUTION
AC48254A-091	REMOTE INPUT PANEL PNL-PLC-IA TRAIN A POWER DISTRIBUTION
AC48254A-094	REMOTE INPUT PANEL PNL-PLC-IB TRAIN B POWER DISTRIBUTION
AC48254A-097	REMOTE INPUT PANEL PNL-PLC-JA TRAIN A POWER DISTRIBUTION
AC48254A-100	REMOTE INPUT PANEL PNL-PLC-JB TRAIN B POWER DISTRIBUTION
AC48254A-109	REMOTE INPUT PANEL PNL-PLC-LA TRAIN A POWER DISTRIBUTION
AC48254A-112	REMOTE INPUT PANEL PNL-PLC-LB TRAIN B POWER DISTRIBUTION
AC48254A-121	J-SK-INPUT/OUTPUT LIST – PLC CONTROL LOGIX I/O LIST

The following drawings are associated with SDU 2.

Drawing No.	Title
AC46724A	Vendor Document Package for the Vent Skids (96 Sheets)
AC48254A	Vendor Documentation Package for Temperature Monitoring PLCN (127 Sheets)
AC51636A	Concrete Development and Testing Submittals
C-C2-Z-00001	Z-AREA SALT STONE DISPOSAL SITE VAULT #2 GENERAL NOTES
C-CC-Z-00032	CBU - SALTSTONE STORAGE VAULT NO. 2 VALVE BOX SHIELDING FOR DRAINWATER RETURN LINE PLAN, SECTIONS AND DETAILS
C-CG-Z-00021	Z-AREA SALTSTONE DISPOSAL SITE VAULT #2 VICINITY MAP AND DRAWING INDEX (U)
C-CG-Z-00022	Z-AREA SALTSTONE DISPOSAL SITE VAULT #2 SITE CLERING & EROSION CONTROL PLAN
C-CG-Z-00023	Z-AREA SALTSTONE DISPOSAL SITE VAULT #2 SEDIMENTATION BASIN PLAN AND SECTIONS (U)
C-CG-Z-00024	Z-AREA SALTSTONE DISPOSAL SITE VAULT #2 MISCELLANEOUS DETAILS EROSION AND SEDIMENT CONTROL (U)
C-CG-Z-00025	Z-AREA SALTSTONE DISPOSAL SITE MISCELLANEOUS DETAILS (U)

C-CG-Z-00026	Z-AREA VAULT #2 OVERALL SITE PLAN
C-CG-Z-00027	Z-AREA SALTSTONE DISPOSAL SITE VAULT #2 EXCAVATION AND STOCKPILE PLAN
C-CG-Z-00028	Z-AREA SALTSTONE DISPOSAL SITE VAULT #2 EXCAVATION AND STOCKPILE CROSS SECTIONS
C-CG-Z-00029	Z-AREA SALTSTONE DISPOSAL SITE VAULT #2 EXCAVATION SECTIONS AND DETAILS
C-CG-Z-00030	Z-AREA SALTSTONE DISPOSAL SITE VAULT #2 FINISH GRADING PLAN
C-CG-Z-00031	Z-AREA SALTSTONE DISPOSAL SITE VAULT #2 FINISH GRADE CROSS SECTIONS & DETAILS
C-CG-Z-00032	Z-AREA SALTSTONE DISPOSAL SITE VAULT NO. 2
C-CH-Z-00012	CBU - SALTSTONE STORAGE VAULT NO.2 GROUT FILL LINE SHIELDING PLAN, SECTIONS AND DETAILS (U)
C-CH-Z-00014	CBU SALTSTONE STORAGE VAULT 2 DRAIN WATER COLLECTION SYSTEM PIPING ARRANGEMENT AND PIPE SUPPORT
C-CH-Z-00015	CBU - SALTSTONE STORAGE VAULT NO.2 DRAINWATER RETURN LINE PIPE SUPPORT PLAN SECTIONS AND DETAILS
C-CH-Z-00021	CBU SALTSTONE STORAGE VAULT NO.2 SALSTONE FACILITY VAULT 2A AND 2B VENTILATION DUCT AND EQUIPMENT SUPPORTS DETAILS AND SECTIONS
C-CH-Z-00022	CBU-WASTE SOLIDIFICATION PROJECTS SALTSTONE FACILITY VAULT #2 / VAULT #4 GROUT LINE TIE-IN AND 3 WAY VALVE SHIELDING & SUPPORTS PLANS, SECTIONS & DETAILS
C-CH-Z-00023	VAULT 2 GROUT LINE SUPPORT LOCATIONS AND DETAILS
C-CI-Z-00001	Vault 2A and 2B, CCTV, T/C and Lighting, Equipment Supports, Plan and Sections
C-CI-Z-00002	CBU - SALTSTONE STORAGE VAULT NO. 2 SALTSTONE FACILITY VAULT 2A & 2B ELECTRICAL EQUIPMENT SUPPORT & FOUNDATION PAD #1 DETAILS, PLAN & SECTIONS
C-CI-Z-00003	ELECTRICAL EQUIPMENT SUPPORT & FOUNDATION PAD #2 DETAILS, PLAN & SECTIONS
C-CI-Z-00004	CBU SALTSTONE STORAGE VAULT #2 SALTSTONE FACILITY VAULT 2A AND 2B ELECRICAL EQUIPMENT SUPPORT & FOUNDATION PAD #3 DETAILS PLAN 8 SECTIONS
C-CI-Z-00005	INTERIM DRAWING TO E-DCP-Z-06001, REV 2
E-E1-Z-00006	CBU WASTE SOLIDIFICATION PROJECTS SALTSTONE FACILITY VAULT 2, POLE DETAILS - PLAN, SECTIONS AND SCHEDULE ELECTRICAL
E-E1-Z-00007	CBU WASTE SOLIDIFICATION PROJECTS SALTSTONE FACILITY, VAULT 2, 13.8KV OVERHEAD LINE BILL OF MATERIAL ELECTRICAL (U)
E-E2-Z-00021	CBU - WASTE SOLIDIFICATION PROJECT SALTSTONE FACILITY VAULT 2A AND VAULT 2B MAIN SINGLE LINE DIAGRAM ELECTRICAL (U)
E-E4-Z-00084	CBU - WASTE SOLIDIFICATION PROJECT SALTSTONE FACILITY VAULT #2A DRAINWATER COLLECTION AND RETURN SYSTEM PUMP #1 Z-451002-SSD-P-0001 SCHEMATIC DIAGRAM ELECTRICAL
E-E4-Z-00085	CBU - WASTE SOLIDIFICATION PROJECT SALTSTONE FACILITY VAULT #2B DRAINWATER COLLECTION AND RETURN SYSTEM PUMP #2 Z-451001-SSD-P-0002 SCHEMATIC DIAGRAM ELECTRICAL (U)
E-E4-Z-00086	CBU-WASTE SOLIDIFICATION PROJECT SALTSTONE FACILITY VAULT 2 DRAINWATER RETURN LINE VALVES MOV-2100 SCHEMATIC DIAGRAM ELECTRICAL
E-E4-Z-00087	Drain Water Return Line Valves MOV-2200 Schematic Diagram

E-E4-Z-00088	CBU WASTE SOLIDIFICATION PROJECT SALTSTONE FACILITY VAULT 4 DRAINWATER RETURN LINE VALVES MOV-2101 SCHEMATIC DIAGRAM
E-E4-Z-00089	C B U WASTE SOLIDIFICATION PROJECT SALTSTONE FACILITY VAULT 4 DRAINWATER RETURN LINE VALVES MOV-2102 SCHEMATIC DIAGRAM ELECTRICAL (U)
E-E4-Z-00090	CBU WASTE SOLIFICATION PROJECT SALTSTONE FACILITY VAULT 4 DRAINWATER COLLECTION AND RETURN SYSTEM LEAK DETECTION SYSTEM - LSH-2000 SCHEMATIC DIAGRAM
E-E9-Z-00005	INTERIM DRAWING FOR DCP NUMBER: E-DCP-Z-06001, REV 2
E-EB-Z-00009	INTERIM DRAWING FOR DCP NUMBER: E-DCP-Z-06001, REV 2
E-EB-Z-00011	CBU WASTE SOLIDIFICATION PROJECTS SALTSTONE FACILITY VAULT 2 PANELBOARD AND MISCELLANEOUS SYSTEMS Z-451002-ELNH-PNL-0201, ELLV-PNL-0001 CABLE BLOCK DIAGRAM ELECTRICAL
E-EC-Z-00004	COORDINATION CURVE DRAWING FOR VAULT #2A & 2B SERVICE
E-EG-Z-00008	CBU WASTE SOLIDIFICATION PROJECTS SALTSTONE VAULTS 2A AND 2B - PAD 1 AND PAD 2 GROUNDING DETAILS ELECTRICAL (U)
E-EG-Z-00009	CBU WASTE SOLIDIFICATION PROJECTS SALTTONE VAULTS 2A AND 2B PAD 3 GROUNDING DETAILS (U) ELECTRICAL
E-EP-Z-00010	C B U WASTE SOLIDIFICATION PROJECT SALTSTONE FACILITY VAULT 2 DRAINWATER RETURN AND COLLECTION SYSTEM PUMP STARTER PANEL LAYOUT Z-451002-SSD-CSTR-0001 AND 0002 ELECTRICAL
E-EP-Z-00011	CBU WASTE SOLIDIFICATION PROJECT SALTSTONE FACILITY VAULT 2 DRAINWATER COLLECTION SYSTEM - MOVS STARTER PANEL LAYOUT DETAILS Z-451002-SSD-MSTR-2100 AND -2200 ELECTRICAL
E-EP-Z-00012	C B U WASTE SOLIDIFICATION PROJECT SALTSTONE FACILITY VAULT 4 DRAINWATER COLLECTION SYSTEM - MOV'S STARTER PANEL LAYOUT DETAILS Z-451004-SSD-MSTR-2101 AND -2102 ELECTRICAL
E-EP-Z-00013	CBU-WASTE SOLIDIFICATION PROJECTS SALTSTONE FACILITY VAULT 2 480V VAULT 2 POWER DISTRIBUTION PANELBOARD ELECTRICAL BILL OF MATERIALS 480 V POWER RECEPTACLE DETAILS ELECTRICAL (U)
E-ER-Z-00015	CBU WASTE SOLIDIFICATION PROJECTS SALTSTONE VAULTS 2A AND 2B VAULT 2A/2B EQUIPMENT AND RACEWAY PLAN AND PADS 1 AND 3 LOCATIONS ELECTRICAL
E-ER-Z-00016	CBU WASTE SOLIDIFICATION PROJECTS SALTSTONE VAULTS 2A AND 2B PAD NO. 1 EQUIPMENT LOCATION AND RACEWAY PLAN
E-ER-Z-00017	CBU WASTE SOLIDIFICATION PROJECTS SALTSTONE VAULT 4 PAD NO. 2 EQUIPMENT LOCATION AND RACEWAY PLAN ELECTRICAL (U)
E-ER-Z-00018	CBU WASTE SOLIDIFICATION PROJECTS SALTSTONE VAULTS 2A AND 2B ORGANIC MODS PAD NO. 3 EQUIPMENT LOCATION AND RACEWAY PLAN (U) ELECTRICAL
E-ES-Z-00012	INTERIM FOR E-DCP-Z-06001, REV 2
E-EW-Z-00013	Trains A and B Temperature Monitoring Wiring Diagram
E-EY-Z-00003	INTERIM DRAWING FOR DCP NUMBER: E-DCP-Z-09001
E-EY-Z-00004	VAULT 2A AND 2B OVERHEAD LINE PLOT PLAN, 13.8KV, 480V AND COMMUNICATION PLAN, ELECTRICAL
E-EY-Z-0002	INTERIM TO E-DCP-Z-06001/ 0.2 CURIES PER GALLON SALTSTONE MODIFICATION PROJECT OVERHEAD PLOT PLAN 13.8KV AND COMMUNICATION
J-J2-Z-00029	WASTE SOLIDIFICATION PROJECTS SALTSTONE FACILITY VAULT #4 ORGANIC

	MODIFICATION CELLS B THRU H, TRAINS A & B CONTROL LOGIC DIAGRAM
J-J2-Z-00032	INTERIM DRAWING FOR DCP NUMBER: J-DCP-Z-09002
J-J4-Z-00040	CBU WASTE SOLIDIFICATION PROJECTS SALTSTONE FACILITY 0.2 CI/GAL SALTSTONE MODIFICATION PROJECT 210-Z PROCESS ROOM & SFT CCTV CONNECTION & CABLE BLOCK DIAGRAMS (U)
J-J4-Z-00052	INTERIM TO E-DCP-Z-06001, REV 2
J-J4-Z-00053	INTERIM DRAWING FOR DCP NUMBER: E-DCP-Z-06001, REV 2
J-J4-Z-00072	High Temperature Interlock Control Schematic Diagram
J-J4-Z-00078	WASTE SOLIDIFICATION PROJECTS SALTSTONE FACILITY TI-7201A TO TI-7210A VAULT 4 CELL B, C, D, E, F, H, I, J, K, L TRAIN A TEMP MONITORING LOOP DIAGRAM
J-J4-Z-00079	WASTE SOLIDIFICATION PROJECTS SALTSTONE FACILITY TI-7201B TO TI-7210B VAULT 4 CELL B, C, D, E, F, H, I, J, K, L TRAIN B TEMP MONITORING LOOP DIAGRAM
J-J4-Z-00084	INTERIM DRAWING FOR DCP NUMBER: J-DCP-Z-09002
J-J4-Z-00085	VAULT NO. 2 SALTSTONE Z-AREA VENTILATION SYSTEM LOOP DIAGRAM
J-J4-Z-00086	WASTE SOLIDIFICATION PROJECTS SALTSTONE FACILITY TE 2131-01A TO TE 2131-23A VAULT 2A - TRAIN A TEMP MONITORING LOOP DIAGRAM
J-J4-Z-00087	WASTE SOLIDIFICATION PROJECTS SALTSTONE FACILITY TE 2131-01B TO TE 2131-23B VAULT 2A - TRAIN B TEMP MONITORING LOOP DIAGRAM
J-J4-Z-00088	WASTE SOLIDIFICATION PROJECTS SALTSTONE FACILITY TE 2141-01A TO 2141-23A VAULT 2B - TRAIN A TEMP MONITORING LOOP DIAGRAM
J-J4-Z-00089	WASTE SOLIDIFICATION PROJECTS SALTSTONE FACILITY TE 2141-01B TO TE 2141-23B VAULT 2B - TRAIN B TEMP MONITORING LOOP DIAGRAM
J-J5-Z-00009	WASTE SOLIDIFICATION PROJECT SALTSTONE FACILITY VAULT 2 ORGANIC MODS TRAINS A, B, & C THERMOCOUPLE TREE FABRICATION AND INSTALLATION DETAILS INSTRUMENTATION
J-J8-Z-00002	INTERIM TO E-DCP-Z-06001, REV 2 (FFB Segment)
J-J8-Z-00003	INTERIM TO E-DCP-Z-06001, REV 2 (FFB Segment)
J-J8-Z-00004	INTERIM TO E-DCP-Z-06001, REV 2 (FFB Segment)
J-J8-Z-00009	CBU-WASTE SOLIDIFICATION PROJECTS SALTSTONE FACILITY VAULT 4 DRAIN WATER COLLECTION SYSTEM FIELDBUS SEGMENT DRAWING
J-J8-Z-00010	CBU-WASTE SOLIDIFICATION PROJECTS SALTSTONE FACILITY VAULT 2 DRAINWATER COLLECTION SYSTEM FIELDBUS SEGMENT DRAWING
J-J8-Z-00011	INTERIM DRAWING FOR DCP NUMBER: J-DCP-Z-09002
J-J8-Z-00012	INTERIM DRAWING FOR DCP NUMBER: J-DCP-Z-09002
J-J8-Z-00013	VAULT 2 SALTSTONE VENTILATION SYSTEM FOUNDATION FIELDBUS SEGMENT
J-JC-Z-0001	SRS-200Z AREA DEFENSE WASTE PROCESSING FACILITY SALTSTONE SALTSTONE PROCESS BUILDING I/O CABINET 1 PANEL LAYOUT
J-JL-Z-00009	WASTE SOLIDIFICATION PROJECTS SALTSTONE FACILITY VAULT #4 TRAINS A AND B TEMPERATURE AND ALARM PANELS
J-JL-Z-00011	WASTE SOLIDIFICATION PROJECTS SALTSTONE FACILITY VAULT 2 DRAIN WATER MODIFICATION PANEL LAYOUT Z-451002-DCS-PNL-0001
J-JL-Z-00012	WASTE SOLIDIFICATION PROJECTS SALT STONE FACILITY VAULT 4 DRAIN WATER MODIFICATION PANEL LAYOUT Z-451004-DCS-PNL-0002
J-JL-Z-00013	INTERIM DRAWING FOR DCP NUMBER: J-DCP-Z-09002
J-JL-Z-00014	INTERIM DRAWING FOR DCP NUMBER: J-DCP-Z-09002
J-JL-Z-00015	INTERIM DRAWING FOR DCP NUMBER: J-DCP-Z-09002
J-JL-Z-00016	INTERIM DRAWING FOR DCP NUMBER: J-DCP-Z-09002

J-JL-Z-00017	WASTE SOLIDIFICATION PROJECT SALTSTONE FACILITY VAULT 2A - T/C PANEL LAYOUT
J-JL-Z-00018	VAULT #2B , TRAIN C PANEL LAYOUT ENCLOSURE
J-JL-Z-00019	WASTE SOLIDIFICATION PROJECTS SALTSTONE FACILITY VAULT 2 ORGANIC MODS, VLT 2A & 2B, TRAINS A, B THERMOCOUPLES TERMINAL BOX, INSTRUMENTATION
J-JL-Z-00020	WASTE SOLIDIFICATION PROJECTS SALTSTONE FACILITY SSD-PNL-0006A VAULT 2-TRAIN A REPEATER PANEL ENCLOSURE OVERVIEW
J-JL-Z-00021	WASTE SOLIDIFICATION PROJECTS SALTSTONE FACILITY SSD-PNL-0006B VAULT 2-TRAIN B REPEATER PANEL ENCLOSURE OVERVIEW
J-JL-Z-00022	WASTE SOLIDIFICATION PROJECTS SALTSTONE FACILITY SSD-PNL-0005A VAULT 2-TRAIN A 210-Z REPEATER PANEL ENCLOSURE OVERVIEW
J-JL-Z-00023	WASTE SOLIDIFICATION PROJECT SALSTONE FACILITY SSD-PNL-V2 VAULT NO. 2 VENTILATION PANEL LAYOUT ENCLOSURE
J-JL-Z-00024	WASTE SOLIDIFICATION PROJECTS SALTSTONE FACILITY SSD-PNL-0005B VAULT 2-TRAIN B 210Z REPEATER PANEL ENCLOSURE OVERVIEW
J-JQ-Z-0001	SALTSTONE FACILITY DELTA V CONTROL SYSTEM I/O CABINET #1 CONNECTION DIAGRAM (U)
J-JQ-Z-00013	Vault 4 Organic Mods, PLC Network Communication and Wiring Train A
J-JQ-Z-00014	Vault 4 Organic Mods, PLC Network Communication and Wiring Train B
J-JQ-Z-00019	CBU-WASTE SOLIDIFICATION PROJECTS SALTSTONE FACILITY SALTSTONE VAULT NO. 2 H1 CARD INTERFACE WITH FOUNDATION FIELDBUS SEGMENT
J-JQ-Z-00020	INTERIM DRAWING FOR DCP NUMBER: J-DCP-Z-09002
J-JQ-Z-00021	INTERIM DRAWING FOR DCP NUMBER: J-DCP-Z-09002
J-JQ-Z-00022	INTERIM DRAWING FOR DCP NUMBER: J-DCP-Z-09002
J-JQ-Z-00023	INTERIM DRAWING FOR DCP NUMBER: J-DCP-Z-09002
J-JQ-Z-00024	WASTE SOLIDIFICATION PROJECTS SALTSTONE FACILITY VAULT 2 TRAIN A REPEATER PANEL PNL-0006A PLC NETWORK WIRING
J-JQ-Z-00025	WASTE SOLIDIFICATION PROJECTS SALTSTONE FACILITY VAULT 2 TRAIN B REPEATER PANEL PNL-0006B PLC NETWORK WIRING
J-JQ-Z-00026	WASTE SOLIDIFICATION PROJECTS SALTSTONE FACILITY VAULT 2 TRAIN A 210-Z REPEATER PANEL PNL-0005A PLC NETWORK WIRING
J-JQ-Z-00027	WASTE SOLIDIFICATION PROJECTS SALTSTONE FACILITY VAULT 2 - TRAIN B 210-Z REPEATER PANEL PNL-0005B PLC NETWORK WIRING
J-JQ-Z-00028	210Z REPEATER PANEL - PLC NETWORK WIRING
J-JZ-Z-00026	Leachate Transfer Flow (Z201-ZZZF-1002)
J-JZ-Z-00057	INSTRUMENT SCALING AND SETPOINT DOCUMENT Z451-ZZZT-2121 VAULT 2A CELL A THERMOCOUPLE TREE #1 TEMPERATURE
J-JZ-Z-00061	INSTRUMENT SCALING AND SETPOINT DOCUMENT Z451-ZZZT-2221 VAULT 2B CELL B THERMOCOUPLE TREE #1 TEMPERATURE
J-JZ-Z-00099	SALTSTONE INSTRUMENT SCALING AND SETPOINT DOCUMENT, Z451-ZZZF-0027, VAULT 4 EAST SIDE VENTELATION FLOW METER
J-JZ-Z-00101	SALTSTONE INSTRUMENT SCALING AND SETPOINT DOCUMENT, Z451-ZZZP-0026, SALTSTONE VAULT 2 VENTILATION SKID FILTER DIFFERENTIAL PRESSURE
J-JZ-Z-00111	VAULT 2A DRAINWATER LEVEL

J-JZ-Z-00112	VAULT 2B DRAINWATER LEVEL
J-JZ-Z-00114	Vault 2 Cell 2A Train A Thermocouple Tree Temperature
J-JZ-Z-00115	Vault 2 Cell 2B Train A Thermocouple Tree Temperature
J-JZ-Z-00116	Vault 2 Cell 2A Train B Thermocouple Tree Temperature
J-JZ-Z-00117	Vault 2 Cell 2B Train B Thermocouple Tree Temperature
J-JZ-Z-00118	SALTSTONE INSTRUMENT SCALING AND SETPOINT DOCUMENT Z451-ZZZF-2172 SALTSTONE VAULT 2 CELL 2A VENTILATION FLOW METER
J-JZ-Z-00119	SALTSTONE INSTRUMENT SCALING AND SETPOINT DOCUMENT Z451-ZZZF-2173 SALTSTONE VAULT 2 CELL 2B VENTILATION FLOW METER
K-PT-Z-00001	Z AREA SALTSTONE VAULT #2A & 2B LYSIMETER WELL INSTALLATION PLAN
M-M6-Z-00100	CBU - WASTE SOLIDIFICATION PROJECTS SALTSTONE FACILITY SALTSTONE STORAGE STRUCTURES VAULT #2 PIPING AND INSTRUMENTATION DIAGRAM
M-M6-Z-00114	INTERIM DRAWING FOR DCP NUMBER: J-DCP-Z-09002 (train A and B T/C)
M-M6-Z-00115	SALTSTONE VAULTS 2A AND 2B VENTILATION SYSTEM PROCESS AND INSTRUMENT DIAGRAM
M-M6-Z-0095	O.2 CI/GAL LOW CURIE SALT MODIFICATION VAULT/LEACHATE COLLECTION SYSTEM PIPING & INSTRUMENTATION DIAGRAM
P-PA-Z-00017	CBU - SALTSTONE STORAGE VAULT #2 3" GROUT FILL LINE AND 2" DRAINWATER RETURN LINE PIPING ARRANGEMENT
P-PA-Z-00018	CBU - WASTE SOLIDIFICATION PROJECTS SALTSTONE FACILITY SALTSTONE STORAGE STRUCTURES VAULT #2 ROOF VENT DETAILS
P-PA-Z-0008	WASTE SOLIDIFICATION PROJECTS SALTSTONE FACILITY SALT FEED TANK PIPING SHEET 1 OF 4
P-PA-Z-0013	C B U WASTE SOLIDIFICATION PROJECTS SALTSTONE FACILITY 0.2 CI/GAL SALTSTONE MODIFICATION PROJECT YARD PIPING
P-PH-Z-00004	SRS 200-Z AREA SALTSTONE DISPOSAL SITE SALTSTONE VAULT 2A PORTABLE VENTILATION SYSTEM, EQUIPMENT & PIPING ARRGT, PLAN, SECTIONS & DETAILS
P-PH-Z-00005	SRS 200-Z AREA SALTSTONE DISPOSAL SITE DALTSTONE VAULT 2B PORTABLE VENTILATION SYSTEM, EQUIPMENT & PIPING ARRGT, PLAN, SECTIONS & DETAILS
P-PI-Z-00001	Isometric – 3" Grout Line SAP27-P254-3"
P-PI-Z-0003	0.2C1/GAL LOW CURIE SALT MODS. ISOMETRIC - 3" VAULT DRAINWATER RETURN SSD2-P224-3", JACKET - P51A-6"
P-PM-Z-00019	CBU - WASTE SOLIDIFICATION PROJECTS SALTSTONE FACILITY SALTSTONE STORAGE STRUCTURES VAULT 2 DRAIN WATER RETURN DISCHARGE PUMP MOUNTING PLAN, ELEVATION, AND DETAILS
WB00001K	Vendor Document Package for the Vault 2 Cells (54 Sheets)

The following drawings are associated with SDU 3 & 5.

Drawing No.	Title
C-CC-Z-00054	SDU 3&5, MISCELLANEOUS CONCRETE FOUNDATIONS, PLAN, SECTIONS AND DETAILS
C-CG-Z-00025	Z-AREA SALTSTONE DISPOSAL SITE MISCELLANEOUS DETAILS (U)
C-CG-Z-00026	Vault 2 - Overall Site Plan
C-CG-Z-00037	CBU - SALTSTONE STORAGE CELLS NO.3 & 5 MUDMAT MARKERS CELLS 3 & 5 SECTIONS & DETAILS (U)

Drawing No.	Title
C-CG-Z-00038	CBU - SALTSTONE STORAGE CELLS NO.3 & 5 SETTLEMENT MARKERS CELLS 3 & 5 SECTIONS & DETAILS (U)
C-CG-Z-00067	Saltstone Disposal Site SDU 3&5 Balance of Plant 13.8 kV Direct Buried Line Location Plan and Profile
C-CG-Z-00068	Z-AREA SALTSTONE DISPOSAL CELLS 3 & 5 GRADING PLAN
C-CG-Z-00069	Z-AREA SALTSTONE DISPOSAL CELLS 3 & 5 POST CONSTRUCTION SURFACE STABILIZATION PLAN
C-CG-Z-00070	Z-AREA SALTSTONE DISPOSAL CELLS 3 & 5 GRADING DETAILS AND SECTIONS
C-CH-Z-00019	CBU - SALTSTONE STORAGE DISPOSAL CELLS 3A & 3B DRAIN WATER COLLECTION SYSTEM PIPING ARRANGEMENT AND PIPE SUPPORT
C-CH-Z-00020	SALTSTONE STORAGE DISPOSAL CELLS #5A & 5B, DRAIN WATER COLLECTION SYSTEM PIPING ARRANGEMENT AND PIPE SUPPORT
C-CH-Z-00024	Z-AREA SALTSTONE DISPOSAL CELLS 3 & 5, GROUT & DRAIN LINE PIPING SUPPORTS GENERAL ARRANGEMENT PLAN
C-CH-Z-00025	SALTSTONE DISPOSAL SITE CYLINDRICAL DISPOSAL CELLS #3 & #5 GROUT & DRAIN LINE PIPING SUPPORTS - SUPPORT DETAILS & SECTIONS
C-CH-Z-00026	Z-AREA SALTSTONE DISPOSAL CELLS 3 & 5, GROUT & DRAIN LINE PIPING SUPPORTS ENLARGED PLAN, SECTIONS & DETAILS
C-CI-Z-00007	Cells 3/5, Pad 4 Elect Equip Support and Foundation
C-CI-Z-00008	Cells 3/5, Pad 5 Elect Equip Support and Foundation
C-CX-Z-00003	Saltstone Disposal Site, Cylindrical Disposal Cells, General Arrangement Plan
C-CX-Z-00004	Saltstone Disposal Site, Cylindrical Disposal Cells, General Arrangement Plan
E-E1-Z-00008	SDU 3/5, Overhead Pole Details
E-E1-Z-00009	SDU 3/5, Overhead Pole Bill of Material
E-E1-Z-00011	INTERIM DRAWING FOR DCP NUMBER: E-DCP-Z-12003
E-E1-Z-00012	Cells 3/5 and Vault 2 Area, Overhead Pole Bill of Material
E-E2-Z-00023	SDU 3/5, Main Single Line Diagram
E-E4-Z-00103	Cell 3A, Drainwater Pump, P-0001, Schematic
E-E4-Z-00104	Cell 3B, Drainwater Pump, P-0002, Schematic
E-E4-Z-00105	Cell 5A, Drainwater Pump, P-0001, Schematic
E-E4-Z-00106	Cell 5B, Drainwater Pump, P-0002, Schematic
E-E6-Z-00003	Z-AREA SALTSTONE FACILITY SALTSTONE DISPOSAL UNIT SDU 3A, 3D, 5A AND 5B HAZARDOUS AREA CLASSIFICATION ELECTRICAL
E-E8-Z-00003	SDU 3/5 GREENFIELD PDMS CARD STATUS REPORT
E-EB-Z-00012	SDU 3/5, Fiber Optic Cable Block Diagram
E-EB-Z-00014	Z-451005-ELNH-PNL-0001 Cable Block Diagram
E-EB-Z-00015	SDU 3/5, Panels ELLV-PNL-0001, -0002, -0003 Cable Block Diagrams
E-EC-Z-00005	Coordination Curves Drawing for SDSU 3 & 5 Service
E-EF-Z-00004	SDU 3/5 Public Address (PA) System Equipment and Raceway Plan Interim Drawing for E-DCP-Z-13001
E-EG-Z-00012	SDU 3, Pad 5 Grounding Details
E-EG-Z-00013	SDU 5, Pad 4 Grounding Details

Drawing No.	Title
E-EP-Z-00020	SDU 3/5, Miscellaneous Electrical BOM and Box Supports
E-EP-Z-00021	SDU 3/5, Drainwater Pump Starter Panel Layout and BOM, Z-451005-SSD-CSTR-0001 thru -0004
E-ER-Z-00020	SDU 3, Tray and Raceway Plan
E-ER-Z-00021	SDU 5, Tray and Raceway Plan
E-ER-Z-00022	SDU 5, Pad 4 Equipment Location and Raceway Plan
E-ER-Z-00023	SDU 3, Pad 5 Equipment Location and Raceway Plan
E-ES-Z-00018	SDU 3/5 and Pads 4 and 5, ELLV-PNL-0001, PNL-0002, PNL-0003 and PNL-0004 Panel Schedules
E-ES-Z-00019	SDU 3/5, FUBX-0001 Panel Schedules
E-EY-Z-00005	SDU 3/5 and Vault 2, Poles and Overhead Cables Plan Drawing, 13.8KV, 480 and Communication Plan
J-J4-Z-00040	CBU WASTE SOLIDIFICATION PROJECTS SALTSTONE FACILITY 0.2 CI/GAL SALTSTONE MODIFICATION PROJECT 210-Z PROCESS ROOM & SFT CCTV CONNECTION & CABLE BLOCK DIAGRAMS (U)
J-J4-Z-00090	SALTSTONE MODIFICATION PROJECT VAULT 3A AND 3B CCTV LOOP DIAGRAM (U) CONTROL SYSTEMS
J-J4-Z-00091	SALTSTONE MODIFICATION PROJECT VAULT 5A AND 5B CCTV LOOP DIAGRAM (U) CONTROL SYSTEMS
J-J4-Z-00115	SDU 3 & 5 CCTV SYSTEM CONNECTION & CABLE BLOCK DIAGRAM
J-J5-Z-00012	CELLS 3 &5 ORGANIC MODS, TRAINS A, B & C THERMOCOUPLE TREE FABRICATION AND INSTALLATION DETAILS, INSTRUMENTATION
J-J8-Z-00019	SALTSTONE DISPOSAL CELL #3 Grout Line and Drain Water Collection system FOUNDATION FIELDBUS SEGMENT Drawing
J-J8-Z-00020	SALTSTONE DISPOSAL CELL #5 FOUNDATION FIELDBUS SEGMENT Drawing
J-J8-Z-00023	SALTSTONE DISPOSAL CELL #3 FOUNDATION FIELDBUS SEGMENT Drawing
J-J8-Z-00024	SALTSTONE DISPOSAL CELL #5A FOUNDATION FIELDBUS SEGMENT Drawing
J-J8-Z-00025	SALTSTONE DISPOSAL CELL 3B FOUNDATION FIELDBUS SEGMENT Drawing
J-J8-Z-00026	Saltstone Disposal Cell 5B Train C Thermocouples - Foundation Fieldbus Bus (FFB) Segment Drawing
J-J8-Z-00027	Saltstone Disposal Cell 3 & 5 - Drainwater Collection - ASi Segment Drawing
J-J8-Z-00028	SALTSTONE DISPOSAL CELLS 3 & 5 INSTRUMENT LAYOUT PLAN INSTRUMENT INTERCONNECTION DRAWING FOUNDATION FIELDBUS SEGMENT
J-JL-Z-00030	CELL #3 & 5 Train A - PNL 3AA, 3BA, 5AA & 5BA - ENCLOSURE OVERVIEW MATRIX
J-JL-Z-00034	VAULT 3A, 3B, 5A & 5B ORGANIC MODS - TRAIN A & B T/C TERMINAL BOX
J-JL-Z-00035	WASTE SOLIDIFICATION PROJECTS SALTSTONE FACILITY DISPOSAL SALTSTONE DISPOSAL UNIT 3 INSTRUMENT PANEL LAYOUT Z-451003-DCS-PNL-001
J-JL-Z-00036	WASTE SOLIDIFICATION PROJECTS SALTSTONE FACILITY DISPOSAL SALTSTONE DISPOSAL UNIT 5 INSTRUMENT PANEL LAYOUT Z-451005-DCS-PNL-0001
J-JL-Z-00037	CELL# 3A TRAIN C PANEL LAYOUT ENCLOSURE
J-JL-Z-00038	CELL# 3B TRAIN C PANEL LAYOUT ENCLOSURE
J-JL-Z-00039	CELL# 5A TRAIN C PANEL LAYOUT ENCLOSURE
J-JL-Z-00040	CELL# 5B TRAIN C PANEL LAYOUT ENCLOSURE
J-JL-Z-00054	CBU WASTE SOLIDIFICATION PROJECTS SALTSTON FACILITY FIBER OPTIC SPLICE BOX DETAILS FOB-0002

Drawing No.	Title
J-JL-Z-00055	CBU WASTE SOLIDIFICATION PROJECTS SALTSTON FACILITY FIBER OPTIC SPLICE BOX DETAILS FOB-0001B
J-JL-Z-00060	CBU WASTE SOLIDIFICATION PROJECTS SALTSTON FACILITY FIBER OPTIC SPLICE BOX DETAILS FOB-0001B
J-JZ-Z-00148	SALTSTONE SDC 3A DRAINWATER LEVEL Z451-ZZZL-3100 - INSTRUMENT SCALING AND SETPOINT DOCUMENT
J-JZ-Z-00149	SALTSTONE SDC 3B DRAINWATER LEVEL Z451-ZZZL-3200 - INSTRUMENT SCALING AND SETPOINT DOCUMENT
J-JZ-Z-00150	SALTSTONE SDC 5A DRAINWATER LEVEL Z451-ZZZL-5100 - INSTRUMENT SCALING AND SETPOINT DOCUMENT
J-JZ-Z-00151	SALTSTONE SDC 5B DRAINWATER LEVEL Z451-ZZZL-5200 - INSTRUMENT SCALING AND SETPOINT DOCUMENT
J-JZ-Z-00152	SALTSTONE SDC 3A TRAIN C THERMOCOUPLE TREE Z451-ZZZT-3121 - INSTRUMENT SCALING AND SETPOINT DOCUMENT
J-JZ-Z-00153	SALTSTONE SDC 3B TRAIN C THERMOCOUPLE TREE Z451-ZZZT-3221 - INSTRUMENT SCALING AND SETPOINT DOCUMENT
J-JZ-Z-00154	SALTSTONE SDC 5A TRAIN C THERMOCOUPLE TREE Z451-ZZZT-5121 - INSTRUMENT SCALING AND SETPOINT DOCUMENT
J-JZ-Z-00155	SALTSTONE SDC 5BTRAIN C THERMOCOUPLE TREE Z451-ZZZT-5221 - INSTRUMENT SCALING AND SETPOINT DOCUMENT
J-JZ-Z-00199	SALTSTONE SDC 3A DRAIN WATER FLOW Z451-ZZZF-3110 - INSTRUMENT SCALING AND SETPOINT DOCUMENT
J-JZ-Z-00200	SALTSTONE SDC 3B DRAIN WATER FLOW Z451-ZZZF-3210 - INSTRUMENT SCALING AND SETPOINT DOCUMENT
J-JZ-Z-00201	SALTSTONE SDC 5A DRAIN WATER FLOW Z451-ZZZF-5110 - INSTRUMENT SCALING AND SETPOINT DOCUMENT
J-JZ-Z-00202	SALTSTONE SDC 5B DRAIN WATER FLOW Z451-ZZZF-5210 - INSTRUMENT SCALING AND SETPOINT DOCUMENT
J-RS-Z-00006	SALTSTONE PROCESS CONTROL SYSTEM REQUIREMENTS SPECIFICATION FOR SOFTWARE (U)
M-M6-Z-00117	CBU-WASTE SOLIDIFICATION PROJECTS SALTSTONE FACILITY SALTSTONE CELL #3, 3" GROUT FILL LINE & DRAINWATER RETURN LINE PIPING AND INSTRUMENTATION DIAGRAM
M-M6-Z-00118	CBU-WASTE SOLIDIFICATION PROJECTS SALTSTONE FACILITY SALTSTONE CELL #5, 3" GROUT FILL LINE & DRAINWATER RETURN LINE PIPING AND INSTRUMENTATION DIAGRAM
M-M6-Z-00125	INTERIM DRAWING FOR DCP NUMBER: J-DCP-Z-10002 – Cell 3 A&B Thermocouples
M-M6-Z-00126	INTERIM DRAWING FOR DCP NUMBER: J-DCP-Z-10002 – Cell 3 A&B Thermocouples
P-PA-Z-00035	Saltstone Disposal Cells 3A 3B & 5A 5B, Grout Fill, And Drainwater Return Piping Arrangement - Plan Sections & Details (U)
P-PE-Z-00010	SALTSTONE DISPOSAL SITE - CYLINDRICAL DISPOSAL CELLS 3A & 3B - EQUIPMENT ARRANGEMENT & EMBED PLATE LAYOUT
P-PE-Z-00011	200-Z AREA - SALTSTONE DISPOSAL SITE - CYLINDRICAL DISPOSAL CELLS 5A & 5B - EQUIPMENT ARRANGEMENT & EMBED PLATE LAYOUT
P-PI-Z-00019	3" GROUT FILL LINE – SSD507-P254-3" – PIPING STRESS ISOMETRIC
P-PM-Z-00028	VAULT 3A &3B DRAIN WATER RETURN DISCHARGE PUMP MOUNTING PLAN, ELEV. DETAILS
P-PM-Z-00029	VAULT 5A & 5B DRAIN WATER RETURN DISCHARGE PUMP MOUNTING PLAN, ELEV. DETAILS

Drawing No.	Title
SRR0000427	LCL DESIGN/INSTALLATION/DETAILS/AND LAYOUT DRAWINGS (EFI Vendor drawing, including all submittals)
SRRA011935	12-HD-269 BF 1H1W VERTICAL UPFLOW SYSTEM
SRRA015424	SDU 3/5 PROJECT DELTA V SYSTEM CONTROL PANEL PROJECT NO. D50922
SRRA017454	SDU 3/5 DRAINWATER PUMP
WB00122W	Z-AREA SALTSTONE DISPOSAL CELLS 3 & 5 2.9-MG Saltstone Storage Tanks (URS site development and backfill drawings)

Drawing No.	Title
E-DS-Z-00010	INTERIM TO E-DCP-Z-12003, REV. 0 - SDU 3 & 5 PAD-MOUNTED DISTRIBUTION DISC. SWITCH
E-DS-Z-00011	INTERIM TO E-DCP-Z-12003, REV. 0 - SDU 3 & 5 PADMOUNTED TRANSFORMER
J-JD-Z-00088	VAULT 2 & DISPOSAL UNITS (3/5) CCTV CAMERAS DATA SHEET
J-JD-Z-00129	SALTSTONE LEACHATE 3-WAY ELECTRIC BALL VALVES MOV-3100
J-JD-Z-00130	SALTSTONE LEACHATE 3-WAY ELECTRIC BALL VALVES MOV-5100
J-JD-Z-00131	Vault 3 Grout 3-Way Ball Valve MOV-3001
J-JD-Z-00135	SALTSTONE LEACHATE 3-WAY ELECTRIC BALL VALVES MOV-5200
J-JD-Z-00136	Vault 5 Grout 3-Way Ball Valve MOV-5001
J-JD-Z-00137	Vault 5 Grout 3-Way Ball Valve MOV-5002
J-JD-Z-00142	RADAR LEVEL TRANSMITTER FOR CELL #3A/#3B
J-JD-Z-00143	RADAR LEVEL TRANSMITTER FOR CELL #5A/#5B
J-JD-Z-00144	LI-3100/LI-3200 ROSEMOUNT 752 REMOTE F.F. INDICATOR
J-JD-Z-00145	LI-5100/LI-5200 ROSEMOUNT 752 REMOTE F.F. INDICATOR
J-JD-Z-00172	INSTRUMENT DATASHEET Cells 3 & 5 Local DCS Panel Vendor Supplied Z451005-DCS-PNL-0002
J-JD-Z-00195	MAGNETIC FLOW METERS FE/FIT-3110, 3210, 5110 AND 5210
M-DS-Z-00046	VAULTS 3A AND 3B SUMP PUMP DESIGN
M-DS-Z-00047	VAULTS 5A AND 5B SUMP PUMP DESIGN
M-DS-Z-00079	SALTSTONE 3-WAY PIGGABLE DIVERTER VALVES
C-SP-Z-00001	SPF – Z AREA TANK 50 RETURN TO SERVICE SSRT TANK ENCLOSURE PLATFORM FRAMING PLAN SECTIONS AN DETAILS
C-SS-Z-00001	SPF – Z AREA TANK 50 RETURN TO SERVICE SSRT TANK ENCLOSURE ROOF STRUCTURE FRAMING PLAN, SECTIONS & DETAILS

APPENDIX F VALVE LIST

SEE WSRC TECHBASE RESOURCE REPORT FOR SITE SYSTEM(S) IN THE SDD.

APPENDIX G EQUIPMENT LIST

SEE WSRC TECHBASE RESOURCE REPORT FOR SITE SYSTEM(S) IN THE SDD.

APPENDIX H SYSTEM POSITION PAPERS/DESIGN REPORTS

LWO-WSE-2006-00153 "Engineering Position on Functional Classification Boundary for SDU 4 Organic Modifications Temperature Interlocks"

C-TR-Z-00001 "SALTSTONE DISPOSAL UNIT 2 PERFORMANCE TESTING" REV 0

APPENDIX I TRACEABLILITY MATRIX (TBD)

APPENDIX J SDD DOCUMENT CROSS REFERENCE

Document Number	SDD Title	SSF System	SSF System Name	Site System	Site System Name
G-SD-Z-00001	Z AREA SITE	BLDG		BLDG	BUILDING
G-SD-Z-00003	Saltstone Process	SFT BMH	SFT Bulk Material Handling	N/A BMH	N/A Bulk Material Handling
G-SD-Z-00004	Saltstone Electrical	ELLV ELNH	120V Power Panels 480V Power Distribution	ELLV ELNH	240/208/120V Normal Power Distribution 480V Power Distribution
G-SD-Z-00005	Saltstone HVAC	HVAC	Heating, Ventilation and Air Conditioning	HVAC	Heating, Ventilation and Air Conditioning
G-SD-Z-00006	Saltstone Support	EEP DCS	Standby Power Distributed Control System	EEP DCS	Emergency Electrical Power Distributed Control System
G-SD-Z-00008	Saltstone Fire Protection	FP	Fire Protection	FP	Fire Protection
G-SD-Z-00009	SDU 6 Structures & Process Systems	SSD	Saltstone Disposal Unit	N/A	N/A

APPENDIX K SAFETY EQUIPMENT LIST

K.1 Safety Class (SC) Components

NONE

K.2 Safety Significant (SS) Components

Functions Supported	Equip ID	NAME	P&ID/ Diagram	Safety Function	System
1.1.2.1	Z-451004-SSD-VLR-004D-1	SDU 4 Cell D Vent	M-M6-Z-0045	Passive	SSD
1.1.2.1	Z-451004-SSD-VLR-004D-2	SDU 4 Cell D Vent	M-M6-Z-0045	Passive	SSD
1.1.2.1	Z-451004-SSD-VLR-004E-1	SDU 4 Cell E Vent	M-M6-Z-0045	Passive	SSD
1.1.2.1	Z-451004-SSD-VLR-004E-2	SDU 4 Cell E Vent	M-M6-Z-0045	Passive	SSD
1.1.2.1	Z-451004-SSD-VLR-004F-1	SDU 4 Cell F Vent	M-M6-Z-0045	Passive	SSD
1.1.2.1	Z-451004-SSD-VLR-004F-2	SDU 4 Cell F Vent	M-M6-Z-0045	Passive	SSD
1.1.2.1	Z-451004-SSD-VLR-004J-1	SDU 4 Cell J Vent	M-M6-Z-0045	Passive	SSD
1.1.2.1	Z-451004-SSD-VLR-004J-2	SDU 4 Cell J Vent	M-M6-Z-0045	Passive	SSD
1.1.2.1	Z-451004-SSD-VLR-004K-1	SDU 4 Cell K Vent	M-M6-Z-0045	Passive	SSD
1.1.2.1	Z-451004-SSD-VLR-004K-2	SDU 4 Cell K Vent	M-M6-Z-0045	Passive	SSD
1.1.2.1	Z-451004-SSD-VLR-004L-1	SDU 4 Cell L Vent	M-M6-Z-0045	Passive	SSD
1.1.2.1	Z-451004-SSD-VLR-004L-2	SDU 4 Cell L Vent	M-M6-Z-0045	Passive	SSD
1.1.2.1	Z-451004-SSD-VLR-004B-1	SDU 4 Cell B Vent	M-M6-Z-0045	Passive	SSD
1.1.2.1	Z-451004-SSD-VLR-004B-2	SDU 4 Cell B Vent	M-M6-Z-0045	Passive	SSD
1.1.2.1	Z-451004-SSD-VLR-004H-1	SDU 4 Cell H Vent	M-M6-Z-0045	Passive	SSD
1.1.2.1	Z-451004-SSD-VLR-004H-2	SDU 4 Cell H Vent	M-M6-Z-0045	Passive	SSD
1.1.2.1	Z-451002-SSD-	SDU 2, Cell 2A	M-M6-Z-00100	Passive	SSD

Functions Supported	Equip ID	NAME	P&ID/ Diagram	Safety Function	System
	VLR-0002A-1	Passive Vent			
1.1.2.1	Z-451002-SSD-VLR-0002A-2	SDU 2, Cell 2A Passive Vent	M-M6-Z-00100	Passive	SSD
1.1.2.1	Z-451002-SSD-VLR-0002A-3	SDU 2, Cell 2A Passive Vent	M-M6-Z-00100	Passive	SSD
1.1.2.1	Z-451002-SSD-VLR-0002B-1	SDU 2, Cell 2B Passive Vent	M-M6-Z-00100	Passive	SSD
1.1.2.1	Z-451002-SSD-VLR-0002B-2	SDU 2, Cell 2B Passive Vent	M-M6-Z-00100	Passive	SSD
1.1.2.1	Z-451002-SSD-VLR-0002B-3	SDU 2, Cell 2B Passive Vent	M-M6-Z-00100	Passive	SSD
1.1.2.1	Z-451003-SSD-VLR-0001	SDU 3, Cell 3A Passive Vent	M-M6-Z-00117	Passive	SSD
1.1.2.1	Z-451003-SSD-VLR-0002	SDU 3, Cell 3A Passive Vent	M-M6-Z-00117	Passive	SSD
1.1.2.1	Z-451003-SSD-VLR-0003	SDU 3, Cell 3A Passive Vent	M-M6-Z-00117	Passive	SSD
1.1.2.1	Z-451003-SSD-VLR-0004	SDU 3, Cell 3B Passive Vent	M-M6-Z-00117	Passive	SSD
1.1.2.1	Z-451003-SSD-VLR-0005	SDU 3, Cell 3B Passive Vent	M-M6-Z-00117	Passive	SSD
1.1.2.1	Z-451003-SSD-VLR-0006	SDU 3, Cell 3B Passive Vent	M-M6-Z-00117	Passive	SSD
1.1.2.1	Z-451005-SSD-VLR-0005A-1	SDU 5, Cell 5A Passive Vent	M-M6-Z-00118	Passive	SSD
1.1.2.1	Z-451002-SSD-VLR-0005A-2	SDU 5, Cell 5A Passive Vent	M-M6-Z-00118	Passive	SSD
1.1.2.1	Z-451005-SSD-VLR-0005A-3	SDU 5, Cell 5A Passive Vent	M-M6-Z-00118	Passive	SSD
1.1.2.1	Z-451005-SSD-VLR-0005B-1	SDU 5, Cell 5B Passive Vent	M-M6-Z-00118	Passive	SSD
1.1.2.1	Z-451002-SSD-VLR-0005B-2	SDU 5, Cell 5B Passive Vent	M-M6-Z-00118	Passive	SSD
1.1.2.1	Z-451005-SSD-VLR-0005B-3	SDU 5, Cell 5B Passive Vent	M-M6-Z-00118	Passive	SSD

APPENDIX L ACRONYM LIST

ANSI	American National Standards Institute
ASME	American Society of Mechanical Engineers
ASTM	American Society for Testing and Materials
CLD	Control Logic Diagram
°C	Degrees Celsius
°F	Degrees Fahrenheit
DCS	Distributed Control System
EEP	Standby Power
ELLV	120 V Power Distributions
ELNH	480V Power Distribution
IEEE	Institute of Electrical and Electronic Engineers
IPI	Installed Process Instrumentation
MCC	Motor Control Center
M&TE	Measuring and Test Equipment
NEMA	National Electrical Manufactures Association
NPH	Natural Phenomena Hazard
NFPA	National Fire Protection Association
PI	Process Information
P&ID	Piping and Instrumentation Diagram
PLC	Programmable Logic Controller
PNL	Panel
QA	Quality Assurance
SDD	System Design Description
SIL	Safety Integrity Level
SLD	Single Line Diagram
SQAP	Software Quality Assurance Plan
SRS	Savannah River Site
SSC	Structures, Systems and Components
TMS	Temperature Monitoring System
UL	Underwriter Laboratories
UPS	Uninterruptible Power Supply
VAC	Volts Alternating Current
WSRC	Washington Savannah River Company