SRS

Savannah River Site Liquid Waste Planning Process

SRR-LWP-2019-00008

SLUDGE Batch Plan

An Integrated System at the Savannah River Site

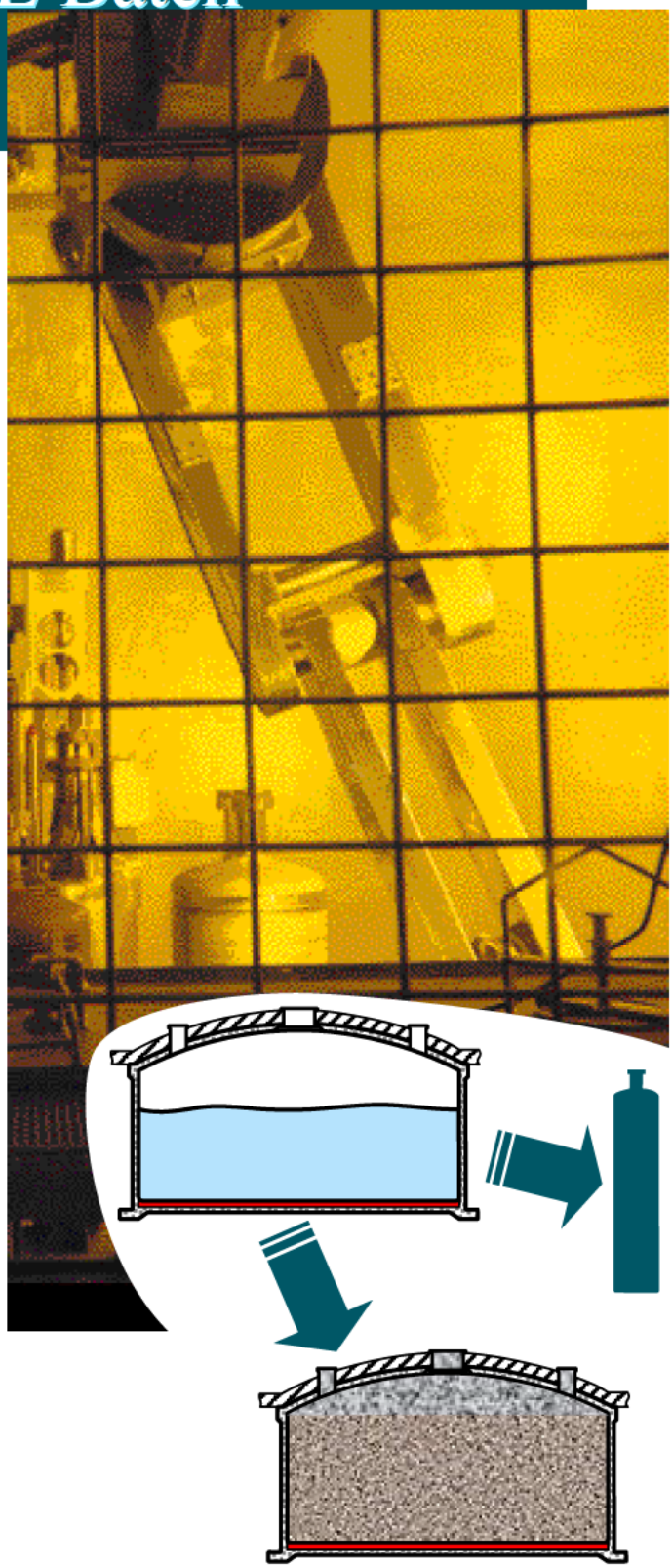

REVISION 1

July 2019

SRR-LWP-2019-00008
Revision 1
July 2019

Keywords:

DWPF Feed
Sludge Batches
Canisters

RETENTION: PERMANENT

SLUDGE BATCH PLAN 2019 IN SUPPORT OF LIQUID WASTE SYSTEM PLAN REV. 21

J. M. Gillam
T. A. Le

Savannah River Remediation
Liquid Waste Organization
Liquid Waste Planning
Aiken, SC 29808

Prepared for U.S. Department of Energy Under Contract No. DE-AC09-09SR22505

Approval

Authors

J.M. Gillam, Sludge & Salt Planning — Date: 7/1/19

T.A. Le, Sludge and Salt Planning — Date: 7/1/19

Technical Reviewer

S. T. Isom, Sludge and Salt Planning — Date: 7/1/19

Concurrence

B. A. Hamm, System Planning — Date: 7/1/19

Approval:

H. B. Shah, Manager-Sludge and Salt Planning — Date: 7/2/19

Table of Contents

1 Executive Summary 7
2 Introduction 10
3 Inputs and Assumptions 12
3.1 Aluminum Dissolution 12
3.2 Tank Farm Current Conditions 13
3.3 Future Sludge Batch Washing Assumptions 14
3.4 Assumptions for Additional Sludge 16
3.5 Assumptions for Sludge Removal 17
3.6 Assumptions for DWPF Processing 18
3.7 Sludge Batch Modeling Methodology 19
3.8 DWPF Processing 22
3.9 PCCS Modeling 22
3.10 DWPF Waste Acceptance Criteria 23
4 Canister Production and Batch Need Dates 27
4.1 Estimated Canisters and Need Dates 27
5 Risks and Issues 29
5.1 Equipment and Infrastructure Problems 29
5.2 Sludge Characterization Uncertainty 29
5.3 Sludge Behavior Uncertainty 30
5.4 New Programs or Delays in Currently Planned Programs 30
5.5 Sludge Processing Uncertainty 30
6 Conclusions and Recommendations 32
7 References 33

List of Tables

Table 1: SB10-HSB3 WAC Value Estimation: NOx, Hg, IDP, and Canister Fissile 24
Table 2: SB10-HSB3 WAC Value Estimation: Criticality and Hydrogen Generation ..25
Table 3: SB10-HSB3 WAC Value Estimation: Canister Heat, Gamma, and Neutron... 25
Table 4: Canister Production and Sludge Batch Feed Dates.. 27

List of Figures

Figure 1: System Plan Sludge Removal Sequence for Sludge Batch Preparation……20

Revision Log	
Revision 1	Corrects the inconsistency in naming futures sludge batches. These corrections do not change the Sludge Batch Plan projection values in any way.

List of Acronyms

ARP	Actinide Removal Process
cSMP	Commercial Submersible Mixing Pumps
CSSX	Caustic Side Solvent Extraction
DWPF	Defense Waste Processing Facility
HLW	High Level Waste
HM	H-Modified PUREX Process
Hg	Mercury
HSB	Heel Sludge Batch
IDP	Inhalation dose potential
LTAD	Low temperature aluminum dissolution
LWSP	Liquid Waste System Plan
MCU	Modular CSSX Unit
MST	Monosodium Titanate
PCCS	Product Composition Control System
PRFT	Precipitate Reactor Feed Tank
PUREX	Plutonium Uranium Extraction process
Q-Time	Quiescent Time
R2O	Sum of Alkali Materials
ROMP	Risk and Opportunity Management Plan
SB	Sludge Batch
SEFT	Strip Effluent Feed Tank
SMP	Submersible Mixer Pump
SOL	Sludge Oxide Loading
SPTK	System Planning Toolkit
SRAT	Sludge Receipt and Adjustment Tank
SRNL	Savannah River National Laboratory
SRS	Savannah River Site
TiO2	Titanium Dioxide
SWPF	Salt Waste Processing Facility
WAC	Waste Acceptance Criteria
WCS	Waste Characterization System
wt%	weight percent

1 Executive Summary

This Sludge Batch Plan estimates the Defense Waste Processing Facility (DWPF) feed composition for sludge batches that are devised as part of the Liquid Waste System Plan (LWSP) Revision 21 [Chew, Hamm, and Wells, 2019]. These compositions are used to assess projected compliance to the current DWPF Waste Acceptance Criteria (WAC). The compositions for Sludge Batch 10 (SB10) through SB16 are estimated by modeling the tank-to-tank transfers and sludge batch preparation steps in greater detail than for later sludge batches, providing insights to potential operational challenges and opportunities for the next ten years of feed to the DWPF. The compositions of later batches, designated Heel Sludge Batch 1 (HSB1) through HSB4 are more difficult to predict, and they employ less detail in developing the composition for the liquid component of the sludge feed to DWPF. Also, in this analysis, manageable inventory levels of DWPF feed material are verified.

Liquid Waste Planning routinely produces long-range planning documents such as the LWSP for the integrated Liquid Waste System. The Liquid Waste Planning group provides input to support the orderly planning of Liquid Waste System operation with regards to sludge batch preparation and qualification for feed to DWPF. Key outputs of the LWSP are the sludge batch sequence and timing, and DWPF canister production rate estimates. The Sludge Batch Plan supports those outputs and identifies associated program risks.

This document is intended for long-term planning and does not contain sufficient detail to guide operation of individual process steps. Any dates, volumes, and chemical compositions contained herein are planning approximations only. To guide actual execution of individual processing steps in the future, detailed plans will be developed. This document will be revised if significant changes occur in the planning bases that impact successful implementation of this Plan.

The LWSP devises a sequence of waste removal steps to best meet the goals, priorities, assumptions, and funding provided as inputs to that Plan. The Sludge Batch Plan builds further detail into the near-term sludge processing sequence devised by the LWSP. The result is a verification of the feasibility of preparing the sludge batches in the way prescribed by the LWSP, sludge batch composition estimates to verify their processability by DWPF, and recognition of potential risks to be addressed.

In this Plan, DWPF uses SB9 feed only at a rate necessary to support current salt processing capability until mid-2020, when the Salt Waste Processing Facility (SWPF) has started up and is generating Strip Effluent for DWPF. Then, canister production rates ramp up to 300 canisters per year (corresponding to 9M gallons per year salt processing rate) by the time that the glycolic acid flowsheet is implemented and SB10 is prepared, replenishing the sludge feed inventory. The glycolic acid flowsheet is needed to support flammability controls planned for SB10 and beyond. The Plan then assumes a 300 canister per year rate (except during a Melter replacement outage) until assumed to be lower for the last few "heel" sludge batches. Canister sludge oxide loading (SOL) is 36% beginning with SB10 and until SWPF ceases operations in November of 2030 and is then 40% until those last few "heel" batches. The final two batches, which consist of sludge tank heels, are projected at 32 and 28 wt% SOL, respectively. DWPF outages are projected to occur only from December 2019 to April 2020 (from the SWPF tie-in until strip effluent must be processed), and from January 2029 until April 2029 (Melter Replacement).

To the extent practical, this Plan utilizes the low temperature aluminum dissolution (LTAD) process to reduce the mass of sludge from high-aluminum sources. LTAD has been successfully performed for Sludge SB5, SB6, SB10, and also on the Tank 12 sludge heel. Leachate from those dissolutions is being processed by the Actinide Removal Process (ARP) and the Modular CSSX Unit (MCU). SWPF is expected to be able to process the high-aluminum liquid decanted from the later dissolutions when blended with other tank farm solutions.

Aluminum dissolution will reduce the number of glass canisters otherwise produced, by reducing the sludge solids mass.

LTAD will be utilized for SB11 through SB15. It could possibly also be utilized as a step for heel removal from some sludge tanks.

Sludge blending for makeup of sludge batches is devised to accommodate sludge movements for planned tank closure activities, to perform aluminum dissolution on high-aluminum content sludge from particular tanks, to wash the sludge as efficiently as possible, and to provide DWPF feed that will result in acceptable sludge processing and glass quality.

In the LWSP, strip effluent from ARP/MCU operation or SWPF operation is sent directly to DWPF. Any spent monosodium titanate (MST) found to be needed for remaining ARP/MCU operations, and from SWPF operations is sent directly to DWPF. Given the uncertainty of where and how oxalic acid cleaning will be applied to reduce tank heel volumes, potential bulk oxalic acid/sodium oxalate has not been included in the sludge batch modeling after SB9.

The LWSP does not call for addition of sludge modifier (synthetic sludge and/or iron) to sludge batches.

Differences in sludge batch sequencing, total number of canisters produced, and batch end dates between this Sludge Batch Plan and the previous Plan [Chew and Hamm, 2016] [Gillam and Shafer, 2016] are mainly driven by the following:

- The current conditions in the High-Level Waste (HLW) facilities do not reflect what was projected in the previous Plan. In February 2017, the second DWPF Melter was declared to have reached its End-of-Life after fourteen years of operations, greatly exceeding its design life and more than double the life of the first Melter. Melter replacement necessitated interruption of DWPF and MCU processing. Planned outages to make physical tie-ins for SWPF were accelerated to coincide with the Melter replacement outage. These outage-related tie-ins were completed, the Melter replaced, and DWPF operations resumed in December 2017.

- This Plan assumes aggressive and optimistic performance of sludge and salt processing, as per the LWSP, to project the best possible outcome for dispositioning the waste in the HLW Tank Farms.

- The previous Plan called for pouring more canisters from FY2017 to FY2021 than has occurred and will occur per this Plan.

- Synthetic sludge is not needed to trim sludge batches in this Plan. This is a result of (1) more balanced rates of sludge and salt processing, and (2) use of the Tank Closure Cesium Removal process, which reduces the constraints of close coupling the salt and sludge processing.

- More aluminum dissolution in the Plan - 375,000 kg vs 206,000 kg in the previous Plan.

- SWPF startup is assumed in May 2020 instead of December 2018.

- A higher SWPF processing rate of 9M gallons per year is planned, requiring an estimated glass pouring rate of 300 canisters per year.

2 Introduction

Cleanup initiatives at the Savannah River Site (SRS) include sludge processing. Sludge is the highest risk component of liquid waste since it contains the majority of the long-lived radionuclides in the SRS waste. SRS has been immobilizing sludge since 1996 with the startup of DWPF. To date, the Liquid Waste system has produced over 4170 canisters, about half of the final total expected.

The System Planning Toolkit (SPTK) Version 24 [Le, 2019] is a linked set of Excel workbooks used to calculate composition and identify possible processing constraints for each sludge batch. DWPF WAC [Brown, 2018] and Product Composition Control System (PCCS) limits were also evaluated within the SPTK. The limits which are not met are identified for each sludge batch in Sections 3.9 and 3.10.

This document is for planning purposes. The purpose of this document is to describe the Sludge Batch Plan in sufficient detail to establish project objectives and execution schedules. This Plan provides input on sludge batch sequence and timing, estimates of canister production numbers, and projected compliance to current DWPF WAC. It documents major risks, inputs, and assumptions associated with sludge processing.

Several studies have been conducted to better predict the quantity of sludge in the Tank Farms. Adjustment of this prediction has a significant impact on the number of future canisters to be produced [Hill, 2006]. The studies used tank waste sample data and empirical processing data from sludge batch vitrification. The first study quantified the magnitude of the disparity between the inventory records in the Waste Characterization System (WCS) predictions and measured sludge mass for sludge SB1A through SB4 [Elder and Hamm, 2006].

A second evaluation, "Estimating the Sludge Mass Remaining in SRS Waste Tanks after the Processing of Sludge Batch 4", performed a statistical analysis of the correlation between the WCS forecast and empirical experience for the first five sludge batches [Edwards, 2006].

A third study, "Sludge Characterization Model Using Dial-up Factors", analyzed sludge type, canyon processes, year of operation, existing sludge sample data, and the two studies mentioned above [Hamm and Elder, 2006]. The recommended sludge masses and compositions were developed by applying a series of mass dial-up factors to the WCS predictions.

Based on lessons from Tank 13 waste removal, the 'recommended' dial-up factor for the projected sludge mass of H Area low heat waste has been scaled back to correspond to the original WCS mass for this Plan.

Some other sludge masses are re-estimated in this Plan. The current estimated Tank 22 sludge inventory was reduced from 210,000 kg to 93,000 kg of insoluble solids, as a result of a sludge mapping [Clark (A), 2014] after removing some sludge and most of the liquid from the tank, instead of estimating from the measured sludge height at one riser in the tank. The Tank 15 sludge inventory is now estimated at 54,000 kg, based on sludge mapping after removing sludge for SB10 preparation.

Sludge mass estimates will continue to be evaluated as future waste removals and sludge batches are completed to determine whether general dial-up factors need to be readjusted.

This document is intended for long-term planning and does not contain sufficient detail to guide operation of individual process steps. Any dates, volumes, and chemical compositions contained herein are planning approximations only. To guide actual execution of individual processing steps in the future, detailed flowsheets will be developed. This document will be revised when significant changes occur in the planning bases that impact successful implementation of this Plan.

3 Inputs and Assumptions

Inputs and assumptions used in this Plan to project the timing and the composition for future sludge batches are summarized in the following sections. Assumptions are shown for aluminum dissolution, current Tank Farm conditions, sludge washing, amounts of additional sludge to be realized, sludge removal from storage tanks, and DWPF processing.

3.1 *Aluminum Dissolution*

Aluminum solids in the sludge are believed to be present in at least three forms – aluminum trihydrate or gibbsite, alumina monohydrate or boehmite, and aluminosilicate. Only the first two forms are soluble in caustic solutions. Aluminum dissolution is performed by adding 50 wt% NaOH to the process tank (Tank 51), while agitating the tank contents and heating to approximately 70 degrees Celsius for about one month.

The LTAD process was successfully implemented for SB5, SB6, and Tank 12 heel removal achieving an estimated reduction of 310 to 344 canisters at 36% SOL. This plan assumes the use of LTAD for SB10 through SB15.

Aluminum dissolution inputs and assumptions are as follows:

3.1.1 LTAD will be used for processing essentially all the sludge from Tanks 15, 35, 39 and most of the sludge from Tank 32. Those tanks hold "high-heat" HM (H Modified PUREX Process) sludge.

3.1.2 Aluminum dissolution will be performed in Tank 51.

3.1.3 Just prior to caustic addition for LTAD, the sludge can be concentrated to 8.0 wt% insoluble solids.

3.1.4 LTAD will dissolve up to 70% of the mass of the "high-heat" HM aluminum solids added to SB10 through SB15, as specified in the LWSP [Hamm (A), 2018].

3.1.5 Enough 50 wt% caustic is added for LTAD such that after dissolution, the [OH]/[Al] molar ratio in the supernate is at least 6.0. This ratio is assumed to be suitable for storage of the leachate.

3.1.6 Tank 51 will utilize conventional style slurry pumps, which have greater operating range than Submersible Mixer Pumps (SMPs) or "Commercial" SMPs (CSMPs) with respect to liquid height, fluid density, and slurry temperature.

3.1.7 Subsequent to LTAD and during batch washing, sufficient hydroxide concentration to avoid aluminum precipitation will be maintained by the addition of 50 wt% sodium hydroxide solution.

3.2 *Tank Farm Current Conditions*

Assumptions specific to the characterization of sludge tank contents, just prior to future sludge removal in the preparation of SB10 through SB16:

3.2.1 For Tanks 11, 13, 15, and 51, current sludge solid masses and supernate compositions are based on reported transfer volumes, analytical lab results, and running material balances.

3.2.2 The supernate composition in Tank 4 before sludge heel removal to Tank 7 is represented as a combination of 50 wt% NaOH solution, salt solution, Evaporator concentrate (recent sample), and inhibited water, as described in the Volume Balance [Hamm (B), 2018].

3.2.3 The supernate composition in Tank 7 prior to receipt of the Tank 4 sludge heel is that of salt solution as described by the Volume Balance [Hamm (B), 2018]. The level reported in the Volume Balance is also applied.

3.2.4 The composition provided by analysis of a Tank 41 sample [Nguyen, 2004] is used to represent the composition of salt solution from salt dissolution activities.

3.2.5 The Volume Balance [Hamm (B), 2018] specifies that the Tank 8 sludge heel is moved to Tank 33. The LTAD leachate composition developed for SB14 is used to represent supernate with that sludge heel.

3.2.6 The quantity and composition of solid salts in sludge Tanks 14, 26, 32, 33, 34, and 47 is as provided by the WCS database [WCS Online, 2018].

3.2.7 The supernate compositions of Tanks 35, 39, and 43 use the latest available Ntank sample database entries as of January 3, 2019 for each supernate species tracked. Depth samples rather than surface samples are preferred if results are different.

3.2.8 The current Tank 40 SB9 supernate composition and solids concentration are based on the SB9 WAPS sample taken in January 2018 [Trivelpiece, 2018], adjusted for subsequent feed transfers to DWPF and dilution with slurry pump bearing water using material balances.

3.2.9 The composition of insoluble solids in sludge tanks other than Tank 40 are from the WCS database [WCS Online, 2018].

3.2.10 The Tank 13 remaining solids mass has been estimated assuming that the remaining wet sludge volume [Clark (B), 2014] is settled at 0.5 kg/L. An estimated additional 28,000 kg of solids is deducted, based on a Tank 51 material balance that suggested that amount was removed to Tank 51.

3.2.11 The Tank 15 remaining solids mass is estimated at 54,000 kg by comparing the change in the mapped wet sludge volumes before and after waste removal for SB10, to the mass of solids removed from Tank 15 per material balances. The material balances used laboratory analysis results on Tank 15 slurry samples taken before sludge slurry transfers from Tank 15, and those transfer volumes.

3.2.12 Sludge tank solids masses in Tanks 4, 7, 8, 11, 14, 21, 22, 26, 32, 33, 34, 35, 39, 42, 43, and 47 are from the adjustment of the WCS database [WCS Online, 2018] inventory database, adjusted using the chosen "dial-up" factors, as described in Section 2.

3.2.13 The initial radiolytic heats of Tank 51 is from the WCS database [WCS Online, 2018].

3.3 *Future Sludge Batch Washing Assumptions*

Future sludge batch washing for SB10 through SB16 is modeled using general assumptions, as follows:

3.3.1 All Sludge batches are prepared in Tank 51, and then transferred to Tank 40 to feed DWPF.

3.3.2 Sludge Batches are washed to 1.0 M sodium in the supernate.

3.3.3 Settling characteristics of the current contents of Tank 51 (predominantly Tank 15 sludge) are estimated by observing the responses of the thermocouples in Tank 51, and fitting both that data, and the available turbid height measurements taken from Tank 51, to the "Renko" model described in the Reference [Gillam, 2013]. The resultant expression for inches of settled height is:

181" + (Initial slurried tank level – 181")*exp(-8.1* days settled/181)

3.3.4 Tank 26 solids in Tank 51 are assumed to settle like PUREX sludge, which is projected using a PUREX settling model [Lee, 1996] with an H_∞ input corresponding to a 20-day settled compaction of 292 grams of insolubles per liter of slurry [Ades, 2010].

3.3.5 The settling of the combination of the current Tank 51 sludge and the planned Tank 26 PUREX sludge is modeled using a technique that assumes independent behavior of the two sludge types [Gillam, 2013].

3.3.6 Slurry pump run frequencies for Tank 51 for SB10 preparation are estimated using the "gas release" quiescent times (Q-times) calculated as prescribed in the CSTF Flammability Control Program [Bui (A), 2018].

3.3.7 For SB10, the available sludge settling time is the projected Q-time, less the time required to reposition the decanting jet (or pump), execute the decant transfer, perform subsequent Q-time pump runs, plus some operating margin to ensure that the decant can be completed before the pump runs must begin. This difference between the Q-time and settling time is managed to be at least seven days.

3.3.8 For SB11 through SB16, the decanting and washing sequence is not constructed by projecting settling rates, Q-times, and individual decant volumes. Instead, insoluble solids concentrations in sludge slurry after settling are assumed. These concentrations are based on observed average results of settling for different types of sludge. The observed settled insoluble solids concentrations used to project the results of settling are:

High-heat HM sludge not subjected to LTAD	8.0 wt%
High-heat HM sludge after LTAD	5.5 wt%
PUREX sludge	17.0 wt%

For combinations of the types of sludges, mass-weighted averages of the above concentrations are used. These concentrations represent maximum solids concentrations attained by settling. A solids concentration step in the sludge batch modeling sequence might represent a series of actual settling steps that will be needed. Since settling will not typically attain the maximum solids concentrations given above, the above wt% values are usually reduced by 1 wt% to project concentration steps in the modeled sequence. When settling for a final decant of aluminum leachate after LTAD, or to concentrate the sludge batch just before transfer to the Tank 40 DWPF feed tank, it is likely that more settling and/or a deeper decant would be used, and the values above are not reduced by 1 wt%.

3.3.9 For SB11 through SB16, the methodology for projecting the washed sludge batch compositions is different than for SB10 of this Plan and for previous sludge batch plans, which individually model each successive decant within the constraints of settling rate and Tank 51 Q-time. Instead, a series of calculations are employed that sequentially dilute (by adding inhibited water) the projected Tank 51 contents to a desired liquid composition, concentrate the Tank 51 contents to the assumed sludge solids concentration described above, and adjust the liquid chemical composition by modeling the addition of chemical solutions that would be added to Tank 51. Several such sequences may be required for a particular sludge batch.

3.3.10 For SB10, jet decants to evaporator system tanks are generally from a tank elevation at least 24 inches above the projected turbidity level to comply with Evaporator Feed Qualification Program [Bui (B), 2018] requirements.

3.3.11 Corrosion inhibitor adjustments are assumed as necessary to comply with the Corrosion Control Program [Martin, 2015]. Addition of 50 wt% sodium hydroxide and 40 wt% sodium nitrite as needed is assumed. A sufficient margin over the minimum inhibitor requirements for final washed sludge is provided by a [NO2]/[NO3] molar ratio of 1.80 or greater for an assumed 40ºC supernate temperature.

3.3.12 A supernate temperature of 40ºC is generally assumed when applying the Corrosion Control Program [Martin, 2015] and Flammability Control Program [Bui (A), 2018] criteria. Higher temperatures are encountered during LTAD, but due to frequent slurry pump operation, no additional corrosion inhibitor is required for LTAD.

3.3.13 Evaporator capacity is maintained to support the Plan.

3.4 *Assumptions for Additional Sludge*

Assumptions pertaining to anticipated additional sludge being processed are as follows:

3.4.1 Tank 39 receives new receipts from H-Canyon at an assumed rate of 200,000 gallons of waste per year through FY2022. That rate then increases to 300,000 gallons per year through FY2030. Based on historical compositions, these rates correspond to 6700 kg per year and 10,000 kg per year of insoluble solids, respectively. Any future Canyon additions directly to sludge batches will be formally evaluated before being approved for impacts to the washing, DWPF criticality, and total fissile limit in glass.

3.5 *Assumptions for Sludge Removal*

The following assumptions pertain to the strategies and methods of waste removal from storage tanks, which impact the waste composition and process during sludge batch preparation, and the modeling for SB10 through SB16:

3.5.1 Saltcake dissolution from sludge tanks is modeled when applicable, in order to project supernate composition during sludge removal. Amounts and composition of salt in sludge tanks are from the WCS database [WCS Online, 2018].

3.5.2 It takes 1.93 gallons of water to dissolve one gallon of saltcake to saturation, resulting in a combined post-dissolution volume of 2.8 gallons [Nguyen, 2004].

3.5.3 Sludge removal is to be accomplished with SMPs or cSMPs, except in the case of Tanks 11 and 22.

3.5.4 SMPs and cSMPs require 120 inches of suction head to operate. While CSMPs might be shown to be operable with less suction head, that operating range has not yet been demonstrated.

3.5.5 Sludge solids have a density of 2.4 g/ml.

3.5.6 Insoluble solids concentration for newly slurried sludge slurry transfers into Tank 51 or sludge blend tanks will be no greater than 8 wt%.

3.5.7 After future sludge heel removal campaigns, about 2500 kg of insoluble solids are assumed to remain in the tank.

3.5.8 Transfers to and from sludge tanks in the transfer modeling are managed to maintain compliance with the Corrosion Control Program [Martin, 2015].

3.5.9 The composition in the sludge tanks feeding Tank 51 is, when practical, obtained by modeling the relevant tank to tank transfers in the Volume Balance [Hamm (B), 2018] up to the time of the sludge tank transfer. In cases where the sequence of transfers is too long to practically model, the composition is constructed from the breakdown of the tank contents given in the Volume Balance. Details of such adjustments are noted in the sludge preparation spreadsheets [Gillam, 2019].

3.6 *Assumptions for DWPF Processing*

The following assumptions pertain to the DWPF processing:

3.6.1 Future dilution of DWPF sludge slurry feed from Tank 40 due to slurry pump bearing purge water is not accounted for.

3.6.2 One additional Melter Replacement occurs. That outage is January through April of 2029.

3.6.3 SB9 is consumed only at the rate needed to support existing ARP/MCU salt waste processing capability, until mid-2020, when SWPF is operating and producing strip effluent. Then, DWPF production rates ramp up to 300 canisters per year by the time SB10 is ready. A 300 canister/year rate is maintained until near the end of batch HSB2. HSB3 and HSB4 are processed at only about 100 canisters/year, reflecting the greater compositional uncertainty with those batches.

3.6.4 Waste loading will be 32% SOL through the remainder of SB9, helping to extend the duration of that batch until SB10 is ready and SWPF is running.

3.6.5 Waste loading will be 36% SOL beginning with SB10, and until SWPF operations are complete in November 2030. Thereafter, waste loading will be 40 wt% beginning with the "sludge-only" DWPF feed period, until September 2033. After that time, waste loading of 32% and 28% SOL, is projected for sludge batches HSB3 and HSB4, respectively. Those lower loadings reflect greater compositional uncertainty of those batches.

3.6.6 Glass canisters are "double-stacked" in Glass Waste Storage Building (GWSB) #1. Additional storage beyond GWSB #2 will be provided by FY2030.

3.6.7 Implementation of Next Generation Solvent in SWPF will not require a major outage.

3.6.8 Frit 803 is selected for glass compositions of all batches in this Plan. During qualification of a specific batch it is possible that a different frit will be chosen to meet the glass acceptance constraints.

3.6.9 Strip effluent from both SWPF and MCU is transferred to the DWPF Strip Effluent Feed Tank (SEFT).

3.6.10 It is currently anticipated that MST will no longer be needed for ARP operations. Washed MST/sludge slurry from SWPF operations is transferred to the DWPF Precipitate Reactor Feed Tank (PRFT).

3.6.11 The impact of future neptunium or plutonium campaigns by H-Canyon operations beyond SB10 are currently unknown, and not accounted for in the DWPF feed stream. Any proposed special neptunium or plutonium campaigns will be evaluated for impacts to the Sludge Batch Plan, ensuring that the limit of total fissile of 897 g/m^3 in glass and DWPF criticality constraints are met.

3.7 *Sludge Batch Modeling Methodology*

Simply stated, material balances are used to track the quantities and compositions of waste that are moved into and out of sludge waste storage tanks, the Tank 51 sludge batch preparation tank, and the Tank 40 DWPF feed tank. The material balances model the results of the recent and planned waste transfers and processing. Excel spreadsheets are used to perform the material balances.

For this Plan, SB10, currently undergoing preparation, is modeled in greater detail than later sludge batches. In addition to the material balances used to track transfers, chemical additions, and stoichiometry, the settling rates of the sludge slurries are quantified, alpha and beta-gamma heats of the waste are tracked, and Q-times for Tank 51 are calculated. Tracking those additional variables allows modeling of a preparation strategy in sufficient detail to assess the approximate number and size of decants required. It also provides validation that the sludge batch is of a processable size.

SB11 through SB16 of this Plan are modeled in less detail. Alpha and beta-gamma heats are not tracked, Q-times are not calculated, and settling rates are not quantified. Instead of tediously constructing a series of individual decants, the batch preparation is modeled as a series of steps that dilute, concentrate, and chemically adjust the material in Tank 51. Assumptions of the wt% of solids attained in the concentration steps are made from historical experience for different sludge types. This method does not assess the volumes of decanted liquid generated during washing, but still provides an enhanced estimate of the volume and composition of the liquid component of the finished sludge batches.

The canister count and duration of the individual sludge batches are from calculations within the Tank Farm Projected Composition Workbook [Hamm (A), 2018].

The current sludge mass inventory used is based on the "recommended dial-up estimates" [Hamm and Elder, 2006]. Based on experience from Tank 13 bulk waste removal, dial-up factors for H Canyon low heat waste streams to the Tank Farm were removed beginning with the LWSP Rev. 18. With the LWSP Rev. 21, [Chew, Hamm, and Wells, 2019] sludge mass inventories have been updated in accordance with the latest available samples, sludge volume mappings, and transfer data, as described in Section 3.2.

Several key inputs to this modeling are specified by an overall liquid waste transfer sequence [Hamm (A), 2018], [Hamm (B), 2018] devised to meet the key input bases and assumptions of the LWSP [Chew, Hamm and Wells, 2019]. This sequence considered volume constraints, processing rates, and key compositional constraints. The information therein utilized for this Sludge Batch Plan includes the sequence of transfers leading up to the removal of sludge stored in sludge tanks, the source and quantity of solids included in each sludge batch, and the quantity of aluminum compounds dissolved in each sludge batch.

The modeling for this Sludge Batch Plan verifies that the nearer-term (SB10 through SB16) planned batches are manageable and applies greater detail to estimation of the supernate portion of those batches. Batches later than SB16 utilized fixed supernate compositions from the Tank Farm Projected Composition Workbook [Hamm (B), 2018].

Compositions of all sludge batches are used as inputs to the SPTK [Le, 2019] to project compositions for the sludge batch blends, and the resultant glass compositions in DWPF.

The plan modeled for processing and blending of sludge feed, including batch aluminum dissolution, is shown in Figure 1 in an abbreviated schematic depicting the sources of sludge for each sludge batch and each aluminum dissolution batch.

Figure 1: System Plan Sludge Removal Sequence for Sludge Batch Preparation

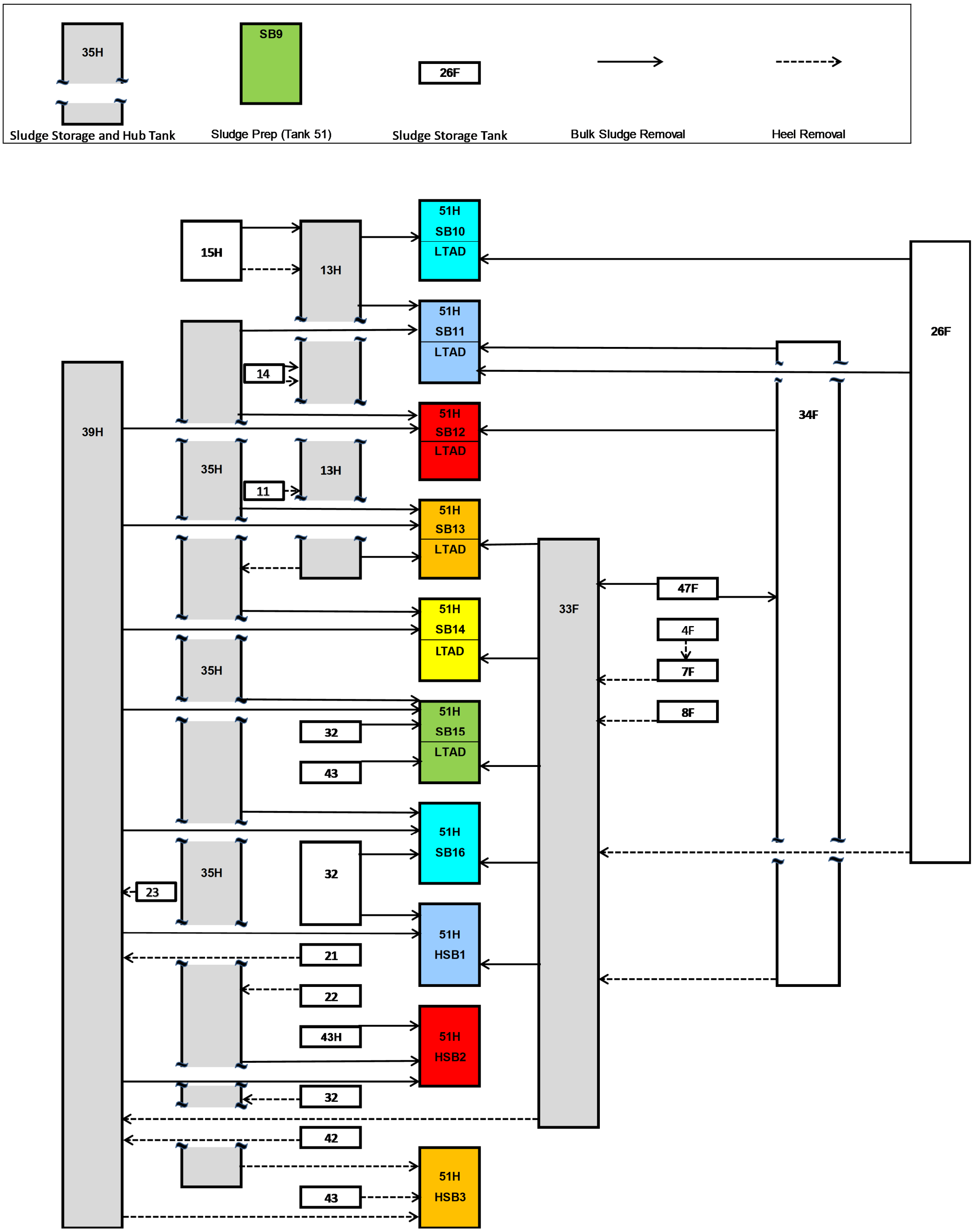

3.8 *DWPF Processing*

In this Plan, SB9 is fed only at a rate necessary to support current salt processing capability until mid-2020, when the SWPF has started up and is generating Strip Effluent for DWPF. Then, canister production rates ramp up to 300 canisters per year (corresponding to 9M gallons per year salt processing rate) by the time that the glycolic acid flowsheet is implemented and SB10 is prepared, replenishing the sludge feed inventory. The glycolic acid flowsheet is needed to support flammability controls planned for SB10 and beyond. The Plan then assumes a rate of 300 canisters per year (except during a Melter replacement outage) until assumed to be lower for the last few "heel" sludge batches. Canister sludge oxide loading (SOL) is 36% beginning with SB10 and until SWPF ceases operations in November of 2030 and is then 40% until those last few "heel" batches.

Assumptions pertaining to DWPF processing of feeds, including timing of planned outages, are given in Section 3.6.

3.9 *PCCS Modeling*

The PCCS modeling algorithms from the SPTK [Le, 2019] are used to determine whether each sludge batch (including frit) as currently planned produces acceptable glass. Frit 803 is utilized for all batches in this Plan.

Total MST and strip effluent additions from SWPF and ARP/MCU (if any) are added to the SRAT on a monthly basis, for calculation purposes. This is the most logical approach, as the LWSP [Chew, Hamm, and Wells, 2019] calls for SWPF and ARP/MCU additions to be made incrementally during the batches.

The PCCS algorithm analyzes high and low liquidus temperatures, high and low viscosities, high and low conservation, homogeneity (limit for amount of titanium oxide (TiO2) in combination with a minimum amount of aluminum/alkaline oxides in the sludge), and glass solubility limits (a maximum wt% is allowed in glass for certain compounds, such as titanium dioxide and TiO2) [Edwards, 2017]. All PCCS constraints were met for future sludge batches except for SB15 and HSB1, for which the low conservation constraint was not met [Le, 2019]. These conclusions were obtained using input generic slurry supernate compositions generated by the System Plan development for all sludge batches, and also using the slurry supernate compositions determined by the more detailed SB10 through SB16 modeling [Gillam, 2019].

Although the low conservation constraint was not met for SB15 and HSB1 in this plan, per our current practice each sludge batch would be evaluated by SRNL to ensure the PCCS constrains are met when the Sludge Batch is prepared. When the time comes to prepare

those batches, use of frits other than Frit 803, refining the limits and logic in the PCCS modeling algorithms, and revisions to processing strategy should allow all PCCS constraints in future batches to be met.

3.10 *DWPF Waste Acceptance Criteria*

Several DWPF WAC [Brown, 2018] limits are evaluated using the SPTK [Le, 2019]. These criteria include NO_x emissions, mercury (Hg) concentration, canister heat generated due to Tank 40 sludge transfers, gamma shielding, neutron shielding, inhalation dose potential (IDP), nuclear criticality limits, radiolytic hydrogen generation, and fissile mass per cubic meter of glass. Some other criteria in the DWPF WAC must be directly measured by SRNL during sludge batch flowsheet and glass qualification runs and cannot be accurately estimated. These criteria are not analyzed in this Plan.

The SPTK Engineering Evaluations Workbook [Le, 2019] is used to evaluate compliance to WAC limits. Each limit is evaluated on a monthly basis in the DWPF Engineering Evaluations Workbook. To determine slurry volumes, insoluble solids wt% and slurry specific gravity is estimated using the same generic value for each batch. A generic supernate composition is also employed in determining the WAC values tabulated here. For SB10 through SB16, SPTK evaluations were also performed using composition data generated from the more detailed sludge batch modeling [Gillam, 2019], giving WAC values that were insignificantly different from the tabulated values.

It is estimated that the WAC limits that have been evaluated meet the acceptance criteria except in case of IDP and neutron shielding limits. Note that the IDP limit has been recently reduced in support of a Justification for Continued Operation pertaining to DWPF Melter off-gas flammability controls. The resulting discrepancy between the IDP limit and the expected IDP of future sludge batches is expected to be resolved upon implementation of the control strategy for the final glycolic acid flowsheet Safety Basis, which will allow the IDP limit to be raised.

Table 1 shows averages of monthly values for SB10 through HSB4 for NOx Emissions, Hg Concentration, IDP, and Canister Fissile. Based on assumptions of wt% insoluble solids, specific gravity and supernate concentration, the limits for these acceptance criteria are met except for the IDP criteria for total rem/gal where IDP WAC limit is now reduced to 5.00E7 rem/gal. The acceptance limit for total IDP rem/gal is not met for SB11 – HSB2. Per our current practice, each individual batch would be adjusted and evaluated again the DWPF WAC criteria when the time comes for preparing a sludge batch. Each SB will meet the all the WAC criteria before feeding to DWPF.

Table 1: SB10-HSB4 WAC Value Estimation: NOx, Hg, IDP, and Canister Fissile

Sludge Batch	NO_x Emissions (Tank 40 Contribution)	Hg Concentration (Tank 40 Slurry)	Inhalation Dose Potential (Tank 40 Slurry)		Canister Fissile Limits (all contr butors)
	<103.52 ton/yr	< 21 g/l	<5.00E7 total rem/gal	<1.34 Ci Cs-137/gal	(<897 g fissile/m3) 0.61 kg fissile/can
SB10	44.8	3.3	2.1E+07	0.42	0.16
SB11	42.9	3.3	6.6E+07	0.69	0.26
SB12	56.6	6.2	1.7E+08	0.91	0.40
SB13	53.8	5.4	1.6E+08	0.83	0.47
SB14	47.0	3.9	1.2E+08	0.69	0.48
SB15	55.4	6.0	1.2E+08	0.62	0.33
SB16	50.4	4.8	9.2E+07	0.53	0.34
HSB1	45.8	3.5	6.7E+07	0.43	0.30
HSB2	44.9	3.9	5.7E+07	0.37	0.29
HSB3	24.9	3.4	4.8E+07	0.35	0.21
HSB4	22.6	3.4	4.8E+07	0.35	0.18

Table 2 shows the estimated WAC calculations for Criticality Limits and Radiolytic Hydrogen Generation. The acceptance limits for all of these criteria are met.

Table 2: SB10-HSB4 WAC Value Estimation: Criticality and Hydrogen Generation

	Criticality Limits (Tank 40 Slurry)					Radiolytic H_2 generation (SRAT)
Batch	<0.59 g Pu-239 eq/gal	Ratio of Weight of Fe/Pu-239 > 160	wt% U-235 eq. enrichment <0.93% or <5% w Mn/U-235 eq >70	Ratio of Weight of Mn/U-235 > 70	Ratio of Mass of Pu-240/Pu-241 >1	<5.74E-5 Cu. Ft./hr/gal
SB10	0.07	1114	0.83%	259	53	3.56E-05
SB11	0.11	883	0.29%	124	24	3.31E-05
SB12	0.20	472	0.84%	107	14	4.91E-05
SB13	0.23	387	0.48%	97	15	4.55E-05
SB14	0.24	405	0.29%	95	17	3.76E-05
SB15	0.17	568	0.34%	96	18	3.03E-05
SB16	0.17	545	0.25%	101	21	2.27E-05
HSB1	0.15	661	0.20%	104	24	1.41E-05
HSB2	0.16	644	0.35%	125	30	1.27E-05
HSB3	0.13	833	0.38%	110	32	1.14E-05
HSB4	0.13	833	0.38%	110	33	1.14E-05

Table 3 shows the estimated WAC calculations for Canister Heat Generation based on Tank 40 contribution and all contributors, gamma shielding and Neutron Shielding. The Sludge Batches meet these criteria limits except for SB12 and SB13. SB12 and SB13 do not meet the Neutron Shielding limit of 1.5E-03 Ci Alpha Emitters/ g IS.

Table 3: SB10-HSB4 WAC Value Estimation: Canister Heat, Gamma Shielding, and Neutron Shielding

Batch	Canister Heat Generation (Tank 40 Contribution)	Canister Heat Generation (All contributors)	Gamma Shielding (for Tank 40 Slurry)		Neutron Shielding (for Tank 40 Slurry)
	<437 Watts/canister	<792 Watts/canister	<3.7 mR/hr/g IS	<4070 mR/hr/gal	<1.50E-3 Ci Alpha Emitters/g IS
SB10	60	227	0.36	183	2.37E-04
SB11	108	210	0.61	312	7.65E-04
SB12	154	249	0.94	485	2.05E-03
SB13	146	237	0.85	446	1.89E-03
SB14	121	207	0.68	359	1.43E-03
SB15	111	160	0.60	320	1.31E-03
SB16	100	126	0.50	267	1.03E-03
HSB1	77	77	0.38	207	7.42E-04
HSB2	69	69	0.32	176	6.22E-04
HSB3	50	50	0.29	162	5.23E-04
HSB4	43	43	0.29	161	5.21E-04

Several risks to future sludge processing have been identified and evaluated against the WAC. Uncertainty remains as to total sludge mass in the tanks, sludge compositions, processability, and supernate concentrations. Heel batch compositions (HSB1 through HSB4) may pose future challenges as their makeup is not well-known at this time.

4 Canister Production and Batch Need Dates

Estimates of the total number of canisters produced from each sludge batch and batch need dates are shown in the following section. Information contained herein is to be used as an input to the LWSP.

The Sludge Batch Plan continues to evolve as new technologies are evaluated for reducing the total mass of solids sent to DWPF and increasing the rate at which the sludge is processed. This Plan includes detailed washing calculations and rearrangement of the waste removal plans shown in the previous Sludge Batch Plan.

4.1 *Estimated Canisters and Need Dates*

Table 4 [Chew, Hamm, and Wells 2019] provides the estimated number of canisters produced from each sludge batch and batch need dates. The aluminum dissolution process modeled for SB10 through SB15 provides processable sludge feed and reduces the number of canisters poured, shortening the life cycle. Note that the projected waste loadings listed for each batch have a high degree of uncertainty. The source tanks and Sludge Removal Sequence (Figure 1) should be viewed for clarification on how hub tanks are utilized to prepare sludge batches.

Producing canisters requires washing sludge feed batches in time for each new batch to be ready when sludge in the previous batch has been made into glass. This washing schedule requires maintaining enough tank space to support continued evaporator operations to receive and evaporate decants from sludge washing in a timely manner, ensuring that canister production is not interrupted.

Melter #3 replacement is shown during a DWPF feed outage beginning in January 2029 and ending April 2029.

Table 4: Canister Production and Sludge Batch Feed Dates

Sludge Batch	Source Tanks [a]	Projected SOL (weight %)	Actual Cans @ Projected SOL	Date Batch Finished @ Projected SOL[b]
Actual canisters poured through December 2018 (SB 1 through 9):			4,179	
SB9 (con't)	13, 12 Chemical Cleaning, 22 (solids from DWPF)	32%	272	Jun 2021
SB10	15 via 13 (HM HAW), LTAD, 26 (PUREX), AFS-2 (Pu)	36%	500	Feb 2023
SB11	15 via 13 (HM HAW), 35 (HM HAW), LTAD, 26, 34 (PUREX)	36%	450	Aug 2024
SB12	35, 39 (HM HAW), LTAD 34 (PUREX)	36%	425	Jan 2026
SB13	35, 39 (HM HAW), LTAD, 33 (PUREX), 11 &14 via 13 (MIXED HM/PUREX)	36%	450	Jul 2027
SB14	35 & 39 (HM HAW), LTAD, 47 via 33 (PUREX)	36%	425	Dec 2028
DWPF Melter Replacement — January 2029 thru April 2029				
SB15	35, 39, 32 (HM HAW), LTAD, 43 (MIXED HM HAW/LAW), 4, 7, 8, & 47 via 33 (PUREX)	36%	300	Apr 2030
SB16	32, 33, 35, 39 (HM HAW)	40%	375	Jul 2031
Heel Batch 1 [c]	39, 32 (HM HAW)(incl 23 Solids), 33 (PUREX)	40%	375	Oct 2032
Heel Batch 2 [c]	35 (HM HAW plus DWPF Solids), 39 (Incl 32 HM HAW, 24 Zeolite, 23 Solids), 43H (HM LAW)	40%	260	Sep 2033
Heel Batch 3 [c]	43, 35, 39 including Heels (Mixed HM HAW, HM LAW)	32%	60	Mar 2034
Heel Batch 4 [c]	40 Heel Material	28%	50	Sep 2034
		Total:	**8,121**	

[a] The indicated tanks are the sources of the major components of each sludge batch, not necessarily the sludge location just prior to receipt for sludge washing. Tanks 33 and 35, for example, are also used to stage sludge that is removed from other tanks. Some BWRE may be accelerated with respect to this table as conditions dictate.

[b] Dates are approximate and represent when Tank 40 gets to heel level. Actual dates depend on canister production rates

[c] Longer processing assumed for dilute heel processing

Note: Dates, volumes, and chemical or radiological composition information are planning approximations only.

5 Risks and Issues

Risks and issues that could impact this plan are documented herein. Most of these risks and issues are addressed in the "Risk and Opportunity Management Plan" (ROMP) [Winship, 2016] and detailed here with the cross-referenced risk number of the plan. Note that plans devised for specific activities (i.e., plans for individual sludge batches, waste removal campaigns, etc.) will provide focused programmatic risk assessments and identify risk handling strategies.

5.1 *Equipment and Infrastructure Problems*

5.1.1 Discovery of additional leak sites in a sludge tank. Risk #149 addresses this risk in the ROMP.

5.1.2 Tank Farm transfer line failure. Risk #295 addresses this in the ROMP.

5.1.3 SMP or conventional slurry pumps failure. Risk #011 addresses this risk in the ROMP.

5.1.4 Failure of Tank 51 or Tank 40 slurry pumps. Risk #011 addresses this risk in the ROMP.

5.1.5 Excessive bearing water leakage into Tank 40. Risks #011 and #094 address this risk in the ROMP.

5.1.6 Gas retention in waste impacts bulk waste removal. Risk #454 addresses this in the ROMP

5.1.7 Inadequate availability or reduced performance of evaporators. Risks #030, #116, #102, #344, and #094 address this risk in the ROMP.

5.2 *Sludge Characterization Uncertainty*

5.2.1 Differences between expected sludge mass estimates and masses actually realized. The impact of this uncertainty has been and is still expected to be manageable without additional risk mitigation strategies.

5.2.2 The extent of application of oxalic acid chemical cleaning is not known. Large amounts of oxalic acid usage and subsequent oxalate receipt into sludge batches increases the amount of sludge washing necessary and deposits sodium oxalate in evaporator tanks. The method for eventual disposition of those sodium oxalate solids is uncertain. Risks #33, #117, and #426 address this risk in the ROMP.

5.2.3 Uncharacteristic solids that could be encountered in waste removal tanks could result in washing constraints. Risks #484, #048, and #120 address this risk in the ROMP.

5.3 *Sludge Behavior Uncertainty*

5.3.1 Unanticipated difficulty in removing the high level waste sludge from waste removal tanks. Risk #048 addresses this risk in the ROMP.

5.3.2 Rheological properties of the sludge slurry could result in higher or lower slurry concentrations than predicted. Risk #048 addresses this risk in the ROMP.

5.3.3 Lower than expected settling rates could result in additional wash water volume and Q-time constraints. Risk #120 addresses this risk in the ROMP.

5.3.4 The aluminum dissolution process may be more or less successful than assumed for planning. Risk #484 addresses this risk in the ROMP.

5.4 *New Programs or Delays in Currently Planned Programs*

5.4.1 Inclusion of additional waste streams in the sludge batches could increase the washing volume requirements. Risk #394 addresses this risk in the ROMP.

5.5 *Sludge Processing Uncertainty*

5.5.1 Actual assessed Tank 40 Q-times could constrain the transfer volume of sludge batches into Tank 40. This could cause transfers into Tank 40 to be delayed, or cause sludge batches to be somewhat smaller than assumed in this Plan.

5.5.2 Non-routine constituents in sludge could be encountered that adversely impact sludge batch preparation. Risks #083 and #175 address this risk in the ROMP.

5.5.3 Some sludge batches in this Plan do not comply in full with the current PCCS Limits [Le, 2019]. It is also possible that sludge batches may not meet WAC Limits. Risk # 034 addresses this issue in the ROMP.

5.5.4 This Plan only model's preparation of sludge batches SB10 through SB16, resulting in supernate compositions specific to each of those batches. Later sludge batches utilize a standard but reasonably representative supernate composition. Those later batches could potentially introduce more uncertainty in the sludge batch compositions. Also, the final sludge heel batches will have a higher proportion of tank heel sludge from various tanks, also introducing compositional uncertainty. These sources of uncertainty could mask potential processing difficulties. Risk #33 partially addresses this risk in the ROMP.

6 Conclusions and Recommendations

Changes in inputs and assumptions to the LWSP have resulted in changes from the previous Sludge Batch Plan. One change is that the canister production rates for most of the remainder of SB9 are minimized to the number needed to support ARP MCU salt processing rates until SWPF comes online and SB10 is prepared.

Sludge processing is completed slightly sooner in this more aggressive Plan, in September 3034, compared to March 2037 for Revision 20 of the LWSP.

The total canister production decreases from 8,170 in Revision 20 of the LWSP to 8,121 for the current Plan. While this is a relatively small difference relative to the precision of the accounting over the life of the program, the greatest factor decreasing the number of canisters is a greater amount of aluminum dissolution applied in this Plan.

In this Plan, LTAD will be performed for SB10 through SB15.

Preparation of sludge batches through SB16, modeled in greater detail than in the LWSP, appears feasible.

This Plan's success is dependent upon on-time start-up and operation of SWPF implementation as planned. All PCCS criteria are met by projections for all sludge batches except for the Low Conservation constraint for which SB15 and HSB1 are not met as described in Section 3.9. WAC values meet the current limits, except for IDP of SB11 through HSB2 and Neutron Shielding of SB12 and SB13, as discussed in Section 3.10. If WAC or PCCS limits are not met in the future, there are options available such as utilizing frits other than Frit 803, less constrained PCCS modeling algorithms, relaxation of certain WAC constraints, and future modifications to DWPF chemistry and processing strategy.

Risk mitigation strategies should continue to be developed. Equipment and infrastructure related problems are likely to dominate risks that are within the control of the program. These will be the focus of planned risk mitigation efforts.

7 References

D. P. Chew, B. A. Hamm, and M. N. Wells, *Liquid Waste System Plan,* SRR-LWP-2009-00001, Revision 21, January 2019

D. P. Chew and B. A. Hamm, *Liquid Waste System Plan,* SRR-LWP-2009-00001, Revision 20, March 2016.

J. M. Gillam and A. R. Shafer, *Sludge Batch Plan 2016 in Support of System Plan Rev. 20*, SRR-LWP-2016-00006, Rev. 0, May 2016.

T. A. Le, *Glassmaker Projections Workbook_Ver 24*,\\pitstop\PITDATA\PitWork\Folks\Le-Thuy\Sludge Batch Plan\2018\2018_SPTK, Ver 24_, February 2019

M. K. Brown, *Waste Acceptance Criteria for Sludge, ARP, and MCU Process Transfers to 512-S and DWPF*, X-SD-G-00008, Rev. 27, October 2018.

P. J. Hill, Savannah River Site, *Selection of Sludge Masses for Life Cycle Liquid Waste (LLWD) System Plan Development,* , LWO-PIT-2006-00005, Rev. 0, July 2006.

H. H. Elder and B. A. Hamm, *Savannah River Site, DWPF Sludge Feed Mass – Predicted vs. Measured*, CBU-PIT-2006-00046, Rev. 0, March 2006.

T. B. Edwards, Savannah River Site, *Estimating the Sludge Mass Remaining in SRS Waste Tanks after the Processing of Sludge Batch 4,* SRNL-SCS-2006-00021, Rev. 0, July, 2006.

B. A. Hamm and H. H. Elder, Savannah River Site, *Sludge Characterization Model Using Dial-Up Factors*, CBU-PIT-2006-00058, Rev. 0, March 2006.

J. L. Clark (A), *Tank 22 Residual Volume Estimate*, U-ESR-H-00120, Rev. 0, June 2014.

B. A. Hamm (A), *Tank Farm Projected Composition Workbook_Ver 24*, \\pitstop\PITDATA\PitWork\Folks\Le-Thuy\Sludge Batch Plan\2018\2018_SPTK, Ver 24_TAL February 2019

B. A. Hamm (B), *Volume Balance for LWSP Rev. 21*, \\PITSTOP\pitdata\PitWork\Folks\Hamm-Barbara\2018 Plans and Cases\Case G18. FY20 Budget Request Input Case\Case G18. FY20 Budget Request Input Case_093_ for David, December, 2018.

Q. L. Nguyen, "*Tank 41 Salt Dissolution Flowsheet*", CBU-SPT-2004-00265, Rev. 0, November 2004.

Ntank Sample Database\\WG08\WASTE8\SAMPLES\HLW Tank Chemistry

Waste Characterization System (WCS) Online, December 2018.

C. L. Trivelpiece, et al, *Tank 40 SB9 Waste Acceptance Product Specifications (WAPS) Solids and Chemical Analyses (2018)*, September 2018.

J. L. Clark (B), *Tank 13 Volume Estimate Following Sludge Batch 9*, Rev. 0, May 2014.

J. M. Gillam, *Sludge Settling Rate Observations and Projections at the Savannah River Site*, SRR-LWP-2012-00070, February 2013.

E. D. Lee, *Insoluble Solids Settling in Tank 51 During Baseline Runs*, WSRC-RP-96-87, Rev. 0, May 1996.

M. J. Ades, *Hydrogen Retention in Slurried Sludge*, WSRC-TR-2004-00077, Rev. 2, January 2010.

H. Bui (A), *CSTF Flammability Control Program*, WSRC-TR-2003-00087, Rev. 13, June 2018.

H. Bui (B), *CSTF Evaporator Feed Qualification Program*, WSRC-TR-2003-00055, Rev. 13, June 2018.

K. Martin, *CSTF Corrosion Control Program*, WSRC-TR-2002-00327, Rev. 9, December 2015.

J. M. Gillam, *Rev 21 SB Washing*, \\PITSTOP\pitdata\PitWork\Folks\Gillam-Jeff\Future SBs\SB Plan 1218\121018 SB10-SB16.xlsm, January 2019.

G. C. Winship, *Risk and Opportunity Management Plan*, Y-RAR-G-00022, Rev. 11, May 2016.

T. B. Edwards, *SME Acceptability Determination for DWPF Process Control (U)*, WSRC-TR-95-00364, Rev. 6, June 2017.

Distribution:

Amidon, I. P. 704-56H
Blackmon, R. W. 766-H
Blocker, B. D., 766-H
Brass, E. A., 241-121H
Bumgardner, D. C., 704-56H
Chapman, N. F., 766-H
Chew, D. P., 766-H
Edwards, T. B., 999-W
Edwards, R. E., 766-H
Fellinger, T. L., 766-H
Fink, S. D., 773-A
Freed, E. J., 704-S
Freeman-Pollard, J. R., 704-56H
Foster, T. A., 766-H
Gillam, J. M., 766-H
Hamm, B. A., 766-H
Harp, K. D., 766-H
Hauer, K. A., 766-H
Hess, B. N., 241-156H
Hill, P. J., 766-H
Iaukea, J. W., 704-S
Isom, S.T., 766-H
Keefer, M. K., 766-H
Le, T. A., 766-H
Ledbetter, J. S., 704-56H
Mahoney, M. J., 766-H
Matis, G. J., 704-S
McNew, R. T., 707-4E
Occhipinti, J. E., 704-56H
Pennebaker, F. M., 773-A
Ray, J. W., 704-27S
Ridgeway, C., 707-7E
Samadi-Dezfouli, A.,707-4E
Shah, H. B.,766-H
Schmitz, M. A. 766-H
Tihey, J.R., 241-162H
Wells, M. N., 766-H