WSRC-SA-6
Rev 37
November 2018

FINAL SAFETY ANALYSIS REPORT

SAVANNAH RIVER SITE

DEFENSE WASTE PROCESSING FACILITY

VOLUME 3

NOVEMBER 2018

DISCLAIMER

This document was prepared by AECOM N&E Technical Services, LLC (N&E TS) under contract with Savannah River Remediation, LLC (SRR), subject to the warranty and other obligations of that contract and in furtherance of SRR's contract with the United States Department of Energy (DOE). N&E TS' findings represent its reasonable judgments within the time and budget context of its commission and utilizing the information available to it at the time. This document was prepared solely for the DOE for Contract DE-AC09-09SR22505.

Release to and Use by Third Parties. As it pertains to releases of this document to third parties, and the use of or reference to this document by such third parties in whole or in part, neither N&E TS, SRR, DOE, nor their respective officers, directors, employees, agents, consultants, or personal services contractors (i) make any warranty, expressed or implied, (ii) assume any legal liability or responsibility for the accuracy, completeness, or usefulness, of any information, apparatus, product or process disclosed herein or (iii) represent that use of the same will not infringe privately owned rights. Reference herein to any specific commercial product, process, or service by trademark, name, manufacture or otherwise, does not necessarily constitute or imply endorsement, recommendation, or favoring of the same by N&E TS, SRR, DOE, or their respective officers, directors, employees, agents, consultants or personal services contractors. The views and opinions of the authors expressed herein do not necessarily state or reflect those of the United States Government or any agency thereof.

WSRC-SA-6
Rev 37
November 2018

FINAL SAFETY ANALYSIS REPORT
SAVANNAH RIVER SITE
DEFENSE WASTE PROCESSING FACILITY

CHAPTER 4

SAFETY STRUCTURES, SYSTEMS, AND COMPONENTS

November 2018

CONTENTS

Page

4.0 SAFETY STRUCTURES, SYSTEMS, AND COMPONENTS 4.1-1

4.1 INTRODUCTION 4.1-1

4.2 REQUIREMENTS 4.2-1

4.3 SAFETY-CLASS STRUCTURES, SYSTEMS, AND COMPONENTS (SSCs) 4.3-1

4.3.1 Vitrification Building and Remote Process Cell Walls 4.3-1

4.3.1.1 Safety Function 4.3-1

4.3.1.2 System Description 4.3-2

4.3.1.3 System Evaluation 4.3-2

4.3.2 through 4.3.6 Deleted 4.3-2

4.3.7 CPC/SPC Vessels (PRFT, SEFT, SRAT, SME, SMECT, MFT, RCT, and DWTT) 4.3-3

4.3.7.1 Safety Function 4.3-3

4.3.7.2 System Description 4.3-3

4.3.7.3 System Evaluation 4.3-4

4.3.8 Chemical Process Cell Safety Grade Nitrogen Purge System 4.3-4

4.3.8.1 Safety Function 4.3-4

4.3.8.2 System Description 4.3-5

4.3.8.3 System Evaluation 4.3-6

CONTENTS (continued)

Page

4.3.9 PRFT Dip Leg Siphon Break 4.3-7

4.3.9.1 Safety Function 4.3-7

4.3.9.2 System Description 4.3-7

4.3.9.3 System Evaluation 4.3-7

4.3.10 Main Process Cell Crane Structure 4.3-7

4.3.10.1 Safety Function 4.3-7

4.3.10.2 System Description 4.3-8

4.3.10.3 System Evaluation 4.3-8

4.3.11 Remote Process Cell Covers 4.3-8

4.3.11.1 Safety Function 4.3-8

4.3.11.2 System Description 4.3-8

4.3.11.3 System Evaluation 4.3-8

4.3.12 Crane Maintenance Shield Door Structural Support 4.3-9

4.3.12.1 Safety Function 4.3-9

4.3.12.2 System Description 4.3-9

4.3.12.3 System Evaluation 4.3-9

4.3.13 through 4.3.27 Deleted 4.3-9

CONTENTS (continued)

Page

4.3.28 CPC Removable Wall 4.3-9

4.3.28.1 Safety Function 4.3-9

4.3.28.2 System Description 4.3-9

4.3.28.3 System Evaluation 4.3-10

4.3.29 through 4.3.34 Deleted 4.3-10

4.3.35 CPC/SPC Jumpers above Safety Class Jumpers 4.3-10

4.3.35.1 Safety Function 4.3-10

4.3.35.2 System Description 4.3-10

4.3.35.3 System Evaluation 4.3-10

4.3.36 through 4.3.43 Deleted 4.3-11

CONTENTS (continued)

Page

4.3.44 Melt Cell Crane Structure 4.3-11

4.3.44.1 Safety Function 4.3-11

4.3.44.2 System Description 4.3-11

4.3.44.3 System Evaluation 4.3-12

4.3.45 SEFT/PRFT Temperature Instrumentation and Associated Interlocks 4.3-12

4.3.45.1 Safety Function 4.3-12

4.3.45.2 System Description 4.3-12

4.3.45.3 System Evaluation 4.3-13

4.3.46 SRAT Temperature and Steam Flow Instrumentation and Associated Interlocks 4.3-13

4.3.46.1 Safety Function 4.3-13

4.3.46.2 System Description 4.3-14

4.3.46.3 System Evaluation 4.3-14

4.3.47 SEFT/PRFT Agitator Power Monitors and Associated Interlocks 4.3-15

4.3.47.1 Safety Function 4.3-15

4.3.47.2 System Description 4.3-15

4.3.47.3 System Evaluation 4.3-16

CONTENTS (continued)

Page

4.4 SAFETY-SIGNIFICANT STRUCTURES, SYSTEMS, AND COMPONENTS 4.4-1

4.4.1 Chemical Process Cell Primary Purge System 4.4-2

4.4.1.1 Safety Function 4.4-2

4.4.1.2 System Description 4.4-2

4.4.1.3 System Evaluation 4.4-3

4.4.2 through 4.4.4 Deleted 4.4-4

4.4.5 221-S Shielded Viewing Windows 4.4-4

4.4.5.1 Safety Function 4.4-4

4.4.5.2 System Description 4.4-4

4.4.5.3 System Evaluation 4.4-4

4.4.6 Melter 4.4-4

4.4.6.1 Safety Function 4.4-4

4.4.6.2 System Description 4.4-5

4.4.6.3 System Evaluation 4.4-5

4.4.7 Acid Drain Catch Tank Dikes 4.4-5

4.4.7.1 Safety Function 4.4-5

4.4.7.2 System Description 4.4-6

4.4.7.3 System Evaluation 4.4-6

4.4.8 Deleted 4.4-6

CONTENTS (continued)

Page

4.4.9 Low Point Pump Pit Primary Purge System 4.4-6

4.4.9.1 Safety Function 4.4-6

4.4.9.2 System Description 4.4-6

4.4.9.3 System Evaluation 4.4-7

4.4.10 Deleted 4.4-7

4.4.11 Acid Drain Catch Tank and Piping 4.4-7

4.4.11.1 Safety Function 4.4-7

4.4.11.2 System Description 4.4-8

4.4.11.3 System Evaluation 4.4-8

4.4.12 Low Point Pump Pit Crane Operator Station 4.4-8

4.4.12.1 Safety Function 4.4-8

4.4.12.2 System Description 4.4-8

4.4.12.3 System Evaluation 4.4-8

4.4.13 Failed Equipment Storage Vault Structure 4.4-9

4.4.13.1 Safety Function 4.4-9

4.4.13.2 System Description 4.4-9

4.4.13.3 System Evaluation 4.4-9

4.4.14 through 4.4.28 Deleted 4.4-9

4.4.29 Formic Acid Feed Tank and Piping 4.4-9

4.4.29.1 Safety Function 4.4-9

4.4.29.2 System Description 4.4-10

CONTENTS (continued)

Page

4.4.29.3 System Evaluation 4.4-10

4.4.30 Deleted 4.4-10

4.4.31 Formic Acid Feed Tank Dikes 4.4-10

4.4.31.1 Safety Function 4.4-10

4.4.31.2 System Description 4.4-11

4.4.31.3 System Evaluation 4.4-11

4.4.32 Deleted 4.4-11

4.4.33 Organic Acid Drain Catch Tank and Piping 4.4-11

4.4.33.1 Safety Function 4.4-11

4.4.33.2 System Description 4.4-11

4.4.33.3 System Evaluation 4.4-11

4.4.34 Organic Acid Drain Catch Tank Dikes 4.4-12

4.4.34.1 Safety Function 4.4-12

4.4.34.2 System Description 4.4-12

4.4.34.3 System Evaluation 4.4-12

4.4.35 Nitric Acid Feed Tank and Piping 4.4-12

4.4.35.1 Safety Function 4.4-12

4.4.35.2 System Description 4.4-12

4.4.35.3 System Evaluation 4.4-13

4.4.36 Nitric Acid Feed Tank Dikes 4.4-13

4.4.36.1 Safety Function 4.4-13

CONTENTS (continued)

Page

4.4.36.2 System Description 4.4-13

4.4.36.3 System Evaluation 4.4-13

4.4.37 through 4.4.38 Deleted 4.4-13

4.4.39 Interarea Transfer Lines 4.4-14

4.4.39.1 Safety Function 4.4-14

4.4.39.2 System Description 4.4-14

4.4.39.3 System Evaluation 4.4-16

4.4.40 422-S Superstructure 4.4-17

4.4.40.1 Safety Function 4.4-17

4.4.40.2 System Description 4.4-17

4.4.40.3 System Evaluation 4.4-18

4.4.41 SRAT/SME Gas Chromatographs and Associated Interlocks 4.4-18

4.4.41.1 Safety Function 4.4-18

4.4.41.2 System Description 4.4-18

4.4.41.3 System Evaluation 4.4-19

4.4.42 CPC Purge Flow Meters and Interlocks 4.4-19

4.4.42.1 Safety Function 4.4-19

4.4.42.2 System Description 4.4-19

4.4.42.3 System Evaluation 4.4-20

4.4.43 through 4.4.44 Deleted 4.4-20

CONTENTS (continued)

Page

4.4.45 Low Point Pump Pit Safety Grade Purge System 4.4-20

4.4.45.1 Safety Function 4.4-20

4.4.45.2 System Description 4.4-21

4.4.45.3 System Evaluation 4.4-21

4.4.46 Zone 1 Ventilation System 4.4-22

4.4.46.1 Safety Function 4.4-22

4.4.46.2 System Description 4.4-22

4.4.46.3 System Evaluation 4.4-24

4.4.47 Diesel Generator System 4.4-24

4.4.47.1 Safety Function 4.4-24

4.4.47.2 System Description 4.4-25

4.4.47.3 System Evaluation 4.4-27

4.4.48 Diesel Fuel Oil System 4.4-27

4.4.48.1 Safety Function 4.4-27

4.4.48.2 System Description 4.4-27

4.4.48.3 System Evaluation 4.4-28

4.4.49 Fan House Structure 4.4-28

4.4.49.1 Safety Function 4.4-28

4.4.49.2 System Description 4.4-28

4.4.49.3 System Evaluation 4.4-28

CONTENTS (continued)

Page

4.4.50 Fan House Maintenance Cranes and Structural Support 4.4-29

4.4.50.1 Safety Function 4.4-29

4.4.50.2 System Description 4.4-29

4.4.50.3 System Evaluation 4.4-29

4.4.51 Fire Protection Piping above the Diesel Generator Systems 4.4-30

4.4.51.1 Safety Function 4.4-30

4.4.51.2 System Description 4.4-30

4.4.51.3 System Evaluation 4.4-30

4.4.52 Diesel Generator Room Heater Supports..... 4.4-30

4.4.52.1 Safety Function 4.4-30

4.4.52.2 System Description 4.4-30

4.4.52.3 System Evaluation 4.4-31

4.4.53 Low Point Pump Pit Vessels..... 4.4-31

4.4.53.1 Safety Function 4.4-31

4.4.53.2 System Description 4.4-31

4.4.53.3 System Evaluation 4.4-31

4.4.54 Low Point Pump Pit Cells and Cell Covers 4.4-32

4.4.54.1 Safety Function 4.4-32

4.4.54.2 System Description 4.4-32

4.4.54.3 System Evaluation 4.4-33

CONTENTS (continued)

Page

4.4.55 Low Point Pump Pit Crane Structural Support / Superstructure 4.4-33

4.4.55.1 Safety Function 4.4-33

4.4.55.2 System Description 4.4-33

4.4.55.3 System Evaluation 4.4-33

4.4.56 Glass Waste Storage Building Vaults 4.4-34

4.4.56.1 Safety Function 4.4-34

4.4.56.2 System Description 4.4-34

4.4.56.3 System Evaluation 4.4-35

4.4.57 Glass Waste Storage Building Canister Supports 4.4-35

4.4.57.1 Safety Function 4.4-35

4.4.57.2 System Description 4.4-35

4.4.57.3 System Evaluation 4.4-35

4.4.58 Low Point Pump Pit Jumpers above Safety Significant Jumpers 4.4-36

4.4.58.1 Safety Function 4.4-36

4.4.58.2 System Description 4.4-36

4.4.58.3 System Evaluation 4.4-36

4.4.59 Sodium Nitrite Feed Tank Dike and Dike Drain Plug 4.4-37

4.4.59.1 Safety Function 4.4-37

4.4.59.2 System Description 4.4-37

4.4.59.3 System Evaluation 4.4-37

CONTENTS (continued)

Page

4.5 REFERENCES 4.5-1

4.6 TABLES 4.6-1

4.7 FIGURES 4.7-1

TABLES

Page

4.2-1 Safety Class and Safety Significant Performance Categories (Ref. 3) 4.6-1

4.2-2 Safety Significant Minimum Number of Levels of Control (Ref. 1)..... 4.6-2

4.2-3 Natural Phenomena Hazard Criteria 4.6-3

4.2-4 Design Requirements for Safety Class Items..... 4.6-4

4.3-1 Safety Class Structures, Systems, and Components 4.6-5

4.3-2 Safety Class Vessels 4.6-9

4.3-3 Safety Class Evaluations..... 4.6-10

4.4-1 Safety Significant Structures, Systems, and Components 4.6-25

4.4-2 Safety Significant Vessels..... 4.6-33

FIGURES

Page

4.3-1 through 4.3-3 Deleted 4.7-1

4.3-4 CPC Purge Systems 4.7-2

4.3-5 through 4.3-6 Deleted 4.7-3

4.3-7 SEFT/PRFT Temperature Instrumentation and Associated Interlocks……..4.7-4

4.3-8 SRAT Temperature and Steam Flow Instrumentation and Associated Interlocks……....4.7-5

4.4-1 through 4.4-5 Deleted 4.7-6

4.4-6 Safety Significant Zone 1 Ventilation System..... 4.7-7

4.4-7 Fan House Layout 4.7-8

4.4-8 Low Point Pump Pit Building Layout..... 4.7-9

4.4-9 LPPP Sections..... 4.7-10

4.4-10 LPPP Primary Purge System and Safety Grade Purge System..... 4.7-11

4.0 SAFETY STRUCTURES, SYSTEMS, AND COMPONENTS

4.1 INTRODUCTION

This section provides details on those Safety Class and Safety Significant Structures, Systems, and Components (SSCs) that are designated to protect the offsite public, provide defense in depth, or contribute to worker safety. The hazard analyses presented in Section 9.3 of this Safety Analysis Report (SAR) are used as the basis for identification of Safety Significant SSCs and administrative controls to protect the onsite worker. The design basis analyses presented in Section 9.4 of this FSAR are used as the basis for identification of Safety Class SSCs and administrative controls to protect the offsite public. The Functional Classification Report (Ref. 34) discusses and references the analyses that serve as the basis for the selection of these SSCs. The following additional hazards analyses have been performed and provide the basis for functional classification:

- Conversion of the Late Wash Facility to the 512-S Complex to accommodate the Actinide Removal Process (ARP), as well as the utilization of bubblers in the melter and potential flammability hazards from retained hydrogen and antifoam degradation products (ADPs), required the performance of a Consolidated Hazard Analysis Process (CHAP). References 211 and 280 are the CHAP reports, which are the bases for functional classification of 512-S and DWPF inter-area transfer lines.
- A CHAP was required to be conducted to evaluate hazards associated with confined hydrogen explosions in Non-Safety Related SSCs – Interaction Sources that could interact with safety related equipment and is documented in Reference 241.

The performance criteria and controls are provided in the Technical Safety Requirements (Ref. 62).

The methodology and criteria employed to identify safety related SSCs for the Defense Waste Processing Facility (DWPF) is Procedure 2.25 of Manual E7 (Ref. 1, 212). The Safety Class functional classification applies to those SSCs necessary for the protection of the health and safety of the offsite public from radiological and toxic hazards. The Safety Significant functional classification applies to those SSCs necessary for the protection of the health and safety of the worker from radiological and toxic hazards and those SSCs that were chosen due to their contribution to defense in depth.

Since the DWPF is classified as an existing facility, resolution of the functional classification of structures, systems, and components important to safety falls into the category of "backfit." In evaluating the required safety SSCs, three basic functions were identified as being required to provide a safe operating envelope. Taken together, these three functions provide sufficient assurance that the radioactive and hazardous materials are confined in a manner that provides the proper level of safety to facility workers and the public. The three functions include the following:

- Providing a qualified primary barrier to contain the radioactive or hazardous material,

- Providing a means to keep high energy events from breaching the primary or secondary barriers,
- Mitigating any breach of the primary barrier.

The SSCs that perform these functions are identified in Sections 4.3 and 4.4.

Upgrades to those SSCs designated as Safety Class or Safety Significant were initially identified and agreed upon by Department of Energy (DOE) as documented in the WSRC-TR-94-0395 (Ref. 2). The basic philosophy of SSC selection and scope of modification was compliance to the intent of DOE Order 6430.1A for safety class designation. Selection of the process vessels and their associated purging systems provides a level of protection against postulated design basis accidents, which meets the intent of 6430.1A. The Low Point Pump Pit (LPPP) process vessels, their purging systems, the LPPP cell structures and cell covers have been shown to require only Safety Significant SSCs, which have been designated as shown in Section 4.4.

4.2 REQUIREMENTS

Safety Class and Safety Significant SSCs are defined in accordance with the guidelines of DOE Standard 3009-94 (Ref. 31), which has been issued to outline the information that satisfies the requirements of DOE Order 5480.23.

Safety Class SSCs are evaluated against the Safety Class requirements identified in DOE Order 6430.1A (outlined in Table 4.2-4) and applied, as applicable, based upon the system evaluations contained within Section 4.3. Each system evaluation identifies the design criteria outlined in Table 4.2-4 with the basis for determining compliance as well as any design criteria that is not met by the DWPF design and the justification as applicable for an existing facility.

There are no specific design criteria requirements, except for natural phenomena hazard requirements, which are applicable to Safety Significant SSCs. However, the design must assure that the SSC fulfills the Safety Significant function under required design conditions. Safety Significant evaluations are provided in Section 4.4.

Safety classifications are used to determine Performance Categories of SSCs in accordance with DOE Order 5480.28 and DOE Standard 1021-93 (Ref. 32) for establishment of design criteria for Natural Phenomena Hazard (NPH) mitigation. Performance Categories are assigned based on the Safety Class or Safety Significant function of the SSC as shown in Table 4.2-1 (Ref. 3) and Table 4.2-2 (Ref. 1). The NPH design criteria for each of the Performance Categories are provided in DOE Standard 1020-94 (Ref. 33) and summarized in Table 4.2-3. For Safety Significant SSCs, Performance Criteria 2 (PC-2) were used as applicable. The system evaluations of the DWPF design against the NPH design requirements are presented in Section 4.3 for Safety Class SSCs and Section 4.4 for Safety Significant SSCs.

As part of the backfit philosophy for the safety class and safety significant SSCs, the applicability of 6430.1A was determined for each SSC. This determination was based on whether the SSC was the installation of a new SSC, which duplicated the functionality of an existing SSC (provided redundancy), or the installation of a new SSC, which either added functionality or upgraded the classification of the system. For the case where the new SSC was added to provide redundancy, even if the functional classification was upgraded to a higher classification, the facility code of record was used for the design/installation and is described in the functional design criteria for the modification (Ref. 53). (The code of record consists of the DWPF Basic Data Report, System Design Descriptions, and technical specifications.) This is in accordance with the allowance of SRS engineering standards (Ref. 3). For the case where a new SSC was added which provided additional functionality, the upgrade was performed in accordance with 6430.1A requirements. However, a detailed 6430.1A compliance evaluation was not performed for the overall system. Instead, a general assessment against the requirements of 6430.1A, as defined in Table 4.2-4, was performed to determine the overall compliance to safety class criteria.

The design requirements for Safety Class SSCs for normal operating conditions and Natural Phenomena Hazards are addressed above. Quality assurance for recent DWPF modifications, including those identified as part of the resolution to DWPF's safety basis (Ref. 2), was

implemented under the current DWPF QA Program (as described in FSAR Chapter 12). This program meets the requirements of 10CFR830.120.

In addition, a high level of quality assurance has been applied to those Safety Class SSCs which were not part of the physical modifications. These Safety Class SSCs were constructed under the quality assurance programs described below, which were in place for the majority of DWPF's construction. In addition, supplemental reviews have been performed for electrical and instrumentation systems to assure proper installation. Also, certain Safety Class SSCs were designated "Q," which invoked additional quality assurance requirements.

Construction requirements (including testing, inspection, etc.) have been assured to be met through the DWPF quality assurance programs as described in Reference 23. Reference 23 outlines the history of the DWPF construction quality assurance. From May 1984 to September 1985, special instructions, memorandums, procedures, and a Quality Control Manual were used to conduct quality control inspections. In September 1985 the "Construction Quality Control Instruction Manual" (Ref. 68) was issued. This manual of instructions and procedures defined the testing and inspection requirements for civil, architectural, structural, electrical, instrument, mechanical, and piping activities. It also supplemented the "Savannah River Construction Quality Control Manual," (Ref. 69) which was issued in February 1985 to satisfy DOE Orders 5700.6A and 5700.6B (Ref. 70 and 71). These documents defined the basis for Construction's quality program at the DWPF until March 1987. At that time, Construction developed the "Construction Quality Assurance Manual" (Ref. 72) and the Savannah River "Construction Project Procedures" (Ref. 73). These programs and procedures were in compliance with DOE Order SR 5700.6C (Ref. 74).

In addition, electrical systems have been addressed through the startup test program, by "as-built" walkdowns and through configuration controls design tools such as Set Route (previous system) and the Production Distribution Management System (current system). Instrumentation has been reviewed through a detailed system completion instrumentation review.

Many of the Safety Class SSCs were designated as "Q" items as part of the QA Assessment Program, which is discussed in Section 5.1.2.2. The Safety Class process vessels were designated "Q," as were many of the II/I structures of concern. The "Q" designator was applied for any item or service that was assessed to have characteristics whose quality requirements must be validated by an action plan. The QA Action Plans for those items identified as Q in the detailed component classification step were issued formally for each Q item (or group of similar Q items) and revised as required. In addition, Q symbols and Q Notes were required to be shown on those drawings and specifications that include Q items. This provided additional assurance that Q items were properly designed, constructed, installed, and tested.

The availability approach methodology recommended in Reference 1 was used to analytically demonstrate that the selected SSCs provide for safe operation when the applicable availability/reliability of these SSCs are taken into account. The availability/reliability of SSCs is addressed in the Probabilistic Safety Analysis (PSA) (Ref. 60). The PSA determined the probability of occurrence of accidents and the reliability of the SSCs for each accident. The quantification of the system analysis fault trees required the use of three general types of input data: generic component failure data, human reliability data, and facility specific data.

4.3 SAFETY-CLASS STRUCTURES, SYSTEMS, AND COMPONENTS (SSCs)

The accident scenarios and the expected operational occurrences as described in Chapter 9 of this FSAR are used to identify those hazards requiring Safety Class functions. Safety Class functions are selected to prevent (preferred) or to mitigate the release and include the following:

- Required to ensure that any credible event shall not exceed the Offsite Radiological Evaluation Guidelines to an individual member of the public
- Required to ensure that any credible event shall not exceed the Offsite Nonradiological Evaluation Guidelines to an individual member of the public
- Required to provide a supporting function to ensure the above Safety Class functions can be provided or to ensure that the required Safety Class function is not prevented
- Required to maintain operating parameters within the Technical Safety Requirements Limits that are required to ensure that the above Safety Class criteria are met.

The Safety Class SSCs are listed in Table 4.3-1 along with each functional requirement. Chapter 9 provides a listing of the accidents for which the Safety Class SSCs are providing protection. Due to the implementation of a more restrictive Inhalation Dose Potential limit in the Waste Acceptance Criteria (Chapter 11, Section 11.5.11.2.11), many of the previously required Safety Class SSCs no longer need to serve a Safety Class function and are not listed as Safety Class in Chapter 9. Although Chapter 9 may no longer list these controls as Safety Class, the SSCs maintain the pedigree of a Safety Class SSC and therefore remain recognized as such in the below sections. More detailed discussion of these systems and structures is provided below. A more detailed component listing is provided in the System Design Descriptions (SDDs).

Some of the Safety Class SSCs provide Safety Significant functions as well. This subsection discusses the Safety Class functions as well as Safety Significant functions that are provided by the Safety Class SSCs. All Safety Class functions are also Safety Significant functions. If a Safety Class SSC provides a Safety Significant function that is different from the Safety Class function, the function is designated as "Safety Significant Function." Section 4.4 discusses the Safety Significant functions that are not provided by Safety Class SSCs.

4.3.1 VITRIFICATION BUILDING AND REMOTE PROCESS CELL WALLS

4.3.1.1 Safety Function

Safety Class Function:

The Vitrification Building, including the RPC Walls, must maintain its integrity to prevent any damage to the integrity of Safety Class process vessels and/or Safety Class purge systems and support the MPC Crane.

The Vitrification Building must serve as a missile shield to the Safety Class vessels and purge systems within the building.

Safety Significant Function:

The RPC Walls also have the additional Safety Significant function of providing shielding for the workers within the Vitrification Building.

The Vitrification Building, including the Remote Process Cell (RPC) Walls, supports the Zone 1 Ventilation System airflow configuration (see Subsection 4.4.46). The building is required to provide a ventilation airflow path for the ventilation system.

4.3.1.2 System Description

The main part of the Vitrification Building (221-S), including the RPC Walls, is a reinforced concrete structure designed as a Category I facility (see Section 5.1 of this FSAR and Ref. 4). The general layout and arrangement are shown in Figures 1.2-4 through 1.2-14. A description of the building is provided in Section 5.2 of this FSAR. A more detailed design description is provided in the Facility Design Description (Ref. 120) and the System Design Description VS-01 (Ref. 102). The shielding design is described in Section 5.5 of this FSAR.

4.3.1.3 System Evaluation

The discussion below and Table 4.3-3 summarize the evaluation for the Vitrification Building, including the RPC Walls. A general assessment of the design requirements identified in DOE Order 6430.1A is as noted.

Design Requirement # 11, "Internal Hazard Resistance," requires the safety functions to not be compromised by internal hazards. The Vitrification Building and RPC walls are shown to withstand CPC cell overpressures caused by an internal CPC vessel explosion in Reference 281. No other internal hazards are identified for this SSC.

4.3.2 THROUGH 4.3.6 DELETED

4.3.7 CPC/SPC VESSELS (PRFT, SEFT, SRAT, SME, SMECT, MFT, RCT, AND DWTT)

4.3.7.1 Safety Function

Safety Class Function:

The CPC/SPC Vessels listed below must maintain their structural integrity to support the purging of their contents.

Safety Significant Function:

The CPC/SPC Vessels listed below must maintain their integrity to contain their contents.

4.3.7.2 System Description

The Safety Class CPC/SPC vessels consist of the following:

- Strip Effluent Feed Tank (SEFT)
- Sludge Receipt and Adjustment Tank (SRAT)
- Slurry Mix Evaporator (SME)
- Slurry Mix Evaporator Condensate Tank (SMECT)
- Melter Feed Tank (MFT)
- Precipitate Reactor Feed Tank (PRFT)
- Recycle Collection Tank (RCT)
- Decontamination Waste Treatment Tank (DWTT)

Table 4.3-2 provides the vessel details. Figures 1.2-4, 1.2-5, and 1.2-12 show the locations of these vessels.

Subsections 5.2.3.2 and 5.2.3.7 of this FSAR provide more discussion on these vessels. More detailed design description is provided in the System Design Descriptions CH-01, CH-04, and CH-05 (Ref. 100, 272, and 273).

Failure of the following SSC(s) could result in this SSC losing its ability to perform its required function(s):

- Vitrification Building (including the RPC Walls)
- CPC Safety Grade Nitrogen Purge System
- Main Process Cell (MPC) Crane Structure
- RPC Cell Covers
- Crane Maintenance Shield Door (CMSD) Structural Support
- Non-Safety Related SSCs – Interaction Sources (piping, jumpers, or components identified as potential confined hydrogen sources)
- CPC Removable Wall

4.3.7.3 System Evaluation

Functionality is assured through the implementation of the performance criteria identified in the TSRs or through the tests identified in Section 10.7 of this FSAR.

Design Requirement #5, "Explosion/Fire Resistance," is intended to provide assurance that safety related equipment will not fail due to internal or external explosions. A CHA (Ref. 241) was conducted which evaluated the impact of explosions in non-safety related SSCs due to confined hydrogen identified in Reference 242 on safety related SSCs. The CHA determined that explosive events in certain non-safety related SSCs (i.e. sources) can lead to design basis accident scenarios and thus require functional requirements for these non-safety related SSCs. Based on a waiver to Manual E7, 2.25 (Ref. 243) to extend the seismic interaction criteria to include explosive interaction on safety SSCs, these identified sources have been classified as PS. The sources external to the vessels have been qualified to withstand pressures caused by hydrogen explosions without causing failure of safety related equipment. The Structural Integrity Program will ensure these sources retain this ability by ensuring material condition equal to or better than assumed in the structural evaluation. The Configuration Control Program will ensure changes to the technical baseline are properly assessed to ensure confined hydrogen locations, if created, are evaluated to determine if they can impact safety related equipment and if so are evaluated to confirm their ability to withstand a confined hydrogen explosion.

Design Requirement #11, "Internal Hazard Resistance," is intended to provide assurance that the safety related equipment will not fail due to internal hazards. A CHA (Ref. 241) was conducted which evaluated the impact of explosions in non-safety related SSCs due to confined hydrogen identified in Reference 242 on safety related SSCs, which had not been previously evaluated in the DSA. It has been determined that the impact from these Non-Safety Related SSCs – Interaction Sources internal to the vessels will not impact the process vessels as to cause failure of their safety related function. This determination is based on the minimum wall thickness of the process vessels being adequate to sustain impact from hydrogen explosions from components without causing failure of the vessel (Ref. 245). The Configuration Control Program will ensure changes to the technical baseline are properly assessed to ensure confined hydrogen locations, if created, are evaluated to determine if they can impact safety related equipment and if so are evaluated to confirm their ability to withstand a confined hydrogen explosion.

Table 4.3-3 summarizes the evaluation for the CPC Vessels.

4.3.8 CHEMICAL PROCESS CELL SAFETY GRADE NITROGEN PURGE SYSTEM

4.3.8.1 Safety Function

The CPC Safety Grade Nitrogen Purge System prevents explosions in the SEFT, SRAT, SME, SMECT, MFT, PRFT, RCT, DWTT, (see Subsection 4.3.7) and the connected vent piping. The system maintains the vessels' vapor spaces below the Composite Lower Flammability Limit (CLFL). The system maintains sufficient inventory to perform this function for a minimum of 4 days.

4.3.8.2 System Description

The major safety class components comprising the CPC Safety Grade Nitrogen Purge System are listed below, and are outlined in Figure 4.3-4.

- Ambient vaporizers
- Interconnected liquid nitrogen storage tanks (located north of 221-S)
- Nitrogen level instrumentation
- Piping and valves
- Flow meters (local)
- Pressure Control Valves
- Purge Flow Valves (Manual Purge Flow Valves (needle or globe valves))
- Purge Hanford connector and jumper
- Tornado missile shield (shielding around piping, caging around system components, and bollards [Refs. 205, 206, 207, 256]).

The nitrogen system provides liquid nitrogen to its vaporizers, which convert the liquid nitrogen to gaseous nitrogen. The PCV's on the nitrogen tanks control the pressure in the liquid nitrogen tanks. The gaseous nitrogen is delivered via the distribution piping through the purge jumpers (connected by Hanford connectors) to the vessels. The system is pressurized to the final pressure control valves (primary purge/safety grade interface). Upon low pressure in the CPC purge header, the nitrogen system will provide purge flow to the safety class vessels.

The CPC Primary Purge System header and CPC Safety Grade Nitrogen Purge System header are connected and share the same inlet piping to the process vessels.

The required purge flow is provided through a manual purge flow valve (needle or globe valve). The SRAT, SME, SMECT, MFT, SEFT, PRFT, RCT, and DWTT purge supply lines include redundant pressure control valves which maintain the upstream pressure required for the flow elements.

The vessel's purge flow instrumentation and the nitrogen supply level instrumentation provide post accident monitoring capabilities. The CPC Safety Grade Nitrogen Purge System does not rely upon electrical power.

The safety grade nitrogen inventory is based on a higher flow rate for the first 24 hours with a reduced flow rate for the remaining 72 hours. This requires operator action within 24 hours to reduce the purge flows.

Table 4.3-2 provides the vessel details for the safety grade liquid nitrogen storage tanks. Subsection 5.2.3.2 of this FSAR also discusses the CPC purges. More detailed design description is provided in the System Design Description SU11 (Ref. 15) and Backfit Analysis Package (Ref. 230).

Failure of the following SSC(s) could result in this SSC losing its ability to perform its required function(s):

- Vitrification Building (including the RPC Walls)
- CPC/SPC Vessels (SEFT, SRAT, SME, SMECT, PRFT, MFT, RCT, and DWTT)
- Main Process Cell (MPC) Crane Structure
- RPC Cell Covers
- Crane Maintenance Shield Door (CMSD) Structural Support
- CPC Removable Wall
- CPC/SPC Jumpers Above Purge Jumpers
- Non-Safety Related SSCs – Interaction Sources (piping, jumpers, or components identified as potential confined hydrogen sources)

4.3.8.3 System Evaluation

Functionality is assured through the implementation of the performance criteria identified in the TSRs or through the tests identified in Section 10.7 of this FSAR.

The discussion below and Table 4.3-3 summarize the evaluation for the CPC Safety Grade Nitrogen Purge System. A general assessment of the applicable design requirements identified in DOE Order 6430.1A is as noted.

Design Requirement #5, “Explosion/Fire Resistance,” is intended to provide assurance that safety related equipment will not fail due to internal or external explosions. A CHA (Ref. 241) was conducted which evaluated the impact of explosions in non-safety related SSCs due to confined hydrogen identified in Reference 242 on safety related SSCs. The CHA determined that explosive events in certain non-safety related SSCs (i.e. sources) can lead to design basis accident scenarios and thus require functional requirements for these non-safety related SSCs. Based on a waiver to Manual E7, 2.25 (Ref. 243) to extend the seismic interaction criteria to include explosive interaction on safety SSCs, these identified sources have been classified as PS. The sources have been qualified to withstand pressures caused by hydrogen explosions without causing failure of safety related equipment. The Structural Integrity Program will ensure these sources retain this ability by ensuring material condition equal to or better than assumed in the structural evaluation. The Configuration Control Program will ensure changes to the technical baseline are properly assessed to ensure confined hydrogen locations, if created, are evaluated to determine if they can impact safety related equipment and if so are evaluated to confirm their ability to withstand a confined hydrogen explosion.

Design Requirement #6, "Single Failure Resistance," is intended to provide assurance of performance of the safety function by providing redundancy, independence, separation and/or diversity. The following is a list of single failure items that do not meet the single failure criteria but for which compensatory measures are provided or have been judged to have sufficient reliability or diversity to not require complete redundancy and preclude common mode failures.

PASSIVE:

The piping, jumpers and Hanford Connectors are single failure components but are judged to have sufficient reliability to provide an adequate flow path without redundancy. These have been qualified to the applicable NPH criteria (Ref. 38 and 124).

Design Requirement # 7, "Equipment Environment Consideration," assures Safety Class items must be qualified to function under the most limiting accident conditions of interest at end of life. To assess the effects of exposure of equipment to harsh environments, a review was performed for each component and determined that the functionality of the Safety Class component was not impacted by the potential adverse environmental condition (Ref. 65 and 117). Subsequent changes to this system are performed in compliance with the Engineering Standards Manual (Ref. 275).

4.3.9 PRFT DIP LEG SIPHON BREAK

4.3.9.1 Safety Function

The PRFT Dip Leg Siphon Break prevents siphons from the PRFT to the LPPP.

4.3.9.2 System Description

The PRFT Dip Leg is part of the PRFT (see Subsection 4.3.7) and is fabricated from C-276 and contains an adequate siphon break (i.e., holes) above the tank overflow elevation (Ref. 238).

There are no SSCs whose failure could result in this SSC losing its ability to perform its required function.

4.3.9.3 System Evaluation

Table 4.3-3 summarizes the evaluation for the PRFT Dip Leg.

Design Requirement #5, "Explosion/Fire Resistance," is intended to provide assurance that safety related equipment will not fail due to internal or external explosions. A CHA (Ref. 241) was conducted which evaluated the impact of explosions in non-safety related SSCs due to confined hydrogen identified in Reference 242 on safety related SSCs. It was determined that impact from these non-safety related SSCs could impact the PRFT Dip Leg Siphon Break, however it would not cause failure of its safety related function.

4.3.10 MAIN PROCESS CELL CRANE STRUCTURE

4.3.10.1 Safety Function

The Main Process Cell (MPC) Crane Structure is designated as Safety Class due to II/I issues to support the operation of the Safety Class Systems within the process cells by preventing its collapse from causing their failure.

4.3.10.2 System Description

The MPC Crane is an overhead crane (bridge and trolley) located on the third level of the Vitrification Building inside the MPC Canyon (see Figure 1.2-14). The Safety Class salient features of the MPC Crane are its two bridge girders, girder end trucks, trolley assembly (including wheels and rails), and structural support. The structural support consists of the Vitrification Building and RPC walls, which support the crane runway. The MPC Crane (including the bridge and trolley) is analyzed to assure it does not fall during the DBE event. (Ref. 26).

A description of this crane is provided in Subsection 5.2.3.11 of this FSAR.

More detailed design description is provided in the System Design Description VS03 (Ref. 103).

Failure of the following SSC(s) could result in this SSC losing its ability to perform its required function(s):

- Vitrification Building (including the RPC Walls)

4.3.10.3 System Evaluation

Table 4.3-3 summarizes the evaluation for the MPC Crane.

4.3.11 REMOTE PROCESS CELL COVERS

4.3.11.1 Safety Function

The Remote Process Cell (RPC) Covers are designated as Safety Class due to II/I issues to support the operation of the Safety Class and Safety Significant Systems within the process cells by preventing its collapse from causing their failure.

4.3.11.2 System Description

The RPC Covers weigh approximately 10,000 pounds each (for the credited ventilation covers). Subsection 5.2.2.1 of this FSAR provides additional discussion of the covers. More detailed design description is provided in the System Design Description VS03 (Ref. 102).

Failure of the following SSC(s) could result in this SSC losing its ability to perform its required function(s):

- Vitrification Building and RPC Walls
- MPC Crane Structure
- CMSD Structural Support

4.3.11.3 System Evaluation

Table 4.3-3 summarizes the evaluation for the RPC Covers.

4.3.12 CRANE MAINTENANCE SHIELD DOOR STRUCTURAL SUPPORT

4.3.12.1 Safety Function

The CMSD Structural Support is designated as Safety Class due to II/I issues to support the operation of the Safety Class Systems within the process cells by preventing its collapse from causing their failure.

4.3.12.2 System Description

The CMSD is located between the Crane Maintenance Area (CMA) and the RPC (see Figure 1.2-14) and permits passage of the MPC Crane from the RPC into the CMA. The vertical lift shield door provides radiation shielding for personnel working in the process cell crane decontamination and maintenance area. The door weighs approximately 310 tons and is constructed of a stainless steel shell filled with concrete. The CMSD hoist system raises and lowers the CMSD with cables.

Subsection 5.2.2.1 of this FSAR provides more discussion on the CMSD. More detailed design description is provided in the System Design Description VS01 (Ref. 102).

Failure of the following SSC(s) could result in this SSC losing its ability to perform its required function(s):

- Vitrification Building

4.3.12.3 System Evaluation

Table 4.3-3 summarizes the evaluation for the CMSD.

4.3.13 THROUGH 4.3.27 DELETED

4.3.28 CPC REMOVABLE WALL

4.3.28.1 Safety Function

The CPC Removable Wall supports the operation of the Safety Class Systems within the process cell by preventing its collapse from causing their failure.

4.3.28.2 System Description

The CPC Removable Wall (see Figure 1.2-12) is a reinforced concrete wall with carbon steel skin. It is lifted out in three sections by the MPC Crane. More detailed design description is provided in the System Design Description VS03 (Ref. 102).

Failure of the following SSC(s) could result in this SSC losing its ability to perform its required function(s):

- Vitrification Building (including the RPC Walls)
- Chemical Process Cell Safety Grade Nitrogen Purge System
- MPC Crane Structure

4.3.28.3 System Evaluation

Table 4.3-3 summarizes the evaluation for the CPC Removable Wall.

4.3.29 THROUGH 4.3.34 DELETED

4.3.35 CPC/SPC JUMPERS ABOVE SAFETY CLASS JUMPERS

4.3.35.1 Safety Function

The CPC/SPC Jumpers Above Safety Class Jumpers support the operation of the Safety Class Systems beneath it by preventing its collapse from causing their failure.

4.3.35.2 System Description

The jumpers located above the Safety Class jumpers are used for electrical or chemical supplies. These jumpers are connected to the canyon walls and vessels with Hanford Connectors. The Hanford Connector is installed by using a motor driven impact wrench to close (engage) the jaws to the nozzle.

More detailed design description is provided in the System Design Description CH-01 (Ref. 100).

Failure of the following SSC(s) could result in this SSC losing its ability to perform its required function(s):

- Vitrification Building (including the RPC Walls)
- MPC Crane Structure
- RPC Cell Covers
- CMSD Structural Support
- CPC Removable Wall
- Non-Safety Related SSCs – Interaction Sources (piping, jumpers, or components identified as potential confined hydrogen sources)

4.3.35.3 System Evaluation

Functionality is assured through the implementation of the performance criteria identified in the TSRs or through the tests identified in Section 10.7 of this FSAR.

Table 4.3-3 summarizes the evaluation for the CPC/SPC Jumpers Above Safety Class Jumpers.

During installation and removal of jumpers, there is a period of time between the time the jumper is set in place and when the Hanford connector is closed. This is judged to be acceptable given the amount of time that the jumpers are in this configuration and the probability of a coincident DBE event.

Design Requirement #5, "Explosion/Fire Resistance," is intended to provide assurance that safety related equipment will not fail due to internal or external explosions. A CHA (Ref. 241) was conducted which evaluated the impact of explosions in non-safety related SSCs due to confined hydrogen identified in Reference 242 on safety related SSCs. The CHA determined that explosive events in certain non-safety related SSCs (i.e. sources) can lead to design basis accident scenarios and thus require functional requirements for these non-safety related SSCs. Based on a waiver to Manual E7, 2.25 (Ref. 243) to extend the seismic interaction criteria to include explosive interaction on safety SSCs, these identified sources have been classified as PS. The sources have been qualified to withstand pressures caused by hydrogen explosions without causing failure of safety related equipment. The Structural Integrity Program will ensure these sources retain this ability by ensuring material condition equal to or better than assumed in the structural evaluation. The Configuration Control Program will ensure changes to the technical baseline are properly assessed to ensure hydrogen locations, if created, are evaluated to determine if they can impact safety related equipment and if so are evaluated to confirm their ability to withstand a confined hydrogen explosion.

4.3.36 THROUGH 4.3.43 DELETED

4.3.44 MELT CELL CRANE STRUCTURE

4.3.44.1 Safety Function

The Melt Cell Crane Structure is designated as Safety Class due to II/I issues to support the operation of the Safety Class Systems beneath it by preventing its collapse from causing their failure.

4.3.44.2 System Description

The Melt Cell (MC) Crane is an overhead crane (bridge and trolley) located within the Melt Cell. The Safety Class salient features of the MC Crane are its two bridge girders, girder end trucks, trolley assembly (including wheels and rails), and structural support. The MC Crane (including the bridge and trolley) is analyzed to assure it does not fall during the DBE event (Ref. 110). A more detailed design description is provided in the System Design Description VS03 (Ref. 103).

Failure of the following SSC(s) could result in this SSC losing its ability to perform its required function(s):

- Vitrification Building (including the RPC Walls)
- MPC Crane Structure
- RPC Cell Covers

4.3.44.3 System Evaluation

Table 4.3-3 summarizes the evaluation for the Melt Cell Crane Structure.

4.3.45 SEFT/PRFT TEMPERATURE INSTRUMENTATION AND ASSOCIATED INTERLOCKS

4.3.45.1 Safety Function

The SEFT/PRFT Temperature Instrumentation and Associated Interlocks provide indication of the tank liquid temperature and interlock the transfer pump, sample pump and tank agitator on high temperature to prevent a flammable condition.

4.3.45.2 System Description

The major Safety Class components comprising the SEFT/PRFT Temperature Instrumentation and Associated Interlocks are outlined in Figure 4.3-7 and consist of the following:

- RTD Elements (Liquid)
- Thermowells
- Electrical Jumpers
- Wall Penetrations
- Wall Termination Boxes

The PRFT/SEFT Liquid Temperature Instrumentation is a thermowell and RTD assembly installed in the bulk liquid of the vessels to measure liquid temperature. There are two RTDs installed in each tank. The signals are sent through electrical jumpers, penetrations and wall termination boxes to provide a temperature signal that is used on high temperature to actuate an interlock.

The SEFT and PRFT contain waste that may have organic carryover in the liquid phase that would be released into the tank vapor space at a rate that is temperature dependent. The requirement to control temperature, and thereby prevent a release of organic into the SEFT and PRFT vapor spaces, is only necessary when there is sufficient organic in the tank liquid volume to create a flammable vapor space. The amount of liquid that could contain enough organic to cause a flammable vapor space of either tank has been determined in Reference 280. For liquid levels above these liquid volumes the temperature is controlled in the tanks to limit the release of organic. To limit the amount of organic released to the vapor space and thus a flammable condition, the temperature of the liquid is maintained within the specified limit. Internal heat inputs for the SEFT or PRFT are the pumps and agitator in the tanks, and are therefore interlocked off before the temperature can rise above the temperature of concern (Ref. 229).

Failure of the following SSC(s) could result in this SSC losing its ability to perform its required function(s):

- Vitrification Building (including the RPC Walls)

- MPC Crane Structure
- RPC Cell Covers
- Non-Safety Related SSCs – Interaction Sources (piping, jumpers, or components identified as potential confined hydrogen sources)

4.3.45.3 System Evaluation

Table 4.3-3 summarizes the evaluation for the SEFT/PRFT Temperature Instrumentation and Associated Interlocks.

Table 4.3-3, provides the design criteria assessment for the Safety Class (SC) design of the interlocks for the SEFT and PRFT. The design requirements for SC were not initially met in 4 requirement categories (DBE Resistance, Single Active Failure Resistance, Safety Class Electrical Requirements and QA Requirements). Additional backfit assessment determined the design criteria were adequate for the SC design of the interlock systems required for the introduction of the SE stream into 221-S (Ref. 229 and 233).

Design Requirement #5, "Explosion/Fire Resistance," is intended to provide assurance that safety related equipment will not fail due to internal or external explosions. A CHA (Ref. 241) was conducted which evaluated the impact of explosions in non-safety related SSCs due to confined hydrogen identified in Reference 242 on safety related SSCs. The CHA determined that explosive events in certain non-safety related SSCs (i.e. sources) can lead to design basis accident scenarios and thus require functional requirements for these non-safety related SSCs. Based on a waiver to Manual E7, 2.25 (Ref. 243) to extend the seismic interaction criteria to include explosive interaction on safety SSCs, these identified sources have been classified as PS. The sources external to the vessel have been qualified to withstand pressures caused by hydrogen explosions without causing failure of safety related equipment. The Structural Integrity Program will ensure these sources retain this ability by ensuring material condition equal to or better than assumed in the structural evaluation. The Configuration Control Program will ensure changes to the technical baseline are properly assessed to ensure confined hydrogen locations, if created, are evaluated to determine if they can impact safety related equipment and if so are evaluated to confirm their ability to withstand a confined hydrogen explosion. The sources internal to the vessel were not qualified; however, impact from these sources would cause the interlock to occur.

4.3.46 SRAT TEMPERATURE AND STEAM FLOW INSTRUMENTATION AND ASSOCIATED INTERLOCKS

4.3.46.1 Safety Function

The SRAT temperature and steam flow instrumentation ensures boiling is maintained prior to and during transfers of SE to the SRAT and interlocks off the SEFT and PRFT feed flow to the SRAT through the transfer pumps/orifices on low temperature or low steam flow to prevent flammable condition in the SRAT and prevent carry over of Isopar L to down stream vessels. The orifices are sized to limit the feed flow to support the purge system and downstream condensation of organic in the SRAT condenser train.

4.3.46.2 System Description

The major safety class components comprising the SRAT Temperature and Steam Flow Instrumentation and Associated Interlocks (except for the orifices, which are shown in Figure 6.1-4) are outlined in Figure 4.3-8 and listed below.

- SEFT/PRFT Waste Transfer Orifices
- SRAT Temperature Instrumentation
- SRAT Steam Flow Instrumentation
- Critical Plant Air Check Valves
- Steam Piping Downstream of Flow Elements Including the Canyon Jumper

The SRAT receives waste for processing that may have organic carryover in the liquid phase. To limit the amount of organic buildup in the vapor space and thus a flammable condition, the SRAT is maintained at boiling conditions to ensure the Isopar L is steam stripped as the waste is metered into the SRAT. This causes the organics of concern to be stripped and be vented out with the vessel purge and not carryover to down stream vessels. The transfer rate of Isopar L is limited by an orifice in each of the PRFT and SEFT feed lines to the SRAT. The orifices are sized to limit the feed flow to the SRAT from the SEFT or PRFT to 10 gpm at normal pump speed (Ref. 247, 248, 274). The Critical Plant Air check valves (Figure 4.3-8) prevent the possibility of steam from flowing into the air system bypassing the SRAT. Interlock signals are taken from the liquid SRAT temperature and the steam flow rate to the SRAT. If the liquid temperature is too low (indicative of a loss of boiling) or steam flow is too low, then the transfer from the SEFT or PRFT is prevented/stopped.

Failure of the following SSC(s) could result in this SSC losing its ability to perform its required function(s):

- Vitrification Building (including the RPC Walls)
- MPC Crane Structure
- RPC Cell Covers
- CPC Jumpers Above Safety Class Jumpers
- Non-Safety Related SSCs – Interaction Sources (piping, jumpers, or components identified as potential confined hydrogen sources)

4.3.46.3 System Evaluation

Table 4.3-3 summarizes the evaluation for the SRAT Temperature and Steam Flow Instrumentation and Associated Interlocks.

Table 4.3-3, provides the design criteria assessment for the Safety Class (SC) design of the interlocks for the SRAT. The design requirements for SC were not met in 4 requirement categories (DBE Resistance, Single Active Failure Resistance, Safety Class Electrical Requirements and QA Requirements). Additional backfit assessment determined the design

criteria were adequate for the SC design of the interlock systems required for the introduction of the SE stream into 221-S (Ref. 229 and 233).

Design Requirement #5, "Explosion/Fire Resistance," is intended to provide assurance that safety related equipment will not fail due to internal or external explosions. A CHA (Ref. 241) was conducted which evaluated the impact of explosions in non-safety related SSCs due to confined hydrogen identified in Reference 242 on safety related SSCs. The CHA determined that explosive events in certain non-safety related SSCs (i.e. sources) can lead to design basis accident scenarios and thus require functional requirements for these non-safety related SSCs. Based on a waiver to Manual E7, 2.25 (Ref. 243) to extend the seismic interaction criteria to include explosive interaction on safety SSCs, these identified sources have been classified as PS. The sources external to the vessel have been qualified to withstand pressures caused by hydrogen explosions without causing failure of safety related equipment. The Structural Integrity Program will ensure these sources retain this ability by ensuring material condition equal to or better than assumed in the structural evaluation. The Configuration Control Program will ensure changes to the technical baseline are properly assessed to ensure confined hydrogen locations, if created, are evaluated to determine if they can impact safety related equipment and if so are evaluated to confirm their ability to withstand a confined hydrogen explosion. The sources internal to the vessel were not qualified; however, impact from these sources would cause the interlock to occur.

4.3.47 SEFT/PRFT AGITATOR POWER MONITORS AND ASSOCIATED INTERLOCKS

4.3.47.1 Safety Function

The SEFT and PRFT Agitator Power Monitors and Associated Interlocks provide indication of agitator power and interlock off the SEFT and PRFT transfer pumps to ensure the contents of the SEFT and PRFT are well mixed during transfers to the SRAT. This will prevent a higher than analyzed organic concentration that may lead to a flammable condition in the SRAT and possible carryover of the Isopar L to process vessels downstream of the SRAT.

4.3.47.2 System Description

The major Safety Class components comprising the SEFT/PRFT Agitator Power Monitors and Associated Interlocks are agitator power instrumentation, contactor panels and local control stations (LCS).

A description of the functional classification break down is as follows. The agitator is operated by a motor powered via an electrical jumper (Ref. 100). The contactor panels contain the sensing circuitry and are supplied by PS power. The contactor panels supply a signal to the trip units located in the SC LCS panels. Upon sensing low agitator power, the transfer pumps for the SEFT or PRFT are de-energized. The power supply for both the agitator sensing and tripping circuitry is PS since a loss of power will shut down either all equipment or just the transfer pumps resulting in a safe condition.

The SEFT and PRFT provide feed for the SRAT. They contain waste that may contain organic carryover in the liquid phase. The organic could separate and form pools of organic on the liquid surface when the waste is not mixed. The pools of organics would be transferred as a slug to the SRAT overwhelming its ability to strip and purge the organic from the vapor space leading to a flammable vapor space condition. To prevent slugs of organic from entering the SRAT, it is ensured the contents of the SEFT and PRFT are well mixed during a transfer by continuously mixing the SEFT and PRFT with an agitator.

Failure of the following SSC(s) could result in this SSC losing its ability to perform its required function(s):

- Vitrification Building (including the RPC Walls)
- Non-Safety Related SSCs – Interaction Sources (piping, jumpers, or components identified as potential confined hydrogen sources)

4.3.47.3 System Evaluation

Table 4.3-3 summarizes the evaluation for the SEFT/PRFT Agitators and Associated Interlocks (Ref. 233).

Design Requirement #5, "Explosion/Fire Resistance," is intended to provide assurance that safety related equipment will not fail due to internal or external explosions. A CHA (Ref. 241) was conducted which evaluated the impact of explosions in non-safety related SSCs due to confined hydrogen identified in Reference 242 on safety related SSCs. The CHA determined that explosive events in certain non-safety related SSCs (i.e. sources) can lead to design basis accident scenarios and thus require functional requirements for these non-safety related SSCs. Based on a waiver to Manual E7, 2.25 (Ref. 243) to extend the seismic interaction criteria to include explosive interaction on safety SSCs, these identified sources have been classified as PS. The sources have been qualified to withstand pressures caused by hydrogen explosions without causing failure of safety related equipment. The Structural Integrity Program will ensure that these sources retain this ability by ensuring material condition equal to or better than assumed in the structural evaluation. The Configuration Control Program will ensure changes to the technical baseline are properly assessed to ensure confined hydrogen locations, if created, are evaluated to determine if they can impact safety related equipment and if so are evaluated to confirm their ability to withstand a confined hydrogen explosion.

4.4 SAFETY-SIGNIFICANT STRUCTURES, SYSTEMS, AND COMPONENTS

The PHA (Ref. 29), the 512-S Consolidated Hazards Analysis (Ref. 211), and the Consolidated Hazards Analysis for the DWPF (Ref. 280) were used to identify those Safety Significant functions that are required to prevent (preferred) or to mitigate the event as outlined in Procedure Manual E7 (Ref. 1, 212). Functional classification of SSCs in the DWPF was based the revision of Procedure Manual E7, Procedure 2.25 that represented the code of record at the time (Ref. 1, 212, 284, or 285). Reference 1 defines Safety Significant functions as those:

1) Based on a qualitative evaluation in a hazard analysis:
   a) Whose failure is estimated to result in a worker fatality or acute injury that would result in medical treatment for immediately life-threatening or permanently disabling injuries from hazards other than ones that are routinely encountered in general industry and construction and for which national consensus codes or standards exist to guide safe design and operation.
   b) Required to prevent the exposure to a worker as the result of process component failure when the concentration of hazardous material in an occupied area, as determined by uniform distribution of the total released material in the occupied area, would exceed ERPG-3 (Emergency Response Planning Guideline) or would exceed Hazard Category 3 thresholds for radionuclides (as defined in DOE Standard 1027) unless the radiological consequences can be shown by quantitative analysis to be acceptable per Chapter 9.
2) Based on a quantitative analysis, required to ensure that any credible event shall not result in a release that is either (1) in excess of 29 CFR 1910.119 threshold quantities or (2) would exceed the Onsite Hazardous Material Criteria (Chapter 9) to workers not covered by the evaluation for criterion 1 above.
3) Required to prevent, monitor, or detect a nuclear criticality accident even if that accident would not directly impact worker safety.
4) Required to provide a supporting function to ensure the above Safety Significant functions can be provided or to ensure that the required Safety Significant function is not prevented.
5) Required to ensure that operating parameters are kept within the Technical Safety Requirements that are required to ensure the above Safety Significant criteria are met.
6) Required to ensure that the minimum number of levels of control as identified in Table 4.2-2 are met.

In addition to the SSCs required to address these criteria, some SSCs were chosen based on management decision to obtain further dose reduction. These SSCs include the following:

- 221-S Shielded Viewing Windows
- LPPP Crane Operator Station

The Safety Significant structures, systems, and components are listed in Table 4.4-1 along with a listing of each safety function and functional requirement. More detailed component listings are provided in the System Design Descriptions (SDDs). Tables 9.3-10 and 9.3-11 provide a listing of the accidents for which the Safety Significant SSCs are providing protection. A more detailed discussion of these systems and structures is provided below.

4.4.1 CHEMICAL PROCESS CELL PRIMARY PURGE SYSTEM

4.4.1.1 Safety Function

The CPC Primary Purge System prevents explosions in the SEFT, SRAT, SME, SMECT, PRFT, MFT, RCT, and DWTT (see Subsection 4.3.7) and the connected vent piping.

4.4.1.2 System Description

The major safety significant components comprising the CPC Primary Purge System are listed below and are outlined in Figure 4.3-4.

- Air compressors
- Air receiver tank
- Ambient Vaporizers (located at 422-S)
- Liquid Nitrogen Storage Tank (located at 422-S)
- Various pressure and flow control valves
- Air dryers
- Purge Hanford connector and jumpers
- Piping and valves

The CPC Primary Purge System provides an air/nitrogen purge to the Safety Class CPC/SPC Vessels (see Subsection 4.3.7) and is backed up by the safety class CPC Safety Grade Nitrogen Purge System (see Subsection 4.3.8). The purge system provides the purge through the vessels to the PVVH, which exhausts into the Zone 1 exhaust tunnel. When the primary purge system pressure drops below normal operating limits, redundant pressure control valves will open to initiate CPC Safety Grade Nitrogen purge flow (see Subsection 4.3.8) to the header.

The primary source of CPC/SPC purge flow utilizes air compressors, an air receiver tank, air dryers, nitrogen tank, vaporizer, and various pressure and flow control valves. Normally, one air compressor is in operation to charge the air receiver tank. Air dryers are installed to remove moisture from the purge air (a non-credited function). Normally, one air dryer will be in service, however, the dryers may be bypassed with no impact to the system's functional requirement as specified in Table 4.4-1. In-series pressure control valves are downstream of the air receiver tank and are set to control the air purge header pressure.

The electrical equipment for the air compressors is not supplied with standby power; therefore, a loss of normal power will cause the loss of the air compressors. Because the air receiver tank and the supply line maintain some pressure inventory, the primary purge source will continue to

supply the purge header until the air pressure in the supply line decreases to allow the purge supply to the process vessels to become nitrogen-based.

Additionally, the CPC Primary Purge System provides a nitrogen source from Building 422-S. The nitrogen system provides liquid nitrogen to its vaporizer, which converts the liquid nitrogen to gaseous nitrogen. The gaseous nitrogen is delivered via the distribution piping through the purge jumpers to the Safety Class CPC/SPC Vessels.

The CPC Primary Purge System purge header and CPC Safety Grade Nitrogen purge header are connected and share the same inlet piping (safety class) to the process vessels. The required purge flow is provided through a manual purge flow valve (needle or globe valve).

Failure of the following SSC(s) could result in this SSC losing its ability to perform its required function(s):

- Vitrification Building (including the RPC Walls)
- CPC/SPC Vessels (SEFT, SRAT, SME, SMECT, PRFT, MFT, RCT, and DWTT)
- MPC Crane Structure
- RPC Cell Covers
- CMSD Structural Support
- CPC Removable Wall
- CPC/SPC Jumpers Above Purge Jumpers
- Non-Safety Related SSCs – Interaction Sources (piping, jumpers, or components identified as potential confined hydrogen sources)

4.4.1.3 System Evaluation

The CPC Primary Purge System is not required to meet the NPH criteria in Tables 4.2-1 and 4.2-3 since the safety function is only applicable to normal operations. The CPC Safety Grade Nitrogen System is used if an NPH event fails the CPC Primary Purge System.

Non-safety related piping, jumpers, or components were identified as potential confined hydrogen sources with the ability to cause failure of safety related equipment (Ref. 241 and 242). Based on a waiver to Manual E7, 2.25 (Ref. 243) to extend the seismic interaction criteria to include explosive interaction on safety SSCs, these identified sources may be classified as PS. The sources have been qualified to withstand pressures caused by hydrogen explosions without causing failure of safety related equipment. The Structural Integrity Program will ensure these sources retain this ability by ensuring material condition equal to or better than assumed in the structural evaluation. The Configuration Control Program will ensure changes to the technical baseline are properly assessed to ensure confined hydrogen locations, if created, are evaluated to determine if they can impact safety related equipment and if so are evaluated to confirm their ability to withstand a confined hydrogen explosion.

Functionality is assured through the implementation of the performance criteria identified in the TSRs or through the tests identified in Section 10.7 of this FSAR.

4.4.2 THROUGH 4.4.4 DELETED

4.4.5 221-S SHIELDED VIEWING WINDOWS

4.4.5.1 Safety Function

The 221-S shielded viewing windows provide shielding for the workers within the Vitrification Building (221-S).

4.4.5.2 System Description

The 221-S shielded viewing windows are designed as Category I. Shielded Viewing Windows are provided in the REDC, CDMC, MC, CDC, WTC, CDC Smear Test Station, Analytical Cell, Sample Cell, Mercury Purification Cell, and the Crane Maintenance Area for observing operations. Subsections 5.2.2.1 and 5.4.10.5 of this FSAR provide more discussion on the shielded viewing windows. The shielding design is described in Section 5.5 of this FSAR.

A more detailed design description is provided in the System Design Description VS-01 (Ref. 102).

Failure of the following SSC(s) could result in this SSC losing its ability to perform its required function(s):

- Vitrification Building (including the RPC Walls)
- Non-Safety Related SSCs – Interaction Sources (piping, jumpers, or components identified as potential confined hydrogen sources)

4.4.5.3 System Evaluation

The 221-S shielded viewing windows are Category I SSCs as defined in the System Design Description TP01 (Ref. 4), which meets the PC-2 NPH criteria in Tables 4.2-1 and 4.2-3.

Non-safety related piping, jumpers, or components were identified as potential confined hydrogen sources with the ability to cause failure of safety related equipment (Ref. 241 and 242). These sources may impact the 221-S shielded viewing windows and cause failure of their safety related function. The Radiological Protection Program will ensure the impact to the facility worker is mitigated in the event of 221-S shielded viewing window failure.

4.4.6 MELTER

4.4.6.1 Safety Function

The Melter maintains its integrity to contain its contents.

4.4.6.2 System Description

The Melter is located in the Melt Cell in the Vitrification Building (see Figure 1.2-4). A description of the Melter is provided in Subsection 5.2.3.3 of this FSAR. A profile view of the Melter within the Melt Cell is provided in Figure 1.2-11. Table 4.4-2 provides the vessel details.

More detailed design description is provided in the System Design Description GP02 (Ref. 105). Failure of the following SSC(s) could result in this SSC losing its ability to perform its required function(s):

- Vitrification Building (including the RPC Walls)
- MPC Crane Structure
- Melt Cell Crane Structure
- RPC Cell Covers
- Non-Safety Related SSCs – Interaction Sources (piping, jumpers, or components identified as potential confined hydrogen sources)

4.4.6.3 System Evaluation

The Melter and frame can withstand DBE ground accelerations that exceed the PC-2 NPH criteria in Tables 4.2-1 and 4.2-3 (Ref. 13, and 135). Since it is located within the Vitrification Building, it is protected from high winds.

Non-safety related piping, jumpers, or components were identified as potential confined hydrogen sources with the ability to cause failure of safety related equipment (Ref. 241 and 242). Based on a waiver to Manual E7, 2.25 (Ref. 243) to extend the seismic interaction criteria to include explosive interaction on safety SSCs, these identified sources may be classified as PS. The sources have been qualified to withstand pressures caused by hydrogen explosions without causing failure of safety related equipment. The Structural Integrity Program will ensure these sources retain this ability by ensuring material condition equal to or better than assumed in the structural evaluation. The Configuration Control Program will ensure changes to the technical baseline are properly assessed to ensure confined hydrogen locations, if created, are evaluated to determine if they can impact safety related equipment and if so are evaluated to confirm their ability to withstand a confined hydrogen explosion.

4.4.7 ACID DRAIN CATCH TANK DIKES

4.4.7.1 Safety Function

The dikes for the Acid Drain Catch Tank maintain their integrity to contain any leaked nitric acid.

4.4.7.2 System Description

The Acid Drain Catch Tank (see Subsection 4.4.11) is contained in a diked area. The diked volume is sufficient to contain the entire contents of the tank. The tanks and dikes in this area are segregated to prevent mixing of incompatible chemicals. More detailed design description is provided in the System Design Description SU14 (Ref. 36).

4.4.7.3 System Evaluation

Since the Acid Drain Catch Tank is NPH qualified to contain its contents, the dikes for the Acid Drain Catch Tank are not required to meet the NPH criteria in Tables 4.2-1 and 4.2-3. Therefore, the safety function is only applicable to normal operations.

4.4.8 DELETED

4.4.9 LOW POINT PUMP PIT PRIMARY PURGE SYSTEM

4.4.9.1 Safety Function

The LPPP Primary Purge System prevents explosions in the Sludge Pump Tank (SPT), the Precipitate Pump Tank (PPT), the Recycle Pump Tank (RPT), and the connected vent piping. This system maintains the hydrogen concentration below the Lower Flammability Limit (LFL) for hydrogen in the SPT and PPT and below the Composite Lower Flammability Limit (CLFL) in the RPT.

4.4.9.2 System Description

The major safety significant components comprising the LPPP Primary Purge System are listed below and outlined in Figure 4.4-10. The LPPP Primary Purge System consists of the following:

- Ambient vaporizers
- Liquid nitrogen storage tank (located at 422-S)
- Piping and valves
- Emergency Nitrogen Connection

The LPPP Primary Purge System, consisting of ambient vaporizers and liquid nitrogen storage tank (located east of 422-S), provides a nitrogen source. The nitrogen system provides liquid nitrogen to its vaporizer, which converts the liquid nitrogen to gaseous nitrogen. The gaseous nitrogen is delivered via the distribution piping through the purge jumpers to the vessels. Nitrogen to the SPT, PPT, and the RPT is routed through safety significant pressure reducing valves, piping, and local flow measuring instrumentation. Nitrogen gas may also be supplied from a vendor supplied tank truck and vaporizer at a connection in the nitrogen distribution piping.

The LPPP Primary Purge System does not rely upon electrical power. Table 4.4-2 provides the vessel details for the liquid nitrogen storage tank.

Subsection 5.3.2.8 of this FSAR also discusses the LPPP purges, and more detailed design description is provided in System Design Description SU11 (Ref. 15).

Failure of the following SSC(s) could result in this SSC losing its ability to perform its required function(s):

- Low Point Pump Pit Vessels
- Low Point Pump Pit Cells and Cell Covers
- Low Point Pump Pit Crane Structural Support / Superstructure
- 422-S Superstructure
- LPPP Jumpers Above Safety Significant Jumpers
- Non-Safety Related SSCs – Interaction Sources (piping, jumpers, or components identified as potential confined hydrogen sources)

4.4.9.3 System Evaluation

The LPPP Primary Purge System is not required to meet the NPH criteria in Tables 4.2-1 and 4.2-3 since the safety function is only applicable to normal operations. The LPPP Safety Grade Nitrogen System is used if an NPH event fails the LPPP Primary Purge System.

Non-safety related piping, jumpers, or components were identified as potential confined hydrogen sources with the ability to cause failure of safety related equipment (Ref. 241 and 242). Based on a waiver to Manual E7, 2.25 (Ref. 243) to extend the seismic interaction criteria to include explosive interaction on safety SSCs, these identified sources have been classified as PS. The sources have been qualified to withstand pressures caused by hydrogen explosions without causing failure of safety related equipment. The Structural Integrity Program will ensure these sources retain this ability by ensuring material condition equal to or better than assumed in the structural evaluation. The Configuration Control Program will ensure changes to the technical baseline are properly assessed to ensure confined hydrogen locations, if created, are evaluated to determine if they can impact safety related equipment and if so are evaluated to confirm their ability to withstand a confined hydrogen explosion.

Functionality is assured through the implementation of the performance criteria identified in the TSRs or through the tests identified in Section 10.7 of this FSAR.

4.4.10 DELETED

4.4.11 ACID DRAIN CATCH TANK AND PIPING

4.4.11.1 Safety Function

The Acid Drain Catch Tank and Piping maintain their integrity to contain their contents.

4.4.11.2 System Description

Table 4.4-2 provides the vessel details.

Subsection 5.4.13.1 of this FSAR also discusses the Acid Drain Catch Tank. A more detailed design description is provided in the System Design Description SU14 (Ref. 36).

Failure of the following SSC(s) could result in this SSC losing its ability to perform its required function(s):

- Vitrification Building

4.4.11.3 System Evaluation

The Acid Drain Catch Tank meets the PC-2 earthquake criteria in Tables 4.2-1 and 4.2-3 (Ref. 84). Since it is located within the Vitrification Building, it is protected from High Winds.

4.4.12 LOW POINT PUMP PIT CRANE OPERATOR STATION

4.4.12.1 Safety Function

The LPPP Crane Operator Station provides shielding for the workers within the Crane Operator Station.

4.4.12.2 System Description

The LPPP Crane Operator Station is located on the west side of the LPPP (see Figure 4.4-8). The concrete walls and roof along with the shielded viewing windows provide shielding for personnel within the room.

Subsection 5.3.2.8 of this FSAR also provides discussion of the Crane Operator Station. The shielding design is described in Section 5.5 of this FSAR. A more detailed design description is provided in System Design Description SU26 and IT03 (Ref. 7, 9).

Failure of the following SSC(s) could result in this SSC losing its ability to perform its required function(s):

- Non-Safety Related SSCs – Interaction Sources (piping, jumpers, or components identified as potential confined hydrogen sources)

4.4.12.3 System Evaluation

The LPPP Crane Operator Station is not required to meet the NPH criteria in Tables 4.2-1 and 4.2-3, since the safety function is only applicable to normal operations (i.e., the shielding is not a required safety function following an NPH event).

Non-safety related piping, jumpers, or components were identified as potential confined hydrogen sources with the ability to cause failure of safety related equipment (Ref. 241 and 242). Based on a waiver to Manual E7, 2.25 (Ref. 243) to extend the seismic interaction criteria to include explosive interaction on safety SSCs, these identified sources have been classified as PS. The sources have been qualified to withstand pressures caused by hydrogen explosions without causing failure of safety related equipment. The Structural Integrity Program will ensure these sources retain this ability by ensuring material condition equal to or better than assumed in the structural evaluation. The Configuration Control Program will ensure changes to the technical baseline are properly assessed to ensure confined hydrogen locations, if created, are evaluated to determine if they can impact safety related equipment and if so are evaluated to confirm their ability to withstand a confined hydrogen explosion.

4.4.13 FAILED EQUIPMENT STORAGE VAULT STRUCTURE

4.4.13.1 Safety Function

The Failed Equipment Storage Vault (FESV) structure provides a barrier to prevent a significant release from stored materials as well as providing shielding.

4.4.13.2 System Description

The FESV (260-S) structure consists of vaults constructed of reinforced concrete and designed as a Category I facility (Ref. 4). An outdoor gantry crane is provided for removing, transporting, and emplacing failed or unusable radioactive equipment. The FESV structure provides facilities for removing, transporting, and emplacing failed or unusable radioactive equipment. A description of the FESV structure is provided in Section 5.3.2.10 of this FSAR.

More detailed design description is provided in the System Design Description SU13 (Ref. 136).

There are no SSCs whose failure could result in this SSC losing its ability to perform its required function.

4.4.13.3 System Evaluation

The FESV vaults are Category I structures, as defined in the System Design Description TP01 (Ref. 4), which meets the PC-2 NPH criteria in Tables 4.2-1 and 4.2-3. The Load Lift Program ensures movement of loads in the FESV is conducted in a manner which minimizes the potential of damage to this safety related SSC due to load drops.

4.4.14 THROUGH 4.4.28 DELETED

4.4.29 FORMIC ACID FEED TANK AND PIPING

4.4.29.1 Safety Function

The Formic Acid Feed Tank and its associated piping maintain their integrity to contain their contents.

4.4.29.2 System Description

Table 4.4-2 provides the vessel details for the Formic Acid Feed Tank. Figure 1.2-10 shows the location of this tank.

Subsection 5.4.13.1 of this FSAR also discusses the Formic Acid Feed Tank. A more detailed design description is provided in the System Design Description CF01 (Ref. 20).

Failure of the following SSC(s) could result in this SSC losing its ability to perform its required function(s):

- Vitrification Building
- Non-Safety Related SSCs – Interaction Sources (piping, jumpers, or components identified as potential confined hydrogen sources)

4.4.29.3 System Evaluation

The Formic Acid Feed Tank meets the PC-2 earthquake criteria in Tables 4.2-1 and 4.2-3 (Ref. 39). Since it is located within the Vitrification Building, it is protected from the High Winds.

Non-safety related piping, jumpers, or components were identified as potential confined hydrogen sources with the ability to cause failure of safety related equipment (Ref. 241 and 242). Based on a waiver to Manual E7, 2.25 (Ref. 243) to extend the seismic interaction criteria to include explosive interaction on safety SSCs, these identified sources may be classified as PS. The sources have been qualified to withstand pressures caused by hydrogen explosions without causing failure of safety related equipment. The Structural Integrity Program will ensure these sources retain this ability by ensuring material condition equal to or better than assumed in the structural evaluation. The Configuration Control Program will ensure changes to the technical baseline are properly assessed to ensure confined hydrogen locations, if created, are evaluated to determine if they can impact safety related equipment and if so are evaluated to confirm their ability to withstand a confined hydrogen explosion.

Functionality is assured through the implementation of the performance criteria identified in the TSRs or through the tests identified in Section 10.7 of this FSAR.

4.4.30 DELETED

4.4.31 FORMIC ACID FEED TANK DIKES

4.4.31.1 Safety Function

The dikes for the Formic Acid Feed Tank (see Subsection 4.4.29) maintain their integrity to contain any leaked formic acid.

4.4.31.2 System Description

The Formic Acid Feed Tank (see Subsection 4.4.29) is contained in a diked area that drains to the organic acid drain catch tank. The diked volume is sufficient to contain the entire contents of the tank. The tanks and dikes in this area are segregated to prevent mixing of incompatible chemicals. Figure 1.2-10 shows the locations of the dike. Subsection 5.4.13.1 of this FSAR also discusses the dikes for the Formic Acid Feed Tank. More detailed design description is provided in the System Design Description CF01 (Ref. 20).

Failure of the following SSC(s) could result in this SSC losing its ability to perform its required function(s):

- Vitrification Building

4.4.31.3 System Evaluation

Since the Formic Acid Feed Tank is NPH qualified to contain its contents, the dikes for the Formic Acid Feed Tank are not required to meet the NPH criteria in Tables 4.2- 1 and 4.2-3. Therefore, the safety function is only applicable to normal operations.

4.4.32 DELETED

4.4.33 ORGANIC ACID DRAIN CATCH TANK AND PIPING

4.4.33.1 Safety Function

The Organic Acid Drain Catch Tank and Piping maintain their integrity to contain their contents.

4.4.33.2 System Description

Table 4.4-2 provides the vessel details.

Subsection 5.4.13.1 of this FSAR also discusses the Organic Acid Drain Catch Tank. A more detailed design description is provided in the System Design Description SU14 (Ref. 36).

Failure of the following SSC(s) could result in this SSC losing its ability to perform its required function(s):

- Vitrification Building

4.4.33.3 System Evaluation

The Organic Acid Drain Catch Tank meets the PC-2 earthquake criteria in Tables 4.2-1 and 4.2-3 (Ref. 84). Since it is located within the Vitrification Building, it is protected from High Winds.

Functionality is assured through the implementation of the performance criteria identified in the TSRs or through the tests identified in Section 10.7 of this FSAR.

4.4.34 ORGANIC ACID DRAIN CATCH TANK DIKES

4.4.34.1 Safety Function

The dikes for the Organic Acid Drain Catch Tank maintain their integrity to contain any leaked formic acid.

4.4.34.2 System Description

The Organic Acid Drain Catch Tank (see Subsection 4.4.33) is contained in a diked area. The diked volume is sufficient to contain the entire contents of the tank. The tanks and dikes in this area are segregated to prevent mixing of incompatible chemicals. More detailed design description is provided in the System Design Description SU14 (Ref. 36).

Failure of the following SSC(s) could result in this SSC losing its ability to perform its required function(s):

- Vitrification Building

4.4.34.3 System Evaluation

Since the Organic Acid Drain Catch Tank is NPH qualified to contain its contents, the dikes for the Organic Acid Drain Catch Tank are not required to meet the NPH criteria in Tables 4.2-1 and 4.2-3. Therefore, the safety function is only applicable to normal operations.

4.4.35 NITRIC ACID FEED TANK AND PIPING

4.4.35.1 Safety Function

The Nitric Acid Feed Tank and its associated piping maintain their integrity to contain their contents.

4.4.35.2 System Description

Table 4.4-2 provides the vessel details for the Nitric Acid Feed Tank. Figure 1.2-10 shows the location of this tank.

Subsection 5.4.13.1 of this FSAR also discusses the Nitric Acid Feed Tank. More detailed design description is provided in the System Design Description CF01 (Ref. 20).

Failure of the following SSC(s) could result in this SSC losing its ability to perform its required function(s):

- Vitrification Building
- Non-Safety Related SSCs – Interaction Sources (piping, jumpers, or components identified as potential confined hydrogen sources)

4.4.35.3 System Evaluation

The Nitric Acid Feed Tank meets the PC-2 earthquake criteria in Tables 4.2-1 and 4.2-3 (Ref. 84). Since it is located within the Vitrification Building, it is protected from High Winds.

Non-safety related piping, jumpers, or components were identified as potential confined hydrogen sources with the ability to cause failure of safety related equipment (Ref. 241 and 242). Based on a waiver to Manual E7, 2.25 (Ref. 243) to extend the seismic interaction criteria to include explosive interaction on safety SSCs, these identified sources may be classified as PS. The sources have been qualified to withstand pressures caused by hydrogen explosions without causing failure of safety related equipment. The Structural Integrity Program will ensure these sources retain this ability by ensuring material condition equal to or better than assumed in the structural evaluation. The Configuration Control Program will ensure changes to the technical baseline are properly assessed to ensure confined hydrogen locations, if created, are evaluated to determine if they can impact safety related equipment and if so are evaluated to confirm their ability to withstand a confined hydrogen explosion.

4.4.36 NITRIC ACID FEED TANK DIKES

4.4.36.1 Safety Function

The dikes for the Nitric Acid Feed Tank (see Subsection 4.4.35) maintain their integrity to contain any leaked nitric acid.

4.4.36.2 System Description

The Nitric Acid Feed Tank (see Subsection 4.4.35) is contained in a diked area that drains to the acid drain catch tank. The diked volume is sufficient to contain the entire contents of the tank. The tanks and dikes in this area are segregated to prevent mixing of incompatible chemicals. Figure 1.2-10 shows the locations of the dike. Subsection 5.4.13.1 of this FSAR also discusses the dikes for the Nitric Acid Feed Tank. More detailed design description is provided in the System Design Description CF01 (Ref. 20).

Failure of the following SSC(s) could result in this SSC losing its ability to perform its required function(s):

- Vitrification Building

4.4.36.3 System Evaluation

Since the Nitric Acid Feed Tank is NPH qualified to contain its contents, the dikes for the Nitric Acid Feed Tank are not required to meet the NPH criteria in Tables 4.2-1 and 4.2-3. Therefore, the safety function is only applicable to normal operations.

4.4.37 THROUGH 4.4.38 Deleted

4.4.39 INTERAREA TRANSFER LINES

4.4.39.1 Safety Function

The Safety Significant Core Lines of the Interarea Transfer Lines [i.e., Sludge, MST/Salt Solution, MST/Sludge Solids, Strip Effluent (SE), Decontaminated Salt Solution (DSS), Recycle and 512-S Filtrate lines] are constructed to contain their contents, including following a PC-2 earthquake or a detonation in the core pipe or jacket.

The Safety Significant Secondary Containment of the Interarea Transfer Lines [i.e., Sludge, MST/Salt Solution, MST/Sludge Solids, Strip Effluent (SE), Decontaminated Salt Solution (DSS), Recycle and 512-S Filtrate lines] support the Core Lines safety function by providing structural support.

The Safety Significant Secondary Containment of the Interarea Transfer Lines [i.e., Sludge, MST/Salt Solution, MST/Sludge Solids, DSS, Recycle and 512-S Filtrate lines] are constructed to contain their contents (i.e., provide gross containment) following a fire, a PC-2 earthquake, or a detonation in the core pipe or jacket caused by leaks from Sludge, MST/Salt Solution, MST/Sludge Solids, DSS, Recycle or 512-S Filtrate core lines.

The Safety Significant transfer line jumpers and Hanford connectors in the LPPP [i.e., Sludge, MST/Sludge Solids, and Recycle lines] are constructed to contain their contents, including following a PC-2 earthquake or a detonation in the jumper. A vulnerability exists with the sludge jumper from Tank 40 to contain its contents following an internal explosion due to the lack of qualification of the valve in the jumper. However, it is still credited to provide a minimal leak path following an internal explosion due to the robust design of the jumper.

The Safety Significant transfer line jumpers for the SE line are credited to contain their contents following a PC-2 earthquake.

The Safety Significant transfer line jumper connecting the LWPT to transfer line PCP4 is credited to contain its contents following a detonation in the transfer line jumper.

4.4.39.2 System Description

The Safety Significant Core Lines and Secondary Containment of the Interarea Transfer Lines contain their contents for the following system transfers:

- MST/Salt Solutions from H-Area to the LWPT in the 512-S Building
- MST/Sludge Solids from the LWPT in the 512-S Building to the LPPP-PPT
- MST/Sludge Solids from LPPP-PPT to 221-S
- 512-S Filtrate from the LWHT to MCU
- Sludge from Tank 40H to the LPPP-SPT
- Sludge from LPPP-SPT to 221-S
- Decontaminated Salt Solution (DSS) from MCU to Tank 50

- SE from H-Area to 221-S via the LPPP-RPT and PPT Cells
- Recycle waste from 221-S to LPPP-RPT
- Recycle waste from LPPP-RPT to HDB-8

The Safety Significant transfer line jumpers and Hanford connectors are credited to contain their contents, including following a PC-2 earthquake or a detonation in the jumper, for the following system transfers:

- MST/Sludge Solids into and out of the LPPP-PPT
- Sludge into and out of the LPPP-SPT (the sludge jumper from Tank 40 only provides minimal leak path following an internal explosion)
- Recycle into and out of the LPPP-RPT

The Safety Significant transfer line jumpers for SE in the LPPP-RPT and PPT Cells are credited to contain their contents following a PC-2 earthquake.

The Safety Significant transfer line jumper connecting the LWPT to transfer line PCP4 is credited to withstand an internal detonation in the jumper.

The Interarea Transfer Lines consist of lines with two 3-inch schedule 40 (some of the lines are schedule 10 in H-Area), type 304L stainless steel core transfer lines surrounded by a 10-inch, schedule 20 carbon steel jacket. Initially, the core lines from Tank 49 and the H-Area containing SE share a common jacket in route to the 512-S Building. Additionally, the core line from Tank 40 and the Filtrate and DSS return lines to H-Area also share a common jacket. At a point between the CST Facility and Building 512-S, these four lines enter a crossover jacket. In the crossover jacket, the sludge line from Tank 40 crosses over and enters the jacket containing the SE core line; the core line from Tank 49 crosses over and enters the jacket containing the 512-S Filtrate core line. Thus, the transfer line from H-Area containing SE and the sludge line from Tank 40 are contained in a common jacket from the crossover jacket to the LPPP. The core pipes for the 512-S feed from H-Area and the 512-S Filtrate return to H-Area are contained in a common jacket from the crossover jacket to the 512-S Building. The core line for sludge from the LPPP to the Vitrification Building is contained in a jacket shared with the core line containing SE also going to the Vitrification Building from the LPPP. Additionally, the core line for transporting the MST/Sludge Solids from the LPPP to the Vitrification Building is contained in a common jacket shared by the Recycle Stream from the Vitrification Building to the LPPP. The transfer line jackets are connected to Leak Detection Boxes (LDBs) located adjacent to the LPPP and 512-S. Figure 5.3-1 shows the layout of the Interarea Transfer Lines and jackets. Figure 5.3-2 shows a cross section of the Interarea Transfer Line. Interarea Transfer Lines and jackets are protected from external corrosion by a system of active and passive features including hydrophobic insulation, protective coatings, and impressed current cathodic protection. The primary means of protection is the hydrophobic insulation, while the other systems serve as additional defense against external corrosion (Ref. 286).

The transfer line jumpers and Hanford connectors in the LPPP and 512-S are constructed of similar materials as the core lines. The transfer line jumpers in the 512-S building are non safety jumpers, except the jumper connecting the LWPT to transfer line PCP4.

Subsection 5.3.2.7 of this SAR also discusses the Interarea Transfer Lines, and more detailed design description is provided in System Design Description (Ref. 35).

There are no SSCs whose failure could result in this SSC losing its ability to perform its required function.

4.4.39.3 System Evaluation

The Safety Significant Core Lines and Secondary Containment of the Interarea Transfer Lines (with the exception of the LDBs and associated piping and components) as well as the transfer line jumpers in the LPPP meet the PC-2 earthquake criteria in Tables 4.2-1 and 4.2-3 (Ref. 78, 79, 80, 81, 82, 214, 251, 254, 287, 288, 289, 290, 291, 294, 295, 296, 297, 298, and 299). For the transfer line jumpers in the LPPP, a dynamic leakage area of less than 0.05 square inches created by the DBE is determined in Reference 255. It is determined in Reference 254 that the leakage area would be elastic deformation and reseal following the DBE event, thus allowing negligible amounts of material to leak during the DBE and satisfying the safety function. The PC-2 High Winds criteria are met since these lines are underground except for a short portion at the Tank 40 valve box. The above ground portion is protected by a TSR Administrative Control at CST requiring independent verification that transfers are stopped and that actions are taken to assure siphoning is terminated (by double valve isolation or by isolation and venting) following a tornado/high wind warning or event as required by Section 9.4.2.14. The shielding design is described in Section 5.5 of this FSAR.

Since the transfer core line will withstand the effects of an internal or external detonation from hydrogen and/or solvent, a spill does not occur coincident with either a jacket or core line detonation in the mitigated scenario (Ref. 213). Reference 282 shows that the pressures developed from a hydrogen explosion bound those developed from an explosion of propanal, hexamethyldisiloxane (HMDSO), and trimethylsilanol (TMS). Therefore, conclusions in Reference 213 apply when antifoam degradation products (ADPs) organics are also considered in the recycle transfer core line. Additionally, the transfer line between Tank 40 and the LPPP-SPT is capable of withstanding the pressure transient (i.e., water hammer) caused by valve closure at the LPPP (Ref. 215). Since the other DWPF transfer lines of radiological concern (including H-Area to 512-S/LWPT, 512-S/LWPT to LPPP-PPT, LPPP-PPT to 221-S, LPPP-SPT to 221-S, H-Area to 221-S, 512-S/LWHT to H-Area, RCT to HDB-8 via LPPP) have no obstructions (e.g., valves), no specific analysis was required for these lines.

Additionally, a calculation has been performed (Ref. 226) that demonstrates that the above and below ground transfer line jackets, including the cross-over portion, can withstand the postulated detonation. Reference 282 shows that the pressures developed from a hydrogen explosion bound those developed from an explosion of propanal, HMDSO, and TMS. Therefore, conclusions in Reference 226 apply when ADP organics are also considered in the recycle transfer core line jackets. One exception to the secondary containment withstanding a detonation is if a leak from the SE core line takes place. The SE is acidic and not compatible with the carbon steel jacket,

which would lead to a compromise of the jacket integrity. In the event of a SE core line leak, which leads to an explosion, the adjacent core line is credited with withstanding that explosion.

The secondary containment also includes the LDBs with associated piping and components. It is recognized the LDBs with associated piping and components may not provide complete containment of transfer line and jacket material due to the designed leak detection box overflow line (drains to a cell) and lack of complete qualification of LDBs with associated piping and components (e.g., potential release into soil or high bay) for fires, explosions, and seismic events. Based on the robust nature of the core pipe as a preventive control, this secondary containment was determined to be an adequate mitigative control for these events to provide sufficient accident mitigation due to the tortuous paths and minimal openings.

The transfer line jumpers and Hanford connectors in the LPPP as well as the transfer line jumper connecting the LWPT to transfer line PCP4 have been shown to withstand a postulated detonation (except the SE jumpers and the sludge jumper from Tank 40) (Ref. 254). Reference 282 shows that the pressures developed from a hydrogen explosion bound those developed from an explosion of propanal, HMDSO, and TMS. Therefore, conclusions in Reference 254 apply when ADP organics are also considered in the LPPP-RPT jumpers. A vulnerability exists with the sludge jumper from Tank 40 to contain its contents following an internal explosion due to the lack of qualification of the valve in the jumper. However, it is still credited to provide a minimal leak path following an internal explosion due to the robust design of the jumper. The SE jumpers are not credited to contain their contents following an internal detonation. The transfer line jumpers in the LPPP are additionally credited to contain their contents during normal operations, with the exception of the SE jumper which is only required to contain its contents post DBE. A “drip-wise” leakage from the transfer line jumpers in the LPPP is considered acceptable to meet the safety function of containing contents as a “drip-wise” leak will not accumulate enough waste material to be a flammability concern in the LPPP sumps or be enough MAR to have a significant leak or spill consequence. “Drip-wise” leakage shall not be a continuous flow or spray of material.

4.4.40 422-S SUPERSTRUCTURE

4.4.40.1 Safety Function

The 422-S Superstructure supports the operation of the safety significant SSCs within the 422-S Area for II/I issues.

4.4.40.2 System Description

The Cold Chemical Storage Facility (422-S) is directly south and adjacent to the Service Building. The area contains safety significant SSCs located adjacent to the 422-S Superstructure. The superstructure is designed as a Category III structure as defined in System Design Description TP01 (Ref. 4).

A more detailed design description is provided in the System Design Description CF01 (Ref. 20).

There are no SSCs whose failure could result in this SSC losing its ability to perform its required function.

4.4.40.3 System Evaluation

The 422-S Superstructure meets the PC-2 Safety Significant DBE criteria in Tables 4.2-1 and 4.2-3 (Ref. 21). It was designed as a Category III structure as defined in the System Design Description TP01 (Ref. 4). Therefore, its design for wind exceeds the requirements for a PC-2 Safety Significant SSC in Tables 4.2-1 and 4.2-3.

4.4.41 SRAT/SME GAS CHROMATOGRAPHS AND ASSOCIATED INTERLOCKS

4.4.41.1 Safety Function

SRAT/SME gas chromatographs (GCs) provide an indication of the SRAT and SME vapor space flammable concentration during operations and initiate the following interlock functions:

High flammable concentration in the SRAT off-gas:

- Close steam, nitric acid, and formic acid addition valves

High flammable concentration in the SME off-gas:

- Close steam, nitric acid, and formic acid addition valves
- Stop the PFSFT transfer pump

4.4.41.2 System Description

SRAT/SME gas chromatographs (GCs) are used for the determination of the LFL concentrations in each of these process vessels. Both the SRAT and the SME have two GCs. A high LFL percentage indication will cause the actuation of hardwired interlocks. These interlocks command the SRAT and SME steam control valves and nitric/formic control valves to close. These interlocks also stop the PFSFT transfer pump.

More detailed design description is provided in the System Design Description CH01 (Ref. 100).

Failure of the following SSC(s) could result in this SSC losing its ability to perform its required function(s):

- Vitrification Building (including the RPC Walls)
- Non-Safety Related SSCs – Interaction Sources (piping, jumpers, or components identified as potential confined hydrogen sources)

4.4.41.3 System Evaluation

The SRAT/SME gas chromatographs, associated interlocks, steam and acid addition valves are not required to meet the NPH criteria in Tables 4.2-1 and 4.2-3 since the safety function is only applicable to normal operations.

Non-safety related piping, jumpers, or components were identified as potential confined hydrogen sources with the ability to cause failure of safety related equipment (Ref. 241 and 242). Based on a waiver to Manual E7, 2.25 (Ref. 243) to extend the seismic interaction criteria to include explosive interaction on safety SSCs, these identified sources may be classified as PS. The sources have been qualified to withstand pressures caused by hydrogen explosions without causing failure of safety related equipment. The Structural Integrity Program will ensure these sources retain this ability by ensuring material condition equal to or better than assumed in the structural evaluation. The Configuration Control Program will ensure changes to the technical baseline are properly assessed to ensure confined hydrogen locations, if created, are evaluated to determine if they can impact safety related equipment and if so are evaluated to confirm their ability to withstand a confined hydrogen explosion.

Functionality is assured through the implementation of the performance criteria identified in the TSRs or through the tests identified in Section 10.7 of this FSAR.

4.4.42 CPC PURGE FLOW METERS AND INTERLOCKS

4.4.42.1 Safety Function

The SRAT and SME purge flow meters initiate a safety significant hardwired interlock on low purge flow. SRAT and SME low flow initiates the following hardwired interlock functions:

Low SRAT purge flow:

- Close steam control valve
- Close nitric acid addition valve
- Close formic acid addition valve

Low SME purge flow:

- Close steam control valve
- Close nitric acid addition valve
- Close formic acid addition valve
- Stop the PFSFT transfer pump

4.4.42.2 System Description

The SRAT and SME low purge flow interlocks are actuated by a safety significant low flow switch that is integral to the safety class purge flow meter. Low purge flow may increase the likelihood of flammability and in the SRAT and SME will actuate hardwired interlocks to reduce

flammability by stopping formic and nitric acid addition, stopping the PFSFT transfer pump, and closing the steam control valves.

More detailed design description is provided in the System Design Description CH01 (Ref. 100).

Failure of the following SSC(s) could result in this SSC losing its ability to perform its required function(s):

- Vitrification Building (including the RPC Walls)
- Non-Safety Related SSCs – Interaction Sources (piping, jumpers, or components identified as potential confined hydrogen sources)

4.4.42.3 System Evaluation

The SRAT and SME purge flow meter elements are safety class to provide monitoring of the purge and maintain a pressure boundary as part of the Safety Grade Nitrogen Purge System (Section 4.3.8). The SRAT and SME safety class purge flow meters have an integral safety significant low purge flow switch that actuates hardwired interlocks based on the flow measured by the flow meter. The SRAT and SME low flow interlocks are not required to meet the NPH criteria in Tables 4.2-1 and 4.2-3 since the safety function is only applicable to normal operations.

Non-safety related piping, jumpers, or components were identified as potential confined hydrogen sources with the ability to cause failure of safety related equipment (Ref. 241 and 242). Based on a waiver to Manual E7, 2.25 (Ref. 243) to extend the seismic interaction criteria to include explosive interaction on safety SSCs, these identified sources may be classified as PS. The sources have been qualified to withstand pressures caused by hydrogen explosions without causing failure of safety related equipment. The Structural Integrity Program will ensure these sources retain this ability by ensuring material condition equal to or better than assumed in the structural evaluation. The Configuration Control Program will ensure changes to the technical baseline are properly assessed to ensure confined hydrogen locations, if created, are evaluated to determine if they can impact safety related equipment and if so are evaluated to confirm their ability to withstand a confined hydrogen explosion.

Functionality is assured through the implementation of the performance criteria identified in the TSRs or through the tests identified in Section 10.7 of this FSAR.

4.4.43 THROUGH 4.4.44 DELETED

4.4.45 LOW POINT PUMP PIT SAFETY GRADE PURGE SYSTEM

4.4.45.1 Safety Function

The LPPP Safety Grade Purge System prevents explosions in the SPT, the PPT, the RPT, and the connected vent piping. This system maintains the hydrogen concentration below the LFL for

hydrogen in the SPT and PPT and below CLFL in the RPT. This system maintains sufficient inventory to perform this function for a minimum of four days.

4.4.45.2 System Description

The major safety significant components comprising the LPPP Safety Grade Purge System are listed below, and are outlined in Figure 4.4-10.

- Ambient vaporizer
- Liquid nitrogen storage tank
- Nitrogen tank level instrumentation
- Piping and valves
- Flow meters (local)
- Pressure Indicators
- SPT/PPT/RPT Purge Hanford connectors and jumpers
- Chemical feed lines (only for SPT and PPT)

The LPPP Safety Grade Purge System, consisting of a safety significant ambient vaporizer and liquid nitrogen storage tank (located at the LPPP), provides a nitrogen source that initiates automatically in the event of loss of pressure in the safety significant LPPP Primary Purge System (see Subsection 4.4.9). The nitrogen system provides liquid nitrogen to its vaporizer, which converts the liquid nitrogen to gaseous nitrogen. The PCV's on the nitrogen tanks control the pressure in the liquid nitrogen tanks. The gaseous nitrogen is delivered via the distribution piping through the purge jumpers to the vessels. Nitrogen to the vessels is reduced through redundant safety significant pressure reducing valves, piping, and local flow measuring instrumentation. Nitrogen bottles can be connected to the chemical feed lines to provide an additional purge alternative to the SPT and PPT.

Subsection 5.3.2.8 of this FSAR also discusses the LPPP purges. More detailed design description is provided in the System Design Description SU11 (Ref. 15).

Failure of the following SSC(s) could result in this SSC losing its ability to perform its required function(s):

- LPPP Vessels
- LPPP Cells and Cell Covers
- LPPP Crane Structural Support / Superstructure
- LPPP Jumpers Above Safety Significant Jumpers
- Non-Safety Related SSCs – Interaction Sources (piping, jumpers, or components identified as potential confined hydrogen sources)

4.4.45.3 System Evaluation

Functionality is assured through the implementation of the performance criteria identified in the TSRs or through the tests identified in Section 10.7 of this FSAR. The LPPP Safety Grade Purge

System meets the PC-2 NPH criteria in Tables 4.2-1 and 4.2-3 (Refs. 15, 38, 88, 89, 90, 124, 125, 129, 133, 162-164, 166-170, 173, 253, 257, 258, 259, and 260).

Non-safety related piping, jumpers, or components were identified as potential confined hydrogen sources with the ability to cause failure of safety related equipment (Ref. 241 and 242). Based on a waiver to Manual E7, 2.25 (Ref. 243) to extend the seismic interaction criteria to include explosive interaction on safety SSCs, these identified sources have been classified as PS. The sources have been qualified to withstand pressures caused by hydrogen explosions without causing failure of safety related equipment. The Structural Integrity Program will ensure these sources retain this ability by ensuring material condition equal to or better than assumed in the structural evaluation. The Configuration Control Program will ensure changes to the technical baseline are properly assessed to ensure confined hydrogen locations, if created, are evaluated to determine if they can impact safety related equipment and if so are evaluated to confirm their ability to withstand a confined hydrogen explosion.

4.4.46 ZONE 1 VENTILATION SYSTEM

4.4.46.1 Safety Function

The Zone 1 Ventilation System has the Safety Significant function of mitigating the effects of internal radiological process events with a minimum Decontamination Factor (DF) of 200 by maintaining negative pressure in the Vitrification Building, which causes transport of airborne radionuclides from the process area through the Sand Filter. This function must be met following internal vessel explosions in the Vitrification Building.

4.4.46.2 System Description

The major Safety Significant components comprising the Zone 1 Ventilation System are listed below, and a simplified schematic is provided in Figure 4.4-6.

- Zone 1 exhaust fans
- Zone 1 exhaust fans inlet vane dampers
- Zone 1 exhaust fan suction damper
- Zone 1 exhaust fan discharge damper
- Zone 1 exhaust balancing dampers
- Zone 1 exhaust fan manual start switches
- Zone 1 supply fan interlock (including LCS 261A & B, contactors in MCCs B302 and B103)
- Zone 2 exhaust fan interlock (including LCS 261A & B, contactors in MCCs B703 and B803)
- Weld test cell exhaust fan interlock (including LCS 261A & B, contactors in MCCs B701 and B802)
- Sand Filter inlet plenum pressure transmitter and associated interlocks
- LCS 272
- Sand Filter

- Zone 1 Tunnel
- Zone 1 Exhaust Stack and Zone 1 Exhaust Duct

The Zone 1 Ventilation System provides ventilation for the areas with the highest contamination levels within the Vitrification Building. A description of how the various ventilation systems and zones are divided within the Vitrification Building is provided in Subsection 5.4.1.1 of this FSAR. Major Zone 1 areas include the following:

- Chemical Process Cell (CPC)
- Salt Process Cell (SPC)
- Melt Cell (MC)
- Remote Equipment Decontamination Cell (REDC)
- Remote Process Cell Plenum (RPCP)
- Analytical Cell
- Sample Cell
- Weld Test Cell (WTC) (supply only for the WTC).

The Zone 1 Exhaust System is used to remove and filter air from Zone 1 areas. Air removal is accomplished by routing Zone 1 exhaust air (except the WTC exhaust) through the Zone 1 Tunnel and through the Sand Filter.

The Sand Filter is located west of the Vitrification Building. The Sand Filter is a Category I structure made of reinforced concrete. Ventilation air from the Vitrification Building process cells (Zone 1) is pulled through the Zone 1 Tunnel and the Sand Filter by fans in the fan house. Air enters the Sand Filter underneath the filter bed through distribution troughs spaced along the length of the building. Air passes up through the graded filter bed to an open space at the top, just under the roof slab, and exits through the exhaust tunnel leading to the fan house, through the Zone 1 Exhaust Duct, and out the Zone 1 Exhaust Stack. Graded layers of rock, gravel, and sand are placed in the Sand Filter to remove particulates carried by the ventilation air. A stainless steel grating placed over the lateral air distribution troughs supports the filter media.

The Zone 1 Tunnel is a Category I structure made of reinforced concrete. Two underground inlet air tunnels from the Vitrification Building merge into one underground tunnel that connects to the Sand Filter. One exhaust air tunnel, partially underground and partially above ground, connects the Sand Filter to the Fan House. The Zone 1 Exhaust Stack is a steel exhaust stack constructed on a concrete foundation.

Each exhaust fan is equipped with a manually controlled suction damper located in the suction piping and a variable inlet vane damper that allows the quantity of air supplied to the fan to be controlled. The discharge damper opens if the respective fan is operating or closes if the fan is shutdown without dependence on electrical power or instrument air. The inlet vane control damper fails open on loss of instrument air and/or loss of control signal. All supply fans shut down if normal power fails. Zone 1 exhaust fans receive power from the diesel generators (see Section 4.4.47) upon loss of normal power. On a loss of power, one fan on each bus will receive a start signal from LCS 272 within 30 seconds of power restoration. The Zone 1 supply fans,

Zone 2 exhaust fans, and WTC exhaust fans are interlocked to shut down if the pressure in the Sand Filter inlet plenum rises above a set maximum value.

A description of the Zone 1 Ventilation System is provided in Subsection 5.4.1.1 and 5.3.2.1. More detailed design description is provided in the System Design Description PV01 (Ref. 5).

Failure of the following SSC(s) could result in this SSC losing its ability to perform its required function(s):

- Vitrification Building (including the RPC Walls)
- Diesel Generator System
- Diesel Fuel Oil System
- Fan House Structure
- Fan Room Monorail Hoist and Structural Hoist

4.4.46.3 System Evaluation

The Zone 1Ventilation System meets the PC-2 earthquake criteria in Tables 4.2-1 and 4.2-3 (Ref. 40-46, 96, 97, 115, 116, 122, 123, 138, 140, 141, 144-147, 149, 151-153, and 155-161). The Sand Filter and Zone 1 Tunnel are Category I structures as defined in Section 5.1 and Ref. 4. See Ref. 77 for the Zone 1Exhaust Stack and Duct. The remainder of this SSC is within a Category I Structure as defined in Section 5.1 and Ref. 4, with the exception of the High-High Plenum Pressure interlock, which is located in a Category III structure as defined in Reference 4. Therefore, the design for wind meets the PC-2 requirements in Tables 4.2-1 and 4.2-3.

Reference 281 demonstrates the ability of Zone 1 Ventilation system to perform its safety function following internal vessel explosions in the Vitrification Building.

Functionality is assured through the implementation of the performance criteria identified in the TSR or through the tests identified in Section 10.7 of this FSAR.

4.4.47 DIESEL GENERATOR SYSTEM

4.4.47.1 Safety Function

The Diesel Generator System, including the associated electrical feed systems, supplies power to the Zone 1 Exhaust Fans (see Subsection 4.4.46) to support the Safety Significant functions of the Zone 1 Ventilation System during a loss of normal power. The diesel generator system also supplies power to the diesel support systems.

During a loss of normal power, at least one of the diesel generators (DG100 or DG200) must start and support the required Safety Significant loads. The diesel electrical system must remain operable if a load fault occurs. If a bus fault occurs, the corresponding diesel generator will shut down and not return to service.

4.4.47.2 System Description

The Diesel Generator System is located in the Fan House Structure (see Subsection 4.4.49). The major Safety Significant components comprising the Diesel Generator System consist of the following:

- Jacket water system
- Lube oil system (including Lube Oil Makeup Tank and piping/valves to each diesel generator)
- Air start system for each diesel generator
- Engine control system (relays and governor)
- Generator control system (relays and voltage regulators)
- Protective relays (protective/permissive)
- Piping and valving
- Breakers
- DC distribution system
- 2-hr fire resistant cable enclosure

Each system is equipped with a diesel generator unit and auxiliary equipment, including a fuel storage and transfer system (see Subsection 4.4.48), instrumentation, controls, indication, distribution, and annunciation.

There are two Diesel Generators (DGs), each rated at 2,000 kW with air driven starting motors and redundant voltage regulators. Each system contains an air start system to supply adequate air for two automatic start cycles with adequate air supply remaining to allow an additional manual start attempt (Ref. 61). The two DGs provide a standby source of 480 VAC power to secondary substation load centers B9 and B10.

On a loss of normal 13.8 kV power, undervoltage relays start the DGs. The DG output breakers close after achieving speed and voltage. DG100 feeds Load Center B9, and DG200 feeds Load Center B10.

The 125 VDC distribution system provides power to the required DC electrical loads. These loads include breaker control power for load centers B9 and B10 and diesel generator logic circuitry. The 125 VDC battery charger, which is fed from a DG bus, normally provides power to the distribution cabinet, which supplies the distribution panel. The battery charger also supplies a trickle charge to the battery bank, which is also connected to the distribution cabinet. When power to the battery charger is lost, the battery bank automatically supplies power to the distribution cabinet. Battery banks D41 and D51 provide control power to the DGs and provide power to open and close the 480 V breakers in the distribution system.

The batteries in D41 and D51 are procured as safety related components. Replacement batteries may either be procured to the required functional classification or backfit per E-BFA-S-00001, Battery Units for D41 and D51 Battery Bank (Ref. 283).

The major Safety Significant loads for the diesel generators are the following:

- Y95 Panel
- L130 Panel
- D42 Battery Charger
- D52 Battery Charger
- LCS 272
- Diesel Generator Radiator Fans
- Diesel Generator Fuel Oil Transfer Pumps
- LCS-210
- Zone 1 Exhaust Fans

Load Centers B9 and B10 supply these systems as well as other non-safety systems. After a loss of power, some loads on Load Centers B7 and B8 will be automatically brought on line by the DCS. Some smaller loads are energized as soon as the DGs are connected to the bus. Other larger loads are sequenced on to prevent overloading the DGs.

The Diesel Generators and Safety Significant loads are protected from load faults of other loads (safety or non-safety). The coordination of the overcurrent protection ensures isolation of potential faults that could be placed on the diesel generator output. Protective setting of the circuit breakers, which include breakers feeding B7 and B8 from B9 and B10, will ensure that faulted loads will not result in loss of emergency standby power (Reference 204, 209). Load Center breakers acting as electrical isolation devices or feeding safety significant equipment are controlled by the Nuclear Maintenance Management Program (TSR Administrative Control 5.8.2.8).

Fuel is supplied through the Diesel Fuel Oil System (see Subsection 4.4.48).

Figure 4.4-7 shows the location of the diesel generator rooms and electrical rooms within the Fan House. Subsection 5.4.2 provides more discussion on this system, and a more detailed design description is provided in the System Design Description SU17 (Ref. 6).

Failure of the following SSC(s) could result in this SSC losing its ability to perform its required function(s):

- Diesel Fuel Oil System
- Fan House Structure
- Generator Room Bridge Cranes and Structural Supports
- Fire Protection Piping above the Diesel Generator Systems
- Diesel Generator Room Heater Supports

4.4.47.3 System Evaluation

The Diesel Generator System meets the PC-2 earthquake criteria in Tables 4.2-1 and 4.2-3 (Ref. 6, 47, 48, 50, 95-97, 123, 140, and 141). This SSC is within a Category I Structure as defined in Section 5.1 and Ref. 4.

Functionality is assured through the implementation of the performance criteria identified in the TSR or through the tests identified in Section 10.7 of this FSAR.

4.4.48 DIESEL FUEL OIL SYSTEM

4.4.48.1 Safety Function

The Diesel Fuel Oil System supports the operability of the Diesel Generator System (see Subsection 4.4.47) by providing diesel fuel oil to the Diesel Generator System following the loss of offsite power. This system maintains sufficient inventory to perform this function for a minimum of 4 days.

4.4.48.2 System Description

The major Safety Significant components comprising the Diesel Fuel Oil System are listed below. The Diesel Fuel Oil System consists of the following:

- Fuel oil storage tanks
- Fuel oil day tanks
- Fuel oil transfer pumps
- Piping and valves
- LCS-210
- Fuel oil header redundant heat activated isolation valves
- Manual start switch for each fuel oil pump

Each diesel engine has a 450-gallon-capacity diesel fuel oil day tank located in the east end of the respective diesel generator room (see Figure 4.4-7) within the Fan House (see Section 4.4.49). Refilling of the day tanks by a transfer pump in either of the underground storage tanks is provided. LCS-210 is credited with providing automatic control of fuel oil to the operable diesel generator day tank. However, because LCS-210 receives power from only one diesel generator (DG #2), and may not be powered from the operable diesel generator, a manual start switch is available for each fuel oil pump to provide a means for an operator to perform this credited function. The two 15,000 gallon capacity diesel fuel oil storage tanks are located underground, west of the Fan House. Fuel oil storage will be maintained at a level to provide 4 days of operation at 50% load for the operable DG.

A single fuel oil line from the storage tanks to the 292-S building contains redundant heat activated isolation valves to prevent an active single failure causing inadvertent isolation of the diesels from the fuel storage tanks.

Subsection 5.4.2 of this FSAR provides more discussion on this system, and a more detailed design description is provided in the System Design Description SU17, (Ref. 6).

Failure of the following SSC(s) could result in this SSC losing its ability to perform its required function(s):

- Diesel Generator System
- Fan House Structure
- Generator Room Bridge Cranes and Structural Supports
- Fire Protection Piping above the Diesel Generator Systems
- Diesel Generator Room Heater Supports

4.4.48.3 System Evaluation

The Diesel Fuel Oil System meets the PC-2 earthquake criteria in Tables 4.2-1 and 4.2-3 (Ref. 6, 48, 50, 97, 123, 140, 141, 144, 164, 199, and 200). Part of this SSC is within a Category I structure as defined in Section 5.1 and Ref. 4. The remainder is underground.

Functionality is assured through the implementation of the performance criteria identified in the TSR or through the tests identified in Section 10.7 of this FSAR.

4.4.49 FAN HOUSE STRUCTURE

4.4.49.1 Safety Function

The Fan House Structure supports the operation of the Zone 1 Ventilation System by preventing its collapse from causing failure of the Zone 1 Ventilation System, Diesel Fuel Oil System, or the Diesel Generator System. The Fan House Structure must provide protection from the PC-2 winds for the safety significant SSCs within.

4.4.49.2 System Description

The Fan House Building (292-S) is a reinforced concrete structure designed as a Category I facility (Ref. 4). The general layout and arrangement are shown in Figure 4.4-7.

A description of the building is provided in Section 5.3.2.2 of this FSAR. More detailed design description is provided in the System Design Description TP01, PV06, FP02 (Ref. 4, 8, and 37).

There are no other SSCs whose failure could result in this SSC losing its ability to perform its required function.

4.4.49.3 System Evaluation

The Fan House Structure is a Category I structure as defined in Section 5.1 and Ref. 4.

Functionality is assured through the implementation of the performance criteria identified in the TSR or through the tests identified in Section 10.7 of this FSAR.

4.4.50 FAN HOUSE MAINTENANCE CRANES AND STRUCTURAL SUPPORT

4.4.50.1 Safety Function

The Fan House Maintenance Cranes and Structural Supports maintain the operation of the Safety Significant Systems beneath them by preventing the cranes collapse from causing their failure. There are four crane/hoist assemblies in the Fan House, two Generator Room Bridge Cranes and two hoists on the Fan Room Monorail.

4.4.50.2 System Description

The Fan House Maintenance Cranes are light-weight cranes located within the Fan House. The cranes include two Generator Room Bridge Cranes and a Fan Room Monorail with two hoists. They are used for maintenance on the Diesel Generator System and Fan Room components of the Zone 1 Ventilation System. The two hoists on the fan room monorail are each rated at 2 tons and the monorail and structural support is also evaluated at 2 tons. The two hoists are not operated simultaneously in order to prevent overloading of the monorail. When not in use or not required to be moved for maintenance purposes, the cranes are located away from the Generators and components of the Zone 1 Ventilation System so that any potential failure would not impact safety significant systems. The salient features of the Generator Room Bridge Cranes are a bridge suspended under two parallel structural members, a monorail hoist assembly suspended from the bridge and structural support. The salient features of the Fan Room Monorail Hoists consist of the monorail and structural support. The monorail and structural support are evaluated with the weight of both hoists plus the full capacity loading of one of the hoists. The generator room bridges and monorail hoists and the Fan Room Monorail hoists are analyzed to assure the structures do not fall during the DBE event (Ref. 210).

Failure of the following SSC(s) could result in this SSC losing its ability to perform its required function(s):

- Fan House Structure

4.4.50.3 System Evaluation

The Fan House Maintenance Cranes and Structural Support meets the PC-2 earthquake criteria in Tables 4.2-1 and 4.2-3 (Ref. 210). This SSC is within a Category I Structure as defined in Section 5.1 and Ref. 4.

Functionality is assured through the implementation of the performance criteria identified in the TSR or through the tests identified in Section 10.7 of this FSAR.

4.4.51 FIRE PROTECTION PIPING ABOVE THE DIESEL GENERATOR SYSTEMS

4.4.51.1 Safety Function

The Fire Protection Piping above the Diesel Generator Systems supports the operation of the Safety Significant Systems beneath it by preventing its collapse from causing their failure.

4.4.51.2 System Description

The Fire Protection Piping in the Fan House is located above portions of the Diesel Generator Systems and is therefore a II/I hazard.

More detailed design description is provided in the System Design Description FP03 (Ref. 106).

Failure of the following SSC(s) could result in this SSC losing its ability to perform its required function(s):

- Fan House Structure

4.4.51.3 System Evaluation

The Fire Protection Piping Above the Diesel Generator System meets the PC-2 earthquake criteria in Tables 4.2-1 and 4.2-3 (Ref.48). This SSC is within a Category I Structure as defined in Section 5.1 and Ref. 4.

Functionality is assured through the implementation of the performance criteria identified in the TSR or through the tests identified in Section 10.7 of this FSAR.

4.4.52 DIESEL GENERATOR ROOM HEATER SUPPORTS

4.4.52.1 Safety Function

The Diesel Generator Room Heater Supports support the operation of the Safety Significant Systems beneath it by preventing its collapse from causing their failure.

4.4.52.2 System Description

The Diesel Generator Room Heater Supports are located above portions of the Diesel Generator Systems and are therefore a II/I hazard.

Failure of the following SSC(s) could result in this SSC losing its ability to perform its required function(s):

- Fan House Structure

4.4.52.3 System Evaluation

The Diesel Generator Room Heater Supports System meets the PC-2 earthquake criteria in Tables 4.2-1 and 4.2-3 (Ref. 48). This SSC is within a Category I Structure as defined in Section 5.1 and Ref. 4.

Functionality is assured through the implementation of the performance criteria identified in the TSR or through the tests identified in Section 10.7 of this FSAR.

4.4.53 LOW POINT PUMP PIT VESSELS

4.4.53.1 Safety Function

The LPPP Vessels listed below must maintain their integrity to contain their contents and support the purging of their contents.

4.4.53.2 System Description

The Safety Significant LPPP vessels consist of the following:

- SPT
- PPT
- RPT

Figures 4.4-8 and 4.4-9 shows the locations of these vessels.

Subsection 5.3.2.8 of this FSAR provides more discussion on the vessels. More detailed design description is provided in the System Design Description IT01 (Ref. 35).

Failure of the following SSC(s) could result in this SSC losing its ability to perform its required function(s):

- LPPP Safety Grade Purge System
- LPPP Cells and Cell Covers
- LPPP Crane Structural Support / Superstructure
- Non-Safety Related SSCs – Interaction Sources (piping, jumpers, or components identified as potential confined hydrogen sources)

4.4.53.3 System Evaluation

The Low Point Pump Pit Vessels meet the PC-2 earthquake criteria in Tables 4.2-1 and 4.2-3 (Ref. 85 and 253). The vessels are located in PC-2 LPPP superstructures, vaults, and cell covers.

Non-safety related piping, jumpers, or components both internal and external to the vessels were identified as potential confined hydrogen sources with the ability to cause failure of safety related equipment (Ref. 241 and 242). For sources external to the vessels, the sources have been

qualified to withstand pressures caused by hydrogen explosions without causing failure of safety related equipment. The Structural Integrity Program will ensure these sources retain this ability by ensuring material condition equal to or better than assumed in the structural evaluation. The Configuration Control Program will ensure changes to the technical baseline are properly assessed to ensure confined hydrogen locations, if created, are evaluated to determine if they can impact safety related equipment and if so are evaluated to confirm their ability to withstand a confined hydrogen explosion. For sources internal to the vessels, it has been determined that the impact will not cause failure of their safety related function. This determination is based on the minimum wall thickness of the process vessels being adequate to sustain impact from hydrogen explosions without causing failure of the vessel (Ref. 245). The Configuration Control Program will ensure changes to the technical baseline are properly assessed to ensure the minimum wall thickness of the vessels is maintained. An explosion in the connected transfer lines and/or jumpers was identified as having the potential to result in a pressure wave to the vessels. This was evaluated and it was determined the vessels will not fail as a result of this event (Ref. 293).

Functionality is assured through the implementation of the performance criteria identified in the TSRs or through tests identified in Section 10.7 of this FSAR.

4.4.54 LOW POINT PUMP PIT CELLS AND CELL COVERS

4.4.54.1 Safety Function

The LPPP Cells and Cell Covers have the Safety Significant function of providing a barrier to prevent a significant release of materials from within the cells as well as providing shielding from the process.

The LPPP Cells and Cell Covers also have the Safety Significant function, due to II/I issues of supporting the operation of the LPPP Safety Grade Purge System and LPPP Vessels since their collapse could cause failure of the LPPP Safety Grade Purge System and LPPP Vessels.

4.4.54.2 System Description

The LPPP structure (Building 511-S) accommodates equipment for transferring sludge, MST/Sludge Solids, SE and recycled waste between the Vitrification Building, H-Area Tank Farm, and 512-S. Figures 4.4-8 and 4.4-9 show the layout of the LPPP. The LPPP cells are below-grade reinforced concrete structures consisting of three contiguous cells that are separated by shield walls and atmospherically connected through ventilation openings in the side walls of the center (recycle waste) cell. Each cell has seven removable concrete shield covers that form a barrier over the cell to protect and maintain the structural integrity of the cell and its contents. The cell covers are interlocked with the central cover being the “key” cover.

Subsection 5.3.2.8 of this FSAR provides more discussion on the LPPP cells and cell covers, and a more detailed design description is provided in the System Design Description IT03 (Ref. 9).

Failure of the following SSC(s) could result in this SSC losing its ability to perform its required function(s):

- Low Point Pump Pit Crane Structural Support / Superstructure

4.4.54.3 System Evaluation

The Low Point Pump Pit Cells and Cell Covers meet the PC-2 earthquake criteria in Tables 4.2-1 and 4.2-3 (Ref. 17, 142, and 292).

Functionality is assured through the implementation of the performance criteria identified in the TSRs or through the tests identified in Section 10.7 of this FSAR.

4.4.55 LOW POINT PUMP PIT CRANE STRUCTURAL SUPPORT / SUPERSTRUCTURE

4.4.55.1 Safety Function

The LPPP Crane Structural Support / Superstructure is designated as Safety Significant to support the operation of the Safety Significant Systems within the LPPP by preventing its collapse from causing their failure.

4.4.55.2 System Description

The LPPP Crane is an overhead crane (bridge and trolley) located within the LPPP building. When not in use or not required to be moved for maintenance purposes, the crane is located away from the LPPP cells so that any potential failure would not impact safety significant systems. The location of the crane is shown in Figure 4.4-8 and 4.4-9. The Safety Significant salient features of the LPPP Crane are its two bridge girders, girder end trucks, trolley assembly (including wheels and rails), and supporting superstructure. The LPPP Crane (including the bridge and trolley) is analyzed to assure it does not fall during the DBE event (Ref. 17, 18, 143, and 292).

Subsection 5.3.2.8 of this FSAR also discusses the LPPP Crane, and a more detailed design description is provided in the System Design Description VS03B, (Ref. 103).

There are no SSCs whose failure could result in this SSC losing its ability to perform its required function.

4.4.55.3 System Evaluation

The Low Point Pump Pit Crane Structural Support meets the PC-2 earthquake criteria in Tables 4.2-1 and 4.2-3 (Ref. 18 and 143). It was designed as a Category III structure as defined in the System Design Description TP01 (Ref. 4). Therefore, its design for wind loading exceeds the requirements for a PC-2 Safety Significant SSC in Tables 4.2-1 and 4.2-3.

Functionality is assured through the implementation of the performance criteria identified in the TSRs or through the tests identified in Section 10.7 of this FSAR.

4.4.56 GLASS WASTE STORAGE BUILDING VAULTS

4.4.56.1 Safety Function

The GWSB Vaults have the Safety Significant function of providing shielding for the workers within the GWSBs.

The GWSB Vaults also has a Safety Significant function, due to II/I issues of protecting the integrity of the filled canisters. The GWSB Vaults preclude damage to the stored canisters by remaining structurally intact (Ref. 217 and 227).

4.4.56.2 System Description

The GWSB Vault (250-S) (GWSB #1) is a reinforced concrete structure designed as a Category I facility (Ref. 4 and 278). The GWSB #2 Vault (251-S) is also a reinforced concrete structure and is designed as a Performance Category 2 facility (Ref. 221 and 222). The general layout and arrangement are shown in Figure 1.2-15 and 1.2-15a. A description of the vault is provided in Subsection 5.3.2.4 of this FSAR.

Decay heat from the filled canisters in the vault is removed by the natural circulation of air. Thermal distribution analysis (Ref. 216 and 277 for GWSB #1 and Ref. 223 for GWSB #2) for each vault confirmed that the natural circulation of air provides sufficient cooling without challenging the structural integrity of the vault.

The bounding heat generation per canister in GWSB #1 is defined to protect the structural integrity of the vault. The limiting steady state concrete temperature is 150 °F, and the four-day loss of flow limiting concrete temperature is 350 °F. The most limiting condition depends on whether the canisters are in a single stacked or double stacked configuration. The configuration of GWSB #1 (single or double stacked) is determined on a vault basis (note GWSB #1 is comprised of four vaults).

In a single stack configuration the more limiting condition is the four-days loss of flow condition analyzed in Reference 216. The analysis uses an average heat load of 460 watts per canister and shows that the vault ceiling concrete temperature will be 240 ºF after four days of interrupted flow. The analysis also determined that it would require an average heat load of 836 watts per canister to reach the 350 ºF concrete temperature limit.

In a double stack configuration the steady state concrete temperature limit of 150 °F is the more limiting condition analyzed in Reference 277. Reference 277 determines that all canisters with a heat generation per canister below 180 Watts per canister can be double stacked in any configuration. Canisters from sludge batches 1 through 8 all have a heat generation below 180 Watts per canister (Ref.279). Future sludge batches with a canister power greater than 180 Watts per canister will need to be evaluated using Reference 277.

The thermal analysis of the GWSB #2 vault, using an average heat load of 834 watts per canister, shows that the concrete temperature will increase, if natural ventilation is lost, over time to

350 °F (which is within code requirements) in a period of over four days (Ref. 224). The average thermal output of the remaining canisters, to be produced at DWPF, is less than 500 watts per canister (Ref. 225). Based on engineering judgment, four days is judged sufficient to establish a natural ventilation flow path given the layout / accessibility of the GWSB #2 and the predicted failure conditions after a DBE/DBT.

More detailed design description for GWSB #1 and GWSB #2 is provided in the System Design Description TP01, CS01, and CS05 (Ref 4, 11, and 222).

There are no SSCs whose failure could result in this SSC losing its ability to perform its required function.

4.4.56.3 System Evaluation

The GWSB #1 Vault is a Category I Structure as defined in Ref. 4 and 278 and the GWSB #2 vault is a Performance Category 2 Structure as defined in Ref. 221. Both GWSB vaults meet or exceed the PC-2 earthquake criteria in Tables 4.2-1 and 4.2-3.

Functionality is assured through the implementation of the performance criteria identified in the TSRs or through the tests identified in Section 10.7 of this FSAR.

4.4.57 GLASS WASTE STORAGE BUILDING CANISTER SUPPORTS

4.4.57.1 Safety Function

The GWSB Canister Supports protect the integrity of the filled canisters. The GWSB canister supports prevent the canisters from falling to the vault floor during a seismic event.

4.4.57.2 System Description

The galvanized GWSB #1 canister supports are PC-2 or equivalent structures (Ref. 4, 276). The galvanized GWSB #2 canister supports are PC-2 structures (Ref. 222). The supports are fabricated of large diameter pipe sections that serve as storage cavities. The standard openings are laid out in a grid pattern, and the canister casings are supported by a concrete mat. A description of the supports is provided in Subsection 5.3.2.4 of this FSAR. More detailed design description is provided in System Design Descriptions TP01, CS01, and CS05 (Ref. 4, 11, and 222).

Failure of the GWSB Vault could result in this SSC losing its ability to perform its required function(s).

4.4.57.3 System Evaluation

The Glass Waste Storage Building Canister Supports for GWSB #1 are PC-2 or equivalent Structures as defined in Ref. 4 and 276 and are PC-2 Structures for GWSB #2 as defined in Ref. 222. All of the GWSB Canister supports meets or exceeds the PC-2 earthquake criteria in Tables 4.2-1 and 4.2-3.

Functionality is assured through the implementation of the performance criteria identified in the TSRs or through the tests identified in Section 10.7 of this FSAR.

4.4.58 LOW POINT PUMP PIT JUMPERS ABOVE SAFETY SIGNIFICANT JUMPERS

4.4.58.1 Safety Function

The LPPP Jumpers Above Safety Significant Jumpers support the operation of the Safety Significant Systems beneath it by preventing its collapse from causing their failure.

4.4.58.2 System Description

The jumpers located above the safety significant jumpers are used for electrical or other support services to the LPPP process vessels. These jumpers are connected to the cell walls and vessels with Hanford Connector. The Hanford Connector is installed by using a motor driven impact wrench to close (engage) the jaws to the nozzle.

More detailed design description is provided in the System Design Description IT01 (Ref. 35).

Failure of the following SSC(s) could result in this SSC losing its ability to perform its required function(s):

- LPPP Cells and Cell Covers
- LPPP Crane Structural Support / Superstructure
- Non-Safety Related SSCs – Interaction Sources (piping, jumpers, or components identified as potential confined hydrogen sources)

4.4.58.3 System Evaluation

The Low Point Pump Pit Jumpers Above Safety Significant Jumpers are defined in Ref. 35 and meets or exceeds the PC-2 earthquake criteria in Tables 4.2-1 and 4.2-3 (Ref. 38, 255, 259). The jumpers located below grade are not directly exposed to a DBT.

During installation and removal of jumpers, there is a period of time between the time the jumper is set in place and when the Hanford Connector is closed. This is judged to be acceptable given the amount of time that the jumpers are in this configuration and the probability of a coincident DBE event.

Non-safety related piping, jumpers, or components were identified as potential confined hydrogen sources with the ability to cause failure of safety related equipment (Ref. 241 and 242). Based on a waiver to Manual E7, 2.25 (Ref. 243) to extend the seismic interaction criteria to include explosive interaction on safety SSCs, these identified sources have been classified as PS. The sources have been qualified to withstand pressures caused by hydrogen explosions without causing failure of safety related equipment. The Structural Integrity Program will ensure these sources retain this ability by ensuring material condition equal to or better than assumed in the structural evaluation. The Configuration Control Program will ensure changes to the technical

baseline are properly assessed to ensure confined hydrogen locations, if created, are evaluated to determine if they can impact safety related equipment and if so are evaluated to confirm their ability to withstand a confined hydrogen explosion.

Functionality is assured through the implementation of the performance criteria identified in the TSRs or through the tests identified in Section 10.7 of this FSAR.

4.4.59 SODIUM NITRITE FEED TANK DIKE AND DIKE DRAIN PLUG

4.4.59.1 Safety Function

The Sodium Nitrite Feed Tank Dike and Dike Drain Plug maintain their integrity to contain sodium nitrite leakage and prevent inadvertent drainage of sodium nitrite to the Floor Drain Catch Tank (FDCT) via the Regulated Drain Header.

4.4.59.2 System Description

The Sodium Nitrite Feed Tank is contained in a diked area. The diked volume is sufficient to contain the entire contents of the tank. Drainage from the diked area is prevented by a plug inserted through the dike wall penetration, which prevents flow to the Regulated Drain Header. More detailed design description is provided in the System Design Description CF01 (Ref. 20). These features will prevent the mixing of incompatible chemicals (i.e., sodium nitrite and acid).

4.4.59.3 System Evaluation

The safety function is only applicable to normal operations, therefore these features are not required to meet the NPH criteria in Tables 4.2-1 and 4.2-3.

4.5 REFERENCES

1. Conduct of Engineering and Technical Support. WSRC E7 Manual, Procedure 2.25, "Functional Classification," Rev. 3.

2. Resolution of DWPF's Safety Basis (U). WSRC-TR-94-0395, Rev. 2.

3. Design Criteria for Structures, Systems, and Components. Engineering Requirement, 01100-02-R, Rev. 0.

4. Seismic and Structural Design. System Design Description: G-SYD-S-00001, Rev. 0.

5. Zone 1 Ventilation System. System Design Description: G-SYD-S-00041, Rev. 5.

6. Backup Power. System Design Description: G-SYD-S-00023, Rev. 7.

7. Radiation Monitoring and Protection. System Design Description: G-SYD-S-00032, Rev. 5.

8. Fanhouse. System Design Description: G-SYD-S-00046, Rev. 1.

9. Pump Pit Structures. System Design Description: G-SYD-S-00051, Rev. 2.

10. Deleted.

11. GWSB Structure and Services. System Design Description: G-SYD-S-00068, Rev. 3.

12. Deleted.

13. Seismic (DBE) Evaluation of Melter and Related Equipment. BNI Calc.S350-014, Rev. 1.

14. Deleted.

15. Nitrogen Systems. System Design Description: G-SYD-S-00017, Rev. 9.

16. Deleted.

17. Seismic Evaluation of LP & Aux PP's. BNI Calculation S511-60, Rev. 1.

18. Pump Pit Struct. Steel. BNI Calculation S511-020, Rev. 1.

19. Deleted.

20. Cold Feed Chemicals. System Design Description: G-SYD-S-00047, Rev. 8.

21. Evaluation of DWPF Building 210-S for PC2 Seismic Event. T-CLC-S-00172, Rev. 0.

22. Savannah River Site Defense Waste Processing Facility Quality Assurance Manual. BD13675, D.W. Strohman to F.J. Leach, May 1991.

23. Quality Programs Overview and History (U). WSRC-RP-90-00593, July 1990.

24. Deleted.

25. Deleted.

26. Main Process Cell Crane and Misc. Runway Design. BNI Calculation S221-089, Rev. 4.

27. Ventilation Cover Design. BNI Calculation S221-077, Rev. 0.

28. Deleted.

29. Defense Waste Processing Facility Preliminary Hazards Analysis (U). WSRC-TR-94-0586, December 1994.

30. Deleted.

31. Preparation Guide for U.S. Department of Energy Nonreactor Nuclear Facility Safety Analysis Reports. DOE STD-3009-94, U.S. Department of Energy, Change Notice No. 3, March 2006.

32. Natural Phenomena Hazards Performance Categorization Criteria for Structures, Systems, and Components. DOE-STD-1021-93, U.S. Department of Energy, July 1993.

33. Natural Phenomena Hazards Design and Evaluation Criteria for Department of Energy Facilities. DOE-STD-1020-94, U.S. Department of Energy, April 1994.

34. Safety Class and Safety Significant Final Functional Classification Report for the Defense Waste Processing Facility (DWPF) (U). WSRC-TR-95-0189, Rev. 0.

35. Interarea Transfer Facilities. System Design Description: G-SYD-S-00050, Rev. 9.

36. Chemical Waste Treatment. System Design Description: G-SYD-S-00020, Rev. 4.

37. Fire Barriers. System Design Description: G-SYD-S-00003, Rev. 1.

38. 3-Inch Hanford Connector Results (U). T-ESR-S-00003, Rev. 0.

39. NPH Evaluation of Cold Chemical Feed Tanks (U). T-CLC-S-00060, Rev. 0.

40. Zone One Ventilation System (U). T-CLC-S-00003, Rev. 1.

41. Fan House Floor Response Spectra (U). T-CLC-S-00016, Rev. 1.

42. Exhaust Fans (U). T-CLC-S-00017, Rev. 0.

43. Zone 1 Ventilation System Exhaust Fan Ducts (U). T-CLC-S-00018, Rev. 0.

44. Fan Room Electrical Equipment (U). T-CLC-S-00019, Rev. 0.

45. Sand Filter Media Seismic Evaluation (U). T-CLC-S-00028, Rev. 0.

46. Exhaust Stack and Duct (U). T-CLC-S-00039, Rev. 0.

47. Seismic Fragilities of 480V Load Centers B9 and B10. T-CLC-S-00049, Rev. 0.

48. Diesel Generators (U). T-CLC-S-00020, Rev. 1.

49. Deleted.

50. Emergency Diesel Generator Piping Analysis (U). T-CLC-S-00027, Rev. 2.

51. Deleted.

52. Deleted.

53. Functional Design Criteria Zone 1 Upgrades for Increased Reliability. M-FDC-S-00004, Rev. 0.

54. Deleted.

55. Deleted.

56. Deleted.

57. Deleted.

58. Deleted.

59. Crane Maintenance Shield Door II/I Evaluation. T-CLC-S-00084, Rev. 0.

60. DWPF Mode C Probabilistic Safety Analysis (U). WSRC-TR-95-0198, June, 1995.

61. Diesel Generator Air Start System (U). OPS-DTE-950094, September 1995.

62. DWPF Technical Safety Requirements (U). WSRC-TS-95-0019/S-TSR-S-00001.

63. Deleted.

64. Deleted.

65. Design Authority Assessment of Safety Class Components for Environmental Qualification (EQ) Walkdown (U). WSRC-RP-95-1006, Rev. 0.

66. Deleted.

67. Deleted.

68. Construction Quality Control Instruction Manual. September, 1985.

69. Savannah River Construction Quality Control Manual. February, 1985.

70. Quality Assurance. DOE Order 5700.6A, August, 1981.

71. Quality Assurance. DOE Order 5700.6B, September, 1986.

72. Construction Quality Assurance Manual.

73. Construction Project Procedure.

74. Quality Assurance. DOE Order SR 5700.6C, February, 1987.

75. Deleted.

76. Deleted.

77. Wind Analysis of 291-S Exhaust Stack (U). ECS-EAT-96-0025, Rawls to Kerley, June, 1996.

78. Seismic Upgrade of Interarea Transfer Lines (U). S511-061, Rev. 0.

79. Stress Analysis of APP Bypass Line, Line B Zone 2 (U). M-CLC-S-00180, Rev. 2.

80. Stress Analysis of APP Bypass Line, Line E Zone 3 & 4 (U). M-CLC-S-00181, Rev. 1.

81. Stress Analysis of APP Bypass Line, Line D Zone 3 & 4 (U). M-CLC-S-00182, Rev. 2.

82. Stress Analysis of APP Bypass Line, Line A Zone 4 (U). M-CLC-S-00183, Rev. 1.

83. II/I Evaluation of Removable Wall (U). T-CLC-S-00119, Rev. 0.

84. NPH Review of Chemical Tanks. T-CLC-S-00120, Rev. 0.

85. DWPF Process Vessels Seismic Analyses (U). T-CLC-S-00125, Rev. 1.

86. Deleted.

87. Deleted.

88. TF5608 Vaporizer NPH Qualification (U). T-CLC-S-00087, Rev. 1.

89. DWPF Nitrogen Storage Tanks NPH Analysis (U). T-CLC-S-00088, Rev. 1.

90. Piping Analysis of Liquid N2 System from N2 Tank to Vaporizers (U). T-CLC-S-00089, Rev. 2.

91. Chemical Process Cell (CPC) Purge System Piping Analysis (U). T-CLC-S-00070, Rev. 5.

92. Deleted.

93. Deleted.

94. Deleted.

95. Batteries and Racks. T-CLC-S-00022, Rev. 4.

96. Load Centers B9 Room Electrical Equipment. T-CLC-S-00024, Rev. 3.

97. Additional Zone 1 Ventilation Equipment. T-CLC-S-00032, Rev. 1.

98. Deleted.

99. Deleted.

100. Sludge Feed Preparation System. System Design Description: G-SYD-S-00054, Rev. 14.

101. Deleted.

102. Vitrification Facility. System Design Description: G-SYD-S-00033, Rev. 4.

103. Remote Operation and Maintenance System. System Design Description: G-SYD-S-00035, Rev. 4.

104. Melter Off-gas System. System Design Description: G-SYD-S-00061, Rev. 6.

105. Melter and Associated Equipment. System Design Description: G-SYD-S-00060, Rev. 5.

106. Fire Water Systems. System Design Description: G-SYD-S-00004, Rev. 3.

107. Deleted.

108. Deleted.

109. Deleted.

110. Melt Cell Crane II/I Evaluation (U). T-CLC-S-00152, Rev. 0.

111. Deleted.

112. Melter Tank Jumper Piping PLA 242 and 255 (U). T-CLC-S-00177, Rev. 0.

113. Deleted.

114. Deleted.

115. DWPF Zone 1 Ventilation and Purge Gas Seismic II/I Evaluation (U). T-CLC-S-00118, Rev. 1.

116. Seismic Evaluation of Zone 1 Ventilation Path (U). T-CLC-S-00157, Rev. 0.

117. Design Authority Assessment of Safety Class Components for Environmental Qualification (EQ) Walkdown for J-DCP-S-97029 (SMECT Safety Class Purge) (U). HLW-DEN-98-0161, Rev. 0.

118. SMECT Purge Supply Backfit Package (U). WSRC-RP-98-00107, Rev. 0.

119. Deleted.

120. Defense Waste Processing Facility Facility Design Description (U). G-FDD-S-00001, Rev. 3.

121. Piping Analysis of Jumper 113(10) 10 on SMECT (U). T-CLC-S-00171, Rev. 1.

122. FOS 12 Room Equipment (U). T-CLC-S-00023, Rev. 1.

123. Load Center B10 Room Electrical Equipment (U). T-CLC-S-00025, Rev. 1.

124. Vitrification Building Process Cell Jumpers Analysis (U). T-CLC-S-00062, Rev. 3.

125. Low Point Pump Pit (LPPP) Purge System Piping Analysis (U). T-CLC-S-00076, Rev. 2.

126. Deleted.

127. Deleted.

128. Deleted.

129. Seismic Adequacy of Pressure Indicators (U). T-CLC-S-00085, Rev. 14.

130. Deleted.

131. Deleted.

132. Deleted.

133. Seismic Adequacy of Pressure Control Valves (U). T-CLC-S-00079, Rev. 8.

134. Deleted.

135. Seismic Fragility of Melter (U). T-CLC-S-00013, Rev. 0.

136. Failed Equipment Handling and Storage. System Design Description: G-SYD-S-00019, Rev. 0.

137. Concrete Cell Covers. S221-76, Rev. 1.

138. DWPF Sand Filter Seismic Performance (U). T-ESR-S-00001, Rev. 0.

139. Deleted.

140. 292S Raceway (U). T-CLC-S-00026, Rev. 1.

141. Essential Relay Seismic Review (U). T-CLC-S-00029, Rev. 4.

142. Pump Pit Precast Shield Covers. S511-43, Rev. 2.

143. Low Point Pump Pit Superstructure Seismic Evaluation (U). T-CLC-S-00040, Rev. 2.

144. Seismic Adequacy of Selector Switches (U). T-CLC-S-00093, Rev. 5.

145. Roof Supply Duct Evaluation (U). T-CLC-S-00102, Rev. 0.

146. Seismic Adequacy of Current Alarms (U). T-CLC-S-00104, Rev. 2.

147. Exhaust / Supply Fan MCC Qualification (U). T-CLC-S-00155, Rev. 0.

148. Deleted.

149. DWPF Essential Relays. T-ESR-S-00004, Rev. 2.

150. Deleted.

151. Seismic Analysis Report No. 385A. AB75355N-1, Rev. 0.

152. Seismic Calculations of NBD-53 Series Backdraft Dampers. AB67681C-10, Rev. 0.

153. Qualification Report. AB52743C-29, Rev. 2.

154. Deleted.

155. Fan House - Fan Room Floor. S292-04, Rev. 1.

156. Fan House - Building Foundation. S292-06, Rev. 0.

157. Shear Wall Design, S292-08. Rev. 0.

158. Basemat/Tunnel Level Walls. S221-51, Rev.1.

159. 1st Level Slab and Wall Design. S221-53, Rev. 0.

160. Seismic Stresses. S294-37, Rev. 2.

161. Sand Filter Inlet Tunnel. S294-47, Rev. 2.

162. Bulk Nitrogen Storage System (U). T-CLC-S-00034, Rev. 0.

163. Seismic Adequacy of Pressure Relief Valves (U). T-CLC-S-00080, Rev. 5.

164. Seismic Adequacy of Check and Manual Valves (U). T-CLC-S-00083, Rev. 23.

165. Deleted.

166. Seismic Adequacy of Manual Valves (U). T-CLC-S-00090, Rev. 1.

167. Seismic Adequacy of Flow Meters (U). T-CLC-S-00091, Rev. 9.

168. SPC and LPPP Piping Required for Pressure Boundary Integrity (U). T-CLC-S-00098, Rev. 2.

169. DWPF Purge Supply Evaluation (U). T-CLC-S-00147, Rev. 0.

170. DWPF OE, Jumper and Liquid Sampler Piping Analysis (U). T-CLC-S-00154, Rev. 1.

171. Deleted.

172. Deleted.

173. Seismic Adequacy of Plug and Needle Valves. T-CLC-S-00082, Rev. 4.

174. Seismic Adequacy of Filters (U). T-CLC-S-00092, Rev. 6.

175. Seismic Adequacy of Flow Elements (U). T-CLC-S-00130, Rev. 7.

176. Deleted.

177. Deleted.

178. Deleted.

179. Deleted.

180. Seismic Adequacy of Contact Push Button Units (U). T-CLC-S-00101, Rev. 4.

181. Vitrification Building 3rd Floor East Corridor Melter Cell KWW System Piping Analysis (U). T-CLC-S-00167, Rev. 2.

182. II/I Walkdown for J-DCP-S-97033 and SMECT (U). T-CLC-S-00176, Rev. 0.

183. Deleted.

184. Deleted.

185. Deleted.

186. Deleted.

187. Deleted.

188. Deleted.

189. Deleted.

190. Deleted.

191. Deleted.

192. Deleted.

193. Deleted.

194. Deleted.

195. Deleted.

196. Deleted.

197. Deleted.

198. Deleted.

199. Seismic Adequacy of Heat Activated Valves (U). T-CLC-S-00095, Rev. 1.

200. DG Tanks (U). T-CLC-S-00021, Rev. 1.

201. Deleted.

202. Deleted.

203. Deleted.

204. Protective Device and Relay's Coordination and Setting Studies (U). E13 (E-CLC-S-00030), Rev. 8.

205. Design of Missile Shielding of Nitrogen Pad North of DWPF. T-CLC-S-00194, Rev. 2.

206. CPC/SPC Purge Piping Tornado Missile Protection (U). T-CLC-S-00195, Rev. 1.

207. Bollard Design for Tornado Missile Protection. T-CLC-S-00196, Rev. 0.

208. Deleted.

209. Breaker Fuse Coordination Study. EPDD-HLW-94-0279, July 1994.

210. Monorail Evaluation. S292-20, March 1986.

211. 512-S Facility Consolidated Hazard Analysis (U). WSRC-TR-2002-00223, Rev. 6.

212. Conduct of Engineering and Technical Support. WSRC E7 Manual, Procedure 2.25, "Functional Classification," Rev. 13.

213. Evaluation of the High Level Waste Transfer Piping System for Potential Explosion Loads (U). T-CLC-H-00662, Rev. 0.

214. Transfer Line Piping Analysis (U). T-CLC-S-00142, Rev. 1.

215. Tank 51/40 To LPP Sludge Tank Transient Analysis. M-CLC-S-00613, Rev. 2.

216. Natural Convection Cooling of the Glass Waste Storage Building. M-CLC-A-00188, Rev. 2.

217. GWSB Structural Analysis. T-CLC-S-00109, Rev. 0.

218. Deleted.

219. Deleted.

220. Deleted.

221. SRS Engineering Standards Manual, Standard 01060, Structural Design Criteria. WSRC-TM-95-1, Rev. 88.

222. Glass Waste Storage Building #2 (GWSB#2) - 251-S. System Design Description Structure & Services (CS-05) (U): G-SYD-S-00077, Rev. 3.

223. GWSB #2 Canister Vault Natural Cooling Calculation (U). M-CLC-S-00742, Rev. 2.

224. GWSB #2 Canister Vault Interrupted Flow Calculation (U). M-CLC-S-00743, Rev. 3.

225. Elder, H.H. and Macias, D. Radiological Isotopic Loading and Canister Thermal Loading for GWSB #2. WSRC-TR-2003-00134, Rev 0.

226. Hydrogen Explosion- In Select Transfer Lines (U). T-CLC-S-00238, Rev. 4.

227. II/I Evaluation of GWSB #2 Vault for Postulated Superstructure Collapse. T-CLC-S-00244, Rev. 0.

228. Deleted.

229. HLW Backfit Analysis Package – Safety Class Controls for Receipt of Strip Effluent Stream into DWPF. J-BFA-S-00001, Rev. 0.

230. HLW Backfit Analysis Package – Precipitate Reactor Feed Tank (PRFT) CO2 Purge Jumper. M-BFA-S-00001, Rev. 0.

231. Deleted.

232. Deleted.

233. Design Change Package – Reference: MT-WD-2005-00016, Rev. 2: Safety Controls for Waste Transfer Line project. J-DCP-S-06003, Rev. 2.

234. Deleted.

235. Deleted.

236. Deleted.

237. Deleted.

238. Short, B.T. Siphon Break Holes Size Confirmation for PCP-48-249-3" in the PPT Reactor Feed Tank (PRFT) in 221-S. M-CLC-S-00757, Rev. 1.

239. Deleted.

240. Deleted.

241. Townsend, J.D. and McCord, J.B. Consolidated Hazards Analysis for Resolution of PISA: PI-05-006-NI-DWPF-05-001, Unanalyzed Hydrogen Vapors Impacts (U). WSRC-TR-2006-00417, Rev. 1.

242. Defense Waste Processing Facility (DWPF) Evaluation and Disposition of Low Risk Flammable Vapor Explosions Due to Trapped Hydrogen Summary Report. WSRC-TR-2006-00297, Rev. 4.

243. Potvin, M.M. E7 Manual Waiver Request Extending Seismic Interaction Criteria to Potential Trapped Hydrogen Locations. E7-018.

244. Deleted.

245. Antaki, G. Hydrogen Explosion – Fragment Penetration (U), T-CLC-S-00234, Rev. 1.

246. Deleted.

247. DWPF SEFT Transfer Pump VFD Evaluation. M-CLC-S-00753, Rev. 2.

248. DWPF PRFT Transfer Pump VFD Evaluation. M-CLC-S-00752, Rev. 3.

249. Deleted.

250. Deleted.

251. DWPF Recycle Waste Transfer Core Line Backfit Analysis. M-BFA-S-00004, Rev. 0.

252. Decontamination Waste Treatment Tank and Recycle Collection Tank Backfit Analysis. M-BFA-S-00005, Rev. 0.

253. Low Point Pump Pit Recycle Pump Tank and Purge Jumper Backfit Analysis. M-BFA-S-00003, Rev. 0.

254. DWPF Inter-Area Transfer Line Jumpers. M-BFA-S-00002, Rev. 1.

255. LPPP Transfer Jumpers Pipe Stress Analysis. T-CLC-S-00314, Rev. 0.

256. Tornado Missile Shield Structure for Nitrogen Tank #6. T-CLC-S-00263, Rev. 1.

257. Seismic Qualification of LPPP-RPT, LPPP-PPT, and LPPP-SPT Purge Flow Instrumentation. T-CLC-S-00285, Rev. 1.

258. Pipe Stress Analysis for LPPP New RPT Purge and Upgrade Existing SPT and PPT Purge Lines. T-CLC-S-00288, Rev. 2.

259. LPPP Jumper Piping Seismic II/I Evaluation (U). T-CLC-S-00312, Rev. 1.

260. LPPP RPT Purge Pipe Support. C-CLC-S-00220, Rev. 3.

261. DWTT Purge Pipe Stress Evaluation. T-CLC-S-00290, Rev. 0.

262. RCT Purge Pipe Stress Analysis. T-CLC-S-00297, Rev. 1.

263. Supports for DWTT Piping. C-CLC-S-00217, Rev. 2.

264. Supports for RCT Piping. C-CLC-S-00223, Rev. 2.

265. Qualification of Spool Piece Connecting Existing MFT to DWTT & RCT Piping Systems. T-CLC-S-00311, Rev. 0.

266. Nitrogen Tank 6 Piping Analysis (U). T-CLC-S-00287, Rev. 1.

267. Purge Jumper Piping Analysis. T-CLC-S-00281, Rev. 1.

268. Seismic Qualification of MFT, SME, SRAT, DWTT, and RCT Purge Flow Instrumentation. T-CLC-S-00286, Rev. 3.

269. DWTT Purge Jumpers Seismic II/I. T-CLC-S-00293, Rev. 0.

270. RCT Purge Jumpers Seismic II/I. T-CLC-S-00298, Rev. 0.

271. DWPF RCT Purge Jumper Pipe Stress Analysis. T-CLC-S-00299, Rev. 0.

272. Decontamination Waste, CH-04. System Design Description: G-SYD-S-00057, Rev. 1.

273. Recycle Collection, CH-05. System Design Description: G-SYD-S-00058, Rev. 2.

274. DWPF SEFT Transfer Pump Variable Frequency Drive Evaluation (with Recirculation Line). M-CLC-S-00791, Rev. 0.

275. SRS Engineering Standards Manual, WSRC-TM-95-1.

276. GWSB-1 Double Stack Canister Support Evaluation, C-CLC-S-00303, Rev. 1.

277. Heat Transfer Analysis of Double Stacking of Canisters in the Glass Waste Storage Building #1, M-CLC-S-00819, Rev. 1.

278. GWSB-1 Basemat Load Capacity Evaluation for Double Stacked Canisters, C-CLC-S-00305, Rev. 0.

279. Interim Canister Storage – Double Stack (ICS-DS) Canister Handling Strategy (CHS) For Vault A of Glass Waste Storage Building 1 (GWSB1), SRR-WSE-2015-00036, July 2015.

280. Consolidated Hazards Analysis for Defense Waste Processing Facility (DWPF), U-CHA-S-00006, Rev. 1.

281. Assessment of Vessel Explosion Impacts on the Defense Waste Processing Facility Zone 1 Ventilation System, U-ESR-S-00014, Rev. 2.

282. DWPF CPC Vessels Explosions in CPC Vessels – Gas Dynamics, SRRA005200-000025, Rev. B (19258-18-C-001 Rev. 2).

283. Battery Units for D41 and D51 Battery Bank, E-BFA-S-00001, Rev. 1.

284. Conduct of Engineering and Technical Support. WSRC E7 Manual, Procedure 2.25, "Functional Classification," Rev. 14.

285. Conduct of Engineering and Technical Support. Manual E7, Procedure 2.25A, "LW Functional Classification," Rev. 1.

286. Evaluation of Potential for Materials Degradation of DWPF Safety Class and Safety Significant Components (U). WSRC-TR-95-0385, Rev. 0.

287. Pipe Stress Evaluation of Underground Waste Transfer Line Connected to Near Low Point Pump Pit from SWPF Tie-in. T-CLC-S-00270, Rev. 2.

288. Seismic Evaluation of DWPF Transfer Line for SDP 24/25. T-CLC-S-00278, Rev. 3.

289. Seismic Evaluation of DWPF Transfer Lines for PCP4 and RCZ20. T-CLC-S-00279, Rev. 4.

290. SDI-511-S Piping Analysis of WTL from LPPP to SWPF. T-CLC-S-00337, Rev. 1.

291. Line C Piping Analysis (U). T-CLC-S-00127, Rev. 1.

292. PC-2 Evaluation of Low Point Pump Pit (LPPP) Concrete Cells (U). T-CLC-S-00305, Rev. 2.

293. Low Point Pump Pit (LPPP) (511-S) - Effect on Tanks of a Hydrogen Explosion in an Interconnected Transfer Line. M-CLC-S-00859, Rev. 0.

294. Stress Analysis of APP Bypass Line, Line B Zone 2 (U). M-CLC-S-00180, Rev. 2.

295. Stress Analysis of APP Bypass Line, Line E Zones - 3/4 (U). M-CLC-S-00181, Rev. 1.

296. Transfer Line Elbow Reinforcement Evaluation. T-CLC-S-00283, Rev. 1.

297. U.G. Piping Supports & Foundations @ LPPP (511-S) for SWPF Tie-in (SDI). C-CLC-S-00216, Rev. 1.

298. LPPP Recycle Tank Jumper Piping 7-9 (SPP2)2 Analysis. T-CLC-S-00342, Rev. 1.

299. LPPP Tank Jumper 26-6 (SPP3)2 Analysis. T-CLC-S-00345, Rev. 1.

Table 4.2-1 Safety Class and Safety Significant Performance Categories (Ref. 3)

Functional Classification	Performance Category
Safety Class	PC-3
Safety Significant (Note 1)	
Criterion 1a	PC-1
Criterion 1b	PC-2
Criterion 2	PC-2
Criterion 3	PC-1
Criterion 4	Note 2
Criterion 5	Note 2
Criterion 6	PC-2 (Note 3)

Note 1: The criteria numbers refer to the criteria given in Section 4.4.

Note 2: The Performance Category is based on the category of the function that is being supported.

Note 3: DOE Standard 1021-93 requires one of the levels of control to be seismically qualified. This upgrades the classification from PC-1 to PC-2.

Table 4.2-2 Safety Significant Minimum Number of Levels of Control (Ref. 1)

Number of Levels of Control	Hazardous Material Levels or Exposures
2	greater than ERPG-3; 100 rem or greater than Safety Class Criterion
1	greater than ERPG-2; greater than 25 rem
0	less than ERPG-2; less than 25 rem

The following are added to the above as applicable:

Level of Control	Condition
Add 1	If there is sufficient energy in the process material to result in an unacceptable event (e.g., explosion)
Add 1	If the geometry of the hazardous material must be maintained (e.g., geometry of radiological material maintained to prevent critical mass, two reactive chemicals separated to prevent explosion)

Table 4.2-3 Natural Phenomena Hazard Criteria*

Performance Category	**Design Basis Earthquake (DBE)** **Maximum Horizontal Ground Surface Accelerations** **(g)**	**Design Basis Wind and Tornado (DBT)** **Fastest-Mile Wind Speeds at 10m Height** **Wind** **(mph)**	 **Tornado** **(mph)**
PC-3	0.18	- Missile Criteria 2x4 timber plank 15 lb @ 50 mph (horiz.); max. height 30 ft.	137 Missile Criteria 2x4 timber plank 15 lb @ 100 mph (horiz.); max. height 150 ft.; 70 mph (vert.) 3 in. dia. std. steel pipe, 75 lb @ 50 mph (horiz.); max. height 75 ft., 35 mph (vert.)
PC-2	0.13	78 **	-
PC-1	0.10	78	-

* See DOE Standard 1020-94 for more details

** Importance Factor of 1.07 to be applied.

Table 4.2-4 Design Requirements for Safety Class Items

Design Requirements	6430.1A References	Remarks
1 DBE Resistance (See Table 4.2-3)	0111-99.0.1 0111-99.0.4	Safety functions must not be compromised by seismic events up to and including the design basis earthquake (DBE) for the site.
2 DBT Resistance (See Table 4.2-3)	0111-99.0.1 0111-99.0.2	Safety functions must not be compromised by the design basis tornado (DBT) for the site.
3 PMF Resistance	0111-99.0.1 0111-99.0.3	Safety functions must not be compromised by the probable maximum flood (PMF) for the site.
4 PMP Resistance	0111-99.0.1	Safety functions must not be compromised by the probable maximum precipitation (PMP) for the site.
5 Explosion/Fire Resistance	0111-99.0.1 0111-99.0.6	Safety functions must not be compromised by external fires or explosions (including the effects of explosion generated missiles).
6 Single Active Failure Resistance	1300-3.3 1540-99.0.1 1530-99.0	Applies to active mechanical items. Assured by providing redundancy, independence, separation, and/or diversity.
7 Equipment Environment Consideration	1300-3.4	Safety class items must be qualified to function under the most limiting accident conditions of interest at end of life.
8 Class 1E Requirements	1660-99.0.1	Apply to the design of safety class electrical systems and components.
9 ASME Sect. III or Other Applicable Requirements	1300-3.2	Apply to the design of safety class piping, pumps, and pressure vessels.
10 QA Requirements	1300-3.2	Additional QA requirements are applied to safety class items to ensure that they will perform as designed.
11 Internal Hazard Resistance	0111-99.0.1 0111-99.0.7 1330-3.4	Safety functions must not be compromised by internal hazards including missiles, fires, explosions, smoke, fire suppression agents, flooding, and damage caused by non-safety class items (II/I).
12 Maintenance Requirements	1300-3.5	Safety class items shall be designed to allow inspection, maintenance, and testing to ensure their continued functioning, readiness for operation, and accuracy.
13 Test Requirements	1300-3.6	Safety class items shall be designed to include appropriate provisions for periodic testing. This testing must be capable of being performed in-place, on a regular schedule, and under simulated emergency conditions.

Table 4.3-1 Safety Class Structures, Systems, and Components

Safety Class SSC	Safety Class Function	Safety Class Functional Requirement
Vitrification Building (221-S) and RPC Walls	Maintains its structural integrity to prevent damage to Safety Class process vessels and purge systems, and support the MPC Crane. Safety Significant Function: The RPC Walls also have the safety significant function of providing shielding for the workers within the Vitrification Building. The Vitrification Building, including the Remote Process Cell (RPC) Walls, supports the Zone 1 Ventilation System airflow configuration.	Maintain its confinement throughout the DBT and DBE in order to prevent damage to Safety Class process vessels and purge systems, and support the MPC Crane. Safety Significant: Providing shielding for the workers within the Vitrification Building and supports the Zone 1 Ventilation System airflow configuration.
CPC/SPC Vessels (PRFT, SEFT, SRAT, SME, SMECT, MFT, RCT and DWTT)	The CPC/SPC Vessels must maintain their structural integrity to support the purging of their contents. Safety Significant Function: The CPC/SPC Vessels must maintain their integrity to contain their contents.	The CPC/SPC Vessels must maintain their structural integrity to support the purging of their contents. Safety Significant Function: The CPC/SPC Vessels must maintain their integrity to contain their contents.
CPC Safety Grade Nitrogen Purge System	Prevent explosions in the PRFT, SEFT, SRAT, SME, SMECT, MFT, RCT, and DWTT and the connected vent piping.	To prevent explosions in the PRFT, SEFT, SRAT, SME, SMECT, MFT, RCT and DWTT and the connected vent piping. These systems maintain the vessels' vapor spaces below the CLFL.
Liquid Nitrogen Storage Tanks		To supply sufficient nitrogen to the purge system for 4 days without any dependence on electrical power.
Nitrogen Level Instrumentation		To provide indication of the nitrogen inventory in the liquid nitrogen tanks.
Ambient Vaporizers		To supply sufficient nitrogen flow to the purge system to maintain the CPC/SPC vessels non-flammable.
Piping and valves		To provide a pathway for the nitrogen to the CPC/SPC vessels.

Table 4.3-1 Safety Class Structures, Systems, and Components (Continued)

Safety Class SSC	Safety Class Function	Safety Class Functional Requirement
Flow meters (local)		To provide an indication of the purge flow to the vessels.
Purge Flow Valves (Manual Purge Flow Valves [needle or globe valves])		To provide an ensured purge flow to the CPC/SPC vessels.
Pressure Control Valves		To regulate the upstream pressure required for the flow elements.
Purge Hanford Connectors and Jumpers		To provide a pathway for the purge to the CPC/SPC vessels and ensure the flow path remains intact following a DBE.
Tornado missile shield		To protect the CPC Safety Grade Nitrogen Purge System from tornado missiles.
PRFT Dip Leg Siphon Break	The PRFT Dip Leg Siphon Break prevents siphons from the PRFT to the LPPP	The PRFT Dip Leg Siphon Break prevents siphons from the PRFT to the LPPP
Main Process Cell Crane Structure	Support the operation of the Safety Class Systems within the process cells by preventing its collapse from causing their failure.	To support the operation of the Safety Class Systems within the process cells by preventing its collapse from causing their failure.
RPC Cell Covers	Support the operation of the Safety Class Systems within the process cells by preventing its collapse from causing their failure.	To support the operation of the Safety Class Systems within the process cells by preventing its collapse from causing their failure.
CMSD Structural Support	Support the operation of the Safety Class Systems within the process cells by preventing its collapse from causing their failure.	To support the operation of the Safety Class Systems within the process cells by preventing its collapse from causing their failure.
CPC Removable Wall	Support the operation of the Safety Class Systems within the process cells by preventing its collapse from causing their failure.	To support the operation of the Safety Class Systems within the process cells by preventing its collapse from causing their failure.
CPC/SPC Jumpers Above the Safety Class Jumpers	Support the operation of the Safety Class Systems beneath it by preventing its collapse from causing their failure.	To support the operation of the Safety Class Systems beneath it by preventing its collapse from causing their failure.

Table 4.3-1 Safety Class Structures, Systems, and Components (Continued)

Safety Class SSC	Safety Class Function	Safety Class Functional Requirement
Melt Cell Crane Structure	Supports the operation of the Safety Class Systems beneath it by preventing its collapse from causing their failure.	To support the operation of the Safety Class Systems beneath it by preventing its collapse from causing their failure.
SEFT/PRFT Temperature Instrumentation and Associated Interlocks	Provide indication of the tank liquid temperature and interlock the transfer pump, sample pump and tank agitator on high temperature to prevent a flammable condition	To provide indication of the tank liquid temperature and interlock the transfer pump, sample pump and tank agitator on high temperature to prevent a flammable condition
RTD Elements (Liquid)		Provide indication of liquid temperature in the SEFT/PRFT.
Thermocouples		Contain the RTDs to ensure the capability to provide an indication of liquid temperature.
Electrical Jumpers		Transmit temperature indication provided by the RTDs.
Wall Penetrations		Maintain integrity to support transmission of SEFT/PRFT liquid temperature indication.
Wall Termination Boxes		Maintain integrity to support transmission of SEFT/PRFT liquid temperature indication.

Table 4.3-1 Safety Class Structures, Systems, and Components (Continued)

Safety Class SSC	Safety Class Function	Safety Class Functional Requirement
SRAT Temperature and Steam Flow Instrumentation and Associated Interlocks	Provides indication of the tank liquid temperature and steam flow and interlocks off the SEFT and PRFT feed flow to the SRAT through the transfer pumps/orifices on low steam flow or temperature to prevent flammable condition in the SRAT and prevent carry over of Isopar L to down stream vessels	To provide indication of the tank liquid temperature and steam flow and interlocks off the SEFT and PRFT feed flow to the SRAT through the transfer pumps/orifices on low steam flow or temperature to prevent flammable condition in the SRAT and prevent carry over of Isopar L to down stream vessels
SEFT/PRFT Waste Transfer Orifices		Limit the feed flow to the SRAT from the SEFT or PRFT to 10 gpm at normal pump speed.
SRAT Temperature Instrumentation		Provide indication of the SRAT liquid temperature.
SRAT Steam Flow Instrumentation		Provide indication of the SRAT steam flow.
Critical Plant Air Check Valves		Prevent the possibility of steam flowing into the air system and bypassing the SRAT.
Stream Piping Downstream of Flow Elements Including the Canyon Jumper		Maintain integrity to ensure steam flow to the SRAT is as indicated by steam flow instrumentation.
SEFT/PRFT Agitator Power Monitors and Associated Interlocks	Provide indication of agitator power and interlock off the SEFT and PRFT transfer pumps to ensure the contents of the SEFT and PRFT are well mixed during transfers to the SRAT. This will prevent a higher than analyzed organic concentration that may lead to a flammable condition in the SRAT and possible carryover of the Isopar L to process vessels downstream of the SRAT	To provide indication of agitator power and interlock off the SEFT and PRFT transfer pumps to ensure the contents of the SEFT and PRFT are well mixed during transfers to the SRAT. This will prevent a higher than analyzed organic concentration that may lead to a flammable condition in the SRAT and possible carryover of the Isopar L to process vessels downstream of the SRAT.

Table 4.3-2 Safety Class Vessels

Safety Class Tank	Location	Equipment #	Material of Construction	Dimensions / Shape	Construction Type
SEFT	CPC	S350-195-020	C-276	18' tall, 12' dia. flat bottom, dished top	ASME Sect. VIII, Div. 1, No Code Stamp
SRAT	CPC	S350-150-010	C-276	18' tall, 12' dia. flat bottom, dished top	ASME Sect. VIII, Div. 1, No Code Stamp
SME	CPC	S999-350-150-10-EV	C-276	18' tall, 12' dia. flat bottom, dished top	ASME Sect. VIII, Div. 1, No Code Stamp
SMECT	CPC	S350-150-040	316L Stainless Steel	18' tall, 12' dia. flat bottom, dished top	ASME Sect. VIII, Div. 1, No Code Stamp
MFT	CPC	S350-170-010	C-276	18' tall, 12' dia. flat bottom, dished top	ASME Sect. VIII, Div. 1, No Code Stamp
PRFT	SPC	S350-150-060	C-276	17' tall, 11' dia. flat bottom, dished top	ASME Sect. VIII, Div. 1, No Code Stamp
RCT	CPC	S395-030-010-00-T	C-276	18' tall, 12' dia. flat bottom, dished top	ASME Sect. VIII, Div. 1, No Code Stamp
DWTT	CPC	S395-030-020-00-EV	316L Stainless Steel	18' tall, 12' dia. flat bottom, dished top	ASME Sect. VIII, Div. 1, No Code Stamp
Liquid N2 Storage Tank	221-S	S422-150-078-00-T	Nickel Steel (Inner) Carbon Steel (Outer)	369" x 114"	ASME Section VIII Code Stamp
Liquid N2 Storage Tank	221-S	S422-150-080-00-T	Nickel Steel (Inner) Carbon Steel (Outer)	369" x 114"	ASME Section VIII Code Stamp
Liquid N2 Storage Tank	221-S	S422-150-082-00-T	Nickel Steel (Inner) Carbon Steel (Outer)	369" x 114"	ASME Section VIII Code Stamp
Liquid N2 Storage Tank	221-S	S422-150-084-00-T	Nickel Steel (Inner) Carbon Steel (Outer)	369" x 114"	ASME Section VIII Code Stamp
Liquid N2 Storage Tank	221-S	S422-150-086-00-T	Nickel Steel (Inner) Carbon Steel (Outer)	369" x 114"	ASME Section VIII Code Stamp
Liquid N2 Storage Tank	221-S	S422-150-088-00-T	SA340 Type 304 SS (Inner) Carbon Steel (Outer)	348" x 114.2"	ASME Section VIII Code Stamp

Table 4.3-3 Safety Class Evaluations

Vitrification Building and Remote Process Cell Walls (Section 4.3.1)			
Design Requirements		**Requirements Met**	**Basis / References**
1	DBE Resistance	Yes	Category I Structure as defined in Section 5.1 and Reference 4. Meets or exceeds the NPH criteria for PC-3 criteria.
2	DBT Resistance	Yes	Category I Structure as defined in Section 5.1 and Reference 4. Meets or exceeds the NPH criteria for PC-3 criteria.
3	PMF Resistance	Not Applicable	Refer to Section 3.4.2.1.
4	PMP Resistance	Not Applicable	Refer to Section 3.4.2.1.
5	Explosion/Fire Resistance	Not Applicable	No external explosions/fires identified as a hazard for this SSC.
6	Single Active Failure Resistance	Not Applicable	
7	Equipment Environment Consideration	Yes	The Structural Integrity Program assures that the design characteristics for normal operations are maintained.
8	Class 1E Requirements	Not Applicable	
9	ASME Sect. III or Other Applicable Requirements	Not Applicable	
10	QA Requirements	Yes	DOE Order 6430.1A requires that the design of safety class items be performed under a program that meets the requirements of NQA-1. The standard applied in qualifying this SSC is that the level of quality assurance should meet the intent of the requirements for items important to safety in a commercial nuclear power plant. The DWPF quality assurance program used for design is comparable to the requirements of NQA-1 (Ref. 22 and 23), which is also the standard used in the design of commercial nuclear power plants. Therefore, the design of this SSC is deemed to have been performed with an appropriate level of quality assurance.
11	Internal Hazard Resistance	Yes	The vitrification building and RPC walls are shown to withstand CPC cell overpressures caused by an internal CPC vessel explosion in Reference 281. No other internal hazards are identified for this SSC.
12	Maintenance Requirements	Not Applicable	Passive Structure.
13	Test Requirements	Not Applicable	Passive Structure

Table 4.3-3 Safety Class Evaluations (Continued)

CPC/SPC Vessels (PRFT, SEFT, SRAT, SME, SMECT, MFT, RCT, and DWTT) (Section 4.3.7)			
Design Requirements		**Requirements Met**	**Basis / References**
1	DBE Resistance	Yes	Ref. 85 and 252. See Section 4.3.8.
2	DBT Resistance	Not Applicable	This SSC is within a Category I Structure as defined in Section 5.1 and Ref. 4.
3	PMF Resistance	Not Applicable	Refer to Section 3.4.2.1.
4	PMP Resistance	Not Applicable	Refer to Section 3.4.2.1.
5	Explosion/Fire Resistance	Not Applicable	The potential hazards other than the hazards due to Non-Safety Related SSCs – Interaction Sources that could prevent this SSC from performing its function are already designated as Safety Class concerns. See Section 4.3.7 for evaluation of the potential hazards due to confined Hydrogen in Non-Safety Related SSCs – Interaction Sources.
6	Single Active Failure Resistance	Not Applicable	Passive feature
7	Equipment Environment Consideration	Yes	The Structural Integrity Program assures that the design characteristics for normal operations are maintained.
8	Class 1E Requirements	Not Applicable	
9	ASME Sect. III or Other Applicable Requirements	Yes	DWPF Vessels have not been designed nor built to the requirements of ASME Section III but more appropriately to Section VIII, Div. 1. Section VIII is the appropriate Section for the vessel application at DWPF and is consistent with the scope of paragraph U-1, Section VIII, i.e. pressures below 3000 psi, etc. These vessels will be maintained in accordance with quality assurance design controls as specified in Section 12.4.2.
10	QA Requirements	Yes	DOE Order 6430.1A requires that the design of safety class items be performed under a program that meets the requirements of NQA-1. The standard applied in qualifying this SSC is that the level of quality assurance should meet the intent of the requirements for items important to safety in a commercial nuclear power plant. The DWPF quality assurance program used for design is comparable to the requirements of NQA-1 (Ref. 22 and 23), which is also the standard used in the design of commercial nuclear power plants. Therefore, the design of this SSC is deemed to have been performed with an appropriate level of quality assurance.
11	Internal Hazard Resistance	Not Applicable	Although this SSC has not been qualified for the worst possible internal explosion, the Safety Class purge system will preclude the explosion from occurring. See Section 4.3.7 for evaluation of the potential hazards due to Non-Safety Related SSCs – Interaction Sources.
12	Maintenance Requirements	Yes	The vessels which require maintenance allow for the performance of maintenance, repair, or replacement.
13	Test Requirements	Not Applicable	

Table 4.3-3 Safety Class Evaluations (Continued)

Chemical Process Cell Safety Grade Nitrogen Purge System (Section 4.3.8)			
Design Requirements		**Requirements Met**	**Basis / References**
1	DBE Resistance	Yes	Ref. 15, 38, 88, 89, 90, 91, 100, 121, 124, 129, 133, 162, 164, 166, 167, 169, 173-175, 205, 206, 207, 261, 262, 263, 264, 265, 266, 267, 268, and 271.
2	DBT Resistance	Yes	Part of this System is within a Category I Structure as defined in Section 5.1 and Ref. 4. The tanks have been determined to not fail from high wind or missile strikes (Ref. 89). The remainder of the system located outside the vitrification building is protected by a tornado missile shield (Ref. 205, 206, 207, 256).
3	PMF Resistance	Not Applicable	Refer to Section 3.4.2.1.
4	PMP Resistance	Not Applicable	Refer to Section 3.4.2.1.
5	Explosion/Fire Resistance	Not Applicable	The potential hazards other than the hazards due to Non-Safety Related SSCs – Interaction Sources that could prevent this SSC from performing its function are already designated as Safety Class concerns. See Section 4.3.8 for evaluation of the potential hazards due to confined Hydrogen in Non-Safety Related SSCs – Interaction Sources.
6	Single Active Failure Resistance	Yes	See Section 4.3.8.
7	Equipment Environment Consideration	Yes	See Section 4.3.8.
8	Class 1E Requirements	Not Applicable	
9	ASME Sect. III or Other Applicable Requirements	Yes	Designed to other appropriate codes and standards.
10	QA Requirements	Yes	Ref. 15, and 118.
11	Internal Hazard Resistance	Not Applicable	The only potential hazards that could prevent this SSC from performing its function are already designated as Safety Class concerns.
12	Maintenance Requirements	Yes	The systems are designed to allow maintenance without affecting the safety function.
13	Test Requirements	Yes	The systems are designed to allow testing without affecting the safety function.

Table 4.3-3 Safety Class Evaluations (Continued)

PRFT Dip Leg Siphon Break (Section 4.3.9)			
Design Requirements		**Requirements Met**	**Basis / References**
1	DBE Resistance	Yes	PRFT – part of PRFT vessel (Section 4.3.7)
2	DBT Resistance	Not Applicable	This System is within a Category I Structure as defined in Section 5.1 and Ref. 4.
3	PMF Resistance	Not Applicable	Refer to Section 3.4.2.1.
4	PMP Resistance	Not Applicable	Refer to Section 3.4.2.1.
5	Explosion/Fire Resistance	Not Applicable	The potential hazards other than the hazards due to Non-Safety Related SSCs – Interaction Sources that could prevent this SSC from performing its function are already designated as Safety Class concerns. See Section 4.3.9 for evaluation of the potential hazards due to confined Hydrogen in Non-Safety Related SSCs – Interaction Sources.
6	Single Active Failure Resistance	Not Applicable	Passive design feature.
7	Equipment Environment Consideration	Yes	PRFT – part of PRFT vessel (Section 4.3.7)
8	Class 1E Requirements	Not Applicable	
9	ASME Sect. III or Other Applicable Requirements	Yes	Designed to other appropriate codes and standards.
10	QA Requirements	Yes	PRFT – part of PRFT vessel (Section 4.3.7)
11	Internal Hazard Resistance	Not Applicable	Although this SSC has not been qualified for the worst possible internal explosion, the Safety Class purge system will preclude the explosion from occurring.
12	Maintenance Requirements	Yes	The systems are designed to allow maintenance without affecting the safety function.
13	Test Requirements	Yes	The systems are designed to allow testing without affecting the safety function.

Table 4.3-3 Safety Class Evaluations (Continued)

Main Process Cell Crane Structure (Section 4.3.10)			
Design Requirements		**Requirements Met**	**Basis / References**
1	DBE Resistance	Yes	Ref. 26.
2	DBT Resistance	Not Applicable	This SSC is within a Category I Structure as defined in Reference 4.
3	PMF Resistance	Not Applicable	Refer to Section 3.4.2.1.
4	PMP Resistance	Not Applicable	Refer to Section 3.4.2.1.
5	Explosion/Fire Resistance	Not Applicable	The only potential hazards that could prevent this SSC from performing its function are already designated as Safety Class concerns.
6	Single Active Failure Resistance	Not Applicable	
7	Equipment Environment Consideration	Yes	The Structural Integrity Program assures that the design characteristics for normal operations are maintained.
8	Class 1E Requirements	Not Applicable	
9	ASME Sect. III or Other Applicable Requirements	Not Applicable	
10	QA Requirements	Yes	DOE Order 6430.1A requires that the design of safety class items be performed under a program that meets the requirements of NQA-1. The standard applied in qualifying this SSC is that the level of quality assurance should meet the intent of the requirements for items important to safety in a commercial nuclear power plant. The DWPF quality assurance program used for design is comparable to the requirements of NQA-1 (Ref. 22 and 23), which is also the standard used in the design of commercial nuclear power plants. Therefore, the design of this SSC is deemed to have been performed with an appropriate level of quality assurance.
11	Internal Hazard Resistance	Not Applicable	The only potential hazards that could prevent this SSC from performing its function are already designated as Safety Class concerns.
12	Maintenance Requirements	Yes	The structure was designed to allow inspections and maintenance.
13	Test Requirements	Not Applicable	

Table 4.3-3 Safety Class Evaluations (Continued)

Remote Process Cell Covers (Section 4.3.11)			
Design Requirements		**Requirements Met**	**Basis / References**
1	DBE Resistance	Yes	Ref. 27 and 137.
2	DBT Resistance	Not Applicable	This SSC is within a Category I Structure as defined in Reference 4.
3	PMF Resistance	Not Applicable	Refer to Section 3.4.2.1.
4	PMP Resistance	Not Applicable	Refer to Section 3.4.2.1.
5	Explosion/Fire Resistance	Not Applicable	The only potential hazards that could prevent this SSC from performing its function are already designated as Safety Class concerns.
6	Single Active Failure Resistance	Not Applicable	
7	Equipment Environment Consideration	Yes	The Structural Integrity Program assures that the design characteristics for normal operations are maintained.
8	Class 1E Requirements	Not Applicable	
9	ASME Sect. III or Other Applicable Requirements	Not Applicable	
10	QA Requirements	Yes	DOE Order 6430.1A requires that the design of safety class items be performed under a program that meets the requirements of NQA-1. The standard applied in qualifying this SSC is that the level of quality assurance should meet the intent of the requirements for items important to safety in a commercial nuclear power plant. The DWPF quality assurance program used for design is comparable to the requirements of NQA-1 (Ref. 22 and 23), which is also the standard used in the design of commercial nuclear power plants. Therefore, the design of this SSC is deemed to have been performed with an appropriate level of quality assurance.
11	Internal Hazard Resistance	Not Applicable	The only potential hazards that could prevent this SSC from performing its function are already designated as Safety Class concerns.
12	Maintenance Requirements	Not Applicable	
13	Test Requirements	Not Applicable	

Table 4.3-3 Safety Class Evaluations (Continued)

Crane Maintenance Shield Door Structural Support (Section 4.3.12)			
Design Requirements		**Requirements Met**	**Basis / References**
1	DBE Resistance	Yes	Ref. 59.
2	DBT Resistance	Not Applicable	This SSC is within a Category I Structure as defined in Reference 4.
3	PMF Resistance	Not Applicable	Refer to Section 3.4.2.1.
4	PMP Resistance	Not Applicable	Refer to Section 3.4.2.1.
5	Explosion/Fire Resistance	Not Applicable	The only potential hazards that could prevent this SSC from performing its function are already designated as Safety Class concerns.
6	Single Active Failure Resistance	Not Applicable	
7	Equipment Environment Consideration	Yes	The Structural Integrity Program assures that the design characteristics for normal operations are maintained.
8	Class 1E Requirements	Not Applicable	
9	ASME Sect. III or Other Applicable Requirements	Not Applicable	
10	QA Requirements	Yes	DOE Order 6430.1A requires that the design of safety class items be performed under a program that meets the requirements of NQA-1. The standard applied in qualifying this SSC is that the level of quality assurance should meet the intent of the requirements for items important to safety in a commercial nuclear power plant. The DWPF quality assurance program used for design is comparable to the requirements of NQA-1 (Ref. 22 and 23), which is also the standard used in the design of commercial nuclear power plants. Therefore, the design of this SSC is deemed to have been performed with an appropriate level of quality assurance.
11	Internal Hazard Resistance	Not Applicable	The only potential hazards that could prevent this SSC from performing its function are already designated as Safety Class concerns.
12	Maintenance Requirements	Yes	The structure was designed to allow inspections and maintenance.
13	Test Requirements	Not Applicable	

Table 4.3-3 Safety Class Evaluations (Continued)

CPC Removable Wall (Section 4.3.28)			
Design Requirements		**Requirements Met**	**Basis / References**
1	DBE Resistance	Yes	Ref. 83.
2	DBT Resistance	Not Applicable	This SSC is within a Category I Structure as defined in Section 5.1 and Ref. 4.
3	PMF Resistance	Not Applicable	Refer to Section 3.4.2.1.
4	PMP Resistance	Not Applicable	Refer to Section 3.4.2.1.
5	Explosion/Fire Resistance	Not Applicable	The only potential hazards that could prevent this SSC from performing its function are already designated as Safety Class concerns.
6	Single Active Failure Resistance	Not Applicable	
7	Equipment Environment Consideration	Yes	The Structural Integrity Program assures that the design characteristics for normal operations are maintained.
8	Class 1E Requirements	Not Applicable	
9	ASME Sect. III or Other Applicable Requirements	Not Applicable	
10	QA Requirements	Yes	DOE Order 6430.1A requires that the design of safety class items be performed under a program that meets the requirements of NQA-1. The standard applied in qualifying this SSC is that the level of quality assurance should meet the intent of the requirements for items important to safety in a commercial nuclear power plant. The DWPF quality assurance program used for design is comparable to the requirements of NQA-1 (Ref. 22 and 23), which is also the standard used in the design of commercial nuclear power plants. Therefore, the design of this SSC is deemed to have been performed with an appropriate level of quality assurance.
11	Internal Hazard Resistance	Not Applicable	The only potential hazards that could prevent this SSC from performing its function are already designated as Safety Class concerns.
12	Maintenance Requirements	Not Applicable	
13	Test Requirements	Not Applicable	

Table 4.3-3 Safety Class Evaluations (Continued)

CPC/SPC Jumpers Above the Safety Class Jumpers (Section 4.3.35)			
Design Requirements		**Requirements Met**	**Basis / References**
1	DBE Resistance	Yes	Ref. 38, 124, 269, 270.
2	DBT Resistance	Not Applicable	This SSC is within a Category I Structure as defined in Section 5.1 and Ref. 4.
3	PMF Resistance	Not Applicable	Refer to Section 3.4.2.1.
4	PMP Resistance	Not Applicable	Refer to Section 3.4.2.1.
5	Explosion/Fire Resistance	Not Applicable	The potential hazards other than the hazards due to Non-Safety Related SSCs – Interaction Sources that could prevent this SSC from performing its function are already designated as Safety Class concerns. See Section 4.3.35 for evaluation of the potential hazards due to Non-Safety Related SSCs – Interaction Sources.
6	Single Active Failure Resistance	Not Applicable	
7	Equipment Environment Consideration	Yes	The Structural Integrity Program assures that the design characteristics for normal operations are maintained.
8	Class 1E Requirements	Not Applicable	
9	ASME Sect. III or Other Applicable Requirements	Not Applicable	
10	QA Requirements	Yes	DOE Order 6430.1A requires that the design of safety class items be performed under a program that meets the requirements of NQA-1. The standard applied in qualifying this SSC is that the level of quality assurance should meet the intent of the requirements for items important to safety in a commercial nuclear power plant. The DWPF quality assurance program used for design is comparable to the requirements of NQA-1 (Ref. 22 and 23), which is also the standard used in the design of commercial nuclear power plants. Therefore, the design of this SSC is deemed to have been performed with an appropriate level of quality assurance.
11	Internal Hazard Resistance	Not Applicable	The only potential hazards that could prevent this SSC from performing its function are already designated as Safety Class concerns.
12	Maintenance Requirements	Yes	The system is designed to allow maintenance without affecting the safety function.
13	Test Requirements	Not Applicable	

Table 4.3-3 Safety Class Evaluations (Continued)

Melt Cell Crane Structure(Section 4.3.44)			
Design Requirements		**Requirements Met**	**Basis / References**
1	DBE Resistance	Yes	Ref. 110.
2	DBT Resistance	Not Applicable	This SSC is within a Category I Structure as defined in Reference 4.
3	PMF Resistance	Not Applicable	Refer to Section 3.4.2.1.
4	PMP Resistance	Not Applicable	Refer to Section 3.4.2.1.
5	Explosion/Fire Resistance	Not Applicable	The only potential hazards that could prevent this SSC from performing its function are already designated as Safety Class concerns.
6	Single Active Failure Resistance	Not Applicable	
7	Equipment Environment Consideration	Yes	The Structural Integrity Program assures that the design characteristics for normal operations are maintained.
8	Class 1E Requirements	Not Applicable	
9	ASME Sect. III or Other Applicable Requirements	Not Applicable	
10	QA Requirements	Yes	DOE Order 6430.1A requires that the design of safety class items be performed under a program that meets the requirements of NQA-1. The standard applied in qualifying this SSC is that the level of quality assurance should meet the intent of the requirements for items important to safety in a commercial nuclear power plant. The DWPF quality assurance program used for design is comparable to the requirements of NQA-1 (Ref. 22 and 23), which is also the standard used in the design of commercial nuclear power plants. Therefore, the design of this SSC is deemed to have been performed with an appropriate level of quality assurance.
11	Internal Hazard Resistance	Not Applicable	The only potential hazards that could prevent this SSC from performing its function are already designated as Safety Class concerns.
12	Maintenance Requirements	Yes	Structure was designed to allow inspections and maintenance.
13	Test Requirements	Not Applicable	

Table 4.3-3 Safety Class Evaluations (Continued)

SEFT/PRFT Temperature Instrumentation and Associated Interlocks (Section 4.3.45) (Ref. 229)			
Design Requirements		**Requirements Met**	**Basis / References**
1	DBE Resistance	Yes	The interlock system(s) components have been upgraded or replaced as necessary to be seismically qualified (Ref. 233)
2	DBT Resistance	Not Applicable	This SSC is within a Category I Structure as defined in Section 5.1 and Ref. 4.
3	PMF Resistance	Not Applicable	Refer to Section 3.4.2.1.
4	PMP Resistance	Not Applicable	Refer to Section 3.4.2.1.
5	Explosion/Fire Resistance	Not Applicable	The potential hazards other than the hazards due to Non-Safety Related SSCs – Interaction Sources that could prevent this SSC from performing its function are already designated as Safety Class concerns. See Section 4.3.45 for evaluation of the potential hazards due to Non-Safety Related SSCs – Interaction Sources.
6	Single Active Failure Resistance	No	Redundancy is provided for RTDs, and temperature instrumentation loops. However, there is only a single penetration, thermowell, and wall termination block. Any failure of the thermowell will result in loss of the safety function.
7	Equipment Environment Consideration	Yes	The equipment associated with the interlock system is in the mild environment.
8	Class 1E Requirements	No	Acceptable because of 1) the low probability that a smart short that would preclude this fail safe interlock from functioning; 2) a TSR requirement will be implemented that will periodically verify the operability of the interlocks, and 3) the fail-safe nature of the current interlocks, they represent acceptable risks and are judged to be acceptable.
9	ASME Sect. III or Other Applicable Requirements	Not Applicable	
10	QA Requirements	No	Any new/replacement equipment will be procured, installed and tested to SC QA requirements. The controls for receipt of SE stream control loop(s) will be periodically tested as part of the Technical Safety Requirements (TSR) during surveillance testing of the temperature and steam flow instrumentation loops to ensure operability of the safety functions. In addition, all future modifications to the system will be performed in accordance with the 1Q Manual for SC SSCs. Based on periodic TSR testing requirements and periodic monitoring, this equipment is judged to be acceptable (Ref. 229).
11	Internal Hazard Resistance	Not Applicable	The interlock system component(s) are not credited to withstand internal hazards events.

Table 4.3-3 Safety Class Evaluations (Continued)

SEFT/PRFT Temperature Instrumentation and Associated Interlocks (Section 4.3.45) (Ref. 229) (Continued)		
Design Requirements	**Requirements Met**	**Basis / References**
12 Maintenance Requirements	Yes	The interlock system component(s) Are designed so that it can be maintained.
13 Test Requirements	Yes	The instrument loops can be separated without affecting system performance and can be calibrated in place.

Table 4.3-3 Safety Class Evaluations (Continued)

SRAT Temperature and Steam Flow Instrumentation and Associated Interlocks (Section 4.3.46) (Ref. 229)			
Design Requirements		**Requirements Met**	**Basis / References**
1	DBE Resistance	Yes	The interlock system(s) components have been upgraded or replaced as necessary to be seismically qualified (Ref. 233)
2	DBT Resistance	Not Applicable	This SSC is within a Category I Structure as defined in Section 5.1 and Ref. 4.
3	PMF Resistance	Not Applicable	Refer to Section 3.4.2.1.
4	PMP Resistance	Not Applicable	Refer to Section 3.4.2.1.
5	Explosion/Fire Resistance	Not Applicable	The potential hazards other than the hazards due to Non-Safety Related SSCs – Interaction Sources that could prevent this SSC from performing its function are already designated as Safety Class concerns. See Section 4.3.46 for evaluation of the potential hazards due to Non-Safety Related SSCs – Interaction Sources.
6	Single Active Failure Resistance	No	Redundancy is provided for RTDs, steam flow elements, check valves and temperature instrumentation loops. However, there are only single penetrations (one for electrical and one for steam). Also, there is only a single thermowell, and a single wall termination block. Any failure of the thermowell or penetrations will result in loss of the safety function.
7	Equipment Environment Consideration	Yes	The equipment associated with the interlock system is in the mild environment.
8	Class 1E Requirements	No	Acceptable because of 1) the low probability that a smart short that would preclude this fail safe interlock from functioning; 2) a TSR requirement will be implemented that will periodically verify the operability of the interlocks, and 3) the fail-safe nature of the current interlocks, they represent acceptable risks and are judged to be acceptable.
9	ASME Sect. III or Other Applicable Requirements	Yes	The process steam supply piping from the flow control valve to the heating coils including pressure boundaries off the main steam line were designed to meet SRS codes that are equivalent to ASME B31.3 by cross-reference within WSRC-IM-95-58 (Ref. 6.4) for their respective applications.

Table 4.3-3 Safety Class Evaluations (Continued)

SRAT Temperature and Steam Flow Instrumentation and Associated Interlocks (Section 4.3.46) (Ref. 229) (Continued)		
Design Requirements	**Requirements Met**	**Basis / References**
10 QA Requirements	No	Any new/replacement equipment will be procured, installed and tested to SC QA requirements. The controls for receipt of SE stream control loop(s) will be periodically tested as part of the Technical Safety Requirements (TSR) during surveillance testing of the temperature and steam flow instrumentation loops to ensure operability of the safety functions. In addition, all future modifications to the system will be performed in accordance with the 1Q Manual for SC SSCs. Based on periodic TSR testing requirements and periodic monitoring, this equipment is judged to be acceptable (Ref. 229).
11 Internal Hazard Resistance	Not Applicable	The interlock system component(s) are not credited to withstand internal hazards events.
12 Maintenance Requirements	Yes	The interlock system component(s) are designed so that it can be maintained.
13 Test Requirements	Yes	The instrument loops can be separated without affecting system performance and can be calibrated in place.

Table 4.3-3 Safety Class Evaluations (Continued)

SEFT/PRFT Agitator Power Monitors and Associated Interlocks (Section 4.3.47) (Ref. 233)		
Design Requirements	**Requirements Met**	**Basis / References**
1 DBE Resistance	Yes	The interlock system(s) components have been designed and installed to be seismically qualified (Ref. 233)
2 DBT Resistance	Not Applicable	This SSC is within a Category I Structure as defined in Section 5.1 and Ref. 4.
3 PMF Resistance	Not Applicable	Refer to Section 3.4.2.1.
4 PMP Resistance	Not Applicable	Refer to Section 3.4.2.1.
5 Explosion/Fire Resistance	Not Applicable	The potential hazards other than the hazards due to Non-Safety Related SSCs – Interaction Sources that could prevent this SSC from performing its function are already designated as Safety Class concerns. See Section 4.3.47 for evaluation of the potential hazards due to Non-Safety Related SSCs – Interaction Sources.
6 Single Active Failure Resistance	Yes	Redundancy is provided for sensing and tripping circuits.
7 Equipment Environment Consideration	Yes	The equipment associated with the interlock system is in the mild environment.
8 Class 1E Requirements	Yes	The SC sensing and tripping circuitry does meet the requirements. The power supplied is PS since loss of power would shut down all equipment putting the systems in a safe condition.
9 ASME Sect. III or Other Applicable Requirements	Not Applicable	
10 QA Requirements	Yes	See Ref. 233
11 Internal Hazard Resistance	Not Applicable	The interlock system component(s) are not credited to withstand internal hazards events.
12 Maintenance Requirements	Yes	The interlock system component(s) are designed so that it can be maintained.
13 Test Requirements	Yes	The instrument loops can be separated without affecting system performance and can be calibrated in place.

Table 4.4-1 Safety Significant Structures, Systems, and Components

Safety Significant SSC	Safety Significant Function	Safety Significant Functional Requirement
CPC Primary Purge System	Prevent explosions in the PRFT, SEFT, SRAT, SME, SMECT, MFT, RCT, and DWTT (See Section 4.3.7) and the connected vent piping.	To provide a purge to the CPC/SPC vessels sufficient to maintain the flammable concentration of the CPC/SPC vessel's vapor space less than the LFL/CLFL.
Air Compressors/ Air Receiver Tank/ Liquid Nitrogen Storage Tank/ Ambient Vaporizers		To supply sufficient flow to the purge system to maintain the CPC/SPC vessels non-flammable.
Various Pressure and Flow Control Valves, Air Dryers, Purge Hanford Connectors and Jumpers, and Piping and Valves		To provide a pathway for the purge to the CPC/SPC vessels.
221-S Shielded Viewing Windows	Provides sufficient shielding to protect the worker.	To provide sufficient shielding to protect the worker.
Melter	Maintains its integrity to contain its contents.	To provide a barrier to prevent the release of the melter contents.
LPPP Vessels (SPT, PPT, and RPT)	Maintain their integrity to contain their contents and support the purging of their contents.	To provide the initial barrier to prevent the release of the contents into the cell and contain the contents to allow the purge systems to function.
LPPP Primary Purge System	Prevent explosions in the SPT, PPT, and RPT (See Section 4.4.9), and the connected vent piping.	To provide a purge to maintain the hydrogen concentration below the LFL for hydrogen in the SPT and PPT and below CLFL in the RPT.
Liquid Nitrogen Storage Tank		To supply sufficient purge flow to the purge system to maintain the vessel's vapor space non-combustible.
Ambient Vaporizers		To supply sufficient purge flow to the purge system to maintain the vessel's vapor space non-combustible.
Piping and Valves		To provide a pathway for the purge to the LPPP vessels.

Table 4.4-1 Safety Significant Structures, Systems, and Components (Continued)

Safety Significant SSC	Safety Significant Function	Safety Significant Functional Requirement
Emergency Nitrogen Connection		Provide capability for nitrogen to be supplied from an vendor truck if necessary.
LPPP Cell and Cell Covers	Provide a barrier to prevent a significant release of materials from within the cells as well as providing shielding from the process.	To provide a barrier to prevent a significant release of materials from within the cells as well as providing shielding from the process.
	Prevent II/I interaction with Safety Significant systems within the LPPP.	To maintain their integrity to support the operation of the Safety Significant systems within the LPPP.
LPPP Process Cell Crane Structural Support/Superstructure	Support the operation of the safety significant systems within the LPPP by preventing its collapse from causing their failure.	To support the operation of the safety significant systems within the LPPP by preventing its collapse from causing their failure.
Glass Waste Storage Building (GWSB) Vaults (GWSB #1 and GWSB #2)	Provide shielding for the protection of workers.	To provide sufficient shielding to protect the worker. The GWSB Vault provides shielding to protect workers by remaining structurally intact.
	Protect the integrity of the filled canisters.	To maintain its integrity by preventing its collapse from causing failure of the filled canisters.
GWSB Canister Supports (GWSB #1 and GWSB #2)	Protect the integrity of the filled canisters.	To protect the integrity of the filled canisters. The GWSB canister supports prevent the canisters from falling to the vault floor.
LPPP Jumpers Above Safety Significant Jumpers	Support the operation of the Safety Significant systems beneath it by preventing its collapse from causing their failure.	To support the operation of the Safety Significant systems beneath it by preventing its collapse from causing their failure.
LPPP Crane Operator Station	Provides sufficient shielding to protect the worker	To provide sufficient shielding to protect the worker
Formic Acid Feed Tank and Piping	Provides a barrier to prevent the release of formicacid.	To provide a barrier to prevent the release of formicacid.
Formic Acid Feed Tank Dikes	Provide containment of any spilled inventory.	To provide containment of any spilled inventory.
Organic Acid Drain Catch Tank and Piping	Maintains their integrity to contain their contents.	Maintains their integrity to contain their contents.
Organic Acid Drain Catch Tank Dikes	Maintains its integrity to contain any leaked formic acid.	Maintains its integrity to contain any leaked formicacid.
Nitric Acid Feed Tank and Piping	Maintains their integrity to contain their contents.	Maintains their integrity to contain their contents.
Nitric Acid Feed Tank Dikes	Maintains its integrity to contain any leaked nitric acid.	Maintains its integrity to contain any leaked nitric acid.

Table 4.4-1 Safety Significant Structures, Systems, and Components (Continued)

Safety Significant SSC	Safety Significant Function	Safety Significant Functional Requirement
Failed Equipment Storage Vaults (FESV)	Provides a barrier of protection from the sources stored within it.	Provides a barrier of protection from the sources stored within it.
Acid Drain Catch Tank and Piping	Maintain their integrity to contain their contents.	Maintain their integrity to contain their contents.
Acid Drain Catch Tank Dikes	Maintains its integrity to contain any leaked nitric acid.	Maintains its integrity to contain any leaked nitric acid.
Interarea Transfer Lines	Maintain their integrity to contain their contents and prevent release following an explosion in or external to the transfer line.	Maintain their integrity to contain their contents and prevent release following an explosion in or external to the transfer line.
Secondary Containment for Interarea Transfer Lines	Maintain their integrity to contain their contents and prevent release following a hydrogen explosion in the Secondary Containment for the transfer lines (i.e., MST/Sludge Solids, Sludge, MST/Salt Solution, DSS, 512-S Filtrate).	Maintain their integrity to contain their contents and prevent release following a hydrogen explosion in the Secondary Containment for the transfer lines (i.e., MST/Sludge Solids, Sludge, MST/Salt Solution, DSS, 512-S Filtrate).
LPPP Transfer Line Jumpers and Hanford connectors (with the exception of the SE jumpers and sludge jumper from Tank 40)	Maintain their integrity to contain their contents and prevent release following a DBE or an explosion in the jumper.	Maintain their integrity to contain their contents and prevent release following a DBE or an explosion in the jumper.
LPPP Sludge Transfer Line Jumper between Tank 40 and SPT and Hanford Connectors	Maintain their integrity to contain their contents, including following a DBE and provide a minimal leak path following a detonation in the jumper.	Maintain their integrity to contain their contents, including following a DBE and provide a minimal leak path following a detonation in the jumper.
LPPP SE Transfer Line Jumpers	Maintain their integrity to contain their contents following a DBE	Maintain their integrity to contain their contents following a DBE
Transfer Line Jumper connecting LWPT to PCP4	Prevent release following an explosion in jumper.	Prevent release following an explosion in jumper
422-S Superstructure	Supports the operation of the safety significant SSCs within the 422-S Area for II/I issues.	To support the operation of the safety significant SSCs within the 422-S Area for II/I issues.

Table 4.4-1 Safety Significant Structures, Systems, and Components (Continued)

Safety Significant SSC	Safety Significant Function	Safety Significant Functional Requirement
SRAT/SME Gas Chromatographs and Associated Interlocks	Prevent explosions in the SRAT and SME (See Section 4.4.41) and the connected vent piping.	To provide an indication of the SRAT and SME vapor space flammable concentration during operations . Interlock Functions : Isolate steam feed, nitric acid, and formic acid additions to the SRAT and SME Stop the PFSFT (SME) transfer pump
SRAT and SME Steam control valves and formic/nitric control valves		To close when interlock condition occurs: Interlock conditions: High LFL from GCs Low flow signal from purge flow switch
CPC Purge Flow Meters and Associated Interlocks	Prevent explosions in the SRAT and SME (See Section 4.4.42) and the connected vent piping.	To provide an indication of the purge flow to the vessels. Interlock Functions: Close steam control valves and stop formic and nitric acid additions for the SRAT and SME Stop PFSFT (SME) Transfer Pump
Zone 1 Ventilation	Mitigates effects of internal radiological process events with a minimum DF of 200.	Maintain negative pressure in the Vitrification Building which causes transport of airborne radionuclides from the process area through the Sand Filter.
Zone 1 Exhaust Fans	Supports the operation of the Zone 1 Ventilation System.	To provide sufficient flow to maintain the flow through the sandfilter.
Zone 1 Exhaust Fans Inlet Vane Dampers	Supports the operation of the Zone 1 Ventilation System.	To fully open on loss of instrument air or control signal.
Zone 1 Exhaust Fans Discharge Dampers	Supports the operation of the Zone 1 Ventilation System.	To open when the Zone 1 exhaust fan starts and to close when the fan is not operating.
Zone 1 Exhaust Balancing Dampers	Supports the operation of the Zone 1 Ventilation System.	To remain open following a DBE or DBT.
Zone 1 Exhaust Fans Suction Damper	Supports the operation of the Zone 1 Ventilation System.	To remain open following a DBE or DBT.
Zone 1 Exhaust Fan Manual Start Switches	Supports the operation of the Zone 1 Ventilation System.	To provide a means to manually start Zone 1 Exhaust Fans.

Table 4.4-1 Safety Significant Structures, Systems, and Components (Continued)

Safety Significant SSC	Safety Significant Function	Safety Significant Functional Requirement
Zone 1 Supply Fan (includes Weld Test Cell) Interlock	Supports the operation of the Zone 1 Ventilation System.	To interlock off the Zone 1 supply fans on high sand filter inlet plenum pressure.
Weld Test Cell Exhaust Fan Interlock	Supports the operation of the Zone 1 Ventilation System.	To interlock off the Weld Test Cell exhaust fans on high sand filter inlet plenum pressure.
Zone 2 Exhaust Fan Interlock	Supports the operation of the Zone 1 Ventilation System.	To interlock off the Zone 2 exhaust fans on high sand filter inlet plenum pressure.
Sand Filter Inlet Plenum Pressure Transmitters	Supports the operation of the Zone 1 Ventilation System.	To provide measurement of the sand filter inlet plenum pressure. The transmitter signal is used to initiate interlock actions on high pressure. Equipment to shut down if the pressure in the Sand Filter inlet plenum rises above a set maximum include: Zone 1 supply fans Zone 2 exhaust fans WTC exhaust fans
LCS 272	Supports the operation of the Zone 1 Ventilation System.	To control Zone 1 exhaust fans.
Sand Filter	Supports the operation of the Zone 1 Ventilation System.	To support the operations of the Zone 1 Ventilation System.
Zone 1 Tunnel	Supports the operation of the Zone 1 Ventilation System by providing an air flow path through the canyon to the Sand Filter and from the Sand Filter to the Fan House.	To support the operations of the Zone 1 Ventilation System by providing an air flow path through the canyon to the Sand Filter and from the Sand Filter to the Fan House.
Zone 1 Exhaust Stack and Zone 1 Exhaust Duct	Supports the operation of the Zone 1 Ventilation System by providing an air flow path for Zone 1 exhaust.	To support the operations of the Zone 1 Ventilation System by providing an air flow path for Zone 1 exhaust.
Diesel Generator System	Supports the operation of the Zone 1 Exhaust Fans during a loss of normal power and supplies power to the diesel support systems.	During a loss of normal power, start and support the required SS loads, including Y95 and L130 Panels, D42 and D52 Battery Chargers, LCS 272, DG Radiator Fans, DG Fuel Oil Transfer Pumps, LCS 210, and Zone 1 Exhaust Fans.
Jacket Water System	Supports the operability of the DG System following a loss of offsite power.	To provide cooling for engine while running and heat the lube oil in standby.

Table 4.4-1 Safety Significant Structures, Systems, and Components (Continued)

Safety Significant SSC	Safety Significant Function	Safety Significant Functional Requirement
Lube Oil System (including Lube Oil Makeup Tank and piping/valves to each diesel generator)	Supports the operability of the DG System following a loss of offsite power.	To provide lubrication for the engine while running and in Standby and to provide an adequate inventory of lube oil.
Engine Control System (Relays and governor)	Supports the operability of the DG System following a loss of offsite power.	To provide control functions for engine.
Generator control system (Relays and voltage regulators)	Supports the operability of the DG System following a loss of offsite power.	To provide control functions for generator.
Protective Relays	Supports the operability of the DG System following a loss of offsite power.	To provide protective and permissive functions for generator power distribution
Piping and Valve	Supports the operability of the DG System following a loss of offsite power.	To provide pathway for medium (jacket water, lube oil, air)
Breakers	Supports the operability of the DG System following a loss of offsite power.	To provide electrical connection for loads and isolation of essential distribution
Air start system for each generator	Supports the operability of the DG System following a loss of offsite power.	To supply adequate air for two automatic start cycles and allow an additional manual start attempt.
2-hr fire resistant cable enclosure	Supports the operability of the DG System following a loss of offsite power.	To provide 2-hr fire protection for the DG200 support systems cable tray.
DC Distribution System	Supports the operability of the DG System following a loss of offsite power.	To provide control power to D/G and distribution bus and breakers
Diesel Fuel Oil System	Supports the operability of the DG System following a loss of offsite power.	Maintain sufficient inventory to operate the DG System for a minimum of 4 days.
Fuel Oil Storage Tanks		To provide sufficient fuel oil for the diesels to operate for 4 days.
Fuel Oil Day Tanks		To maintain inventory to start D/Gs.
Fuel Oil Transfer Pumps		To provide the D/G with fuel oil from the storage tank.
Piping and Valves		To provide pathway for the fuel oil to be fed to the D/G.
LCS 210		To control the automatic pumping of the diesel fuel oil.
Fuel oil header redundant heat activated isolation valves		To prevent an active single failure from inadvertent activation of the heat activated isolation valve from isolating the day tanks from the fuel storage tanks.

Table 4.4-1 Safety Significant Structures, Systems, and Components (Continued)

Safety Significant SSC	Safety Significant Function	Safety Significant Functional Requirement
Manual start switch for each fuel oil pump		To provide a means to manually start the fuel oil pump.
Fan House Structure	Supports operation of the Zone 1 Ventilation System by preventing its collapse from causing failure of the Zone 1 Ventilation System, DG System, and Diesel Fuel Oil System.	Maintain structural integrity to support operation of the Zone 1 Ventilation System by preventing its collapse from causing failure of the Zone 1 Ventilation System, DG System, and Diesel Fuel Oil System.
Fan House Maintenance Cranes and Structural Support	Supports operation of the Zone 1 Ventilation System, DG System, and Diesel Fuel Oil System by preventing crane collapse from causing their failure.	Maintain structural integrity so that any potential failure would not impact the Zone 1 Ventilation System, DG System, and Diesel Fuel Oil System
Fire Protection Piping Above the Diesel Generator System	Supports the operation of the DG Systems by preventing its collapse from causing their failure.	Maintain structural integrity so that any potential failure would not impact the DG Systems.
Diesel Generator Room Heater Supports	Supports the operation of the DG Systems by preventing its collapse from causing their failure.	Maintain structural integrity so that any potential failure would not impact the DG Systems.
LPPP Safety Grade Purge System	Prevent explosions in the SPT, PPT, and RPT and the connected vent piping (see section 4.4.45).	Prevent explosions in the SPT, PPT, and RPT and the connected vent piping. This system maintains the hydrogen flammability and the hydrogen concentration below the LFL for hydrogen in the SPT and PPT and below the CLFL in the RPT. These systems maintain sufficient inventory to perform this function for a minimum of 4 days.
Liquid Nitrogen Storage Tank		To supply sufficient purge flow to the purge system to maintain the vessels' vapor space non-combustible for 4 days.
Ambient Vaporizer		To supply sufficient nitrogen flow to the purge system to maintain the LPPP vessels' non-flammable.
Piping and valves		To provide a pathway for the purge to the LPPP vessels.
Nitrogen Tank Level Instrumentation		To provide indication of the nitrogen tank inventory.
Pressure Indicators		To provide an indication of the vessel pressure relative to the cell.
Flow meters (local)		To provide a indication of the purge flow to the vessels.

Table 4.4-1 Safety Significant Structures, Systems, and Components (Continued)

Safety Significant SSC	Safety Significant Function	Safety Significant Functional Requirement
SPT/PPT/RPT Purge Hanford Connectors and Jumpers		To provide a pathway for the purge to the LPPP vessels.
Chemical Feed Lines to PPT and SPT		To provide the option to connect nitrogen bottles to purge the PPT and SPT.
Sodium Nitrite Feed Tank Dike and Dike Drain Plug	To maintain their integrity to prevent inadvertent drainage of sodium nitrite via the regulated drain header.	To prevent inadvertent mixing of incompatible chemicals.

Table 4.4-2 Safety Significant Vessels

Safety Significant Tank	Location	Equipment #	Material of Construction	Dimensions / Shape	Construction Type
Melter	Melt Cell (221-S)	S350-185-010-00-M	SA 240-304L Stainless Steel	8'-1 1/2" inner dia.	ASME Sect. VIII, Div 1&2 No Code Stamp
Formic Acid Feed Tank	3rd floor Vitrification Bldg.	S329-010-060-00-T	316L Stainless Steel	5' tall, 4'-6" dia	ASME Sect. VIII
Nitric Acid Feed Tank	3rd floor Vitrification Bldg.	S329-010-130-00-T	304L Stainless Steel	5' tall, 4'-6" dia	ASME Sect. VIII
SPT	LPPP	S511-010-020	SA240 type 304L Stainless Steel	10'2" tall, 12' dia. Shallow dished top. Flat bottom	ASME Sect. VIII, Div. 1, No Code Stamp
PPT	LPPP	S511-030-020	SA240 type 304L Stainless Steel	10'2" tall, 12' dia. Shallow dished top. Flat bottom	ASME Sect. VIII, Div. 1, No Code Stamp
RPT	LPPP	S511-020-010-00-T	SA240 type 304L Stainless Steel	10'2" tall, 12' dia. Shallow dished top. Flat bottom	ASME Sect. VIII, Div. 1, No Code Stamp
Organic Acid Drain Catch Tank	Tunnel Level Vitrification Bldg.	S329-100-030-00-T	316L Stainless Steel	8' tall, 5' dia	API 650 Appendix J
Acid Drain Catch Tank	Tunnel Level Vitrification Bldg.	S329-100-020-00-T	304L Stainless Steel	8' tall, 5' dia	API 650 Appendix J
Liquid N2 Storage Tank	422-S	S422-010-231-00-T	Nickel Steel (Inner) Carbon Steel (Outer)	369" x 114" dia	ASME Section VIII, Code Stamp
Liquid N2 Storage Tank	LPPP	S511-200-070-00-T	Nickel Steel (Inner) Carbon Steel (Outer)	369" x 114"	ASME Section VIII Code Stamp

Figures 4.3-1 through 4.3-3 Deleted

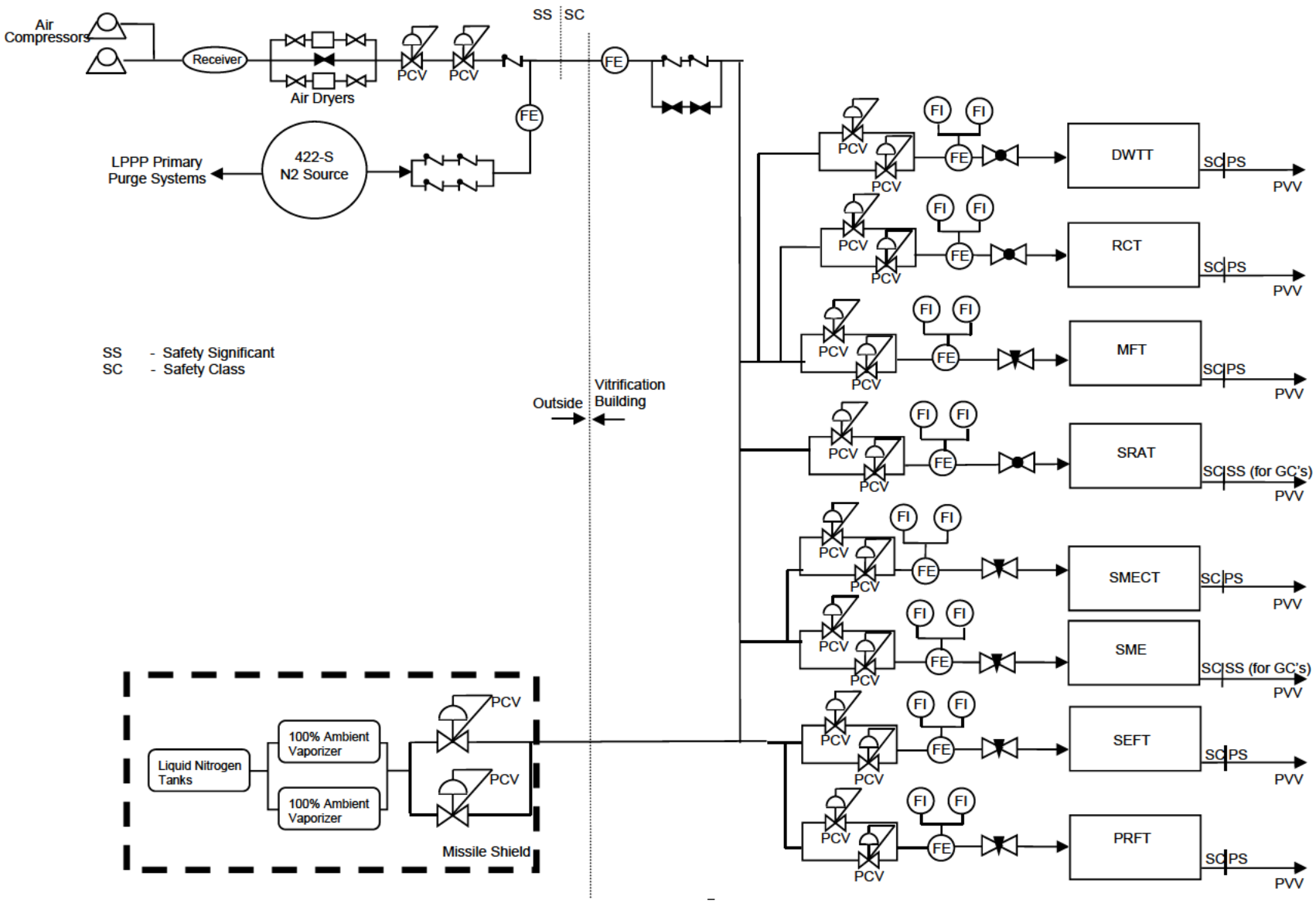

Figure 4.3-4 CPC Purge Systems

Figure 4.3-5 through 4.3-6 Deleted

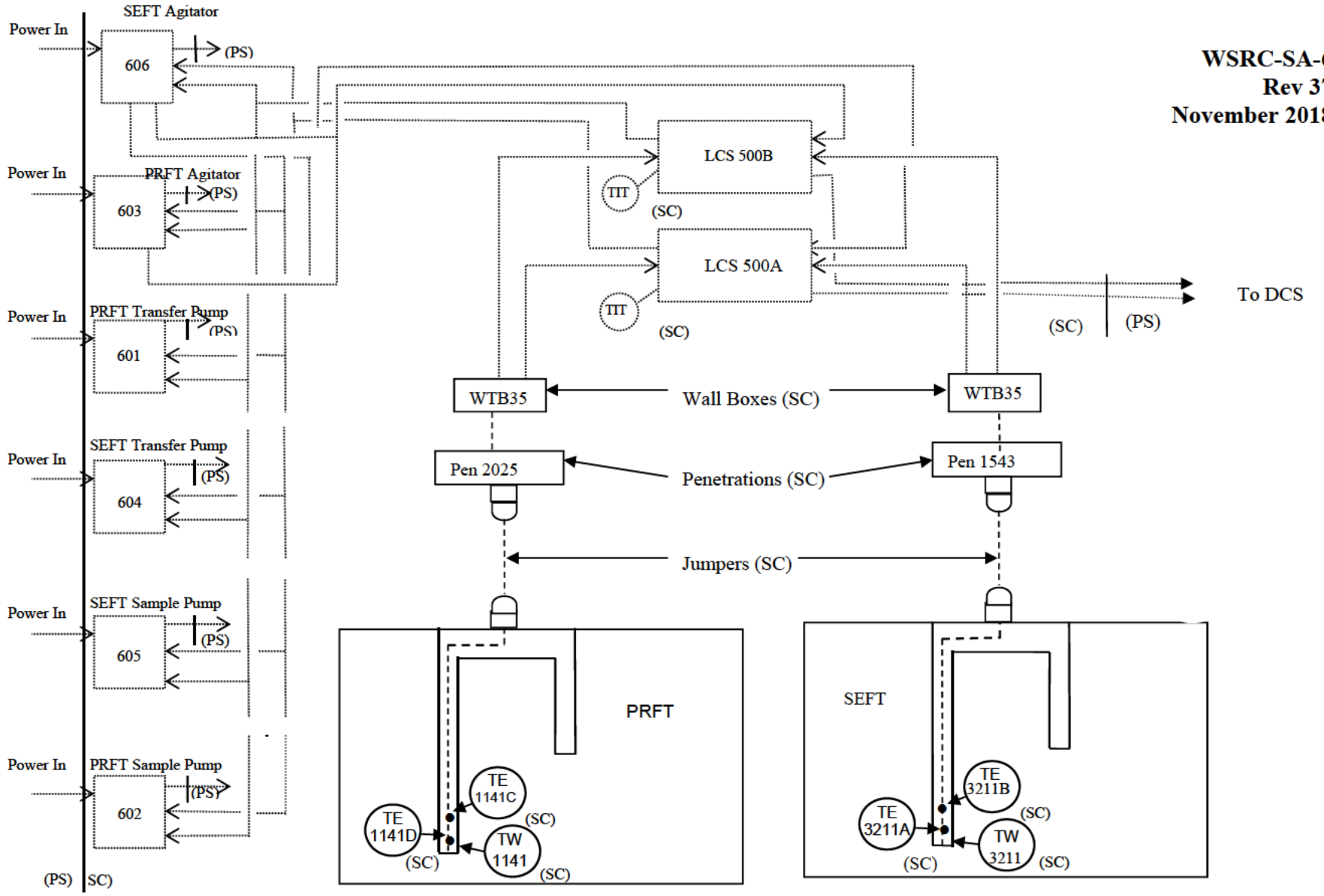

Figure 4.3-7 SEFT/PRFT Temperature Instrumentation and Associated Interlocks

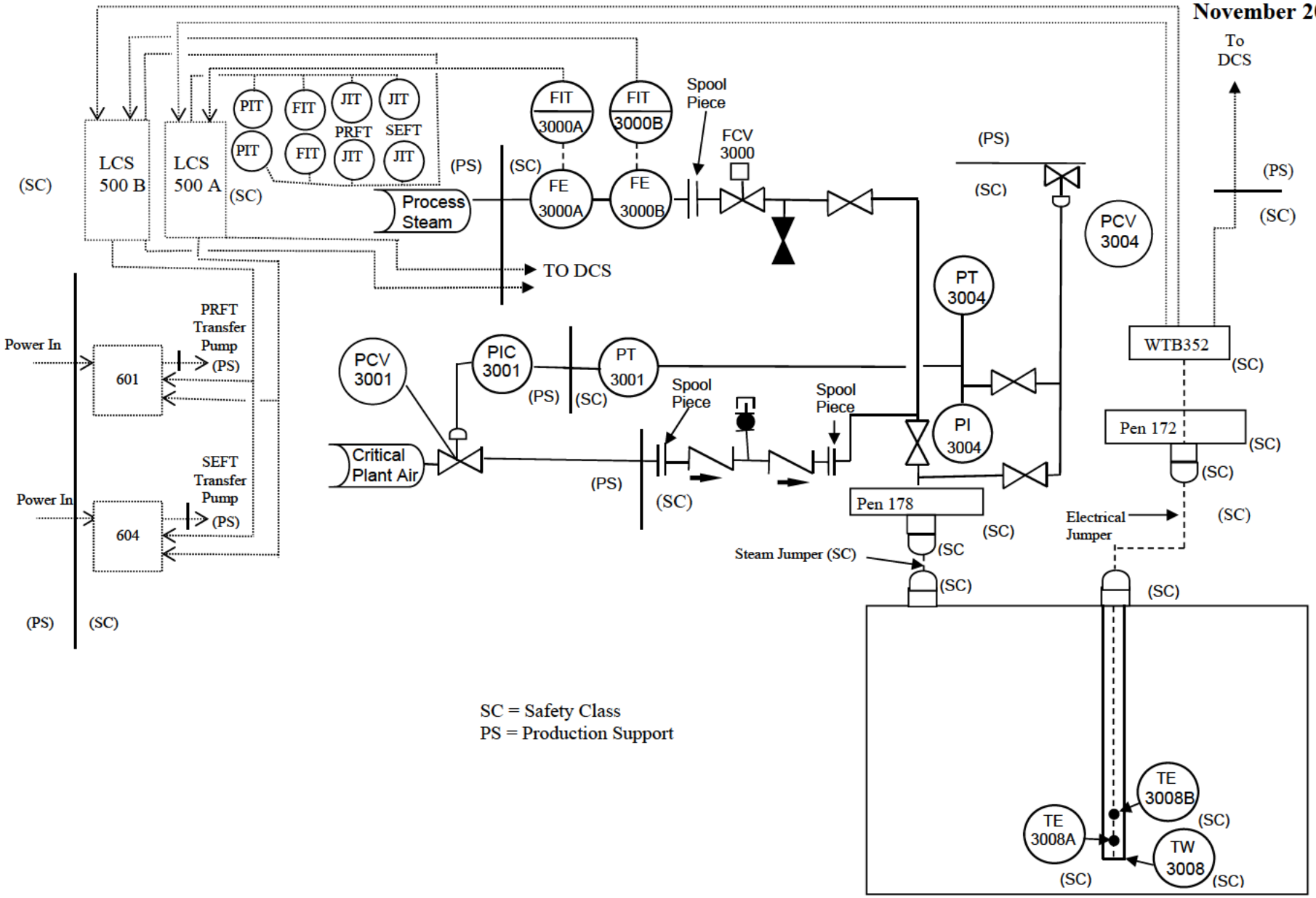

Figure 4.3-8 SRAT Temperature and Steam Flow Instrumentation and Associated Interlocks

Figure 4.4-1 through 4.4-5 Deleted

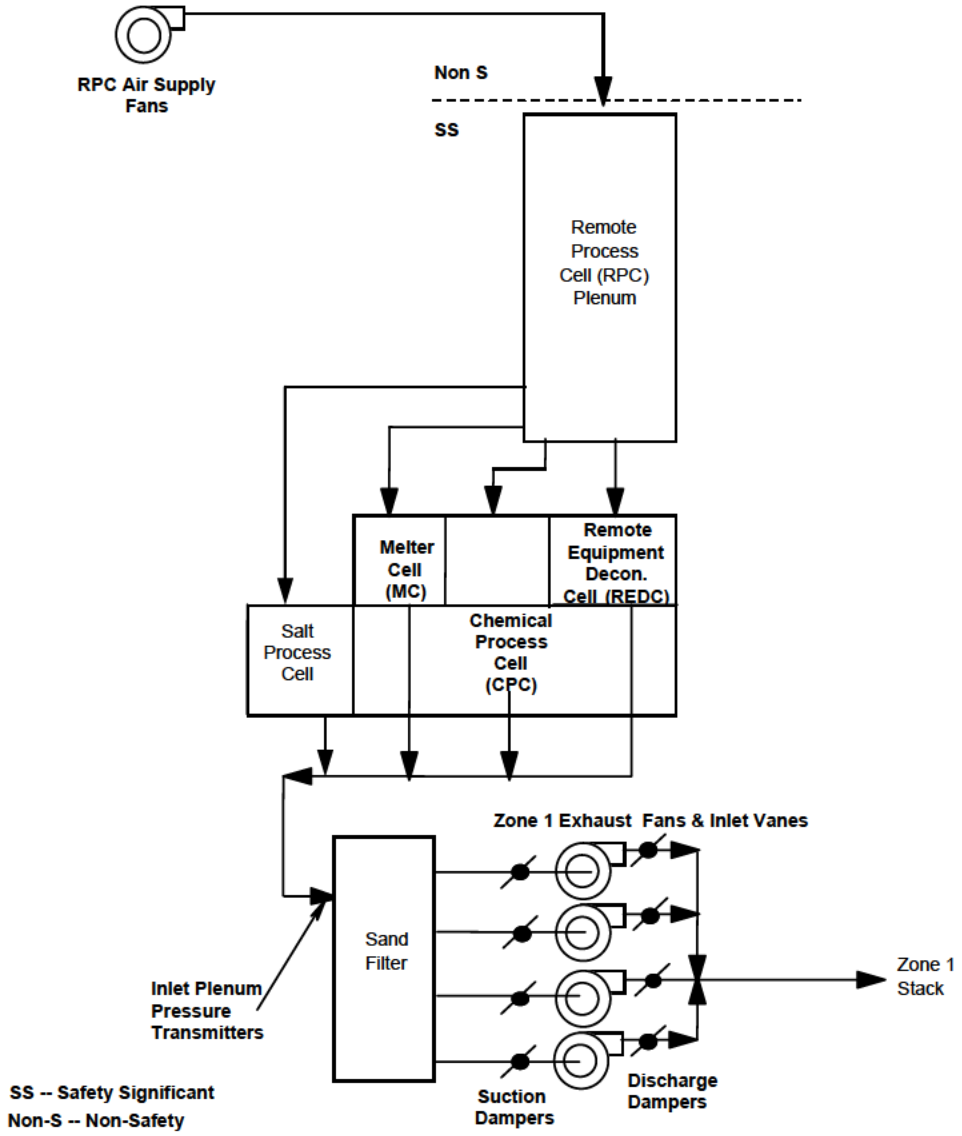

Figure 4.4-6 Safety Significant Zone 1 Ventilation System

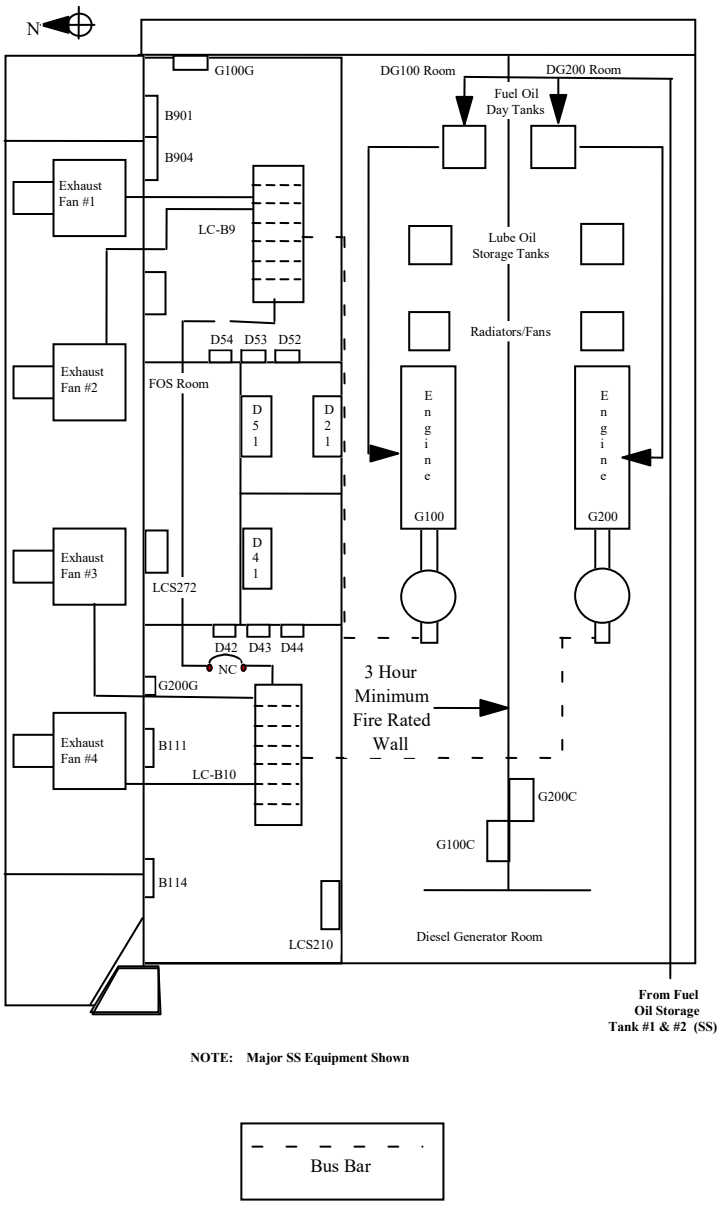

NOTE: Major SS Equipment Shown

Bus Bar

Figure 4.4-7 Fan House Layout

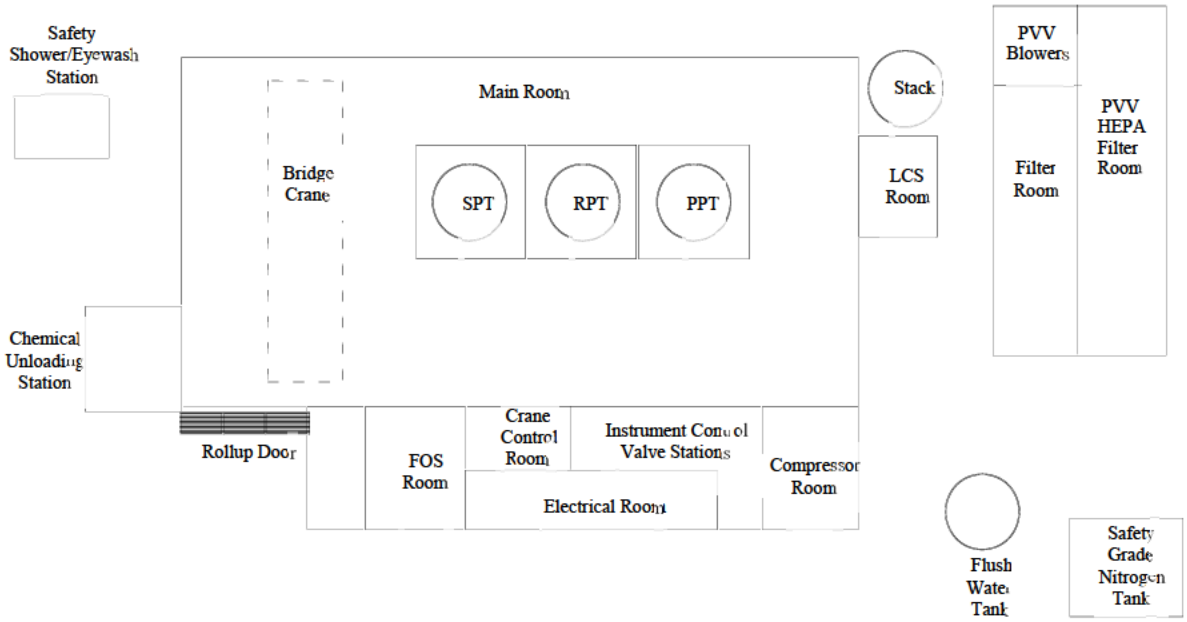

Figure 4.4-8 Low Point Pump Pit Building Layout

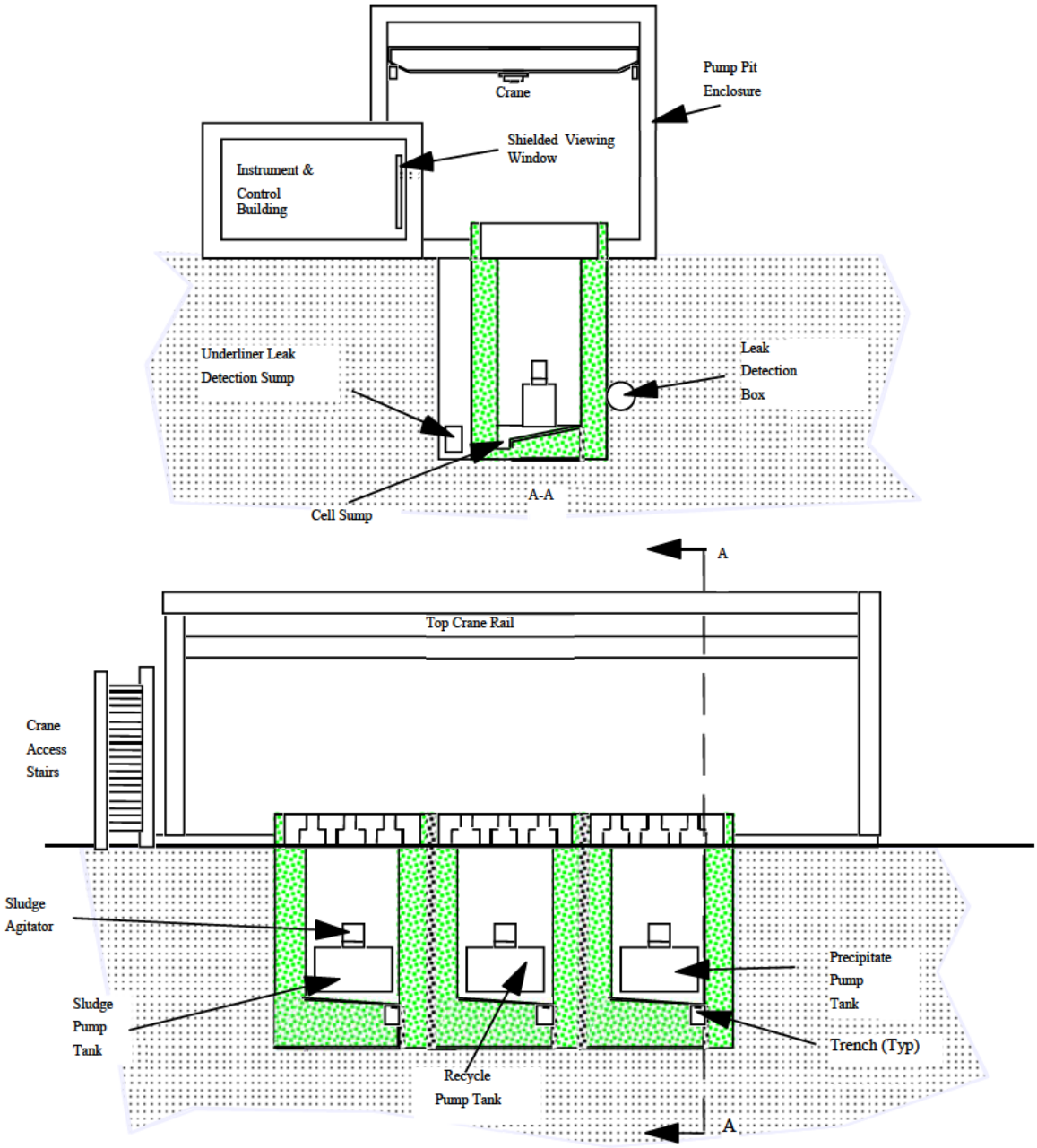

Figure 4.4-9 LPPP Sections

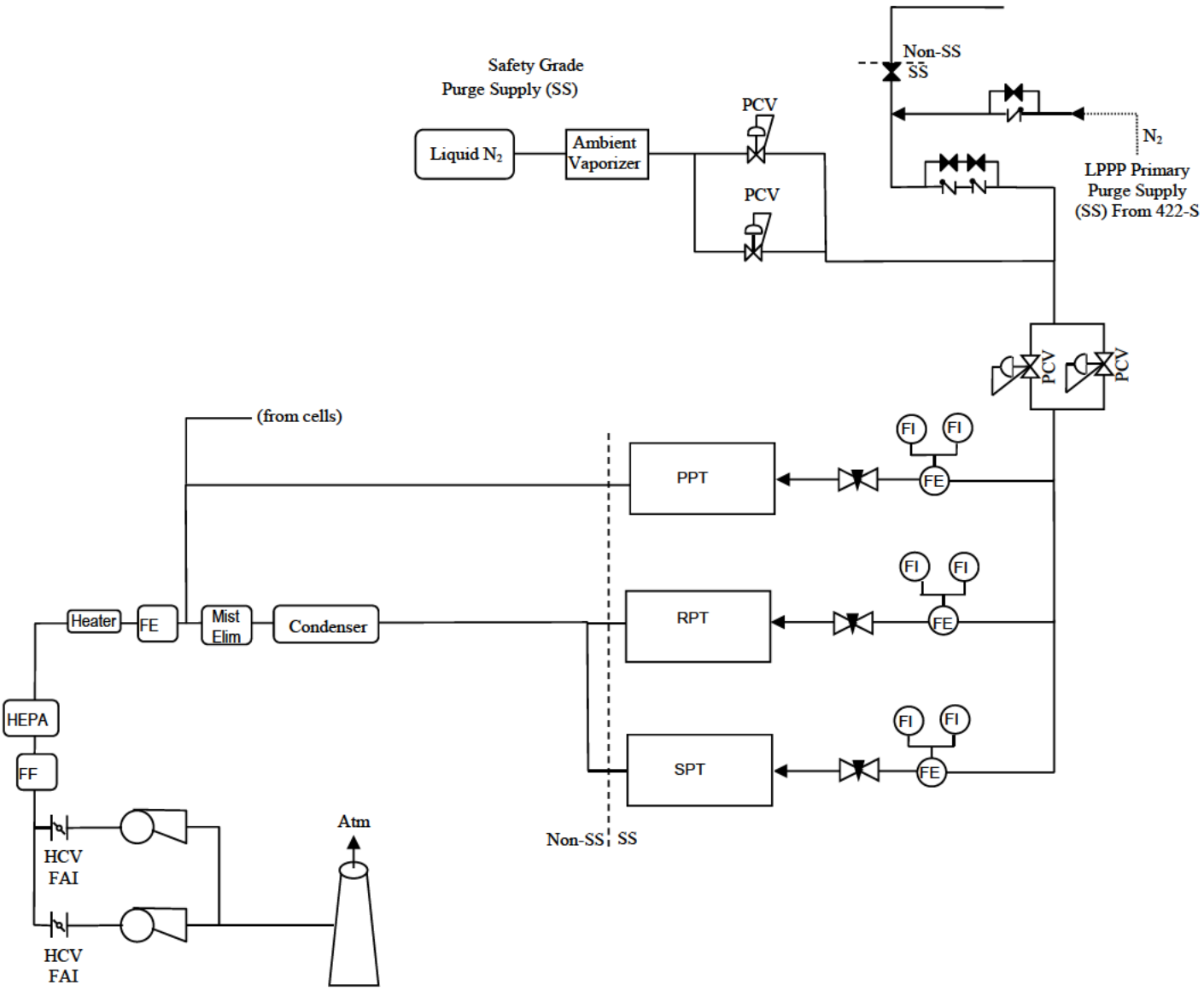

Figure 4.4-10 LPPP Primary Purge System and Safety Grade Purge System