U-DSA-H-00003
Revision 0
April 2018

Concentration, Storage, and Transfer Facilities
Documented Safety Analysis Addendum: Operation of the 242-25H Evaporator with Leak Sites

DISCLAIMER

This document was prepared by AECOM N&E Technical Services, LLC (N&E TS) under contract with Savannah River Remediation, LLC (SRR), subject to the warranty and other obligations of that contract and in furtherance of SRR's contract with the United States Department of Energy (DOE). N&E TS' findings represent its reasonable judgments within the time and budget context of its commission and utilizing the information available to it at the time. This document was prepared solely for the DOE for Contract DE-AC09-09SR22505.

Release to and Use by Third Parties. As it pertains to releases of this document to third parties, and the use of or reference to this document by such third parties in whole or in part, neither N&E TS, SRR, DOE, nor their respective officers, directors, employees, agents, consultants or personal services contractors (i) make any warranty, expressed or implied, (ii) assume any legal liability or responsibility for the accuracy, completeness, or usefulness, of any information, apparatus, product or process disclosed herein or (iii) represent that use of the same will not infringe privately owned rights. Reference herein to any specific commercial product, process, or service by trademark, name, manufacture or otherwise, does not necessarily constitute or imply endorsement, recommendation, or favoring of the same by N&E TS, SRR, DOE or their respective officers, directors, employees, agents, consultants or personal services contractors. The views and opinions of the authors expressed herein do not necessarily state or reflect those of the United States Government or any agency thereof.

Table of Contents

Table of Contents **3**
Acronyms and Abbreviations **6**
1.0 DSA Addendum Description **8**
2.0 Consolidated Hazards Analyses **9**
2.1 242-25H Evaporator Description 9
2.1.1 242-25H Evaporator Leak Sites Description 9
2.1.2 242-25H Evaporator Anticipated Operating Strategy with Leak Sites 9
2.2 Consolidated Hazards Analyses Process 10
2.3 Consolidated Hazards Analyses Results 10
3.0 Hazards and Accident Analyses Assessment **23**
3.1 Hazards and Accident Analyses Review 23
3.2 Flammable Vapor Concentration Determination 27
3.3 242-25H Evaporator Bottoms Inhalation Dose Potential and Total Effective Dose 28
3.4 242-25H Evaporator Configuration and Design Inputs 29
3.5 Hydrogen Release from Saltcake Leaked During 242-25H Evaporator Operation 29
3.6 242-25H Evaporator Residual Waste Volume and Equilibrium Hydrogen Concentration 29
3.7 242-25H Evaporator Hydrogen Generation Rates 30
3.8 242-25H Evaporator General Controls 30
3.9 242-25H Evaporator Pot Explosion 30
3.9.1 Scenario Development 30
3.9.2 Frequency Determination 34
3.9.3 Source Term Analysis 34
3.9.4 Consequence Analysis 38
3.9.5 Summary of Controls 39
3.10 242-25H Evaporator Cell Explosion 39
3.10.1 Scenario Development 39
3.10.2 Frequency Determination 45
3.10.3 Source Term Analysis 45
3.10.4 Consequence Analysis 48
3.10.5 Summary of Controls 49
3.11 242-25H Evaporator Overflow, Leaks, and Spills 50
3.11.1 Scenario Development 50
3.11.2 Frequency Determination 54
3.11.3 Source Term Analysis 54
3.11.4 Consequence Analysis 56
3.11.5 Summary of Controls 56
3.12 Tornado and High Winds Event 57
3.12.1 Tornado/High Winds Initiated 242-25H Evaporator Events 57
3.12.2 Evaporator Tornado/High Winds Consequence Analysis 58

3.12.3 Tornado/High Winds Controls 59
3.13 Seismic Event 59
3.13.1 Seismic Initiated 242-25H Evaporator Events 60
3.13.2 Evaporator Seismic Consequence Analysis 60
3.13.3 Seismic Controls 61
3.14 Wildland Fire 62
3.15 Loss of Offsite Power 63
3.16 Evaporator System Data 63
3.17 Airborne Radiological and Chemical Consequences for the DBAs 63
3.18 Offsite Radiological Consequence Analysis for the NPH DBAs 64
4.0 Safety Structures, Systems, and Components Assessment 65
4.1 Safety Structures, Systems, and Components Review 65
4.2 242-25H Evaporator Cell 66
4.2.1 Safety Function and Functional Requirements 66
4.2.2 System Description 67
4.2.3 System Evaluation 67
4.3 242-25H Evaporator Primary Ventilation System 69
4.3.1 Safety Function and Functional Requirements 69
4.3.2 System Description 69
4.3.3 System Evaluation 70
4.4 242-25H Evaporator Cell Sump Conductivity Probe and High Level Alarm 74
4.4.1 Safety Function and Functional Requirements 74
4.4.2 System Description 74
4.4.3 System Evaluation 74
5.0 Derivation of Technical Safety Requirements Assessment 77
5.1 Derivation of Technical Safety Requirements Review 77
5.2 Technical Safety Requirement Coverage 79
5.3 Derivation of Process Areas/Modes 79
5.3.1 Evaporator Modes Derivation 79
5.4 Facility Administrative Controls 81
5.4.1 Sludge Carryover Minimization Program (Specific Administrative Control 5.8.2.19) 81
5.4.2 Evaporator Feed Qualification Program (Specific Administrative Control 5.8.2.25) 82
5.4.3 Event Response Program (Specific Administrative Control 5.8.2.39) 82
5.4.4 Prohibited Operations (Specific Administrative Control 5.8.2.43) 83
5.4.5 Inhalation Dose Potential Control (Specific Administrative Control 5.8.2.51) 83
5.4.6 242-25H Evaporator Cell Salt Evaluation Program (Specific Administrative Control 5.8.2.56) 84
5.5 Minimum Shift Crew 85
5.6 Mercury Monitoring and Evaporator Systems Technical Safety Requirement Derivation 86
5.6.1 Evaporator Mercury Inventory (Limiting Condition for Operation 3.6.1) 86

5.6.2 Evaporator Cell Sumps (Limiting Condition for Operation 3.6.2) 86
5.6.3 Evaporator Cell Ventilation System (Limiting Condition for Operation 3.6.3) 88
5.6.4 Evaporator Cell Portable Ventilation Equipment (Limiting Condition for Operation 3.6.4) 91
5.7 Summary of Technical Safety Requirements 93
6.0 Prevention of Inadvertent Criticality Assessment 95
6.1 Prevention of Inadvertent Criticality Review 95
6.2 Operation of the 242-25H Evaporator with a Leak Inadvertent Criticality Review 95
6.2.1 Waste Storage (CSTF DSA Sections 6.3.1/6.4.1) 95
6.2.2 Saltcake Dissolution (CSTF DSA Sections 6.3.3/6.4.2) 96
6.2.3 Criticality Controls (CSTF DSA Section 6.5) 96
7.0 Balance of DSA Document Assessment 97
7.1 Balance of DSA Document Review 97
8.0 References 99

Acronyms and Abbreviations

AC	Administrative Control
ARF	Airborne Release Fraction
ARR	Airborne Release Rate
BDBA	Beyond Design Basis Accident
BEU	Beyond Extremely Unlikely
cfm	cubic feet per minute
CHA	Consolidated Hazards Analyses
CHAP	Consolidated Hazards Analyses Process
Ci	Curie
CSTF	Concentration, Storage, and Transfer Facilities
°C	degrees Celsius
DBA	Design Basis Accident
DBE	Design Basis Earthquake
DBT	Design Basis Tornado
DID/ITS	Defense-in-Depth/Important-to-Safety
DOE	Department of Energy
DR	Damage Ratio
DR	Design Requirement
DSA	Documented Safety Analysis
EG	Evaluation Guideline
ft^3	cubic foot
gal	gallon
gpm	gallons per minute
HE	Hazard Evaluation
HEPA	High-Efficiency Particulate Air
hr	hour
LCO	Limiting Condition for Operation
LEL	Lower Explosive Limit
LFL	Lower Flammability Limit
LPF	Leak Path Factor
M	molar
MAR	Material at Risk
MRT	Mercury Removal Tank

Acronyms and Abbreviations (cont'd)

N/A	Not Applicable
NCSE	Nuclear Criticality Safety Evaluation
NFPA	National Fire Protection Association
NPH	Natural Phenomena Hazard
PISA	Potential Inadequacy in the Safety Analysis
PMF	Probable Maximum Flood
PMP	Probable Maximum Precipitation
psig	pounds per square inch gauge
PVS	Primary Ventilation System
QA	Quality Assurance
rem	roentgen equivalent man
RF	Respirable Fraction
rpm	revolutions per minute
SAC	Specific Administrative Control
SC	Safety Class
scfm	standard cubic feet per minute
SpG	specific gravity
SR	Surveillance Requirement
SRR	Savannah River Remediation LLC
SRS	Savannah River Site
SS	Safety Significant
SSCs	Structures, Systems, and Components
ST	Source Term
TED	Total Effective Dose
TNT	Trinitrotoluene
TSR	Technical Safety Requirement
VFD	Variable Frequency Drive
wt. %	weight percent

1.0 DSA Addendum Description

The purpose of this document is to provide supplemental information to the Concentration, Storage, and Transfer Facilities (CSTF) Documented Safety Analysis (DSA), WSRC-SA-2002-00007 (Ref. 1), regarding operation of the 242-25H Evaporator with leak sites. This change to the CSTF DSA is being made via a DSA Addendum in accordance with Procedure Manual 11Q, Procedure 1.01 (Ref. 2). A DSA Addendum is the appropriate DSA change mechanism because the intent of this change is not to replace the long-term operating approach for the 242-25H Evaporator, but merely to reflect a short-term operating condition. This DSA Addendum will be superseded prior to or concurrent with implementation of the 2019 CSTF DSA Annual Update.

The scope of this DSA Addendum is limited to address only those activities that are both uniquely associated with operation of the 242-25H Evaporator with leak sites and not covered with the CSTF DSA. A Consolidated Hazards Analyses (CHA) has been performed to address operation of the 242-25H Evaporator with leak sites (Ref. 3). When addressing 242-25H Evaporator related hazards, this DSA Addendum will also consider the associated impacts from three related technical issues:

- *Hydrogen Generation Rate PISA Resolution* – When addressing 242-25H Evaporator hydrogen related hazards, this DSA Addendum will utilize thermolysis-related test results from 2017 (testing performed on Tank 38 waste and on waste simulants to resolve hydrogen generation issues raised in Potential Inadequacy in the Safety Analysis (PISA) PI-2017-0003 (Ref. 4)) to qualitatively address the thermolytic contribution to total hydrogen generation.
- *Input Deck Revalidation* – A recently completed overall revalidation of accident analysis inputs led to some inputs being changed to ensure consistent philosophy, to make minor corrections of calculated values, or to revisit the underlying technical basis for an input. Where applicable and appropriate, this DSA Addendum will use the revised inputs in approved accident analyses.
- *Revised Total Effective Dose (TED) Factors* – Where updated dose calculations are required, the calculations will use 1) the revised TED factors associated with site meteorology for Offsite receptors and 2) DOE-STD-1189 (Ref. 23) release parameters (*X/Q*) for Onsite receptors. The exception to this approach is the roll-up of Onsite receptor dose consequences associated with Natural Phenomena Hazard (NPH) events, which will continue to use the legacy dose factors to maintain a consistent basis between multiple events (this onsite NPH approach is used in the CSTF DSA [Ref. 1]). Additional discussion regarding the offsite radiological consequence analysis methodologies used in this DSA Addendum for the NPH DBAs is provided in DSA Addendum Section 3.18.

DSA Addendum Section 2.0 contains a description of the 242-25H Evaporator pot leak sites and anticipated operating strategy, along with a summary of the CHA (Ref. 3) that was performed covering operation of the 242-25H Evaporator with leak sites. DSA Addendum Sections 3.0 through 7.0 contain DSA supplemental information addressing

how specific material within the various DSA chapters (including the Hazards and Accident Analyses) is impacted by this DSA Addendum.

2.0 Consolidated Hazards Analyses

2.1 242-25H Evaporator Description

2.1.1 242-25H Evaporator Leak Sites Description

The 242-25H Evaporator concentrates waste to provide greater waste storage capacity by evaporating excess water from the waste. The 242-25H Evaporator is described in CSTF DSA Section 2.4.3, although information may be supplemented in this DSA Addendum. The 242-25H Evaporator vessel (i.e., pot) has a nominal capacity of 18,621 gallons. The (partially) insulated vessel is 14 feet in diameter and approximately 26.5 feet tall. The vessel is constructed of Alloy G-3 and varies in thickness from 5/16 inch to 9/16 inch. Four pedestals mounted on the floor of the evaporator cell and two trunnion guides provide lateral seismic support for the vessel.

The CHA for Operation of the 242-25H Evaporator with Leak Sites (Ref. 3) contains a description of the change in evaporator condition addressed by this DSA Addendum. In February 2016, a leak was discovered in the 242-25H Evaporator pot, allowing waste out of the primary containment of the evaporator vessel into the secondary concrete, stainless steel lined containment cell. Due to the evaporator vessel having a stainless steel seal welded insulation jacket, locating the specific leak location was masked by the insulation and steel jacket (collectively, lagging). The lagging was removed, the leak was identified, and a replacement bottom cone was welded as a repair using a robotic system. The pot repair was visually inspected and tested for leaks. No leaks were identified during the in-service leak test. The evaporator system continued to operate after passing the in-service leak test. Consequently, additional leak sites were discovered above the repair site days after becoming operational.

The 242-25H Evaporator pot leak sites became apparent after approximately 55 hours of operation at higher temperature and specific gravity (i.e., up to 135°C, 1.5 SpG). The leak sites are at or near original welds in the conical shell and relatively distant (i.e., feet) from the stiffener ring above and the new repair cap below.

2.1.2 242-25H Evaporator Anticipated Operating Strategy with Leak Sites

Having leak sites does not appreciably change how the 242-25H Evaporator System processes material. The evaporator pot leak sites were estimated to have a maximum estimated leak rate of 500 mL/day/leak site. At this leak rate, evaporator operation is expected to generate salt on the side of the cone and on the floor directly beneath the cone. This salt formation will require periodic cleaning to ensure the salt does not build-up past the administrative limit.

Cell cleaning will occur in periodic intervals based on accumulated salt volume. A cell cover will be pulled to allow access to the evaporator pot and evaporator cell sump. A flush lance will then be inserted into the cell to spray and dissolve any accumulated salt to the evaporator cell sump. The flush lance is expected to provide flush water at a nominal flow of 100 gallons per minute (gpm). The sump will be periodically jetted

during cleaning activities. Cell cleaning will continue until salt in the evaporator cell is dissolved, flushed to the sump, and jetted out of the evaporator cell sump.

2.2 Consolidated Hazards Analyses Process

A CHA was performed covering operation of the 242-25H Evaporator with leak sites (Ref. 3). The scope of the CHA included the following:

- Activities associated with operation of the 242-25H Evaporator with leak sites.
- NPH events (e.g., earthquakes, tornadoes, wildland fire).
- Facility activities or systems that pose no hazards or only pose common standard industrial hazards addressed by other programs, addressed in other CHAs, or regulations (e.g., Occupational Safety and Health Administration, Department of Transportation) were examined only if a loss of control of the activity or system could result in a radiological or chemical release.

The scope of the CHA did not include hazards screened as common hazards or willful acts, such as sabotage. Malevolent acts are not addressed in the CHA.

2.3 Consolidated Hazards Analyses Results

A Hazard Identification Table was used to document the hazards for operation of the 242-25H Evaporator with leak sites process by form, type, source, and location. The CHA team reviewed existing hazard analyses that have evaluated the 242-25H Evaporator in the CSTF. DSA Addendum Table 2.3-1 documents the existing hazard analyses review providing justification of what did or did not need further evaluation. This review included events not requiring controls in the CSTF DSA due to configuration/low risk. DSA Addendum Table 2.3-2 lists the events identified from the review that require further evaluation in the CHA (Ref. 3).

The CHA was used to identify potential hazardous events associated with operation of the 242-25H Evaporator with leak sites and to select potential control strategies that eliminate the hazards and resultant hazardous situations, reduce the likelihood of occurrence of the event, or mitigate the consequences of the event. Event numbers were assigned according to specific operations. The CHA results are documented in the Hazard Evaluation (HE) Tables in Appendix C of the CHA (Ref. 3). A list of the HE Table events and the associated dispositions is provided in DSA Addendum Table 2.3-3. The Safety Class (SC) and Safety Significant (SS) Structures, Systems, and Components (SSCs) and credited Administrative Controls (ACs) specific to Hazard Analysis (HA) events from the CHA for Operation of the 242-25H Evaporator with Leak Sites (Ref. 3) are identified and presented in DSA Addendum Table 2.3-4.

Table 2.3-1: 242-25H Events evaluated in CHA

242-25H Evaporator HA Events	Description	CSTF DSA Table	Applicability to 242-25H Operate with leaks CHA scope	CHA Coverage
EV3-1	Fire in the evaporator cell damages evaporator vessel and causes release of radiological/ hazardous material during operation	3.3-11	CHA scope does not increase the combustible materials present in cell; thus, no impact.	N/A
EV3-1a	Fire in the evaporator cell damages evaporator vessel and causes release of mercury vapor	3.3-11	CHA scope does not increase the combustible materials present in cell; thus, no impact.	N/A
EV3-2	Fire in evaporator building (outside of cell) propagates to cell and damages evaporator vessel and causes release of radiological/ hazardous material during operation	3.3-11	CHA scope may impact during planned cell cleaning activities (cell cover required to be removed). However, this event only addresses evaporator operation. Planned cell cleaning will occur when evaporator is shut down.	N/A
EV3-3	Hydrogen buildups in the evaporator vessel leads to explosion (deflagration) in the evaporator vessel causing release of radiological/hazardous material	N/A	CHA scope will not change the frequency of event (Beyond Extremely Unlikely [BEU]); thus, no impact.	N/A
EV3-3a	Hydrogen buildups in the evaporator vessel leads to explosion (deflagration) in the evaporator vessel causing release of radiological/hazardous material	3.3-12	CHA scope may increase vapor volume (leak down) increasing risk.	EOWL-2-001
EV3-4	Flammable gas (organic vapor) builds up in the evaporator and ignites resulting in an explosion	3.3-12	CHA scope may increase vapor volume (leak down) increasing risk.	EOWL-2-001
EV3-4a	Deflagration in the evaporator cell damages evaporator vessel and causes release of radiological/ hazardous material due to a waste leak	3.3-12	CHA scope increases hydrogen generation rate from thermolytic degradation of organics resulting in the cell explosion consequences to exceed Evaluation Guidelines (EGs).	EOWL-2-003 EOWL-2-004
EV3-4b	Hydrogen accumulates in evaporator vessel thermowell resulting in an explosion and release of waste	N/A	CHA scope does not impact initiators to event; thus, no impact.	N/A
EV3-4c	Hydrogen accumulates in dip tubes resulting in an explosion and release of waste	N/A	CHA scope does not impact initiators to event; thus, no impact.	N/A
EV3-4d	Hydrogen accumulates in Evaporator piping (tube bundle, warming coils) resulting in an explosion and release of waste	N/A	CHA scope does not impact initiators to event; thus, no impact.	N/A
EV3-5	Feed to evaporator causes overfill of the evaporator vessel leading to a release of radiological/hazardous material	3.2-12	CHA scope does not impact initiators to event; thus, no impact.	N/A
EV3-6	Feed to evaporator causes overfill of the evaporator vessel leading to a release of radiological/hazardous material	3.2-12	CHA scope does not impact initiators to event; thus, no impact.	N/A
EV3-7	Feed to evaporator causes release of radiological/hazardous material into the evaporator cell	3.2-12	CHA scope does not impact initiators to event; thus, no impact.	N/A
EV3-8	High feed flow results in an overfill of the evaporator vessel leads to release of radiological/hazardous material	3.2-12	CHA scope does not impact initiators to event; thus, no impact.	N/A
EV3-10	Flush water added through the feed nozzle results in an overfill of the evaporator vessel leading to a release of radiological/hazardous material	3.2-12	CHA scope does not impact initiators to event; thus, no impact.	N/A
EV3-11	Low pressure steam or condensate leak into evaporator from warming coil causes overfill of the evaporator vessel leading to a release of radiological/hazardous material	3.3-11	The inlet and outlet of the warming coils for the 242-25H Evaporator has been permanently isolated. CHA scope does not change configuration; thus, no impact.	N/A

242-25H Evaporator HA Events	Description	CSTF DSA Table	Applicability to 242-25H Operate with leaks CHA scope	CHA Coverage
EV3-11a	Low pressure steam or condensate leak into evaporator from tube bundles causes overfill of the evaporator vessel leading to a release of radiological/hazardous material	3.3-11	CHA scope does not impact initiators to event; thus, no impact.	N/A
EV3-12	Flushing dip tubes for an extended period of time results in an overfill of the evaporator vessel leading to a release of radiological/hazardous material	3.2-12	CHA scope does not impact initiators to event; thus, no impact.	N/A
EV3-13	Automatic flush water leaks into dip tubes results in an incorrect level reading and causes the evaporator to overfill	3.2-12	CHA scope does not impact initiators to event; thus, no impact.	N/A
EV3-14	Flushwater added through demister spray causes overfill of the evaporator vessel leading to a release of radiological/hazardous material	3.2-12	CHA scope does not impact initiators to event; thus, no impact.	N/A
EV3-15	Water added to the evaporator vessel during operation via the flush water addition line results in an overfill of the evaporator vessel and leads to release of radiological/hazardous material	3.2-12	CHA scope does not impact initiators to event; thus, no impact	N/A
EV3-16	Evaporator is overfilled during a gravity drain line backflush leads to release of radiological/hazardous material	3.2-12	CHA scope does not impact initiators to event; thus, no impact.	N/A
EV3-17	Feed from Waste Tank 32H is pumped into the evaporator vessel at a rate greater than which it can exit, leading to vessel overpressurization. The vessel containment boundary fails releasing radiological material	3.3-12	CHA scope does not impact initiators to event; thus, no impact.	Initiator to Events EOWL-3-001 EOWL-3-002
EV3-18	Flushwater added through the feed nozzle causes over-pressurization of the evaporator leads to evaporator breach resulting in release of radiological/ hazardous material	3.3-12	CHA scope does not impact initiators to event; thus, no impact.	Initiator to Events EOWL-3-001 EOWL-3-002
EV3-19	Warming coil ruptures ejecting high pressure steam and/or air to the evaporator and causes the vessel to overpressurize and releases radiological/ hazardous material	3.3-11	The inlet and outlet of the warming coils for the 242-25H Evaporator has been permanently isolated. CHA scope does not change configuration; thus, no impact.	N/A
EV3-20	Waterhammer ruptures the warming coil injecting steam and/or air into evaporator vessel resulting in the overpressurization of the vessel	3.3-11	The inlet and outlet of the warming coils for the 242-25H Evaporator has been permanently isolated. CHA scope does not change configuration; thus, no impact.	N/A
EV3-22	Tube bundle ruptures ejecting high pressure steam and/or air to the evaporator and causes the vessel to overpressurize and releases radiological/ hazardous material during operation	3.3-13	CHA scope does not impact initiators to event. 3 gal per day leak down during operation will not result in tube bundle being uncovered during operation; thus, no impact.	Initiator to Events EOWL-3-001 EOWL-3-002
EV3-23	Low liquid level in evaporator uncovers the tube bundle resulting in a mechanical failure (rupture) of the tube and the overpressurization of the evaporator [High pressure steam/air]	3.3-13	CHA scope does not impact initiators to event. 3 gal per day leak down during operation will not result in tube bundle being uncovered during operation; thus, no impact.	Initiator to Events EOWL-3-001 EOWL-3-002

242-25H Evaporator HA Events	Description	CSTF DSA Table	Applicability to 242-25H Operate with leaks CHA scope	CHA Coverage
EV3-24	Instrument air freezes and results in an incorrect evaporator level reading which leads to an uncovered tube bundle which induces tube failure and causes the evaporator vessel to overpressurize	3.3-13	CHA scope does not impact initiators to event. 3 gal per day leak down during operation will not result in tube bundle being uncovered during operation; thus, no impact.	Initiator to Events EOWL-3-001 EOWL-3-002
EV3-25	Tube bundle breaks during steam shocking to remove scale and results in the overpressurization of the evaporator vessel when the evaporator goes back into service.	3.3-13	CHA scope does not impact initiators to event; thus, no impact.	Initiator to Events EOWL-3-001 EOWL-3-002
EV3-26	Waterhammer ruptures the tube bundle injecting steam and/or air into evaporator vessel resulting in the overpressurization of the vessel during operation	3.3-12	CHA scope does not impact initiators to event; thus, no impact.	Initiator to Events EOWL-3-001 EOWL-3-002
EV3-27	Annual water-leak check cracks the tube bundle and results in the overpressurization of the evaporator vessel when the evaporator goes back into service	N/A	CHA scope will not change the frequency of event (BEU); thus, no impact.	N/A
EV3-28	Flushing dip tubes for an extended period of time results in over-pressurization of the evaporator leading to evaporator breach resulting in release of radiological/ hazardous material	3.3-12	CHA scope does not impact initiators to event; thus, no impact.	Initiator to Events EOWL-3-001 EOWL-3-002
EV3-29	High instrument air pressure through dip tubes results in over-pressurization of the evaporator and leads to evaporator breach resulting in release of radiological/ hazardous material	N/A	CHA scope will not change the frequency of event (BEU); thus, no impact.	N/A
EV3-30	High instrument steam pressure through dip tubes results in over-pressurization of the evaporator and leads to evaporator breach resulting in release of radiological/ hazardous material	N/A	CHA scope will not change the frequency of event (BEU); thus, no impact.	N/A
EV3-31	High flow through the steam lance (steam and/or air) results in over-pressurization of the evaporator and leads to evaporator breach resulting in release of radiological/ hazardous material	3.3-13	CHA scope does not impact initiators to event; thus, no impact.	Initiator to Events EOWL-3-001 EOWL-3-002
EV3-32	Steam lance ruptures near operating level ejecting high pressure steam and/or air to the evaporator resulting in over-pressurization of the evaporator and leads to evaporator breach resulting in release of radiological/ hazardous material	N/A	CHA scope will not change the frequency of event (BEU); thus, no impact.	N/A
EV3-33	The steam lift line breaks ejecting high pressure steam/air into the evaporator and results in over-pressurization of the evaporator leading to evaporator breach resulting in release of radiological/ hazardous material	N/A	CHA scope will not change the frequency of event (BEU); thus, no impact.	N/A

242-25H Evaporator HA Events	Description	CSTF DSA Table	Applicability to 242-25H Operate with leaks CHA scope	CHA Coverage
EV3-34	Flushwater added through demister spray causes overpressurization of the evaporator leading to a release of radiological/ hazardous material during operation	3.3-12	CHA scope does not impact initiators to event; thus, no impact.	Initiator to Events EOWL-3-001 EOWL-3-002
EV3-35	Plugged demister causes overpressurization of the evaporator vessel and leads to a release of radiological/ hazardous material	N/A	CHA scope will not change the frequency of event (BEU); thus, no impact.	N/A
EV3-37	Low or no cooling water flow to the overhead condenser results in the buildup of back pressure to the evaporator and the overpressurization of the evaporator vessel leading to a release of radiological/ hazardous material during operation	3.3-12	CHA scope does not impact initiators to event; thus, no impact.	Initiator to Events EOWL-3-001 EOWL-3-002
EV3-38	Cooling water pipe/tube ruptures in the condenser and results in an evaporator overpressurization leading to a release of radiological/ hazardous material during operation	3.3-12	CHA scope does not impact initiators to event; thus, no impact.	Initiator to Events EOWL-3-001 EOWL-3-002
EV3-39	Blocked overhead manual valves result in an evaporator overpressurization and leads to a release of radiological/ hazardous material during operation	3.3-12	CHA scope does not impact initiators to event; thus, no impact.	Initiator to Events EOWL-3-001 EOWL-3-002
EV3-40	Water added to the evaporator vessel during operation via the flush water addition line results in an overpressurization of the evaporator vessel leads to release of radiological/hazardous material	3.3-12	CHA scope does not impact initiators to event; thus, no impact.	Initiator to Events EOWL-3-001 EOWL-3-002
EV3-41	Evaporator is overpressurized during a gravity drain line backflush and leads to a release of radiological/hazardous material	3.3-12	CHA scope does not impact initiators to event; thus, no impact.	Initiator to Events EOWL-3-001 EOWL-3-002
EV3-42	The overheads are diverted to Tank 32 while the cell sumps are simultaneously being pumped. This leads to a backup of the overheads into the condenser and cause the evaporator to overpressurize	N/A	CHA scope will not change the frequency of event (BEU); thus, no impact.	N/A
EV3-43	The flash tank and overheads simultaneously divert to Tank 32 and results in a backup into the overheads and the overpressurization of the evaporator	N/A	CHA scope will not change the frequency of event (BEU); thus, no impact.	N/A
EV3-44	The addition of caustic into the evaporator results in a chemical reaction which overpressurizes the evaporator vessel	N/A	CHA scope will not change the frequency of event (BEU); thus, no impact.	N/A
EV3-45	The addition of anti-foam into the evaporator results in a chemical reaction which overpressurizes the evaporator vessel	N/A	CHA scope will not change the frequency of event (BEU); thus, no impact.	N/A
EV3-46	Leak from evaporator vessel during operation causes release of radiological/ hazardous material	3.3-12	CHA scope is within the bounds of the event. However, two additional leak events are addressed in CHA to cover unique aspects of new leak sites.	EOWL-3-001 EOWL-3-002

242-25H Evaporator HA Events	Description	CSTF DSA Table	Applicability to 242-25H Operate with leaks CHA scope	CHA Coverage
EV3-46a	Leak from pipes, jumpers, or valves to the evaporator vessel (away from evaporator vessel) causes release of radiological/ hazardous material	3.3-12	CHA scope does not impact initiators to event; thus, no impact.	N/A
EV3-47	Migration through the seal pot provides a path for a radioactive release from the evaporator	N/A	CHA scope does not impact initiators to event; thus, no impact.	N/A
EV3-48	Release of mercury vapor from the evaporator	3.3-12	CHA scope does not impact initiators to event; thus, no impact.	N/A
EV3-50	High pressure steam through the steam lance or lift leads to excessive boiling in the evaporator (evaporator operating beyond capacity) resulting in carryover of radioactive material into the overheads or evaporator cell	N/A	CHA scope does not impact initiators to event; thus, no impact.	N/A
EV3-52	Exposure to hazardous chemicals (anti-foam)	N/A	CHA scope does not impact initiators to event; thus, no impact.	N/A
EV3-54	Direct chemical exposure from spilling of caustic on operator during chemical addition	N/A	CHA scope does not impact initiators to event; thus, no impact.	N/A
EV3-55	Inadvertent entry into the evaporator cell results in an exposure to radiological material	N/A	CHA scope does not impact initiators to event; thus, no impact.	N/A
EV3-56	High steam flow through the tube bundle leads to excessive boiling in the evaporator (evaporator operating beyond capacity) resulting in carryover of radioactive material into the overheads	N/A	CHA scope does not impact initiators to event; thus, no impact.	N/A
EV3-57	Contamination of the tube bundle allows contamination migration into the steam system/segregated water system	N/A	CHA scope does not impact initiators to event; thus, no impact.	N/A
EV3-58	Sludge in feed tank is pumped to evaporator and results in an increase of radioactive material in the evaporator	N/A	CHA scope does not impact initiators to event; thus, no impact.	N/A
EV3-59	Radioactive contamination backflow into dip tube instrument air line	N/A	CHA scope does not impact initiators to event; thus, no impact.	N/A
EV3-60	Leak into warming coil allows radioactive contamination into the warming coil steam or condensate system or release of radiological/ hazardous material	3.3-11	The inlet and outlet of the warming coils for the 242-25H Evaporator has been permanently isolated. CHA scope does not change configuration; thus, no impact.	N/A
EV3-60a	Leak from warming coil allows radioactive contamination into the warming coil steam/air system or release of radiological/ hazardous material	3.3-11	The inlet and outlet of the warming coils for the 242-25H Evaporator has been permanently isolated. CHA scope does not change configuration; thus, no impact.	N/A
EV3-62	Suckback through the lance to the gang valves outside the cell results in an external exposure	N/A	CHA scope does not impact initiators to event; thus, no impact.	N/A
EV3-62a	Suckback through the lance to the gang valves outside the cell results in an external exposure	N/A	CHA scope does not impact initiators to event; thus, no impact.	N/A
EV3-63	Evaporator waste material is pushed back to the gang valves when the gravity drain lines are being flushed while the evaporator is out of service	N/A	CHA scope does not impact initiators to event; thus, no impact.	N/A
EV3-64	Suckback of evaporator waste material to gang valves when shutting down the steam lift	N/A	CHA scope does not impact initiators to event; thus, no impact.	N/A
EV3-64a	Suckback of evaporator waste material to gang valves when shutting down the steam lift	N/A	CHA scope does not impact initiators to event; thus, no impact.	N/A
EV3-65	Maintenance personnel contaminated when removing evaporator components such as thermocouples	N/A	CHA scope does not impact initiators to event; thus, no impact.	N/A

242-25H Evaporator HA Events	Description	CSTF DSA Table	Applicability to 242-25H Operate with leaks CHA scope	CHA Coverage
EV3-66	Maintenance personnel is contaminated when servicing contaminated components (e.g., cell sump pump)	N/A	CHA scope does not impact initiators to event; thus, no impact.	N/A
EV3-67	Buildup of/plate-out of uranium silicate results in poor evaporator performance/criticality in evaporator during operation	3.3-12	CHA scope does not impact initiators to event; thus, no impact.	N/A
EV3-67a	Criticality in evaporator from buildup of sludge during operation	3.3-12	CHA scope does not impact initiators to event; thus, no impact.	N/A
EV3-68	Plate-out of fissile radionuclides on evaporator components result in a criticality event during operation	3.3-12	CHA scope does not impact initiators to event; thus, no impact.	N/A
EV3-69	Feed material is concentrated down to a critically unsafe concentration during operation	3.3-12	CHA scope does not impact initiators to event; thus, no impact.	N/A
EV3-70	Crane, cell cover, or other heavy load drops onto the evaporator rupturing the evaporator vessel during operation	3.3-12	CHA scope does not impact initiators to event; thus, no impact.	N/A
EV3-71	Structural damage to evaporator vessel causes release of radiological/ hazardous material during operation	3.3-11	CHA scope will not change the frequency of event (BEU); thus, no impact.	N/A
EV3-72	Structural damage to evaporator vessel causes release of radiological/ hazardous material followed by a fire/explosion during operation	3.3-11	CHA scope will not change the frequency of event (BEU); thus, no impact.	N/A
EV3-73	Structural damage to evaporator building causes release of radiological/hazardous material followed by a fire/explosion during operation	3.3-11	CHA scope will not change the frequency of event (BEU); thus, no impact.	N/A
EV3-74	Structural damage to evaporator building causes release of radiological/hazardous material followed by a fire/explosion during operation	3.3-11	CHA scope will not change the size of the evaporator structure; therefore no change in impact frequency of aircraft; thus, no impact.	N/A
EV3-75	External fire engulfs evaporator building and results in the release of radiological/ hazardous material during operation	3.3-11	CHA scope may impact during planned cell cleaning activities (cell cover required to be removed). However, this event only addresses evaporator operation. Planned cell cleaning will occur when evaporator is shut down	N/A
EV3-76	External fire engulfs evaporator building and results in the release of radiological/hazardous material during operation	3.3-13	CHA scope increases Material at Risk (MAR) for Cell Explosion.	EOWL-7-003
EV3-77	Structural damage to evaporator building causes release of radiological/hazardous material during operation	3.3-13	CHA scope increases MAR for Cell Explosion.	EOWL-7-002
EV3-78	Earthquake causes rupture of warming coil or tube bundle, or other related evaporator components ejecting high pressure steam and/or air into the evaporator results in over-pressurization leads to evaporator breach resulting in release of radiological/ hazardous material during operation	3.3-13	CHA scope does not impact initiators to event; thus, no impact.	N/A
EV3-78a	Structural damage to evaporator building causes release of radiological/hazardous material during operation	3.3-12	CHA scope does not impact initiators to event; thus, no impact.	N/A
EV3-79	Earthquake induced fire/explosion in or around vessel during operation	3.3-12	CHA scope increases hydrogen generation rate from thermolytic degradation of organics resulting in the cell explosion consequences to exceed EGs.	EOWL-7-001

242-25H Evaporator HA Events	Description	CSTF DSA Table	Applicability to 242-25H Operate with leaks CHA scope	CHA Coverage
EV3-80	Lightning causes structural damage to evaporator building and results in the release of radiological/hazardous material during operation	3.3-11	CHA scope will not change the frequency of event (BEU); thus, no impact.	N/A
EV3-81	Lightning followed by explosion and subsequent fire causes structural damage to evaporator building and results in the release of radiological/hazardous material during operation	3.3-11	CHA scope will not change the frequency of event (BEU); thus, no impact.	N/A
EC3-1	A fire in evaporator cell results in release from High-Efficiency Particulate Air (HEPA) bank plus residual	3.3-13	CHA scope does not impact initiators to event; thus, no impact.	N/A
EC3-2	Fire in the HEPA bank leads to release of radiological/ hazardous material	N/A	CHA scope does not impact initiators to event; thus, no impact.	N/A
EC3-4	Leak of the evaporator cell releases radiological/ hazardous material	N/A	CHA scope does not impact initiators to event; thus, no impact. However, added event to address flammable vapor buildup in underliner sump from leak.	EOWL-2-002
EC3-5	Steam sparging of sump results in release of radiological/ hazardous material	N/A	CHA scope does not impact initiators to event; thus, no impact.	N/A
EC3-6	Loss of ventilation flow leads to release of radiological/ hazardous material	N/A	CHA scope does not impact initiators to event; thus, no impact.	N/A
EC3-7	Plugged HEPA filter causes filter blowout and subsequent release of radiological/ hazardous material	N/A	CHA scope does not impact initiators to event; thus, no impact.	N/A
EC3-8	Leaks in HEPA filter system cause release of radiological/ hazardous material	N/A	CHA scope does not impact initiators to event; thus, no impact.	N/A
EC3-9	Mishandling of loaded HEPA filter	N/A	CHA scope does not impact initiators to event; thus, no impact.	N/A
EC3-10	Contamination of uncontaminated system by a suckback to gang valve	N/A	CHA scope does not impact initiators to event; thus, no impact.	N/A
EC3-11	Radiological exposure from HEPA filter contents	N/A	CHA scope does not impact initiators to event; thus, no impact.	N/A
EC3-12	Criticality occurs on the HEPA filter	N/A	CHA scope does not impact initiators to event; thus, no impact.	N/A
EC3-13	Structural damage to ventilation system	N/A	CHA scope does not impact initiators to event; thus, no impact.	N/A
EC3-14	Structural damage to ventilation system	N/A	CHA scope does not impact initiators to event; thus, no impact.	N/A
EC3-15	Structural damage to ventilation system followed by a fire/explosion	N/A	CHA scope does not impact initiators to event; thus, no impact.	N/A
EC3-16	Radiological release from surface runoff of flooded evaporator cell during feed transfer	3.3-12	CHA scope does not impact initiators to event; thus, no impact.	N/A
OH3-1	A fire starts in the evaporator service building, spreads to overhead cell and damage mercury removal tank, overhead tanks, and related components and causes release of radiological/ hazardous material during operation (event assumes contamination is present)	N/A	CHA scope does not impact initiators to event; thus, no impact.	N/A
OH3-2	A fire starts in the Overhead System cell damages overhead tanks and/or mercury removal tank and causes release of radiological/ hazardous material during operation (event assumes contamination is present)	N/A	CHA scope does not impact initiators to event; thus, no impact.	N/A
OH3-3	Fire in condenser cell damages condenser and causes release of radiological/ hazardous material during operation (event assumes contamination is present)	N/A	CHA scope does not impact initiators to event; thus, no impact.	N/A

242-25H Evaporator HA Events	Description	CSTF DSA Table	Applicability to 242-25H Operate with leaks CHA scope	CHA Coverage
OH3-3a	Fire in condenser cell damages condenser and causes release of mercury vapor	3.3-12	CHA scope does not impact initiators to event; thus, no impact.	N/A
OH3-4	Hydrogen builds up in the condenser leads to explosion (deflagration) in the condenser and causes release of radiological/hazardous material	N/A	CHA scope does not impact initiators to event; thus, no impact.	N/A
OH3-4a	Hydrogen accumulates in Evaporator piping (condenser, overheads) resulting in an explosion and release of waste	N/A	CHA scope does not impact initiators to event; thus, no impact.	N/A
OH3-5	Contents of the mercury removal tank are spilled	N/A	CHA scope does not impact initiators to event; thus, no impact.	N/A
OH3-6	Leak from tanks, related connections, or pipes on overhead tanks causes release of radiological/ hazardous material during operation	N/A	CHA scope does not impact initiators to event; thus, no impact.	N/A
OH3-7	The in-service overhead tank is overfilled and spills to the sump during operation	N/A	CHA scope does not impact initiators to event; thus, no impact.	N/A
OH3-8	The overhead cell sump overfills due to spill during operation	N/A	CHA scope does not impact initiators to event; thus, no impact.	N/A
OH3-9	Debris clogs sump pump which could result in a potential radiological overflow during operation	N/A	CHA scope does not impact initiators to event; thus, no impact.	N/A
OH3-10	Loss of instrument air results in the loss of tank level indication leading to an overfill of the overhead tanks during operation (with overheads for worse case)	N/A	CHA scope does not impact initiators to event; thus, no impact.	N/A
OH3-11	The addition of flush water to overheads while operating leads to an overfill of the overhead tanks	N/A	CHA scope does not impact initiators to event; thus, no impact.	N/A
OH3-12	Leak from condenser, pipes, or related connections causes release of radiological/ hazardous material during operation	N/A	CHA scope does not impact initiators to event; thus, no impact.	N/A
OH3-13	Migration of radioactive contaminants into the cooling water system	N/A	CHA scope does not impact initiators to event; thus, no impact.	N/A
OH3-14	Chemical exposure to liquid mercury	N/A	CHA scope does not impact initiators to event; thus, no impact.	N/A
OH3-15	Foaming in evaporator results in the carryover of radioactive material into the overheads	N/A	CHA scope does not impact initiators to event; thus, no impact.	N/A
OH3-16	Poor demister performance during startup/ shutdown results in carryover of contaminants into the overheads	N/A	CHA scope does not impact initiators to event; thus, no impact.	N/A
OH3-17	A higher level/concentration of waste than the evaporator was designed to handle results in an increase in carryover to the overheads	N/A	CHA scope does not impact initiators to event; thus, no impact.	N/A
OH3-18	Rigorous boiling which produces more vapor than the evaporator is designed to handle leads to carryover and evaporator vessel overpressurization	N/A	CHA scope does not impact initiators to event; thus, no impact.	N/A
OH3-19	Buildup of particulates on the demister results in reduced efficiency and carryover of Cs-137 into the overheads, which can lead to personnel exposure	N/A	CHA scope does not impact initiators to event; thus, no impact.	N/A
OH3-20	Startup leads to carryover into overhead tanks	N/A	CHA scope does not impact initiators to event; thus, no impact.	N/A
OH3-23	Potential contamination of flash tank due to pushback from overheads	N/A	CHA scope does not impact initiators to event; thus, no impact.	N/A
OH3-24	Failure to add fungicide leads to biological growth in cooling water tower and results in possible biological hazards (e.g., Legionnaire's disease)	N/A	CHA scope does not impact initiators to event; thus, no impact.	N/A
OH3-25	Structural damage to overhead components including the condenser, mercury removal tank, overhead tanks, etc. during operation (mercury removal tank is the worst case)	N/A	CHA scope does not impact initiators to event; thus, no impact.	N/A

242-25H Evaporator HA Events	Description	CSTF DSA Table	Applicability to 242-25H Operate with leaks CHA scope	CHA Coverage
OH3-26	Structural damage to overhead components including the condenser, mercury removal tank, overhead tanks, etc. during operation	N/A	CHA scope does not impact initiators to event; thus, no impact.	N/A
OH3-27	Structural damage to overhead components including the condenser, mercury removal tank, overhead tanks, etc. during operation followed by a fire/explosion (mercury removal tank is the worst case)	3.3-11	CHA scope does not impact initiators to event; thus, no impact.	N/A
OH3-28	Ruptured overhead piping or tank(s) (mercury removal tank is the worst case) spills potentially contaminated liquid/mercury during operation	N/A	CHA scope does not impact initiators to event; thus, no impact.	N/A
TFHG-1-001	An incipient fire in the Transfer Facilities results in a release of mercury vapor (no breach of transfer lines).	N/A	CHA scope is not expected to impact MAR (mercury concentration in waste); thus, no impact.	N/A
TFHG-3-001	Slow leak either directly into the Transfer Facilities or into the transfer line jacket which drains material into the Transfer Facilities resulting in a release of mercury vapor.	N/A	CHA scope is not expected to impact MAR (mercury concentration in waste); thus, no impact.	N/A

Table 2.3-2: DSA HA Events Identified as Requiring Further Evaluation in the CHA

Event #	Description
EV3-3a	Hydrogen buildups in the evaporator vessel leads to explosion (deflagration) in the evaporator vessel causing release of radiological/ hazardous material
EV3-4	Flammable gas (organic vapor) builds up in the evaporator and ignites resulting in an explosion
EV3-4a	Deflagration in the evaporator cell damages evaporator vessel and causes release of radiological/ hazardous material due to a waste leak
EV3-46	Leak from evaporator vessel during operation causes release of radiological/ hazardous material
EV3-76	External fire engulfs evaporator building and results in the release of radiological/hazardous material during operation
EV3-77	Structural damage to evaporator building causes release of radiological/hazardous material during operation
EV3-79	Earthquake induced fire/explosion in or around vessel during operation
EC3-4	Leak of the evaporator cell releases radiological/ hazardous material

Table 2.3-3: DSA Addendum Disposition of CHA Events

Event #	CHA Event	Disposition
EOWL-2-001	Evaporator Pot Explosion	No further analysis required based on Consolidated Hazards Analyses Process (CHAP) analysis. Additional analysis is provided in DSA Addendum Section 3.9 (242-25H Evaporator Pot Explosion) to address the impact of changes to 242-25H Evaporator hydrogen generation rate methodology.
EOWL-2-002	Evaporator Cell Underliner Sump Explosion	No further analysis required based on CHAP analysis.
EOWL-2-003	Evaporator Cell Explosion (non-NPH)	Further analysis is provided in DSA Addendum Section 3.10 (242-25H Evaporator Cell Explosion).
EOWL-2-004	Evaporator Cell Explosion (Trapped Gas Release During Cleaning)	No further analysis required based on CHAP analysis.
EOWL-3-001	Evaporator Vessel Leak	No further analysis required based on CHAP analysis. Additional analysis is provided in DSA Addendum Section 3.11 (242-25H Evaporator Overflow, Leaks, and Spills) to address the impact of updated 242-25H Evaporator inputs.
EOWL-3-002	Evaporator Vessel Overpressure	No further analysis required based on CHAP analysis. Additional analysis is provided in DSA Addendum Section 3.11 (242-25H Evaporator Overflow, Leaks, and Spills) to address the impact of updated 242-25H Evaporator inputs.
EOWL-3-003	Evaporator Cell Cover Drop	No further analysis required based on CHAP analysis. Additional analysis is provided in DSA Addendum Section 3.11 (242-25H Evaporator Overflow, Leaks, and Spills) to address the impact of updated 242-25H Evaporator inputs.
EOWL-4-001	Evaporator Cell Salt Direct Exposure	No further analysis required based on CHAP analysis.
EOWL-6-001	Evaporator Cell Explosion (Loss of Offsite Power)	No further analysis required based on CHAP analysis. Additional analysis is provided in DSA Addendum Section 3.15 (Loss of Offsite Power) to address the impact of changes to 242-25H Evaporator hydrogen generation rate methodology.
EOWL-7-001	Evaporator Cell Explosion (Seismic)	Further analysis is provided in DSA Addendum Section 3.13 (Seismic Event).
EOWL-7-002	Evaporator Cell Explosion (Tornado/High Winds)	Further analysis is provided in DSA Addendum Section 3.12 (Tornado and High Winds Event).
EOWL-7-003	Evaporator Cell Explosion (Wildland Fire)	Further analysis is provided in DSA Addendum Section 3.14 (Wildland Fire).

Table 2.3-4: Mitigated HA for the 242-25H Evaporator with Leak Sites (Ref. 3)

HA Event Number	Description **Onsite 1 Frequency/ Consequence/Bin#	*Funct. Class.	Control	Safety Significant Functions
EOWL-2-003	Flammable gas builds up in the evaporator cell and ignites resulting in an explosion and breach of the evaporator vessel resulting in a release of radiological/hazardous material. A / H / A1 (unmitigated) Prevented (mitigated)	SS	242-25H Evaporator Cell Active Ventilation System	Prevents accumulation of flammable gases in the evaporator cell bulk vapor space
		SS	242-25H Evaporator Cell Sump Conductivity Probe/Alarm	1) Provide verification of level in the evaporator cell structure (evaporator cell sump level) to ensure that hydrogen concentration in the Evaporator Cell is within the assumption of the analysis 2) Alert operators to the primary containment release and allow for actions to minimize flammable vapor accumulation
		SS	242-25H Evaporator Cell Salt Evaluation Program	Controls shall be established to ensure that the total accumulated salt in the 242-25H Evaporator Cell is less than or equal to 1,000 gallons.
		SS	242-25H Evaporator Cell	Provide some accident mitigation through passive confinement
		SS	Emergency Response Program	Minimizes the potential release/personnel exposure
EOWL-7-001	Seismic induced damage to evaporator building and systems causes evaporator vessel failure and loss of ventilation with subsequent accumulation of flammable gas in evaporator cell resulting in an explosion and release of radiological/ hazardous material during operation. U / H / A1 (unmitigated) Prevented (mitigated)	SS	242-25H Evaporator Cell Sump Conductivity Probe/Alarm	Provide verification of level in the evaporator cell structure (evaporator cell sump level) to ensure that hydrogen concentration in the Evaporator Cell is within the assumption of the analysis
		SS	242-25H Evaporator Cell Salt Evaluation Program	Controls shall be established to ensure that the total accumulated salt in the 242-25H Evaporator Cell is less than or equal to 1,000 gallons.
		SS	Event Response Program	1) Shut down evaporator (secure steam to tube bundle and lance) and secure evaporator feed pump 2) Restore 242-25H Primary Ventilation System (PVS) or install/operate portable ventilation system on 242-25H Evaporator Cell, based on time to Lower Flammability Limit (LFL)
		SS	242-25H Evaporator Cell	Provide some accident mitigation through passive confinement
		SS	Emergency Response Program	Minimizes the potential release/personnel exposure
EOWL-7-002	Tornado/high winds induced damage to evaporator building and systems causes evaporator vessel failure and loss of ventilation with subsequent accumulation of flammable gas in evaporator cell resulting in an explosion and release of radiological/ hazardous material during operation. A / H / A1 (unmitigated) Prevented (mitigated)	SC	242-25H Evaporator Cell	Prevents the release of radioactive material from the evaporator pot and associated equipment that result in an LFL condition and subsequent explosion
		SS	Emergency Response Program	Minimizes the potential release/personnel exposure
		SS	Severe Weather Response Program	Requires evaporator to be shutdown (secure steam to tube bundle and lance) and evaporator feed pump to be secured upon receipt of a tornado watch/tornado warning/high wind warning

HA Event Number	Description **Onsite 1 Frequency/ Consequence/Bin#	*Funct. Class.	Control	Safety Significant Functions
EOWL-7-003	Wildland Fire induced damage to evaporator building and systems causes evaporator vessel failure and loss of ventilation with subsequent accumulation of flammable gas in evaporator cell resulting in an explosion and release of radiological/ hazardous material during operation. A / H / A1 (unmitigated) Prevented (mitigated)	SC	242-25H Evaporator Cell	Prevents the release of radioactive material from the evaporator pot and associated equipment that result in an LFL condition and subsequent explosion
		SS	Emergency Response Program	Minimizes the potential release/personnel exposure
		SS	Event Response Program	Requires evaporator to be shutdown (secure steam to tube bundle and lance) and evaporator feed pump to be secured following a wildland fire event

* Functional Classification

SS SSCs may be required to be SC for other functions/events. SSCs are denoted as SC or SS according to the highest classification of the function they perform for the specific event. Although Administrative Programs are not functionally classified, they are denoted as SC or SS according to the highest classification of the function they perform for the specific event. SC/SS is only denoted when classification varies depending upon process area.

** Onsite 1 Frequency/Consequence/Bin#

Frequency Acronym (see CSTF DSA Table 3.3-2)		Consequence Acronym (see CSTF DSA Table 3.3-3)	
A -	Anticipated	H -	High
U -	Unlikely	M -	Moderate
EU -	Extremely Unlikely	L -	Low
BEU -	Beyond Extremely Unlikely	Neg -	Negligible

For Risk Regions A1, A2, A3, B1, B, and C Acronyms, see CSTF DSA Tables 3.3-20 and 3.3-21.

3.0 Hazards and Accident Analyses Assessment

3.1 Hazards and Accident Analyses Review

Chapter 3 of the CSTF DSA (Hazards and Accident Analyses) identifies and assesses potential hazards associated with the operation of the CSTF. DSA Addendum Table 3.1-1 contains an assessment of the impact (associated with technical issues described in DSA Addendum Section 1.0) that operation of the 242-25H Evaporator has on the CSTF DSA Hazards and Accident Analyses. DSA Addendum Sections 3.2 through 3.17 contain supplemental information addressing how the Hazards and Accident Analyses are impacted by 242-25H Evaporator operation.

Table 3.1-1: Assessment of Hazards and Accident Analyses Impact

CSTF DSA Section Impacted	Topic	Impact of Leak Sites and the Hydrogen Generation Rate PISA on 242-25H Evaporator Operation Within the DSA
3.1.1	Hazards Analysis	Information within the DSA is supplemented. A CHA (Ref. 3) was issued covering operation of the 242-25H Evaporator with leak sites. The CHA is discussed in DSA Addendum Section 2.
3.1.2	Accident Analysis (Consequences from Chemical Releases)	No change to the DSA is required. The change in the 242-25H Evaporator Bottoms waste stream (see CSTF DSA Section 3.4.1.5.1.1) was evaluated to show the consequences from a chemical release, when coincident with a radiological release, are covered (Ref. 5).
3.3.1.1	Division of the Facility	No change to the DSA is required.
3.4.1.1.2.1	Explosive Stress (Flammable Vapor Concentration Determination)	Information within the DSA is supplemented. The methodology used for flammable vapor concentration determinations must account for a thermolytic contribution. Supplemental information used to account for the thermolytic contribution for 242-25H Evaporator Design Basis Accidents (DBAs) is covered in DSA Addendum Section 3.2.
3.4.1.3.1	Radiological Consequence Analysis (Dispersion Model protocol)	Information within the DSA is supplemented. For individual DBAs, the dispersion model protocol for determining Offsite and Onsite radiological consequences is unchanged from the current commitment in the DSA (i.e., new consequence calculations for 242-25H are performed using the new dispersion model protocols). For NPH DBAs, the Dispersion Model protocol for determining Offsite radiological consequences for new/revised calculations associated with 242-25H will be revised for the roll-up consequence determination (the Dispersion Model protocol for determining NPH DBA Onsite radiological consequences will be unchanged). A full assessment is covered in DSA Addendum Section 3.18.
3.4.1.5.1.1 Table 3.4-8	Material at Risk (Inhalation Dose Potential)	Information within the DSA is supplemented. The 242-25H Evaporator Bottoms waste stream was updated along with the associated unit TED values (rem/gal) for use in the revised 242-25H Evaporator Explosion DBAs. A full assessment is covered in DSA Addendum Section 3.3.
3.4.1.5.2.7	Evaporator Configuration and Design Inputs (242-25H Evaporator)	Information within the DSA is superseded. Supplemental information concerning the 242-25H Evaporator leak sites will also be added. A full assessment is covered in DSA Addendum Section 3.4.

CSTF DSA Section Impacted	Topic	Impact of Leak Sites and the Hydrogen Generation Rate PISA on 242-25H Evaporator Operation Within the DSA
3.4.1.5.3.5	Hydrogen Retention and Release (Hydrogen Release from Saltcake in 242-25H Evaporator Cell)	Information within the DSA is supplemented. Hydrogen release from saltcake of the type that could form during operation of the 242-25H Evaporator with leak sites is not explicitly addressed in the DSA. A full assessment is covered in DSA Addendum Section 3.5.
3.4.1.5.3.6	Trapped Gas Release (Hydrogen Release from Saltcake in 242-25H Evaporator Cell)	Information within the DSA is supplemented. Hydrogen release from saltcake of the type that could form during operation of the 242-25H Evaporator with leak sites is not explicitly addressed in the DSA. A full assessment is covered in DSA Addendum Section 3.5.
3.4.1.5.4.5	Secondary Containments (Hydrogen Release from Saltcake in 242-25H Evaporator Cell)	Information within the DSA is supplemented. Hydrogen release from saltcake of the type that could form during operation of the 242-25H Evaporator with leak sites is not explicitly addressed in the DSA. A full assessment is covered in DSA Addendum Section 3.5.
3.4.1.5.5.2 Table 3.4-4	Residual Waste Quantities in CSTF Secondary Containments	Information within the DSA is supplemented. A residual waste volume and equilibrium hydrogen concentration were not required previously and are not specified for the 242-25H Evaporator Cell. A full assessment is covered in DSA Addendum Section 3.6.
3.4.1.5.5.4	Hydrogen Generation Rates – Transfers/Evaporators/ General	Information within the DSA is supplemented. The 242-25H Evaporator Bottoms hydrogen generation rate was updated to account for a thermolytic contribution for use in the revised 242-25H Evaporator Explosion DBAs. A full assessment is covered in DSA Addendum Section 3.7.
3.4.1.5.6	Summary of General Controls	Information within the DSA is supplemented. New general controls are being added. A full assessment is covered in DSA Addendum Section 3.8.
3.4.2.1	Evaporator Pot Explosion	Information within the DSA is superseded. A new 242-25H Evaporator Pot Explosion DBA is required to reflect a new 242-25H Evaporator accident progression. The 242-25H Evaporator DBA in the DSA Addendum supersedes the DBA elements associated with 242-25H Evaporator within the CSTF DSA. A full assessment is covered in DSA Addendum Section 3.9.
3.4.2.2	Evaporator Cell Explosion	Information within the DSA is superseded. A new 242-25H Evaporator Cell Explosion DBA is required to reflect a new 242-25H Evaporator accident progression. The 242-25H Evaporator DBA in the DSA Addendum supersedes the DBA elements associated with 242-25H Evaporator within the CSTF DSA. A full assessment is covered in DSA Addendum Section 3.10.

CSTF DSA Section Impacted	Topic	Impact of Leak Sites and the Hydrogen Generation Rate PISA on 242-25H Evaporator Operation Within the DSA
3.4.2.3	Evaporator Overflow, Leaks, and Spills	Information within the DSA is superseded. The 242-25H Evaporator Overflow, Leaks, and Spills DBA was revised to reflect new 242-25H Evaporator Bottoms inhalation dose potential and TEDs. The 242-25H Evaporator DBA in the DSA Addendum supersedes the DBA elements associated with 242-25H Evaporator within the CSTF DSA. A full assessment is covered in DSA Addendum Section 3.11.
3.4.2.4	Evaporator Overpressure	No change to the DSA is required. An overpressurization breach in the evaporator pot is considered possible if the internal pressure in the evaporator pot exceeds the design pressure. Operation with leak sites does not change the overpressurization breach possibility. As documented in the CHA (Ref. 3), operation of the evaporator with leak sites does not impact the Evaporator Overpressure DBA.
3.4.2.5	Transfer Facility Fire	No change to the DSA is required. Operation with leak sites does not significantly impact the initial conditions assumed for a fire in the 242-25H Evaporator Cell. As documented in the CHA (Ref. 3), operation of the evaporator with leak sites does not impact the Transfer Facility Fire DBA.
3.4.2.17	Tornado and High Winds Event	Information within the DSA is superseded. The CSTF Tornado and High Winds Event is updated to reflect that the Offsite and Onsite consequences of a 242-25H Evaporator Pot Explosion are included in the consolidated Tornado/High Winds consequence analyses. A full assessment is covered in DSA Addendum Section 3.12.
3.4.2.18	Seismic Event	Information within the DSA is superseded. The CSTF Seismic Event is updated to reflect revised consequences for one of the individual evaporator DBAs included in the overall Seismic consequences roll-up. A full assessment is covered in DSA Addendum Section 3.13.
3.4.2.19	Wildland Fire	Information within the DSA is supplemented. Operation with leak sites does not significantly impact the initial conditions assumed for a Wildland Fire. The safety related controls remain the same, but the first and second levels of control are swapped, with Evaporator Cell now being the first level of control and Event Response Program now the second level of control. A full assessment is covered in DSA Addendum Section 3.14.
3.4.2.20	Loss of Offsite Power	No change to the DSA is required. As documented in U-CHA-H-00011 (Ref. 3), operation of the evaporator with leak sites does not impact the Loss of Offsite Power DBA. A full assessment is covered in DSA Addendum Section 3.15.
3.4.2.21	Chemical Release	No change to the DSA is required. Operation with leak sites does not significantly impact the initial conditions assumed for a Chemical Release. As documented in the CHA (Ref. 3), operation of the evaporator with leak sites does not impact the Chemical Release DBA.
3.4.3.2	Secondary Containment Explosion Beyond Design Basis Accident (BDBA)	No change to the DSA is required. The worst-case evaporator cell explosion consequences discussed in CSTF DSA Section 3.4.3.2 are based on a BDBA involving cell explosion during transfer through 242-16H Evaporator Cell and are not impacted by 242-25H Evaporator operation.

CSTF DSA Section Impacted	Topic	Impact of Leak Sites and the Hydrogen Generation Rate PISA on 242-25H Evaporator Operation Within the DSA
3.4.3.3	Evaporator Vessel Overpressurization BDBA	No change to the DSA is required. The worst-case evaporator overpressurization consequences discussed in CSTF DSA Section 3.4.3.3 are based on a BDBA involving an evaporator overpressurization from a double ended guillotine break of the tube bundle. This BDBA is not impacted by 242-25H Evaporator operation with leak sites.
Table 3.3-10	CSTF Hazard Category	No change to the DSA is required.
Tables 3.3-11, 3.3-12, 3.3-13	HA Events Not Requiring Controls Due to Configuration/Low Risk, HA Events Not Requiring Controls Due to Further Analysis, Evaporator Mitigated HA and SS Controls (Evaporator HA Events)	No change to the DSA is required. Operation with leak sites affects the Evaporator Mitigated HA events. The Evaporator Mitigated HA events and controls associated with operation with leak sites are documented in the CHA (Ref. 3). The CHA team reviewed existing hazard analyses that have evaluated the 242-25H Evaporator in the CSTF. DSA Addendum Table 2.3-1 documents the existing hazard analyses review providing justification of what did or did not need further evaluation. This review included events not requiring controls in the CSTF DSA due to configuration/low risk. The SS SSCs and credited ACs specific to HA events from the CHA (Ref. 3) are identified and presented in DSA Addendum Table 2.3-4.
Table 3.3-16	Planned Equipment Upgrades	No change to the DSA is required. Since the DSA Addendum is only intended to reflect a short-term operating condition (as discussed in DSA Addendum Section 1.0), no planned equipment upgrades will be incorporated into CSTF DSA Table 3.3-16.
Table 3.3-17	Evaporator HA Events to be Analyzed as Design Basis Accidents	No change to the DSA is required. Operation with leak sites affects the Evaporator Mitigated HA events. The Evaporator Mitigated HA events and controls associated with operation with leak sites are documented in the CHA (Ref. 3). A list of the affected events (covered in the CHA) and the associated dispositions is provided in DSA Addendum Table 2.3-3.
Table 3.3-22	CSTF Defense-in-Depth / Important-to-Safety Hazard Controls	No change to the DSA is required. The 242-25H Evaporator System Defense-in-Depth / Important-to-Safety (DID/ITS) Controls listed in the CHA (Ref. 3) are already included in CSTF DSA Table 3.3-22 with the same safety functions listed for the 242-25H Evaporator. The 242-25H Evaporator Cell Sump Conductivity Probe/Alarm is no longer required to be listed in CSTF DSA Table 3.3-22 as a DID/ITS Control because it is classified SS.
Table 3.4-4	Evaporator System Data	Information within the DSA is superseded. Some of the 242-25H Evaporator System inputs were revised for use in the revised 242-25H Evaporator Explosion DBAs. A full assessment is covered in DSA Addendum Section 3.16.
Table 3.4-5	Rated Pressures for Evaporator Vessel Components	Information within the DSA is supplemented. Operation with leak sites impacts the potential pot failure mechanisms. The 242-25H Evaporator Pot Explosion DBA has been revised to assume worst case potential pot failure mechanisms without relying upon vessel pressure ratings. The 242-25H Evaporator Pot rated pressures are not relied upon in analyses assuming the presence of leak sites.

CSTF DSA Section Impacted	Topic	Impact of Leak Sites and the Hydrogen Generation Rate PISA on 242-25H Evaporator Operation Within the DSA
Table 3.4-7	Airborne Radiological (rem) and Chemical (mg/m^3) Consequences for the Design Basis Accidents	Information within the DSA is superseded. Some of the Airborne Radiological and Chemical Consequences were updated to reflect the revised 242-25H Evaporator DBAs. A full assessment is covered in DSA Addendum Section 3.17.

3.2 Flammable Vapor Concentration Determination

The methodology used to determine flammable vapor concentrations in the DBAs associated with 242-25H Evaporator has been updated. Hydrogen and other flammable gases (e.g., ammonia, volatile organics) that accumulates in the 242-25H Evaporator/Evaporator Cell vapor spaces could be produced by one or more of the following postulated mechanisms (Ref. 6):

1. Hydrogen gas generated due to radiolysis of water,
2. Hydrogen gas generated due to thermolysis,
3. Hydrogen gas generated due to electrochemical processes (e.g., corrosion),
4. Flammable gases (other than ammonia) generated due to radiolysis of organics,
5. Flammable gases (other than hydrogen gas and ammonia) generated due to thermolysis of organics,
6. Hydrogen gas generated due to biological mechanism (bacteria and algae decays),
7. Hydrogen gas generated due to photolysis of organics,
8. Nitrogen oxides generated due to radiolysis of nitrate and nitrite in an acidic environment,
9. Ammonia and trace organics generated from processing or due to receipts of outside facilities, and
10. Catalytic generation of hydrogen gas.

The quantity of hydrogen or other flammable gases generated by electrochemical processes, radiolysis of organics, thermolysis of organics with degradation products other than hydrogen gas, bacteria and algae decays, photolysis of organics, and catalysis are identified as not significant and therefore are bounded by hydrogen generated by radiolysis of water. The minimum nitrite concentration in waste tank supernate is maintained greater than or equal to 0.0275 molar (M) (this value accounts for analytical uncertainty) to effectively eliminate the corrosion (excluding chemical cleaning corrosion-induced HGR), radiolysis of organics and catalyst mechanism as flammability concerns. The total hydrogen generation rate is therefore the sum of the contribution from radiolytic hydrogen generation, thermolytic hydrogen generation, and corrosion induced hydrogen generation (Ref. 6). Flammable gases other than hydrogen (e.g., organics) used in analysis of flammability for liquid waste are discussed in CSTF DSA Section 3.4.1.5.3.8.

A methodology used to calculate the contribution associated with thermolytic hydrogen generation has been documented (Ref. 6). Research was conducted on simulated and actual tank waste to document thermolytic hydrogen generation rates at different temperatures. The hydrogen generation rate testing used actual Tank 38 waste and a high boiling point simulant. The thermolytic testing results (documented in Reference 6) indicate that there is a hydrogen generation rate component that may be temperature correlated with the thermolysis of organics. A universal formula for thermolytic contribution to total hydrogen generation rate has not been developed and an independent thermolytic contribution is not calculated and quantified. Instead, the thermolytic contribution to total hydrogen generation rate is qualitatively assessed on a case by case basis when bounding streams are defined or when program attributes are developed.

For bounding waste streams with defined hydrogen generation rate inputs (such as the 242-25H Evaporator Bottoms hydrogen generation rate), thermolysis is explicitly accounted for within the hydrogen generation rate associated with the stream. The thermolytic testing results are considered during the bounding waste stream hydrogen generation rate development. The hydrogen generation rates associated with the non-bounding waste streams account for thermolysis as needed, based on the conditions impacting the stream (e.g., applicable temperature limitations). The thermolytic contribution may be zero or may be qualitatively factored into the hydrogen generation rate associated with the non-bounding waste streams. Additional compensatory measures (e.g., faster response times) are used, as needed, to account for the impact thermolytic contribution has on the total hydrogen generation rate.

3.3 242-25H Evaporator Bottoms Inhalation Dose Potential and Total Effective Dose

242-25H Evaporator Bottoms is defined in the CSTF DSA as a waste stream with an inhalation dose potential of up to 3.7E+07 rem/gal. The 242-25H Evaporator Bottoms waste stream was updated to have an inhalation dose potential of up to 1.85E+07 rem/gal (Ref. 6). The 242-25H Evaporator Bottoms stream has the characteristic radiological constituent concentrations stated in DSA Addendum Table 3.3-1 (Ref. 6). The information in DSA Addendum Table 3.3-1 supplements the information reflected in CSTF DSA Table 3.4-8 (Radiological Constituent Concentrations in CST Waste Streams). The associated unit TED values (rem/gal) for 242-25H Evaporator Bottoms was also updated accordingly (Ref. 7).

Table 3.3-1: Updated Radiological Constituent Concentrations for 242-25H Evaporator Bottoms

	Radiological Constituent Concentrations of 242-25H Evaporator Bottoms (Ref. 6)
Isotope	**(Ci/gal)**
Sr-90	1.2E+00
Y-90	1.2E+00
Cs-137	4.0E+01
Ba-137m	3.8E+01
Pu-238	6.2E-02
Pu-239	3.0E-03

Pu-240	8.2E-04
Pu-241	4.7E-02
Am-241	2.1E-02
Cm-244	2.3E-02

3.4 242-25H Evaporator Configuration and Design Inputs

The 242-25H Evaporator Configuration and Design Inputs have been revised to reflect operation of the 242-25H Evaporator with leak sites. The 242-25H Evaporator will be operated with leak sites that leak less than or equal to three gallons per day with a total volume of accumulated salt in the evaporator cell of less than or equal to 1,000 gallons (Ref. 6). These values protect flammability initial condition assumptions of the accident analyses.

The maximum undetected waste volumes in the 242-25H Evaporator Cell stated in the CSTF DSA and used in the 242-25H Evaporator DBAs updated within this DSA Addendum are being superseded by new values. The maximum undetected waste volumes in the 242-25H Evaporator Cell following a non-seismic leak is 33,685 gallons for a slow leak and 8,550 gallons for a fast leak (Ref. 6). The 242-25H Evaporator Cell maximum waste volume following a seismic event is 15,600 gallons (Ref. 6).

The CHA that was performed covering operation of the 242-25H Evaporator with leak sites contained assumptions regarding 242-25H Evaporator initial conditions during saltcake cleaning (Ref. 3). Prior to 242-25H Evaporator Cell saltcake cleaning, at least one of the evaporator cell covers shall be removed (a single cell cover is large enough in area that vapor space communication between the cell and outside atmosphere would prevent significant flammable vapor accumulation).

The hydrogen generation rate methodology developed in Reference 6 discusses that additions of antifoam to the evaporators is no longer performed during Tank Farm operations. Based on this, antifoam additions to the 242-25H Evaporator are prohibited.

3.5 Hydrogen Release from Saltcake Leaked During 242-25H Evaporator Operation

As discussed in the DSA, hydrogen bubbles can become trapped in saltcake and released. Trapped hydrogen could potentially be retained/released in the saltcake that could form during operation of the 242-25H Evaporator with leak sites. The 242-25H Evaporator leak saltcake retains hydrogen based on 1) the total volume of saltcake present, 2) the size of the voids within the saltcake, and 3) the percent hydrogen for the gas trapped in the void spaces. The 242-25H Evaporator Cell saltcake has a maximum hydrogen volume of 11% of the total salt volume (Ref. 6).

3.6 242-25H Evaporator Residual Waste Volume and Equilibrium Hydrogen Concentration

It is recognized that a small quantity of waste could be present in the 242-25H Evaporator Cell at the onset of a DBA event. This “residual” quantity of waste is the assumed waste volume used as an initial condition in the DBA progressions. The residual waste volume for the 242-25H Evaporator Cell is 118 gallons of liquid in the evaporator cell sump and 1,000 gallons of saltcake in the evaporator cell. This total amount of waste (assumed to

have the 242-25H Evaporator Bottoms hydrogen generation rate) would result in an equilibrium hydrogen concentration of less than or equal to 25% of the LFL considering only the effects of atmospheric breathing (Ref. 8). The 118 gallons of liquid in the evaporator cell sump is based on the available volume of the sump structure (including the cell gutter volume).

3.7 242-25H Evaporator Hydrogen Generation Rates

The bounding radiolytic hydrogen generation rate for 242-25H Evaporator Bottoms in the DSA is 9.6E-06 ft^3/gal-hr. To account for the impact thermolytic contribution has on hydrogen generation, the bounding hydrogen generation rate for 242-25H Evaporator Bottoms was updated to 1.5E-05 ft^3/gal-hr (at 25°C) for temperatures less than or equal to 100°C and 1.0E-03 ft^3/gal-hr at temperatures greater than 100°C (Ref. 6).

3.8 242-25H Evaporator General Controls

CSTF DSA Section 3.4.1.5.6 contains controls which are required to protect general assumptions upon which the Accident Analyses calculations are based or which apply to numerous DBAs. The 242-25H Evaporator DBAs and associated Accident Analyses have been revised to reflect operation of the 242-25H Evaporator with leak sites.

The Evaporator Feed Qualification Program will address the following requirement: Prior to providing waste feed to the 242-25H Evaporator, ensure that the supernate nitrite concentration in the feed tank is greater than or equal to 0.0275 M. This minimum nitrite concentration (which accounts for analytical uncertainty) will effectively eliminate the corrosion, radiolysis of organics, and catalyst mechanisms as flammability concerns, as discussed in DSA Addendum Section 3.2.

A 242-25H Evaporator Cell Salt Evaluation Program will require that the 242-25H Evaporator Cell is inspected at least once every 90 days of evaporator operation for the presence of salt. If inspection results indicate a total volume of accumulated salt greater than 1,000 gallons, then the evaporator shall be shut down immediately (secure feed pump and secure steam to tube bundle and lance) and not restarted until the salt volume is reduced below limits. The Salt Evaluation Program requirements will ensure that the total accumulated salt in the 242-25H Evaporator Cell is less than or equal to 1,000 gallons, as discussed in DSA Addendum Section 3.4.

3.9 242-25H Evaporator Pot Explosion

3.9.1 Scenario Development

3.9.1.1 Background

The purpose of the 242-25H Evaporator in the CSTF is to concentrate high level radioactive waste by evaporation. Waste in the evaporator pot generates hydrogen as a result of the radiolytic decomposition of water and thermolytic decomposition of organics. In addition, dissolved (soluble) hydrogen and organics may be released from the waste. Because the evaporator pot has an air atmosphere, quantities of oxygen sufficient to allow an explosion were assumed available. For the purpose of this scenario, no ignition source controls were credited and it is assumed that an ignition source is present.

During evaporator operation, the steam generated by boiling of the waste is adequate to remove any hydrogen or other flammables generated. When the evaporator is not in operation and waste is left in the evaporator pot, air flow through level measurement devices (dip tubes) may remove flammable vapors that are generated, with the effectiveness of the purge dependent upon the flammables generation rate of the waste remaining in the pot. If flammable vapors are allowed to accumulate in the pot and the LFL is exceeded, an explosion (deflagration or detonation) could occur.

For an explosion to occur in the evaporator, the concentration of hydrogen mixed with air in the vapor space must be at or above the LFL. In order for the hydrogen concentration to reach these levels, the waste must be left in the evaporator and flammable vapor generation must overwhelm air and steam purging, otherwise the hydrogen gas will be swept out of the vessel.

For further detail on the 242-25H Evaporator description and operation, refer to CSTF DSA Section 2.4.3.

3.9.1.2 Accident Initiators

The CHA (Ref. 3) identified the following event associated with an Evaporator Pot Explosion: EOWL-2-001. The CHA determined that further analysis was not required, however, the updated hydrogen generation rate for 242-25H Evaporator Bottoms (discussed in DSA Addendum Section 3.7) can impact the Evaporator Pot Explosion DBA.

3.9.1.3 Unmitigated Accident Progression

Two accident progressions are analyzed, evaporator startup and evaporator shutdown. For evaporator startup and shutdown progressions, no mitigating actions are assumed for 10 days. Therefore, the evaporator startup and shutdown scenarios below are analyzed at 10 days, just before steam/air is restored. The conditions and parameters defining these scenarios are described in the following.

3.9.1.3.1 Startup Scenarios

Two 242-25H Evaporator startup cases are defined. These are:

1) Startup with rapid heating of a maximum fill volume to 100°C. All dissolved hydrogen/organics rapidly released, and
2) Startup with rapid heating of a partial fill volume to 100°C. All dissolved hydrogen/organics rapidly released.

The general startup accident progression applicable to both cases is as follows:

- The evaporator is being started up,
- The evaporator pot leak sites are assumed to have a total leak rate of 3 gallons per day,
- Air to the level measuring dip tubes and steam to the lance are in operation,

- The vapor space is initially filled with air at 0% LFL, due to the purging airflow from the dip tubes and eventually by the additional uncondensed steam flow from the lance as the waste liquid heats,
- Waste liquid at 20°C is pumped into the vessel,
- The waste liquid is rapidly heated to 100°C, and all dissolved hydrogen is released to the vapor space,
- At some fill level from zero up to maximum, steam supply to the tube bundle is lost,
- Concurrently, air to the dip tubes and steam/air to the lance is also lost,
- Feed flow is immediately terminated,
- The soluble hydrogen and organics released from the feed provide an initial background concentration in the vapor space,
- The demister is assumed to be plugged,
- Hydrogen begins to fill the vapor space due to continued radiolytic and thermolytic hydrogen generation from waste,
- Ignition source is present (no ignition source controls are credited),
- An explosion occurs, if the flammable vapors have reached explosive levels,
- The explosion causes material to become airborne,
- The overpressure from the explosion causes the pot to fail, ejects any installed HEPA filters, and/or creates other openings (vent paths) in the evaporator cell,
- The air expansion from the heat of the explosion causes air to be expelled from the cell. This expelled air carries with it the previously described material made airborne by the explosion,
- The airborne material (from the evaporator pot) that has escaped from the cell during the explosion is transported to Onsite and Offsite receptors,
- Evaporator cell retains any liquid waste that spills from failed evaporator pot (the evaporator cell will relieve pressure following an explosion via cell cover lifting, preventing the cell from failing).

3.9.1.3.2 Shutdown Scenarios

Three 242-25H Evaporator shutdown cases are defined. These are:

1) Shutdown with no temperature decrease and a maximum waste liquid fill at 186°C. All of the dissolved hydrogen contained in the fill needed to raise the evaporator operating level from minimum to maximum is instantaneously released.
2) Shutdown with no temperature decrease and a minimum waste liquid fill at 186°C. No dissolved hydrogen is involved.

3) Shutdown with a temperature decrease to 100°C and a maximum waste liquid fill. All of the dissolved hydrogen contained in the fill needed to raise the evaporator operating level from minimum to maximum is released and retained until 100°C is reached.

The general shutdown accident progression applicable to all three cases is as follows:

- The evaporator is operating at 186°C, at minimum operating liquid level,
- The evaporator pot leak sites are assumed to have a total leak rate of 3 gallons per day,
- Air to the level dip tubes and steam/air to the lance are in operation,
- The vapor space is at 0% LFL, due to the steam flow from the boiling liquid,
- All soluble hydrogen and organics released from the waste liquid are being swept from the vapor space,
- At 186°C steam supply to the tube bundle is lost,
- Concurrently, steam/air to the lance and air to the dip tubes are also lost,
- In the minimum fill case, feed flow is terminated immediately. In the maximum fill cases, feed flow is not terminated until maximum operating level is reached,
- The soluble hydrogen and organics in the additional feed flow provide an initial background concentration of flammables in the vapor space,
- The demister is assumed to be plugged,
- Hydrogen begins to fill the vapor space due to continued radiolytic and thermolytic hydrogen generation from waste,
- Ignition source is present (no ignition source controls are credited),
- An explosion occurs, if the flammable vapors have reached explosive levels,
- The explosion causes material to become airborne,
- The overpressure from the explosion causes the pot to fail, ejects any installed HEPA filters, and/or creates other openings (vent paths) in the evaporator cell,
- The air expansion from the heat of the explosion causes air to be expelled from the cell. This expelled air carries with it the previously described material made airborne by the explosion,
- The airborne material (from the evaporator pot) that has escaped from the cell during the explosion is transported to Onsite and Offsite receptors,
- Evaporator cell retains any liquid waste that spills from failed evaporator pot (the evaporator cell will relieve pressure following an explosion via cell cover lifting, preventing the cell from failing).

3.9.1.4 Mitigated Accident Progression

The various 242-25H Evaporator Pot Explosion accident scenarios were analyzed in Reference 9. The various evaporator pot explosion scenarios reach different hydrogen concentrations at the end of the 10-day event duration and therefore have different results. The "Startup with rapid heating of a partial fill volume to 100°C" scenario does not result in an evaporator pot explosion at the end of the 10-day event duration for the 242-25H Evaporator. The "Shutdown with a temperature decrease to 100°C and a maximum waste liquid fill" and the "Startup with rapid heating of a maximum fill volume to 100°C" scenarios do not result in a 242-25H Evaporator Pot detonation at the end of the 10-day event duration, but do reach deflagration conditions in less than 10 days. The "Shutdown with no temperature decrease and a maximum waste liquid fill at 186°C" and the "Shutdown with no temperature decrease and a minimum waste liquid fill at 186°C" scenarios can result in a 242-25H Evaporator Pot detonation at the end of the 10-day event duration.

The unmitigated consequences of the 242-25H Evaporator Pot Explosion do not challenge the Offsite or exceed the Onsite EGs (as documented in DSA Addendum Section 3.9.4). Because the unmitigated accident scenarios do not challenge the Offsite or exceed the Onsite EGs, no mitigated analysis is required.

3.9.2 Frequency Determination

The Evaporator Pot Explosion events have been classified in the anticipated frequency bin. No detailed frequency analyses were performed to lower the assumed frequency. Though not credited, normal operating procedures and the low probability of an ignition source being present with the vapor space above 100% of the LFL significantly reduce the probability of a 242-25H Evaporator Pot Explosion.

3.9.3 Source Term Analysis

Offsite and Onsite Source Term (ST) and dose calculations are based on reasonably conservative values. Background information regarding the methodologies used to calculate STs is given in CSTF DSA Section 3.4.1.1. Specific use of these methodologies for the 242-25H Evaporator Pot Explosion accident is discussed in detail below.

3.9.3.1 Source Term Inputs and Assumptions

The inputs and assumptions used in determining the 242-25H Evaporator Pot Explosion STs are taken from Reference 9.

In addition to the general inputs and assumptions stated in the CSTF DSA and this DSA Addendum, the following inputs and assumptions were used in determining the explosion STs and are all taken from Reference 9, unless otherwise stated:

- HEPA ventilation filters have a maximum loading of 1 Curie (Ci) of Cs-137. This comes from the Cs-137 originating in the supernate feed that collects in the Evaporator Bottoms. The bounding concentration of the Cs-137 in 242-25H Evaporator Bottoms is 40 Ci/gal. The 242-25H Evaporator has a total of 15 HEPA filters.

3.9.3.2 Source Term Derivation

The unmitigated radiological ST can be expressed in terms of airborne release of activity, using the standard ST equation (ST = MAR x DR x ARF x RF x LPF) described in CSTF DSA Section 3.4.1.1.1. The terms in the five factor ST formula are discussed below or are intrinsic to the explosion (detonation or deflagration) model.

3.9.3.2.1 Material at Risk

The MAR waste stream for the 242-25H Evaporator Pot Explosion accident is 242-25H Evaporator Bottoms (this includes material in the pot and material deposited on the evaporator cell HEPA filters). The waste characteristics and inhalation dose potential on a per unit volume basis for this stream is given in DSA Addendum Section 3.3.

The volume of MAR for the explosion ST is the waste liquid contents of the evaporator pot. The volume of MAR for the HEPA filter ST is as discussed previously in the ST inputs and assumptions.

3.9.3.2.2 Damage Ratio

The DR is assumed to be one.

3.9.3.2.3 Airborne Release Fraction

For detonations, the amount of waste that is aerosolized equals the equivalent Trinitrotoluene (TNT) mass (ARF = 1.0). This assumption is inherent in the TNT equivalent model used for detonations.

ARFs for the release mechanisms associated with the deflagration/detonations are as follows (Ref. 9).

- The Rapid Boiling ARF (modeled as Superheated Liquid) is 1.0E-01.
- The Blowdown Entrainment (≤ 50 pounds per square inch gauge [psig]) ARF is 5.0E-05.
- The Spray ARF (failure point under liquid surface level) is 1.0E-04.
- The Free Fall Spill (≤ 3-meter fall distance, concentrated heavy metal solution) ARF is 2.0E-05.
- The Blast Effects HEPA filter failure ARF is 1.0E-02.
- The Free-fall Impact (Enclosed) HEPA filter failure ARF is 5.0E-04.
- The Aerodynamic Entrainment (indoor, normal ventilation) ARR is 4.0E-07/hour.

3.9.3.2.4 Respirable Fraction

RF is the fraction of the airborne material that escapes to the atmosphere outside evaporator cell that is of respirable size. It depends on the local release mechanism, and whether any additional filtering/wall condensation is available.

Since the HEPA filters are assumed to fail and wall effects are conservatively neglected, a bounding unfiltered release is used for the HEPA filter release (RF = 1.0 for both Blast Effects and Impact Effects).

The RF values for the other release mechanisms are as follows (Ref. 9).

- The Rapid Boiling RF (modeled as Superheated Liquid) is 1.0.
- The Blowdown Entrainment (≤ 50 psig) RF is 0.8.
- The Spray RF (failure point under liquid surface level) is 1.0.
- The Free Fall Spill RF (3-meter fall distance, concentrated heavy metal solution) is 1.0.
- The Aerodynamic Entrainment RF (indoor, normal ventilation) is 1.0.

3.9.3.2.5 Leak Path Factor

The LPF is assumed to be one for all scenarios.

3.9.3.3 Flammable Vapor Concentration Models

The flammable vapor concentration used in the ST calculations is determined by calculating the hydrogen concentration and correcting for any organics present. The hydrogen concentration and percent LFL at the time of the explosion is determined in the analysis (Ref. 9) using the flammable vapor concentration formulas described in CSTF DSA Section 3.4.1.1.2 and in DSA Addendum Section 3.2.

3.9.3.4 Explosion Effects on Evaporator Vessel Integrity

If the pressure from an explosion exceeds the failure pressure of the vessel, material will be released from the vessel. The discovery of leaks within the pot is evidence that the integrity of the evaporator pot has been compromised; therefore, previously determined pot pressure limits cannot be relied upon. Airborne release of material is assumed to occur through the vent in the evaporator condenser to the evaporator cell secondary containment. For additional spray, spill, and long-term aerodynamic entrainment releases, the evaporator pot is assumed to fail at the leak sites. For spray STs, the leak sites are assumed to not catastrophically fail and completely aerosolize the entire pot contents which results in a conservative evaluation. For spill STs, the pot is assumed to catastrophically fail at the leak sites through the bottom of the cone, resulting in the entire contents spilling from the vessel. It is conservatively assumed that a deflagration will not catastrophically fail the vessel, and detonation will.

3.9.3.5 HEPA Filter Source Term

During normal operation, the HEPA filters in the evaporator cell provide confinement (filtering) of modest releases from the evaporator. In time, radioactive material builds up on the filter media. Since the differential pressure to fail a HEPA filter is quite low (approximately 10 inches water column), the filters are modeled as failing as the result of an analyzed explosion. Of the material resident on the filter media, about 1% is assumed to be released during the explosion, based on consideration of airborne release and RFs associated with blast effects and impact stresses from falls. For the HEPA filter MAR, a blast dislodges the filters releasing or freeing all of the MAR to the environment outside the evaporator cell (LPF = 1.0). Some of the MAR remains airborne due to the blast, while the rest falls to the ground with the filters, only to have some become airborne again upon impact. Two possible release mechanisms from a filter failure are considered

concurrently in the determination of the filter ST; namely, blast effects and free fall impact (Ref. 9).

3.9.3.6 Explosion (Deflagration/Detonation) Source Term

The ST is dependent on whether a deflagration or detonation occurs. If the hydrogen concentration is between the temperature corrected LFL and the Lower Explosive Limit (LEL), a deflagration is assumed to occur. If the hydrogen concentration is at LEL or above, a detonation is assumed to occur. If the hydrogen concentration is below the LFL, no event will occur. The explosion is modeled in the ST calculation using either the detonation model or the deflagration model (discussed further in CSTF DSA Section 3.4.1.1.2).

3.9.3.7 Detonation Source Term

The release resulting from a detonation is determined using the "TNT Equivalent Method". That is, the ST mass is taken to be equal to the mass of TNT, which would give the same total energy release as that released by the hydrogen combusted with the air in the vessel. This method sets the product of the MAR, DR, ARF, and RF factors inside the evaporator vessel equal to the energy-equivalent mass of TNT, giving the airborne respirable amount of MAR.

3.9.3.8 Deflagration Source Term

For the deflagration, there are two possible mechanisms that could generate an airborne source factor, rapid boiling or liquid entrainment from high velocity gas flowing over the waste liquid surface of the evaporator. These terms were evaluated independently with the most conservative result used to determine the consequences.

3.9.3.9 Spray Source Term

If the pressure resulting from the explosion is only great enough to partially fail (e.g., crack) the lower evaporator vessel, then a spray release may result during vessel depressurization below the liquid surface. In this case, the containment failure ARF is applied to the contents of the evaporator, which are released.

3.9.3.10 Spill Source Term

If the pressure resulting from the explosion is great enough to substantially fail the lower part of the evaporator vessel, there will be a ST resulting from the spill of material on the cell floor.

3.9.3.11 Long-Term Aerodynamic Entrainment Source Term

In addition to the spill or spray term, there may also be a long-term ST associated with aerodynamic entrainment of the material remaining on the cell floor. The aerodynamically entrained material will be exhausted from the evaporator cell through the failed HEPA filters by the ventilation system flow, which is modeled as remaining functional after an explosion within the evaporator vessel.

3.9.3.12 Rapid Boiling Source Term

It is assumed that all available explosion energy is transferred to thermal energy for boiling of the waste liquid (MAR) for complete combustion of the reactant gas mixture. This energy is deposited in all the surfaces exposed to the explosion. The amount deposited in the liquid surface vaporizes the liquid. For conservatism, all available energy is modeled to strike the liquid. The amount of vapor released containing radioactive material is combined with the RF and LPF for the rapid boiling ST.

3.9.3.13 Blowdown and Entrainment Source Term

This term describes the liquid entrainment in the evaporator during a high-pressure blowdown through a containment vent or breach. It is also extended to a high-pressure blowdown following an explosion. For conservatism, all available explosion energy is transformed into mechanical energy that strips (entrains) droplets from the liquid surface of the MAR.

3.9.3.14 Source Term Calculation

The STs for the various evaporator pot explosion scenarios were calculated in Reference 9 based on whether a deflagration or detonation occurred at the end of the 10-day event duration. The bounding consequences for the 242-25H Evaporator Pot Explosion are associated with the "Shutdown with no temperature decrease and a minimum waste liquid fill at 186°C" scenario, which results in a detonation within the 10-day event duration.

3.9.4 Consequence Analysis

3.9.4.1 242-25H Evaporator Consequence Analysis

The consequences of the bounding 242-25H Evaporator Pot Explosion event are calculated in Reference 9. The unmitigated and mitigated Offsite (≤ 0.1 rem) consequences for the bounding 242-25H Evaporator Pot Explosion scenario (detonation occurring during "Shutdown with no temperature decrease and a minimum waste liquid fill at 186°C" scenario) do not challenge the Offsite EGs.

The unmitigated and mitigated Onsite (≤ 34 rem) consequences for the bounding 242-25H Evaporator Pot Explosion scenario (detonation occurring during "Shutdown with no temperature decrease and a minimum waste liquid fill at 186°C" scenario) do not exceed the Onsite EGs. The immediate vicinity worker risk is also judged not to exceed the applicable Onsite EGs due to the presence of the evaporator cell.

The 242-25H Evaporator related controls credited in preventing the event or in reducing the consequences are described in DSA Addendum Section 3.9.5. The consequences of a 242-25H Evaporator Pot Explosion event following an NPH event are addressed cumulatively with other events in the NPH accident analyses in this DSA Addendum.

3.9.4.2 Consolidated (242-16H and 242-25H Evaporators) Consequence Analysis

The unmitigated and mitigated Offsite (≤ 0.1 rem) and Onsite (≤ 41 rem) dose consequences for the bounding Evaporator Pot Explosion event (considering both the 242-16H and 242-25H Evaporators) are not changed from those stated in CSTF DSA

Table 3.4-7. The derivation of the consolidated Evaporator Pot Explosion unmitigated and mitigated doses is shown in DSA Addendum Table 3.9-1.

Table 3.9-1: Consolidated Evaporator Pot Explosion Dose Consequences

Design Basis Accident	Dose Source	Unmitigated Offsite	Mitigated Offsite	Unmitigated Onsite	Mitigated Onsite
Evaporator Pot Explosion (considering 242-16H or 242-25H Evaporator analyses in CSTF DSA)	CSTF DSA 3.4.2.1	≤ 0.1	≤ 0.1	≤ 41	≤ 41
242-25H Evaporator Pot Explosion	DSA Addendum 3.9.4.1	≤ 0.1	≤ 0.1	≤ 34	≤ 34
DSA Addendum 3.9.4.2 Consolidated Evaporator Pot Explosion Dose (considering 242-16H or 242-25H Evaporator analyses in CSTF DSA and DSA Addendum)		≤ 0.1	≤ 0.1	≤ 41	≤ 41

3.9.5 Summary of Controls

Since the unmitigated 242-25H Evaporator Pot Explosion event consequences do not challenge the Offsite or exceed the Onsite EGs (as discussed in DSA Addendum Section 3.9.4), no controls are required beyond the prohibited operations (stated in CSTF DSA Section 3.4.1.5.2) and general controls (stated in CSTF DSA Section 3.4.1.5.6 and DSA Addendum Section 3.8) specified elsewhere.

3.10 242-25H Evaporator Cell Explosion

3.10.1 Scenario Development

3.10.1.1 Background

The purpose of the 242-25H Evaporator in the CSTF is to concentrate high level radioactive waste by evaporation. If a jumper, gasket, valve, or evaporator vessel leak occurs inside the evaporator cell, the leakage is contained within the containment structure of the evaporator cell. The leaked waste may generate hydrogen as a result of the radiolytic decomposition of water and thermolytic decomposition of organics. In addition, dissolved (soluble) hydrogen and organics may be released from the leaked waste (for further details on flammable vapor generation refer to CSTF DSA Section 3.4.1.5.3 and DSA Addendum Section 3.2).

If the flammable vapors are allowed to accumulate with the evaporator cell covers in place, an explosion (deflagration or detonation) could occur (i.e., a single cell cover is large enough in area that vapor space communication between the cell and outside atmosphere would prevent significant flammable vapor accumulation). Since the evaporator cell has an air atmosphere, quantities of oxygen sufficient to allow a deflagration were assumed available. For the purpose of this scenario, no ignition source controls were credited and it is assumed that an ignition source is present.

For further detail on the 242-25H Evaporator Cell description, refer to CSTF DSA Section 2.4.3.

3.10.1.2 Accident Initiators

The CHA (Ref. 3) identified the following events associated with an Evaporator Cell Explosion: EOWL-2-003, EOWL-7-001.

3.10.1.3 Unmitigated Accident Progression

The fast leak scenario considers a 242-25H Evaporator System leak that is large enough to be detected and terminated by the operators. The slow leak scenario considers an Evaporator System slow leak that goes undetected until it overflows into the ventilation ductwork. The general progression for fast and slow (i.e., non-seismic) leaks originating from the Evaporator System is provided below:

- The 242-25H Evaporator Cell sump is assumed to be full of waste (15.78 ft^3 [118 gallons]) at a nominal temperature of less than or equal to 100°C,
- The evaporator cell and pot surface contain a total of 1,000 gallons of salt from evaporator pot leak sites. The salt is at a nominal temperature of less than or equal to 100°C,
- The evaporator cell vapor space is assumed to be initially at 25% LFL,
- Evaporator cell ventilation is operating,
- The 242-25H Evaporator is operating (feed pump flow at 70 gpm),
- Waste accumulates in the evaporator cell from either a slow or fast leak (leak different than pot leak sites) due to a waste containment (e.g., evaporator pot, evaporator jumper) failure,
- Evaporator cell ventilation fails (atmospheric breathing is assumed),
- No credit is taken for evaporator cell leak detection,
- In the case of the slow leak only, the leak continues until it overflows into the ventilation system and is detected,
- The operators detect the slow or fast leak and terminate feed to the pot,
- Flammable gases are generated/released from the waste spilled in the evaporator cell, with the spilled waste temperature dependent on the type of leak,
- In the case of the fast leak, the spilled waste is assumed to be greater than 100°C (waste is assumed to have been in the heated evaporator pot). The spilled waste dissolves the 1,000 gallons of salt in cell from pot leak sites and releases its trapped gas instantaneously,
- In the case of the slow leak, the spilled waste from the slow leak is assumed to have cooled over the long leak duration such that a waste temperature of less than or equal to 100°C is assumed. The slow leak dissolves the 1,000 gallons of salt in the cell from pot leak sites; however, the trapped gas released from dissolving the saltcake present in the bottom of the cell is swept out of the cell by the cell ventilation long before the slow leak achieves the maximum waste level,

- No dissolved hydrogen is released from the fast or slow leaked material at the time of the leak since the dissolved hydrogen was already released from the waste in the heated evaporator pot prior to the leak,
- Flammable vapors accumulate in the evaporator cell vapor space for ≤ 10 days (the vapor is assumed to be at the same temperature as the spilled or transferred waste),
- Hydrogen is assumed to mix uniformly with the air in the vapor space (i.e., there is no stratification or pocketing),
- An ignition source is present (no ignition source controls are credited),
- Flammable vapors in the evaporator cell vapor space deflagrate or detonate (depending on when ignition occurs relative to the flammable gas concentration). The ignition is assumed to occur when the volume of hydrogen is reached that produces the maximum consequences within the specified event duration (alternatively, the calculated hydrogen concentration can be conservatively assumed to reach stoichiometric conditions regardless of the specified event duration),
- If an explosion occurs, the explosion causes a portion of the radioactive material in the facility to become airborne (For a detonation, the blast and/or shock wave effects from the detonation causes material to become airborne. For a deflagration, the heat from the deflagration causes some of the liquid waste from the top layer of the waste to boil and the boiling evaporation from the explosion causes material to become airborne.),
- The overpressure from the explosion causes the cell covers to lift off of the evaporator cell, ejects any installed HEPA filters, and/or creates other openings (vent paths) in the cell,
- The air expansion from the heat of the explosion causes air to be expelled from the evaporator cell. This expelled air carries with it the previously described material made airborne by the explosion,
- The airborne material that has escaped from the evaporator cell during the explosion is transported to Onsite and Offsite receptors,
- If an explosion occurs (i.e., in the fast leak case), the explosion damages the evaporator pot and evaporator jumpers, thereby initiating an Evaporator System leak/break in the evaporator cell (progression discussed in DSA Addendum Section 3.11),
- Evaporator cell retains any liquid waste that spills from failed evaporator pot and evaporator jumpers (based on a review of the evaporator cell design (Ref. 10), the evaporator cell will relieve pressure following an explosion via cell cover lifting, preventing the cell from failing).

The 242-25H Evaporator System seismic event scenario considers a seismic event occurring during normal operation of the evaporator, which results in the entire contents of the pot emptying into the cell with additional waste feed from the evaporator feed

pump before the operator can terminate operation. The general progression for seismic event scenario leaks originating for the Evaporator System is provided below:

- The 242-25H Evaporator Cell sump is assumed to be full of waste (15.78 ft^3 [118 gallons]) at a nominal temperature of less than or equal to 100°C,
- The evaporator cell and pot surface contain a total of 1,000 gallons of salt from evaporator pot leak sites. The salt is at a nominal temperature of less than or equal to 100°C,
- The evaporator cell vapor space is assumed to be initially at 0% LFL because the evaporator is in a normal operating condition with a large evaporator cell having a high flow ventilation system (approximately 2,800 standard cubic feet per minute (scfm)),
- Evaporator cell ventilation is operating,
- The 242-25H Evaporator is operating (feed pump flow at 70 gpm),
- Seismic event occurs, causing:
    - Evaporator cell ventilation failure (atmospheric breathing is assumed), and
    - Total evaporator pot and feed jumper failure,
- Waste accumulates in the evaporator cell due to evaporator pot and feed jumper failure,
- The entire contents of evaporator pot are spilled into the evaporator cell,
- The feed pump continues to run for one hour before operators secure feed,
- Flammable gases are generated/released from the waste spilled in the evaporator cell, with the spilled waste temperature dependent on the type of leak,
- The spilled waste is assumed to be greater than 100°C (waste is assumed to have been in the heated evaporator pot),
- No dissolved hydrogen is released from the spilled material at the time of the spill since the dissolved hydrogen was already released from the waste in the heated evaporator pot prior to the spill,
- The spilled waste dissolves the 1,000 gallons of salt in the cell from pot leak sites and releases its trapped gas instantaneously,
- Flammable vapors accumulate in the evaporator cell vapor space for ≤ 10 days (the vapor is assumed to be at the same temperature as the spilled waste),
- Hydrogen is assumed to mix uniformly with the air in the vapor space (i.e., there is no stratification or pocketing),
- An ignition source is present (no ignition source controls are credited),
- Flammable vapors in the evaporator cell vapor space deflagrate or detonate (depending on when ignition occurs relative to the flammable gas concentration). The ignition is assumed to occur when the volume of hydrogen is reached that

produces the maximum consequences within the specified event duration (alternatively, the calculated hydrogen concentration can be conservatively assumed to reach stoichiometric conditions regardless of the specified event duration),

- If an explosion occurs, the explosion causes a portion of the radioactive material in the facility to become airborne (For a detonation, the blast and/or shock wave effects from the detonation causes material to become airborne. For a deflagration, the heat from the deflagration causes some of the liquid waste from the top layer of the waste to boil and the boiling evaporation from the explosion causes material to become airborne.),
- The overpressure from the explosion causes the cell covers to lift off of the evaporator cell, ejects any installed HEPA filters, and/or creates other openings (vent paths) in the cell,
- The air expansion from the heat of the explosion causes air to be expelled from the evaporator cell. This expelled air carries with it the previously described material made airborne by the explosion,
- The airborne material that has escaped from the evaporator cell during the explosion is transported to Onsite and Offsite receptors,
- Evaporator cell retains any liquid waste that spills from failed evaporator pot and evaporator jumpers (based on a review of the evaporator cell design (Ref. 10), the evaporator cell will relieve pressure following an explosion via cell cover lifting, preventing the cell from failing).

3.10.1.4 Mitigated Accident Progression

The unmitigated consequences of the 242-25H Evaporator Cell Explosion do not challenge the Offsite EGs, but do exceed the Onsite EGs (as documented in DSA Addendum Section 3.10.4). Where the 242-25H Evaporator Cell Explosion unmitigated consequences exceed the Onsite EGs, two SS levels of control are provided. Because the event involves an explosion, one additional SS level of control is provided.

The hydrogen concentration does not exceed the LFL in less than 10 days for the Evaporator System slow leak scenario because the operators terminate the leak, such that the hydrogen concentration does not exceed LFL within 10 days (Ref. 8). The hydrogen concentration exceeds the LFL in less than 10 days in the Evaporator System fast leak and seismic scenarios. Three SS levels of control are therefore provided for both the fast leak and seismic scenarios.

3.10.1.4.1 Fast Leak Scenario Mitigated Accident Progression

The initial condition controls for the fast leak scenario are as follows:

- The 242-25H Evaporator Cell Salt Evaluation Program is required to protect initial condition assumptions in the analysis regarding saltcake formation (to ensure that hydrogen concentration in the evaporator cell is within the assumed explosion analysis values). The 242-25H Evaporator Cell Salt Evaluation Program is discussed in DSA Addendum Section 3.8.

- 242-25H Evaporator Cell Sump Conductivity Probe/Alarm to provide verification of level in the evaporator cell structure (evaporator cell sump level) to ensure that hydrogen concentration in the evaporator cell is within the assumed explosion analysis values. The initial residual waste volume assumptions for the 242-25H Evaporator Cell are discussed in DSA Addendum Section 3.6.

The three levels of control for the fast leak scenario are as follows:

- The 242-25H Evaporator Cell Active Ventilation System (SS) was chosen as the first level of control to prevent an Evaporator Cell Explosion. The 242-25H Evaporator Cell Active Ventilation System shall provide a minimum flow through the 242-25H Evaporator Cell to prevent accumulation of a flammable mixture of hydrogen in the evaporator cell, thereby preventing an explosion. An actual purge flow rate of at least 50 scfm through the 242-25H Evaporator Cell maintains the concentration of flammable vapors in the cell bulk vapor space to less than or equal to 25% of the LFL during analyzed 242-25H Evaporator System non-seismic leak scenarios, accounting for radiolytic and thermolytic hydrogen generation (Ref. 8). Since the required flow is so much less than the nominal system flow (approximately 2,800 scfm), credited flow measurement equipment is not required.
- Instrumentation to detect the release (i.e., 242-25H Evaporator Cell Sump Conductivity Probe/Alarm) was credited as the second level of control. The instrumentation will alert operators to the event and allow for actions to minimize flammable vapor accumulation.
- The third level of control is the 242-25H Evaporator Cell structure. The 242-25H Evaporator Cell structure provides airborne waste confinement following an explosion in the 242-25H Evaporator Cell, supports ventilation system operation, and provides a liquid waste containment function to support the cell sump conductivity probe functionality. The controls supporting 242-25H Evaporator Cell structure integrity include critical lift controls, structural integrity controls, traffic controls, and tank top/secondary containment loading controls. The 242-25H Evaporator Cell structure does not prevent the event, but does provide mitigation close to the immediate hazard through passive confinement. The Emergency Response Program is also part of the third level of control. This program governs personnel evacuation following the Evaporator Cell Explosion event and response to the event to minimize the potential release/personnel exposure.

3.10.1.4.2 Seismic Leak Scenario Mitigated Accident Progression

The initial condition controls for the seismic leak scenario are as follows:

- The 242-25H Evaporator Cell Salt Evaluation Program is required to protect initial condition assumptions in the analysis regarding saltcake formation (to ensure that hydrogen concentration in the evaporator cell is within the assumed explosion analysis values). The 242-25H Evaporator Cell Salt Evaluation Program is discussed in DSA Addendum Section 3.8.

- 242-25H Evaporator Cell Sump Conductivity Probe/Alarm to provide verification of level in the evaporator cell structure (evaporator cell sump level) to ensure that hydrogen concentration in the evaporator cell is within the assumed explosion analysis values. The initial residual waste volume assumptions for the 242-25H Evaporator Cell are discussed in DSA Addendum Section 3.6.

The three levels of control for the seismic scenario are as follows:

- The first level of control is the Event Response Program (operator response) following the Seismic event. Operator response will be to restore ventilation or install/operate a portable ventilation system based on the time to LFL. Additional operator response will be to shut down the evaporator (secure steam to tube bundle and lance) and secure the evaporator feed pump. Additionally, as part of the first level of control, the portable ventilation system necessary to prevent 242-25H Evaporator Cell from becoming flammable is maintained functional and available.
- For the second level of control, the 242-25H Evaporator Cell structure is credited, along with controls supporting 242-25H Evaporator Cell structure integrity. The controls supporting 242-25H Evaporator Cell structure integrity include critical lift controls, structural integrity controls, traffic controls, and tank top/secondary containment loading controls. The 242-25H Evaporator Cell structure does not prevent the event, but does provide mitigation close to the immediate hazard through passive confinement.
- The third level of control is the Emergency Response Program, which will govern personnel evacuation following the 242-25H Evaporator Cell event and response to the event to minimize the potential release/personnel exposure.

The portable ventilation system, discussed above, is not required to be functionally classified as SS equipment (except for the backup manifold and flexible hose described in DSA Addendum Section 4.3). Additional information regarding the Evaporator Cell portable ventilation system requirements can be found in DSA Addendum Sections 4.3 and 5.6.4.

3.10.2 Frequency Determination

The Evaporator Cell Explosion events have been classified in the anticipated frequency bin (seismically initiated events have been classified in the unlikely frequency bin). No detailed frequency analyses were performed to lower the assumed frequency. Though not credited, the low probability of an ignition source being present with the vapor space above 100% of the LFL significantly reduce the probability of a 242-25H Evaporator Cell Explosion.

3.10.3 Source Term Analysis

Offsite and Onsite ST and dose calculations are based on reasonably conservative values. Background information regarding the methodologies used to calculate STs is given in CSTF DSA Section 3.4.1.1. Specific use of these methodologies for the 242-25H Evaporator Cell Explosion accident is discussed in detail below.

The overall 242-25H Evaporator Cell Explosion ST is made up of an explosion ST and an evaporator pot/jumper leak/break ST. The following discussions pertain only to the explosion ST associated with a cell explosion initiated by an evaporator system leak. Discussion of the derivation and calculation of the 242-25H Evaporator pot/jumper leak/break ST is provided in DSA Addendum Section 3.11.

3.10.3.1 Source Term Inputs and Assumptions

The inputs and assumptions used in determining the 242-25H Evaporator Cell Explosion STs are taken from Reference 8.

In addition to the general inputs and assumptions stated in the CSTF DSA and this DSA Addendum, the following inputs and assumptions were used in determining the explosion STs and are all taken from Reference 8, unless otherwise stated:

- The evaporator cell vapor space is assumed to be initially at 0% LFL in the 242-25H Evaporator System seismic event scenario. It is reasonably conservative to assume that the initial hydrogen concentration in the 242-25H Evaporator Cell vapor space at the start of the seismic event (i.e., loss of ventilation) is very small and can be neglected (assumed to be zero), since 1) the evaporator cell is relatively large with a high flow ventilation system (approximately 2,800 scfm) and 2) the ventilation system is in operation whenever the evaporator is in operation. Given the low probability of a seismic event, it is postulated that the hydrogen concentration with the ventilation operating would be essentially zero when a seismic event occurred.
- In determining initial hydrogen concentration in the evaporator cell, the 1,000 gallons of saltcake is assumed to have a nominal hydrogen generation rate of 1.5E-05 ft^3/gal-hr.
- The slow leak progression is evaluated at 100°C. Evaporator Bottoms leaks from the evaporator at an undetectable rate. The leak rate is sufficiently small such that the waste cools to less than or equal to 100°C.
- The fast leak progression is evaluated at 186°C and the seismic progression is evaluated at 180°C. A waste containment failure leads to the leak of hot Evaporator Bottoms into the evaporator cell. 186°C is the maximum temperature associated with the 242-25H Evaporator; therefore, 186°C is the maximum waste temperature that is used in the 242-25H Evaporator Cell Explosion fast leak analysis. 180°C is the nominal maximum temperature associated with the 242-25H Evaporator and is appropriate for use in the 242-25H Evaporator Cell Explosion seismic analysis.
- Saltcake is dissolved by the leaked waste in the slow leak progression. In the slow leak progression, the leaked Evaporator Bottoms is evaluated at a temperature of 100°C. Saltcake is assumed to be dissolved to maximize the volume of hydrogen generating material present in the cell. The analysis assumes that Evaporator Bottoms dissolves saltcake on a one to one ratio. In the slow leak scenario, ventilation does not fail until after all 33,685 gallons of Evaporator Bottoms has been spilled into the cell at which point all of the trapped gas

released from the dissolved saltcake will have been swept out by the ventilation. Conversely, in the fast leak and seismic analyses, Evaporator Bottoms is spilling at an elevated temperature; at such high temperatures solubility may be impacted; therefore, at such a rate the saltcake can be assumed to dissolve instantaneously, resulting in a trapped gas release that does impact the initial vapor space concentrations for the time to LFL analyses.

- All of the saltcake (1,000 gallons) is dissolved instantaneously in the fast leak and seismic analyses, releasing all trapped hydrogen instantaneously at time zero. Dissolution of saltcake results in the release of trapped hydrogen. Starting the time to flammable concentration analyses with all of the trapped hydrogen released into the vapor space at time zero minimizes the calculated times by assuming a non-zero initial concentration in the vapor space. Minimizing the time it takes to achieve flammable concentrations in the vapor space is conservative because it provides the minimum time in which the responsive actions must be made to prevent or mitigate the accident.
- The dose scaling factor for the salt formed in the 242-25H Evaporator Cell is five. The inhalation dose potential of the salt formed in the evaporator cell is five times the inhalation dose potential of 242-25H Evaporator Bottoms.

3.10.3.2 Source Term Derivation

The unmitigated radiological ST can be expressed in terms of airborne release of activity, using the standard ST equation (ST = MAR x DR x ARF x RF x LPF) described in CSTF DSA Section 3.4.1.1.1. The terms in the five factor ST formula are discussed below or are intrinsic to the explosion (detonation or deflagration) model.

3.10.3.2.1 Material at Risk

For the unmitigated analysis, the volume of MAR for this event is all of the waste in the evaporator cell prior to the time of a leak plus any of the waste that leaks into the cell. The MAR waste stream is 242-25H Evaporator Bottoms. The waste characteristics and inhalation dose potential on a per unit volume basis for this stream is given in DSA Addendum Section 3.3.

3.10.3.2.2 Damage Ratio

The DR is assumed to be one.

3.10.3.2.3 Airborne Release Fraction/Respirable Fraction

For detonations, the amount of waste that is aerosolized equals the equivalent TNT mass (ARF = 1.0). This assumption is inherent in the TNT equivalent model used for detonations. All particles and droplets, which become airborne, are assumed to be respirable (RF = 1.0).

3.10.3.2.4 Leak Path Factor

The LPF is assumed to be one.

3.10.3.3 Flammable Vapor Concentration Models

The flammable vapor concentration used in the ST calculations is determined by calculating the hydrogen concentration and correcting for any organics present. The hydrogen concentration and percent LFL at the time of the explosion is determined in the analysis (Ref. 8) using the flammable vapor concentration formulas described in CSTF DSA Section 3.4.1.1.2. For the slow leak case, the hydrogen concentration does not reach LFL in the 10 days between termination of the spill inside evaporator cell and addressing the spill (e.g., ventilation operation, removal of spilled waste) and no ST is required. For the other two cases analyzed (fast leak and seismic), the ST is the result of a detonation, because the hydrogen concentration reaches the LEL (detonation) in the 10 days between termination of the spill inside evaporator cell and addressing the spill (e.g., ventilation operation, removal of spilled waste).

3.10.3.4 Source Term Calculation

The STs associated with a cell explosion initiated by an Evaporator System leak were calculated in Reference 8 for both the fast leak and seismic cases using the detonation model described in CSTF DSA Section 3.4.1.1.2.

To determine the overall scenario unmitigated consequences for the 242-25H Evaporator Cell Explosion fast leak case, the fast leak explosion ST was added to the 242-25H Evaporator pot/jumper fast leak/break ST (calculated in Reference 11 and discussed in DSA Addendum Section 3.11.3).

3.10.4 Consequence Analysis

3.10.4.1 242-25H Evaporator Consequence Analysis

The consequences of the bounding 242-25H Evaporator Cell Explosion event are calculated in References 8 and 11.

The unmitigated and mitigated Offsite (≤ 0.8 rem) consequences for the bounding 242-25H Evaporator Cell Explosion scenario (explosion following a fast leak into the cell) do not challenge the Offsite EGs.

The unmitigated Onsite (> 100 rem) consequences for the bounding 242-25H Evaporator Cell Explosion scenario (explosion following a fast leak into the cell) exceed the Onsite EGs. The mitigated Onsite consequences for the bounding scenario (explosion following a fast leak into the cell) are zero because the event is prevented. The immediate vicinity worker risk is also judged to not exceed the applicable Onsite EGs due to the controls in place.

The unmitigated Onsite consequences for the explosion following a slow leak into the evaporator cell are zero because the hydrogen concentration does not exceed the LFL in less than 10 days.

The 242-25H Evaporator related controls credited in preventing the event or in reducing the consequences are described in DSA Addendum Section 3.10.5. The consequences of a 242-25H Evaporator Cell Explosion event following an NPH event are addressed cumulatively with other events in the NPH accident analyses in this DSA Addendum.

3.10.4.2 Consolidated (242-16H and 242-25H Evaporators) Consequence Analysis

The unmitigated and mitigated Offsite (≤ 0.8 rem) and Onsite (> 100 rem unmitigated, ≤ 7 rem mitigated) dose consequences for the bounding Evaporator Cell Explosion event (considering both the 242-16H and 242-25H Evaporators) are given in DSA Addendum Table 3.17-1. The derivation of the consolidated Evaporator Cell Explosion unmitigated and mitigated doses is shown in DSA Addendum Table 3.10-1.

Table 3.10-1: Consolidated Evaporator Cell Explosion Dose Consequences

Design Basis Accident	Dose Source	Unmitigated Offsite	Mitigated Offsite	Unmitigated Onsite	Mitigated Onsite
Evaporator Cell Explosion (considering 242-16H or 242-25H Evaporator analyses in CSTF DSA)	CSTF DSA 3.4.2.2	≤ 0.1	≤ 0.1	> 100	≤ 7
242-25H Evaporator Cell Explosion	DSA Addendum 3.10.4.1	≤ 0.8	≤ 0.8	> 100	0.0
DSA Addendum 3.10.4.2 Consolidated Evaporator Cell Explosion Dose (considering 242-16H or 242-25H Evaporator analyses in CSTF DSA and DSA Addendum)		≤ 0.8	≤ 0.8	> 100	≤ 7

3.10.5 Summary of Controls

In addition to the prohibited operations (stated in CSTF DSA Section 3.4.1.5.2) and general controls (stated in CSTF DSA Section 3.4.1.5.6 and DSA Addendum Section 3.8) specified elsewhere, the following controls are required to ensure that the consequences of a 242-25H Evaporator Cell Explosion event do not exceed the Onsite EGs and also to further reduce the associated risk (as discussed earlier in the mitigated accident progression).

3.10.5.1 Safety Significant Controls

<u>242-25H Evaporator Cell</u>: The 242-25H Evaporator Cell structure provides airborne waste confinement following an explosion in the 242-25H Evaporator Cell. The 242-25H Evaporator Cell structure also provides liquid waste containment to support conductivity probe functionality. The 242-25H Evaporator Cell structure also supports ventilation system operation.

<u>242-25H Evaporator Cell Active Ventilation System</u>: The 242-25H Evaporator Cell Active Ventilation System shall provide a minimum flow through the 242-25H Evaporator Cell to prevent accumulation of a flammable mixture of hydrogen.

<u>242-25H Evaporator Cell Sump Conductivity Probe/Alarm:</u> The 242-25H Evaporator Cell sump conductivity probe shall provide control room alarm following a primary containment waste release into the 242-25H Evaporator Cell. The 242-25H Evaporator Cell sump conductivity probe also provides verification of level in the evaporator cell structure (evaporator cell sump level) to ensure that hydrogen concentration in the evaporator cell is within the assumed explosion analysis values.

<u>Emergency Response Program</u>: A facility specific annex to the Site Emergency Plan (SCD-7) shall be established to govern personnel evacuation following an Evaporator

Cell Explosion event and response to the event to minimize the potential release/personnel exposure.

Event Response Program: Procedures shall be established governing required actions following a Seismic event. These procedures shall require the following operator actions:

1) Shut down the 242-25H Evaporator (secure steam to tube bundle and lance) and secure evaporator feed pump.
2) Restore the 242-25H Evaporator PVS or install/operate a portable ventilation system on the 242-25H Evaporator Cell, based on the time to LFL.

The portable ventilation system, discussed in Item 2, is not required to be functionally classified as SS equipment (except for the backup manifold and flexible hose described in DSA Addendum Section 4.3). Additional information regarding the Evaporator Cell portable ventilation system requirements can be found in DSA Addendum Sections 4.3 and 5.6.4.

3.11 242-25H Evaporator Overflow, Leaks, and Spills

3.11.1 Scenario Development

3.11.1.1 Background

The purpose of the 242-25H Evaporator in the CSTF is to concentrate high level radioactive waste by evaporation. Waste is transferred from the evaporator feed tank to the evaporator pot, with overheads being removed via the overheads system, and the concentrated waste being lifted to the evaporator drop tank. Liquids other than waste (e.g., flush water) are also added to the pot through various penetrations. Evaporator Overflow, Leaks, and Spills are possible when waste leaks into the evaporator cell or pot additions cause the pot to overflow. If a jumper, gasket, valve or evaporator vessel leak occurs inside the evaporator cell, the leakage is contained within the cell structure. As discussed in DSA Addendum Section 2.1, leak sites that were estimated to have a maximum estimated leak rate of 500 mL/day/leak site were discovered in the 242-25H Evaporator pot in February 2016.

3.11.1.2 Accident Initiators

242-25H Evaporator Overflow, Leaks, and Spills encompass a broad range of activities that could potentially lead to various types of material release. Unmitigated releases of radioactive material from the evaporator vessel and associated equipment can occur into the 242-25H Evaporator Cell. The pre-existing 242-25H Evaporator leak sites discussed in DSA Addendum Section 3.4 (i.e., leak sites that leak less than or equal to three gallons per day (Ref. 6)) were considered within the DBA initial conditions and therefore are not considered DBA accident initiators.

The CHA (Ref. 3) did not identify events associated with 242-25H Evaporator Overflow, Leaks, and Spills that required further analysis. The CHA did identify the Evaporator Cell Explosion as requiring further analysis, and to determine the overall scenario consequences for a 242-25H Evaporator Cell Explosion, the 242-25H Evaporator pot/jumper fast leak/break consequences must be included (as discussed in DSA Addendum Section 3.10.3).

For the purpose of this analysis, the 242-25H Evaporator Overflow, Leaks, and Spills events have been grouped into five different categories:

- Evaporator System Leaks/Breaks in the Evaporator Cell
- Evaporator Waste Overfeed
- Evaporator Non-Waste Overfill
- Rainfall Flooding
- Liquid Addition Resulting in Overpressurization

The various categories are discussed in detail in DSA Addendum Section 3.11.1.3. The same events that evolve into Evaporator Overflows, Leaks, and Spills are, in many instances, the same initiators for a 242-25H Evaporator Cell Explosion. The 242-25H Evaporator Cell Explosion scenarios are discussed in DSA Addendum Section 3.10.

3.11.1.3 Unmitigated Accident Progression

3.11.1.3.1 242-25H Evaporator System Leaks/Breaks in the Evaporator Cell

Evaporator System leaks and breaks in the evaporator cell involve leaks within the evaporator cell from the vessel, or from pipes, jumpers or valves going to or from the evaporator. The possible initiators for an Evaporator System leak/break could be caused by corrosion, vibration, brittle fracture, jumper connector failure, and valve leaks, or the leak/break could be the result of a seismic event.

The worst case non-seismic scenario would be a fast leak spilling waste from the evaporator lift into the evaporator cell, where it would collect in the cell sump. A slow leak could eventually result in a larger maximum spill volume, but the time frame required to reach the maximum spill volume is so long that the fast leak consequences are bounding. The highest elevation for a non-seismic fast leak would be at the high point of the lift jumper, and the analyzed elevation is at the bottom of the evaporator cell covers, which bounds any lift jumper elevation.

The worst case seismic scenario would be a rupture of the 242-25H Evaporator pot with the spilled waste collecting in the evaporator cell. The lift break was chosen as the bounding non-seismic accident instead of the feed break because the lift break has a larger associated maximum spill volume; even though the feed rate is larger, the feed break would be detected and addressed much sooner due to more indications of the leak. The isotopic concentrations used in the 242-25H Evaporator Bottoms ST bounds both the feed and lift material.

The accident progression for the Evaporator System leak/spills is as follows: Waste is being fed to or lifted from the pot. The feed/lift line breaks or leaks, and waste is spilled into the evaporator cell. As described earlier, the bounding leak is considered to be a fast leak. The fast leak scenario bounds the slow leak scenario because the time required to spill a larger amount of material at a slower rate (as in the slow leak scenario) exceeds the 8-hour exposure requirements of Reference 12. For the seismic initiated evaporator leak/spill, the evaporator is assumed to be at the high level limit when the seismic event

occurs. The pot is assumed to fail, and the entire contents empty into the evaporator cell with the feed pump being shutdown within one hour.

3.11.1.3.2 242-25H Evaporator Waste Overfeed

Evaporator overfeed events involve overfilling of the 242-25H Evaporator vessel with feed material from the 242-25H Evaporator feed tank. It is assumed that operator error or equipment failure causes feed material to be unintentionally pumped into the evaporator via its normal path through the feed nozzle. If the evaporator vessel and connected equipment retain their boundary integrity, feed material would eventually backup and spill from the overheads condenser non-condensable gas vent or from the Mercury Removal Tank (MRT) vent. Spillage from the overheads condenser vent is directly into the evaporator cell from an elevated location. Spillage from the MRT vent in the 242-25H Evaporator is directly into the evaporator cell from an elevated location well above the floor.

In the 242-25H Evaporator System, overheads condensate drains from the overheads condenser to the in-service overheads receiver tank, as would excess feed that passes through the overheads condenser. However, the overheads receiver tanks are alarmed on high level (not credited) and the fill status of the overheads receiver tanks is monitored frequently during evaporator operations (not credited). Operator action (not credited) would prevent the overheads receiver tanks from overflowing. If overflow should occur, the excess feed would be directed back to the feed tank via the tanks' overflow line. Waste remaining in the overheads receiver tank could pose an As Low As Reasonably Achievable concern, but has been shown to have a low dose risk to the Facility Worker (Ref. 13).

For the purposes of this event scenario, no credit is taken for diversion of excess feedback to a feed tank or for excess feed material moving to the overheads receiver tanks. Taking no credit is conservative for this event in that overflow through the overheads condenser and MRT vents, and accumulation in the evaporator cell, is maximized.

The overfeed event is bounded by the Evaporator System Leaks/Breaks event because there are less means of detecting that event and more volume of material spilled than in the overfeed event. The maximum waste release due to a waste feed overflow is bounded by the maximum spill volume for an evaporator leak/break (15,600 gallons for a 242-25H Evaporator seismic event, 8,550 gallons for non-seismic events). This is based on the waste feed overflow being detected much sooner than the Evaporator System leak/break. Normal evaporator operating activities would preclude the overflow resulting in a larger maximum spill volume. Therefore, the unmitigated consequences calculated for the Evaporator System leak/break are used for the waste feed overflow.

3.11.1.3.3 242-25H Evaporator Non-Waste Overfill

This event involves addition of non-waste liquid to the evaporator pot while the pot is full of waste. Potential sources include (but are not limited to) flushwater through the flushwater addition line, flushwater through the Gravity Drain Line, flushwater through the demister spray, flushwater through the dip tubes, condensing steam from the lance, and cooling water from an overheads condenser tube rupture. By inspection, it is clear

that these events would be radiologically bounded by the waste overfeed event because the addition of non-waste would dilute the waste, resulting in lesser amounts of MAR than are present in other events. In addition, overfill by non-waste feed sources is not considered possible to occur because:

- Evaporator operation is deliberate and level is constantly monitored and alarmed.
- Flushwater additions are deliberate activities and are performed on a batch basis, and multiple flushwater tank refills during flushwater additions would be required to reach the pot overflow volume.
- Volume in the cooling tower basin, along with makeup water, cannot physically fill the 242-25H Evaporator (i.e., approximately 7,360 gallons needed to overfill when at the high level limit but only 4,208 gallons available from the basin). If a tube leak did occur in the overheads condenser, the liquid would typically drain out the overheads condenser to the overheads system and/or out the overheads condenser vent instead of making its way to the evaporator pot. The overheads condenser vent itself would be able to handle the leak rate and prevent liquid backing up to the evaporator pot.

3.11.1.3.4 242-25H Evaporator Rainfall Flooding

Rainfall flooding involves flooding of the evaporator cell by natural precipitation events and consequential rupture of the evaporator vessel and/or related components. The initiating HA event attributed the rupture to “moving” of the equipment caused by the flooding. Because the evaporator cell structure is constructed of reinforced concrete with design provisions to preclude in-leakage, there is no credible mechanism for floodwaters to flow through the cell with sufficient lateral force to dislodge the evaporator vessel or other related components. The judgment is that only buoyant forces in the vertical direction would cause the damage.

In order for the evaporator vessel to become buoyant, the mass of the evaporator and connected piping, the mass of the contained feed material (nominal specific gravity of 1.3) and concentrated evaporation product (242-25H Evaporator maximum specific gravity of 1.8), and the anchorage of the equipment to the concrete cell structure would have to be overcome. For this to happen, the level of rainwater inside the evaporator cell (outside the pot) would have to significantly exceed the level of feed material inside the pot.

The normal operating level within the vessel is above the evaporator’s vertical midpoint. Accumulation of rainwater to this depth is not credible. Even if the cell cover and rain cover were removed, the worst precipitation event cannot fill the cell to that level. Because the evaporator cell has at least one exterior wall exposed at grade level, and the surrounding grade does not impound water against the building, it is not possible to surround the cell with flood waters of sufficient depth to fill the interior of the cell, even if in-leakage were possible.

For the previously mentioned reasons, this event is considered not credible and thus not addressed further.

3.11.1.3.5 Liquid Addition Resulting in 242-25H Evaporator Overpressurization

Pressurized waste feed additions to the pot could cause pot pressure to increase but would not result in a pot breach because the demister (and downstream piping) does not plug and the liquid is allowed to flow to the overheads system. The waste feed flow into the pot is limited by the pump pressure and/or by the supply piping configuration. For these reasons, the pressure sources cannot provide enough flow to exceed the capacity of the exit piping of the evaporator. The 242-25H Evaporator feed pump is capable of providing a maximum flow rate of 70 gpm and the 242-25H Evaporator feed pump discharge pressure exceeds the pot design failure pressure (32 psig).

242-25H Evaporator waste feed overpressurization is prevented by the relief capacity of the evaporator overheads condenser vent and outlet. The 242-25H Evaporator overheads condenser has a 6-inch vent. Per Reference 14, a 6-inch schedule 40 line can discharge greater than 3,000 gpm at a pressure of 10 psig. Although pressure losses exist, the outlet capacity of the overheads condensers greatly exceeds the sources and thus it can be concluded that pot overpressure is not a concern.

Based on a review of the demister properties in Reference 15, liquid level increases are not assumed to cause pluggage of the demister. Pot liquid level control is not credited in preventing an overpressurization due to uncontrolled liquid addition. Based on the preceding assessment, overpressurizing the evaporator pot to failure is judged not to occur and is not addressed further.

3.11.1.4 Mitigated Accident Progression

The unmitigated consequences of the 242-25H Evaporator Overflow, Leaks, and Spills do not challenge the Offsite or exceed the Onsite EGs (as documented in DSA Addendum Section 3.11.4). Because the unmitigated accident scenarios do not challenge the Offsite or exceed the Onsite EGs, no mitigated analysis is required.

3.11.2 Frequency Determination

The Evaporator Overflow, Leaks, and Spills events have been classified in the anticipated frequency bin. No detailed frequency analyses were performed for the anticipated events to lower the assumed frequency. Other potential initiators of an evaporator pot release (i.e., rainfall flooding or liquid addition resulting in overpressurization) were assessed, as discussed previously, and judged to be not credible.

3.11.3 Source Term Analysis

Offsite and Onsite ST and dose calculations are based on reasonably conservative values. Background information regarding the methodologies used to calculate STs is given in CSTF DSA Section 3.4.1.1. Specific use of these methodologies for this accident is discussed in detail below.

3.11.3.1 Source Term Inputs and Assumptions

In addition to the general inputs and assumptions stated in the CSTF DSA and this DSA Addendum, the following inputs and assumptions were used in determining the 242-25H Evaporator Overflow, Leaks, and Spills STs and are taken from Reference 11:

- The 242-25H Evaporator Cell seismic leak/spill involves spill of Evaporator Bottoms from a nominal height (≤ 3 meters) in the 242-25H Evaporator Cell.
- The 242-25H Evaporator Cell non-seismic leak/spill involves spill of Evaporator Bottoms from an elevated height (≤ 10.0 meters) in the 242-25H Evaporator Cell.
- The 242-25H Evaporator Cell leak involves a leak rate of 5.2 gpm.

3.11.3.2 Source Term Derivation

Unmitigated STs were derived using the standard ST equation (ST = MAR x DR x ARF x RF x LPF) described in CSTF DSA Section 3.4.1.1.1. The terms in the five factor ST formula are discussed below, including discussion of case specific parameters.

3.11.3.2.1 Material at Risk

The volume of MAR for the 242-25H Evaporator System leaks/spills in the evaporator cell event is the waste volume assumed to leak/spill undetected into the evaporator cell. This volume varies for the different cases with the bounding MAR being 15,600 gallons in the 242-25H Evaporator seismic scenario.

3.11.3.2.2 Damage Ratio

The DR is assumed to be one.

3.11.3.2.3 Airborne Release Fraction/Respirable Fraction

The ARFs and RFs associated with the 242-25H Evaporator System leak/spill in the evaporator cell are as follows (Ref. 11).

- The ARF x RF for pressurized spray is 1.0E-04 (1.0E-04 (ARF) x 1.0 (RF)).
- The ARF x RF for concentrated heavy metal solution (density ≥ 1.2 g/cc) spill (≤ 3-meter fall distance) is 2.0E-05 (2.0E-05 (ARF) x 1.0 (RF)).
- The ARR x RF for aerodynamic entrainment (indoor resuspension, forced ventilation) is 4.0E-07/hour (4.0E-07/hour (ARR) x 1.0. (RF)).

3.11.3.2.4 Leak Path Factor

The LPF is assumed to be one for all scenarios. No credit is taken for plateout on the cell walls or leakage paths.

3.11.3.3 Source Term Calculation

STs were calculated in Reference 11. The bounding ST resulted from the 242-25H Evaporator System leaks/breaks seismic scenario.

3.11.4 Consequence Analysis

3.11.4.1 242-25H Evaporator Consequence Analysis

The consequences of the bounding 242-25H Evaporator Overflow, Leaks, and Spills event are calculated in Reference 11. The unmitigated and mitigated Offsite (≤ 0.1 rem) consequences for the bounding 242-25H Evaporator Overflow, Leaks, and Spills scenario (Seismic Spill of 15,600 gallons of 242-25H Evaporator Bottoms) do not challenge the Offsite EGs. The unmitigated and mitigated Onsite (≤ 6 rem) consequences for the bounding 242-25H Evaporator Overflow, Leaks, and Spills scenario (Seismic Spill of 15,600 gallons of 242-25H Evaporator Bottoms) do not exceed the Onsite EGs. The immediate vicinity worker risk is also judged not to exceed the applicable Onsite EGs due to the presence of the evaporator cell.

The 242-25H Evaporator related controls credited in preventing the event or in reducing the consequences are described in DSA Addendum Section 3.9.5. The consequences of a 242-25H Evaporator Overflow, Leaks, and Spills event following an NPH event are addressed cumulatively with other events in the NPH accident analyses in this DSA Addendum.

3.11.4.2 Consolidated (242-16H and 242-25H Evaporators) Consequence Analysis

The unmitigated and mitigated Offsite (≤ 0.1 rem) and Onsite (> 100 rem unmitigated, ≤ 35 rem mitigated) dose consequences for the bounding Evaporator Overflow, Leaks, and Spills event (considering both 242-16H and 242-25H Evaporators) are given in DSA Addendum Table 3.17-1. The derivation of the consolidated Evaporator Overflow, Leaks, and Spills unmitigated and mitigated doses is shown in DSA Addendum Table 3.11-1.

Table 3.11-1: Consolidated Evaporator Pot Overflow, Leaks, and Spills Dose Consequences

Design Basis Accident	Dose Source	Unmitigated Offsite	Mitigated Offsite	Unmitigated Onsite	Mitigated Onsite
Evaporator Overflow, Leaks, and Spills (considering 242-16H or 242-25H Evaporator analyses in CSTF DSA)	CSTF DSA 3.4.2.3	≤ 0.1	≤ 0.1	> 100	≤ 35
242-25H Evaporator Overflow, Leaks, and Spills	DSA Addendum 3.11.4.1	≤ 0.1	≤ 0.1	≤ 6	≤ 6
DSA Addendum 3.11.4.2 Consolidated Evaporator Overflow, Leaks, and Spills Dose (considering 242-16H or 242-25H Evaporator analyses in CSTF DSA and DSA Addendum)		≤ 0.1	≤ 0.1	> 100	≤ 35

3.11.5 Summary of Controls

Since the unmitigated 242-25H Evaporator Overflow, Leaks, and Spills event consequences do not challenge the Offsite or exceed the Onsite EGs (as discussed in DSA Addendum Section 3.11.4), no additional controls are required beyond the prohibited operations (stated in CSTF DSA Section 3.4.1.5.2) and general controls (stated in CSTF DSA Section 3.4.1.5.6 and DSA Addendum Section 3.8) specified elsewhere.

3.12 Tornado and High Winds Event

The CHA (Ref. 3) identified the following event associated with a Tornado and High Winds Event: EOWL-7-002.

3.12.1 Tornado/High Winds Initiated 242-25H Evaporator Events

The Tornado/High Winds event is a credible initiator for multiple 242-25H Evaporator events; however, some were considered to be mutually exclusive. Multiple DBA progressions were evaluated for the 242-25H Evaporator.

3.12.1.1 Evaporator Overpressure Event

The Tornado/High Winds event is a credible initiator for an Evaporator Overpressure event. Operation of the 242-25H Evaporator with leak sites does not impact the Tornado/High Winds event scenarios or mitigated controls associated with Evaporator Overpressure and no Offsite or Onsite mitigated consequences are attributed to this event.

3.12.1.2 Evaporator Overflow/Leaks/Spills and Evaporator Cell Explosion Events

The Tornado/High Winds event is also a credible initiator for both an Evaporator Overflow/Leaks/Spills event and an Evaporator Cell Explosion event. Three levels of control are provided for the Tornado/High Winds initiated Evaporator Cell Explosion event while two levels of control are provided for the Tornado/High Winds initiated Evaporator Overflow/Leaks/Spills event.

The 242-25H Evaporator Cell is tornado/high winds qualified and will protect equipment inside the cell. Since the equipment is protected, there will be no spill of the evaporator pot or jumper contents into the cell to result in an LFL condition and subsequent explosion. The evaporator cell structure serves as the first level of control. The second level of control is the Severe Weather Response Program, which requires the evaporator to be shutdown (secure steam to tube bundle and lance) and evaporator feed pump to be secured upon receipt of a tornado watch/tornado warning/high wind warning. These actions will minimize any potential post-tornado/high winds release. For Evaporator Cell Explosion, the third level of control is the Emergency Response Program, which will govern personnel evacuation following the Tornado/High Winds initiated event and response to the event to minimize the potential release/personnel exposure. Therefore, there are no Tornado/High Winds event initiators for these mitigated accident progressions and no Offsite or Onsite consequences are attributed to these events. Operation of the 242-25H Evaporator with leak sites does not impact the Tornado/High Winds event mitigated progressions associated with Evaporator Cell Explosion and Evaporator Overflow/Leaks/Spills events. The selected controls remain sufficient and no mitigated Offsite or Onsite consequences are attributed to these events.

3.12.1.3 Evaporator Pot Explosion

The Tornado/High Winds event is a credible initiator for a 242-25H Evaporator Pot Explosion event. The updated hydrogen generation rate for 242-25H Evaporator Bottoms (discussed in DSA Addendum Section 3.7) can impact the Tornado/High Winds event scenarios associated with 242-25H Evaporator Pot Explosion. The updated hydrogen generation rate effects the time to LFL calculations associated with the 242-25H

Evaporator Pot Explosion progressions and correspondingly influences the response time available for operator action.

As discussed in the 242-25H Evaporator Pot Explosion DBA (DSA Addendum Section 3.9), the various evaporator pot explosion scenarios reach different hydrogen concentrations at the end of the 10-day event duration and therefore have different results. It cannot be assumed that 10 days will be available for operator action upon receipt of a tornado watch/tornado warning/high wind warning before LFL is reached in the evaporator pot (based on the updated bounding 242-25H Evaporator Bottoms hydrogen generation rate). Since a 10-day response period may not be available under all conditions, Offsite and Onsite consequences will be attributed to the 242-25H Evaporator Pot Explosion in the consolidated CSTF Tornado/High Winds consequence analyses discussed in DSA Addendum Section 3.12.2.2.

Some available controls that might be used to prevent and/or mitigate a 242-25H Evaporator Pot Explosion after a Tornado/High Winds Event were not utilized in consequence reduction because of the uncertainty regarding available response time prior to reaching LFL. The following measures are classified as SS since they provide additional defense-in-depth in preventing/mitigating a 242-25H Evaporator Pot Explosion following a Tornado/High Winds event:

- The Severe Weather Response Program, which requires the evaporator to be shutdown (secure steam to tube bundle and lance) and evaporator feed pump to be secured upon receipt of a tornado watch/tornado warning/high wind warning. The Severe Weather Response Program will reduce the probability of a 242-25H Evaporator Pot Explosion.
- The 242-25H Evaporator Cell is tornado/high winds qualified and will provide mitigation through passive confinement.
- The Emergency Response Program, which will govern personnel evacuation following the Tornado/High Winds initiated event and response to the event to minimize the potential release/personnel exposure.

3.12.2 Evaporator Tornado/High Winds Consequence Analysis

The unmitigated and mitigated consequences of a Tornado/High Winds event are given in DSA Addendum Table 3.17-1 (the reported unmitigated consequences are assumed to exceed the Offsite and Onsite EGs, since unmitigated consequences were not calculated).

3.12.2.1 242-25H Evaporator Consequence Analysis

The bounding Tornado/High Wind initiated 242-25H Evaporator event is the 242-25H Evaporator Pot Explosion scenario (detonation occurring during “Shutdown with no temperature decrease and a minimum waste liquid fill at 186°C” scenario) described in DSA Addendum Section 3.9. The bounding mitigated Offsite NPH consequences for a 242-25H Evaporator Pot Explosion scenario are ≤ 0.1 rem. The bounding mitigated Onsite NPH consequences for a 242-25H Evaporator Pot Explosion scenario are ≤ 6.6 rem.

3.12.2.2 Consolidated (242-16H and 242-25H Evaporators) Consequence Analysis

The Tornado/High Winds event mitigated consequences in the CSTF DSA (Ref. 1) did not reflect a contribution from any evaporator DBAs. The Evaporator DBA contribution (considering both the 242-16H and 242-25H Evaporators) to the mitigated consequences of the Tornado/High Winds event is therefore based solely on the 242-25H Evaporator contribution described in DSA Addendum Section 3.12.2.1. The derivation of the consolidated Evaporator DBA contribution to the Tornado/High Winds Event doses is shown in DSA Addendum Table 3.12-1.

3.12.2.3 Consolidated (CSTF) Consequence Analysis

The mitigated consequences of the Tornado/High Winds Event (for all of CSTF) are given in DSA Addendum Table 3.17-1. The Tornado/High Winds event mitigated consequences did not previously reflect a contribution from the evaporator DBAs. The mitigated Offsite (≤ 0.8 rem) and Onsite (≤ 27.9 rem) consequences (which include a contribution from a 242-25H Evaporator Pot Explosion event) do not challenge the Offsite or exceed the Onsite EGs. The immediate vicinity worker risk is also judged to not exceed the applicable Onsite EGs due to the controls in place. The derivation of the consolidated Tornado/High Winds Event doses is shown in DSA Addendum Table 3.12-1.

Table 3.12-1: Consolidated CSTF Tornado/High Winds Event Dose Consequences

Design Basis Accident	Dose Source	Unmitigated Offsite	Mitigated Offsite	Unmitigated Onsite	Mitigated Onsite
Evaporator Contribution (considering 242-16H or 242-25H Evaporator analyses in CSTF DSA) to Tornado/High Winds Event	CSTF DSA 3.4.2.17	N/A	0	N/A	0
242-25H Evaporator Contribution to Tornado/High Winds Event	DSA Addendum 3.12.2.1	N/A	≤ 0.1	N/A	≤ 6.6
DSA Addendum 3.12.2.2 Consolidated Evaporator DBA contribution to Tornado/High Winds Event Dose	DSA Addendum 3.12.2.2	N/A	≤ 0.1	N/A	≤ 6.6
CSTF DSA 3.4.2.17 Tornado/High Winds Event Dose		> 25	≤ 0.7	> 100	≤ 21.3
DSA Addendum 3.12.2.3 Consolidated CSTF Tornado/High Winds Event Dose (considering 242-16H or 242-25H Evaporator analyses in CSTF DSA and DSA Addendum)		> 25	≤ 0.8	> 100	≤ 27.9

3.12.3 Tornado/High Winds Controls

No additional Tornado/High Winds controls are required beyond the controls stated in CSTF DSA Section 3.4.2.17.5.

3.13 Seismic Event

The CHA (Ref. 3) identified the following event associated with Seismic Event: EOWL-7-001.

3.13.1 Seismic Initiated 242-25H Evaporator Events

The Seismic event is a credible initiator for multiple 242-25H Evaporator events; however, some were considered to be mutually exclusive. Multiple DBA progressions were evaluated for the 242-25H Evaporator.

3.13.1.1 242-25H Evaporator Overpressure and Overflow, Leaks, and Spills

As discussed in CSTF DSA Section 3.4.2.18.1.6, a seismic event is a credible initiator for an overpressure accident in the 242-25H Evaporator. Per CSTF DSA Section 3.4.2.18.4, the mitigated consequences for a 242-25H Evaporator Overpressure Event initiated by a seismic event are ≤ 0.1 rem Offsite and ≤ 9.8 rem Onsite. A Seismic event is also a credible initiator for an Evaporator Overflow/Leaks/Spills event in the 242-25H Evaporator. CSTF DSA Section 3.4.2.18.1.6, a 242-25H Evaporator overflow/leak/spill event is considered to be mutually exclusive with an overpressure event. The mitigated Offsite consequences for a 242-25H Evaporator Overflow/Leaks/Spill scenario initiated by a seismic event is ≤ 0.1 rem (Ref. 11). The mitigated Onsite consequences for a 242-25H Evaporator Overflow/Leaks/Spill scenario initiated by a seismic event is ≤ 1 rem (Ref. 11).

3.13.1.2 242-25H Evaporator Pot Explosion and Cell Explosion

A Seismic event is a credible initiator for both a 242-25H Evaporator Cell Explosion and a 242-25H Evaporator Pot Explosion, but these events would be mutually exclusive.

The seismic initiated 242-25H Evaporator Pot Explosion scenario with bounding consequences is the detonation occurring during "Shutdown with no temperature decrease and a minimum waste liquid fill at 186°C" scenario (described in DSA Addendum Section 3.9). The mitigated Offsite consequences for a 242-25H Evaporator Pot Explosion scenario initiated by a seismic event is ≤ 0.1 rem (Ref. 9). The mitigated Onsite consequences for a 242-25H Evaporator Pot Explosion scenario initiated by a seismic event is ≤ 6.6 rem (Ref. 9).

The seismic initiated 242-25H Evaporator Cell Explosion scenario is described in DSA Addendum Section 3.10. The mitigated Offsite consequences for a 242-25H Evaporator Cell Explosion scenario initiated by a seismic event is ≤ 0.7 rem (Ref. 8, 11). The mitigated Onsite consequences for a 242-25H Evaporator Cell Explosion scenario initiated by a seismic event are zero because the event is prevented (Ref. 8, 11).

3.13.2 Evaporator Seismic Consequence Analysis

The unmitigated and mitigated consequences of a Seismic event are given in DSA Addendum Table 3.17-1 (the reported unmitigated consequences are assumed to exceed the Offsite and Onsite EGs, since unmitigated consequences were not calculated).

3.13.2.1 242-25H Evaporator Consequence Analysis

The bounding seismic initiated 242-25H Evaporator DBA mitigated progressions are the Evaporator Cell Explosion Offsite (≤ 0.7 rem) and the Evaporator Pot Overpressure Accident Onsite (≤ 9.8 rem). The seismic initiated 242-25H Evaporator Cell Explosion event is described in DSA Addendum Section 3.10. The seismic initiated 242-25H Evaporator Pot Overpressure event is described in CSTF DSA Section 3.4.2.18.1.6.

3.13.2.2 Consolidated (242-16H and 242-25H Evaporators) Consequence Analysis

The Seismic Event mitigated consequences in the CSTF DSA (Ref. 1) included a contribution from the evaporator DBAs. The consolidated Evaporator DBA contribution (considering both the 242-16H and 242-25H Evaporators) to the mitigated consequences of the Seismic Event therefore must be based on the 242-16H and 242-25H Evaporator contribution described in CSTF DSA Section 3.4.2.18.4 and on the 242-25H Evaporator contribution described in DSA Addendum Section 3.12.2.1. The derivation of the consolidated Evaporator DBA contribution to the Seismic Event doses is shown in DSA Addendum Table 3.13-1.

As stated in CSTF DSA Section 3.4.2.18.4, the Onsite evaporator consequences reflect only a 100-meter exposure from the 242-25H Evaporator overpressure event, since the evaporator Onsite consequences are not cumulative (i.e., no single individual can be 100 meters downwind from the 242-16H and 242-25H Evaporators).

3.13.2.3 Consolidated (CSTF) Consequence Analysis

The mitigated consequences of the Seismic event (for all CSTF) are given in DSA Addendum Table 3.17-1. The mitigated Offsite (≤ 16.1 rem) and Onsite (> 100 rem) Seismic event consequences consider contributions from both the 242-16H and 242-25H Evaporators. The derivation of the consolidated Evaporator Overflow, Leaks, and Spills doses is shown in DSA Addendum Table 3.13-1.

Table 3.13-1: Consolidated CSTF Seismic Event Dose Consequences

Design Basis Accident	Dose Source	Unmitigated Offsite	Mitigated Offsite	Unmitigated Onsite	Mitigated Onsite
Evaporator Contribution (considering 242-16H or 242-25H Evaporator analyses in CSTF DSA) to Seismic Event (Evaporator Overpressure/Leak and Spill)	CSTF DSA 3.4.2.18	N/A	≤ 0.1	N/A	≤ 9.8
242-25H Evaporator Contribution to Seismic Event	DSA Addendum 3.13.2.1	N/A	≤ 0.7	N/A	≤ 9.8
DSA Addendum 3.13.2.2 Consolidated Evaporator DBA contribution to Seismic Event Dose	DSA Addendum 3.13.2.2	N/A	≤ 0.7	N/A	≤ 9.8
CSTF DSA 3.4.2.18 Seismic Event Dose		> 25	≤ 15.5	> 100	> 100
DSA Addendum 3.13.2.3 Consolidated CSTF Seismic Event Dose (considering 242-16H or 242-25H Evaporator analyses in CSTF DSA and DSA Addendum)		> 25	≤ 16.1	> 100	> 100

3.13.3 Seismic Controls

3.13.3.1 Safety Significant Controls

In addition to the Seismic controls stated in CSTF DSA Section 3.4.2.18.5, prohibited operations (stated in CSTF DSA Section 3.4.1.5.2), and general controls (stated in CSTF DSA Section 3.4.1.5.6 and DSA Addendum Section 3.8) specified elsewhere, the following controls (related to 242-25H Evaporator Cell Explosion) are required to reduce

the consequences of a Seismic event (as discussed in DSA Addendum Sections 3.10.1 and 3.13.1) or establish the initial conditions at the time of the Seismic event.

242-25H Evaporator Cell: The 242-25H Evaporator Cell structure provides airborne waste confinement following an explosion in the 242-25H Evaporator Cell. The 242-25H Evaporator Cell structure also provides liquid waste containment to support conductivity probe functionality.

242-25H Evaporator Cell Sump Conductivity Probe/Alarm: The 242-25H Evaporator Cell sump conductivity probe provides verification of level in the evaporator cell structure (evaporator cell sump level) to ensure that hydrogen concentration in the evaporator cell is within the assumed explosion analysis values. The conductivity probe is not credited with functioning during or following the Seismic event, but protects assumed initial conditions at the time of the Seismic event.

Emergency Response Program: A facility specific annex to the Site Emergency Plan (SCD-7) shall be established to govern personnel evacuation following an Evaporator Cell Explosion event and response to the event to minimize the potential release/personnel exposure.

Event Response Program: Procedures shall be established governing required actions following a Seismic event. These procedures shall require the following operator actions:

1) Shut down the 242-25H Evaporator (secure steam to tube bundle and lance) and secure evaporator feed pump.
2) Restore the 242-25H Evaporator PVS or install/operate a portable ventilation system on the 242-25H Evaporator Cell, based on the time to LFL.

The portable ventilation system, discussed in Item 2, is not required to be functionally classified as SS equipment (except for the backup manifold and flexible hose described in DSA Addendum Section 4.3). Additional information regarding the Evaporator Cell portable ventilation system requirements can be found in DSA Addendum Sections 4.3 and 5.6.4.

3.14 Wildland Fire

The CHA (Ref. 3) identified the following event associated with Wildland Fire: EOWL-7-003.

Operation with leak sites does not significantly impact the initial conditions assumed for a Wildland Fire. The safety related controls remain the same as within the CSTF DSA, but the first and second levels of control are swapped. No Offsite or Onsite consequences are attributed to the evaporator events based on the existing controls described in the following.

The 242-25H Evaporator Cell is qualified SC to withstand a Wildland Fire and will protect equipment inside the cell. Since the equipment is protected, there will be no spill of the evaporator pot or jumper contents into the cell to result in an LFL condition and subsequent explosion. The evaporator cell structure serves as the first level of control. The second level of control is the Event Response Program, which requires the evaporator to be shutdown (secure steam to tube bundle and lance) and evaporator feed

pump to be secured prior to the Wildland Fire reaching the Evaporator Systems. These actions will minimize any potential post-Wildland Fire release. For Evaporator Cell Explosion, the third level of control is the Emergency Response Program, which will govern personnel evacuation following the Wildland Fire initiated event and response to the event to minimize the potential release/personnel exposure.

3.15 Loss of Offsite Power

Operation with leak sites does not significantly impact the initial conditions assumed for a Loss of Offsite Power. A Loss of Offsite Power does not change the initiators for the Evaporator Pot Explosion and Evaporator Cell Explosion events. A Loss of Offsite Power is not assumed to occur coincident with a large leak into the Evaporator Cell (i.e., due to a fast leak or seismic event).

3.16 Evaporator System Data

Select evaporator system data in CSTF DSA Table 3.4-4 has been superseded by the data in DSA Addendum Table 3.16-1 to reflect revised Evaporator Inputs. The CSTF DSA Table 3.4-4 evaporator system data not included in DSA Addendum Table 3.16-1 remains valid.

Table 3.16-1: Updated 242-25H Evaporator System Data

Evaporator Parameter	242-25H (Ref. 6)	Applicable Accident (DSA Addendum Section)
Total Pot Volume	18,621 gallons	3.9
Pot Maximum Waste Volume (Normal Operation)	11,265 gallons @ 110 inches	3.9, 3.10
Pot Minimum Waste Volume	9,619 gallons @ 92.5 inches	3.9
Maximum Feed Flow Rate	70 gpm	3.10, 3.11
Total Evaporator Cell Volume	15,430.32 ft^3	3.10
Maximum Evaporator Leak Rate	3 gal/day	3.9
Evaporator Cell Sump Volume	15.78 ft^3	3.10
Evaporator Cell Initial Waste (Residual) Liquid Volume	118 gallons (Ref. 8)	3.10
Evaporator Cell Initial Waste (Residual) Accumulated Salt Volume	1,000 gallons	3.10
Evaporator Cell Equilibrium Hydrogen % LFL (non-seismic)	25%	3.10

3.17 Airborne Radiological and Chemical Consequences for the DBAs

The airborne radiological (rem) and chemical (mg/m^3) consequences for the DBAs in CSTF DSA Table 3.4-7 have been updated in DSA Addendum Table 3.17-1 to reflect revised consequence changes resulting from this DSA Addendum.

Table 3.17-1: Updated Airborne Radiological (rem) Consequences for the DBAs

CSTF DSA Section	Design Basis Accident	Unmitigated Offsite	Mitigated Offsite	Unmitigated Onsite (100-meter)	Mitigated Onsite (100-meter)
3.4.2.1	Evaporator Pot Explosion	≤ 0.1	≤ 0.1	≤ 41	≤ 41
3.4.2.2	Evaporator Cell Explosion	≤ 0.8	≤ 0.8	> 100	≤ 7
3.4.2.3	Evaporator Overflow, Leaks, and Spills	≤ 0.1	≤ 0.1	> 100	≤ 35
3.4.2.17	Tornado and High Winds Event	> 25	≤ 0.8	> 100	≤ 27.9
3.4.2.18	Seismic Event	> 25	≤ 16.1	> 100	> 100

3.18 Offsite Radiological Consequence Analysis for the NPH DBAs

As discussed in CSTF DSA Section 3.4.1.3.1, the SRS engaged in a Dispersion Modeling Project to revise the site methodology for calculations of Offsite consequences from radiological releases postulated in a facility's accident analysis. This methodology differs from the initial CSTF methodology for offsite radiological consequence analysis. Total Effective Dose (TED) Factors for CSTF waste streams utilizing both the new and old dispersion model protocols are documented in Reference 7.

The new methodology differs from old in two parameters: 1) Surface roughness factor (160 cm vs. 100 cm), and 2) deposition velocity (0.6 to 0.7 cm/s vs. 1.0 cm/s). Additionally, the MACCS2 95th percentile calculations used in the new methodology analyses are based on 2002 through 2006 meteorological data that has been processed using updated methodology (Ref. 1).

Additional DOE guidance regarding the CSTF DSA radiological consequence analysis methodology was provided in Reference 27. Per Reference 27, the roll-up of Offsite receptor dose consequences associated with NPH events in this DSA Addendum will be the sum of:

- The new consequences (as applicable based on the affected NPH progression) associated with the individual DBAs revised in the DSA Addendum (i.e., 242-25H Evaporator Pot Explosion, 242-25H Evaporator Cell Explosion, and 242-25H Evaporator Overflow, Leaks, and Spills) using the new methodology.
- The existing consequences from other NPH event dose contributors (as documented in the CSTF DSA) based on the initial methodology.

4.0 Safety Structures, Systems, and Components Assessment

4.1 Safety Structures, Systems, and Components Review

Chapter 4 of the CSTF DSA (Safety Structures, Systems, and Components) provides details on those facility SSCs that are designated as SC and SS. DSA Addendum Table 4.1-1 contains an assessment of the impact (associated with technical issues described in DSA Addendum Section 1.0) that operation of the 242-25H Evaporator has on the DSA Safety SSCs (including new SSCs required by this DSA Addendum). DSA Addendum Sections 4.2 through 4.4 contain DSA supplemental information addressing the facility SSCs impacted by 242-25H Evaporator operation.

Table 4.1-1: Assessment of Safety Structures, Systems, and Components Impact

CSTF DSA Section Impacted	Topic	Impact of Leak Sites and the Hydrogen Generation Rate PISA on 242-25H Evaporator Operation Within the DSA
4.3.16	242-25H Evaporator Cell	Information within the DSA is superseded. The CSTF DSA Chapter 4 description of the 242-25H Evaporator Cell is being superseded with a new description to reflect the impact of the revised 242-25H Evaporator Cell Explosion DBA on the cell safety functions. A full assessment is covered in DSA Addendum Section 4.2.
4.4.35	242-25H Evaporator Steam Tube Bundle	No change to the DSA is required. The Evaporator Steam Tube Bundle safety function is not impacted by operation of the 242-25H Evaporator with leak sites. The pot leak will not affect tube bundle functionality.
4.4.36	242-25H Evaporator Lance Air Supply Line Orifices	No change to the DSA is required. The Evaporator Lance Air Supply Line Orifices safety function is not impacted by operation of the 242-25H Evaporator with leak sites. The pot leak will not affect orifice functionality.
4.4.37	242-25H Evaporator Lance Steam Supply Line Orifice	No change to the DSA is required. The Evaporator Lance Steam Supply Line Orifice safety function is not impacted by operation of the 242-25H Evaporator with leak sites. The pot leak will not affect orifice functionality.
4.4.39	242-25H Evaporator Lance Steam Pressure Control Valve and Lance Steam Pressure Relief Valve	No change to the DSA is required. The Evaporator Lance Steam Pressure Control Valve and Lance Steam Pressure Relief Valve safety function is not impacted by operation of the 242-25H Evaporator with leak sites. The pot leak will not affect valve functionality.
4.4.47	242-25H Evaporator Mercury Monitoring	No change to the DSA is required. The Evaporator Mercury Monitoring safety function is not impacted by operation of the 242-25H Evaporator with leak sites. The pot leak will not affect Mercury Monitoring functionality.
Tables 4.3-1 and 4.3-2	Safety Class SSCs and Safety Class Evaluations	The information required to be contained within these tables is provided within this DSA Addendum along with the associated SSC assessment when needed.

CSTF DSA Section Impacted	Topic	Impact of Leak Sites and the Hydrogen Generation Rate PISA on 242-25H Evaporator Operation Within the DSA
Tables 4.4-1 and 4.4-2	Safety Significant SSCs and Safety Significant Evaluations	The information required to be contained within these tables is provided within this DSA Addendum along with the associated SSC assessment when needed.
N/A (New SSC)	242-25H Evaporator Primary Ventilation System	Information within the DSA is supplemented. The 242-25H Evaporator Primary Ventilation System is added as a new SSC to reflect the revised 242-25H Evaporator Cell Explosion DBA. A full assessment is covered in DSA Addendum Section 4.3.
N/A (New SSC)	242-25H Evaporator Cell Sump Conductivity Probe and High Level Alarm	Information within the DSA is supplemented. The 242-25H Evaporator Cell Sump Conductivity Probe and High Level Alarm is added as a new SSC to reflect the revised 242-25H Evaporator Cell Explosion DBA. A full assessment is covered in DSA Addendum Section 4.4.

4.2 242-25H Evaporator Cell

4.2.1 Safety Function and Functional Requirements

The 242-25H Evaporator Cell provides protection to the evaporator pot thereby preventing the release of radioactive material from the evaporator pot. The Evaporator Cell provides protection to the evaporator pot and associated equipment from tornado driven missiles and high winds. The Evaporator Cell structural integrity is also required to mitigate the release following a tornado/high winds initiated explosion in the evaporator or evaporator cell. The 242-25H Evaporator Cell structural integrity is required during normal operations, during an external fire event, and during a Tornado/High Winds Event.

The 242-25H Evaporator Cell is credited as an SC control for the following event:

- Tornado/High Winds Event
- Wildland Fire

In addition to having the same safety function and functional requirements as it does for SC, the 242-25H Evaporator Cell has multiple SS functions. The 242-25H Evaporator Cell is credited in the 242-25H Evaporator Cell Explosion DBA with providing liquid waste containment to support conductivity probe functionality (providing a containment feature to channel liquid to the level detection equipment) and with supporting portable ventilation system operation. For an Evaporator Cell Explosion initiated by a Seismic Event, 242-25H Evaporator Cell structural integrity is required to support ventilation system integrity (II/I).

The Evaporator Cell also provides passive containment for several DBAs during normal operations to minimize the potential for a release of radioactive material to the environment, following a release in the Evaporator Cell. If the cell structure survives

during a Seismic Event, the cell structure provides mitigation for a cell explosion through passive confinement.

The Evaporator Cell covers and plugs are an integral component of the Evaporator Cell and are necessary to fulfill the SS confinement function. These cell covers and plugs help form the boundary for airborne/aerosolized waste confinement for some events. The functionality of the cell covers and plugs is to remain in place during Evaporator Cell activities that have the potential to release airborne/aerosolized waste. For the Evaporator Cell Explosion event, the Evaporator Cell provides an overall gross confinement function and it is recognized that the explosion pressures could dislodge the cell plugs and that unrestrained cell plugs may not remain in place.

There are many activities that take place in the CSTF that require equipment to be installed through Evaporator Cell plugs, in addition to temporary work that requires cell plug removal. Some activities (e.g., liquid/vapor sampling) may have the cell plug(s) removed for the duration of the activity, but these activities are short in duration, typically controlled by procedure or work instruction, and represent a minimal time at risk. Longer duration activities (e.g., camera installed for periodic level monitoring) with the cell plug(s) removed, require the installation of temporary covers to ensure the safety function of the Evaporator Cell is met. Longer duration activities requiring cell plug removal (without installation of temporary covers) are acceptable, provided Engineering determines that the safety function of the Evaporator Cell is not compromised by the openings (e.g., ability of the Evaporator Cell to provide airborne confinement).

The 242-25H Evaporator Cell is credited as an SS control for the following events:

- 242-25H Evaporator Cell Explosion
- Transfer Line and Transfer Line Jacket/Encasement Explosions
- Seismic Event

4.2.2 System Description

The evaporator cell houses the evaporator pot and its internal components, and associated jumpers and service piping (e.g., hard piped water, air, steam). The interior of the cell is lined with stainless steel. Concrete cell covers seal the top of the cell during normal operations. See CSTF DSA Figure 4.3-5.

4.2.3 System Evaluation

Functionality is assured through the implementation of the Structural Integrity Program and associated testing/inspection.

The associated section of DSA Addendum Table 4.2-1 summarizes the Design Requirement (DR) evaluation for the 242-25H Evaporator Cell. The 242-25H Evaporator Cell meets the DRs for an SC SSC.

Table 4.2-1: 242-25H Evaporator Cell System Evaluation

Design Criteria Assessment Matrix 242-25H Evaporator Cell		
Design Requirements	**Requirement Met**	**Basis/References**
1. Design Basis Earthquake (DBE) Resistance	N/A	The Evaporator Cell is not credited during a DBE. If the Evaporator Cell structure survives during a Seismic Event, it is credited to provide mitigation for an explosion. The cell structure is not required to withstand the seismic event (i.e., the structure is not required to be PC-2 seismic qualified) since loss of confinement prior to the event would prevent the event (i.e., the flammable vapors would not accumulate).
2. Design Basis Tornado (DBT) Resistance	Yes	The Evaporator Cell was evaluated to meet current SC DBT requirements.
3. Probable Maximum Flood (PMF) Resistance	N/A	The Evaporator Cell is not credited during a PMF.
4. Probable Maximum Precipitation (PMP) Resistance	N/A	The Evaporator Cell is not credited during a PMP.
5. Explosion/Fire Resistance	Yes	The Evaporator Cell is constructed of non-combustible material. The concrete and stainless steel construction of the boxes provides limited integrity against an explosion and fire.
6. Single Active Failure Resistance	N/A	The Evaporator Cell is a passive device. Single failure design criteria is not applicable.
7. Equipment Environment Consideration	Yes	The Evaporator Cell is constructed of reinforced concrete and water proofed or lined with stainless steel.
8. SC Electrical Requirements	N/A	The Evaporator Cell does not require electrical power to perform its safety function.
9. ASME Sect. III or Other Applicable Requirements	Yes	The Evaporator Cell was designed and constructed to DuPont or Savannah River Site (SRS) standards, which have been determined to be consistent with applicable national consensus codes at the time of construction.
10. Quality Assurance (QA) Requirements	Yes	The Evaporator Cell met the DuPont standards of the time. Current QA requirements are met based on the compensatory actions given in CSTF DSA Section 4.3.
11. Internal Hazard Resistance	Yes	The reinforced concrete construction of the cell provides integrity against an internal hazard.
12. Maintenance Requirements	Yes	The Evaporator Cell is capable of being maintained.
13. Test Requirements	N/A	The Evaporator Cell is a passive design feature and not required to be tested.
14. Functionality	Yes	The Evaporator Cell is capable of protecting the equipment contained within the cell, providing containment of radioactive material, and providing confinement of radioactive material.

4.3 242-25H Evaporator Primary Ventilation System

4.3.1 Safety Function and Functional Requirements

The 242-25H Evaporator PVS controls the concentration of flammable vapors to less than or equal to 25% of the LFL conditions in the 242-25H Evaporator Cell by maintaining a minimum, continuous purge flow. Ventilation system flow indication is not required for this system.

The 242-25H Evaporator Cell PVS active ventilation function is required during normal operations. Active flow from the installed blower/fan is not required post-seismic. A section of the PVS exhaust, from the evaporator cell exhaust inlet to the manual isolation dampers, is required to maintain structural integrity during and following a seismic event (providing a passive flow path from the evaporator cell). This seismically qualified section will allow for the installation of portable ventilation after a seismic event.

The 242-25H Evaporator PVS is credited as an SS control for the following events:

- 242-25H Evaporator Cell Explosion
- Seismic Event (passive flow path safety function only)

4.3.2 System Description

The 242-25H Evaporator PVS provides ventilation flow to the evaporator cell and overheads condenser cell. The major SS components comprising the 242-25H Evaporator PVS are shown in DSA Addendum Figure 4.3-1 and listed below:

- Ventilation ductwork
- Manual dampers
- Outlet HEPA filter assemblies
- Exhaust fans/motors
- Exhaust stack

The 242-25H Evaporator PVS draws air into the overheads condenser cell through a filtered air inlet unit. The air flows through a transfer HEPA filter unit and enters the evaporator cell. Air flow may also be drawn into the evaporator cell through other cell penetrations (e.g., cell plugs). From the evaporator cell, the flow enters the air exhaust duct and then passes through one of two parallel HEPA filter units and one of two parallel exhaust fans. Downstream of the exhaust fans, the exhaust combines into a common header and flow is directed to the air discharge stack and dispersed into the atmosphere.

To satisfy the safety function, the ventilation system requires one operating fan generating the required purge flow through the system and an intact flow path (e.g., ductwork, filter housing) from the evaporator cell to the fan. Since there are multiple paths for evaporator cell air flow, the air introduction points to the evaporator cell are not required to be functionally classified as SS. The HEPA filter filtration characteristics are not required to support the SS flammable vapor control function of the

242-25H Evaporator PVS, but are functionally classified SS to permit required airflow from the cell.

The SS function requires ventilation fan operation and the structural integrity of the pressure boundary of the ventilation system and its components. The stack is SS for structural integrity to prevent a failure (such as crimping) that could cause a loss of ventilation flow.

The 242-25H Evaporator PVS shall be maintained at least as a Level 4 duct class (per Reference 24) for normal permissible leakage rate. Per Reference 25, the bounding in-leakage rate associated with Level 4 duct class for the 242-25H Evaporator PVS is 1.5 scfm. This potential in-leakage rate is extremely small and the minimum ventilation flow rate requirements from DSA Addendum Sections 3 and 5 are derived using various bounding conditions (e.g., hydrogen generation rate, trapped hydrogen release from accumulated salt). Additionally, nominal flow rates from the 242-25H Evaporator PVS typically exceed the minimum ventilation flow rate requirement by a significant amount. Therefore, no adjustment is necessary to flow rate requirements (determined/provided in the DSA Addendum / Technical Safety Requirements [TSRs]) to account for the Level 4 duct class permissible leakage rate.

The duct and HEPA filter housing are required to be seismically qualified from the evaporator cell exhaust inlet to the manual dampers downstream of the HEPA filter housing (DSA Addendum Figure 4.3-1). The qualification of this section of the PVS will allow for the installation of portable ventilation after a seismic event via connections on the HEPA filter unit housing. The Evaporator Cell Portable Ventilation Equipment is required to be available following a seismic event and is stored in a designated seismically qualified structure.

While not part of the 242-25H Evaporator PVS, the Evaporator Cell Portable Ventilation Equipment also contains some SS components that connect to the PVS. The Evaporator Cell Portable Ventilation Equipment includes an SS flexible hose and an SS PVS backup manifold. The flexible hose connects the PVS backup manifold to a connection on the HEPA filter unit housing. These SS components allow the portable ventilation unit to be connected (via a flexible duct) to the 242-25H Evaporator PVS. The PVS backup manifold and flexible hose were designed and procured as SS equipment and meet the DRs for an SS SSC.

4.3.3 System Evaluation

Functionality is assured through the implementation of applicable Surveillance Requirements (SRs), as identified in the TSRs, and the Structural Integrity Program and associated testing/inspection.

The associated section of DSA Addendum Table 4.3-1 summarizes the DR evaluation for the 242-25H Evaporator PVS. A general assessment of the applicable DRs is provided below.

DR-3 Functionality

The 242-25H Evaporator PVS has functionality vulnerabilities. Based on the reasons/discussions stated below, the 242-25H Evaporator PVS is deemed acceptable to meet the SS requirements:

- The time required to reach LFL in the evaporator cell, following loss of the 242-25H Evaporator PVS (assuming the worst-case evaporator leak scenario), is sufficient to allow for corrective actions upon system failures (loss of power, fan failure, damper failure, Variable Frequency Drive (VFD) failure).
- TSR SRs will require that the exhaust fan is operating and aligned to the evaporator cell every 24 hours to ensure that a loss of normal electrical power or loss of flow is detected in a timely manner.
- Multiple non-credited (e.g., control room alarms, vacuum/pressure/differential pressure indications) indicators are available to alert the operator to the loss of ventilation and to allow for corrective action. Based on the multiple loss of flow indicators, the time required to reach 100% LFL, and the availability of backup portable ventilation, it is judged that operations would be able to restore adequate ventilation flow to the evaporator cell before reaching LFL.
- Loss of power could involve a localized loss of power, such as to an individual substation or motor control center, or could involve a complete loss of offsite power. Operating experience at SRS has shown that, historically complete loss of power events are of short duration. Additionally, power is available to the PVS exhaust fans via non-credited standby diesel generator.
- The 242-25H Evaporator PVS has redundant exhaust fans. If a mechanical failure with one fan occurs, a non-credited interlock (not included in the SS function) would typically actuate on low flow conditions to start the standby train.
- Based on work history, the isolation dampers have proven to be reliable in the past. The pneumatic dampers in the PVS require instrument air to open and close, and are fail-as-is. Thus, a loss of flow (due to damper failure), would require the damper to fail (and re-align) concurrent with a failure of the non-credited standby train interlock.
- The VFDs are programmed such that the minimum rotational frequency is 900 revolutions per minute (rpm). The nominal frequency, and maximum programmed frequency, to achieve approximately 3,000 cubic feet per minute (cfm) is 1800 rpm. Therefore, the minimum flowrate under normal operation is approximately half or approximately 1,500 cfm. Since a minimum flowrate greater than or equal to 50 scfm will maintain the Evaporator Cell below 25% LFL (during analyzed 242-25H Evaporator System non-seismic leak scenarios), the minimum flowrate under normal conditions is judged to be acceptable. The VFDs are designed to shut down if a fault occurs. This fault condition would prevent continued operation of the exhaust fan in an undesired manner. If the primary train VFD is shut down, the resulting low flow condition would require

use of an alternate flow source (typically the non-credited interlock would actuate to start the standby train).

- The 242-25H Evaporator PVS is maintained and tested to current SS QA requirements. The system is inspected and tested periodically as part of the Structural Integrity Program, TSRs, maintenance programs, and other facility programs as appropriate.

Table 4.3-1: 242-25H Evaporator Primary Ventilation System Evaluation

Design Criteria Assessment Matrix 242-25H Evaporator Primary Ventilation System		
Design Requirements	**Requirement Met**	**Basis/References (Ref. 16)**
1. NPH Resistance	Yes	The 242-25H Evaporator PVS active components are not credited for NPH events. The credited passive PVS NPH components (the exhaust duct and HEPA filter housing from the evaporator cell to the manual isolation dampers) were evaluated to meet current SS seismic requirements.
2. Equipment Environment Consideration	Yes	The 242-25H Evaporator PVS components are designed for the industrial environment that they are operating in, and have shown their suitability to this environment by their demonstrated reliability.
3. Functionality	Yes	The 242-25H Evaporator PVS is used within the original design parameters of the system, however there are vulnerabilities (loss of power, mechanical failure, damper failure) associated with the system. Based on the compensatory actions in DSA Addendum Section 4.3.3, the Functionality DR has been satisfied.
4. Test Requirements	Yes	The 242-25H Evaporator PVS components are capable of being tested.
5. Maintenance Requirements	Yes	The 242-25H Evaporator PVS components are capable of being maintained.

Figure 4.3-1: 242-25H Evaporator Primary Ventilation System SS Components

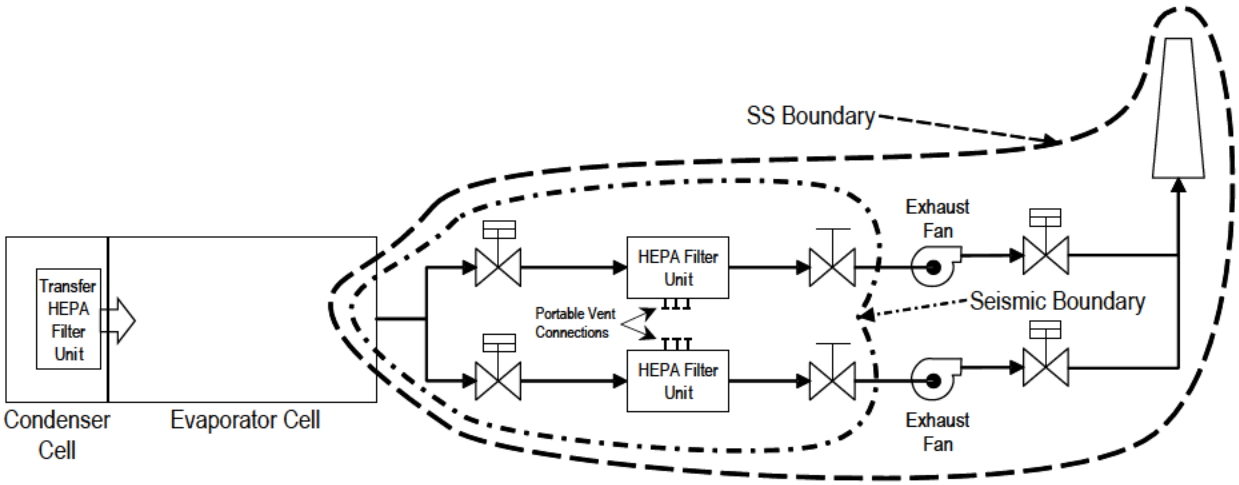

4.4 242-25H Evaporator Cell Sump Conductivity Probe and High Level Alarm

4.4.1 Safety Function and Functional Requirements

The 242-25H Evaporator Cell Sump Conductivity Probe and High Level Alarm circuit provides a control room alarm upon detection of liquid waste level greater than the initial waste volume given in Section 3 of this DSA Addendum to ensure the amount of waste in the cell does not produce a flammable vapor concentration. The 242-25H Evaporator Cell High Level Alarm is used to initiate operator actions to limit the amount of waste in the cell to less than the initial waste volume assumed in this DSA Addendum.

The 242-25H Evaporator Cell Sump Conductivity Probe and High Level Alarm is required during normal operations. The 242-25H Evaporator Cell Sump Conductivity Probe and High Level Alarm is credited as an SS control for the following event:

- 242-25H Evaporator Cell Explosion
- Seismic Event (protects initial condition only)

4.4.2 System Description

The major components of the 242-25H Evaporator Cell Sump Conductivity Probe and High Level Alarm circuit consist of a stainless steel sensing probe, aircraft cable/wiring, level sensing relay, and control room panel alarm/annunciator. Power supplies to the sensing circuit and annunciator, and the functional test switch are not within the SS boundary. Additionally, the 242-25H Evaporator Cell Sump Conductivity Probe and High Level Alarm circuits may utilize time delay relays (less than or equal to 60 seconds) to avoid relay chatter associated with electronic noise signals. This time delay period, prior to alarm actuation, is judged to have an insignificant impact on initiating operator actions for the event.

All active and passive components that comprise the sensing and instrumentation circuit are considered SS components. These components include but are not limited to the signal cable, grounding pathway, terminal blocks, cable connectors, sensing relays, time delay relays, alarm relays, alarm bistables, and annunciators. The control room alarm must provide both audible and visual indications of the alarm condition.

4.4.3 System Evaluation

Functionality is assured through the implementation of applicable SRs, as identified in the TSRs.

The associated section of DSA Addendum Table 4.4-1 summarizes the DR evaluation for the 242-25H Evaporator Cell Sump Conductivity Probe and High Level Alarm. A general assessment of the applicable DRs is provided below (Ref. 17).

DR-3 <u>Functionality</u>

The 242-25H Evaporator Cell Sump Conductivity Probe and High Level Alarm has demonstrated a high degree of reliability to perform its credited function. However, there are functionality and maintainability vulnerabilities in the system. Based on the

reasons/discussions stated below, the 242-25H Evaporator Cell Sump Conductivity Probe and High Level Alarm is deemed acceptable to meet its SS requirements:

- The instrument loop periodic testing provides assurance that power is available and that the entire loop including the applicable panel alarm, is functioning properly when the tests are accomplished. The likelihood of relay failure or losing power during the period between these surveillances and at the same time having an event that leaks waste into a cell is highly unlikely.
- A total loss of power resulting in a loss of lighting, multiple indications, and control room instruments will be obvious to operators such that corrective action may be taken. Only a loss of power or electrical signal to a very selective circuit(s) might go undetected.
- In cases where the cell contains an accumulation of liquid waste (not actually contacting the probe) or high humidity, the level sensing relays have demonstrated contact chatter and early failure. With the exception of this vulnerability, these instruments have demonstrated a high degree of reliability to perform its credited function. This vulnerability is judged acceptable because requirements specify that conductivity probe instrument loops be periodically tested. This test demonstrates the operability of all active and passive components of the instrument with the exception of a limited portion of the common return path encompassing the box grounding scheme. Additionally, it verifies that power to the applicable monitored alarm panel and sensing circuits is available.
- The 242-25H Evaporator Cell Sump Conductivity Probe and High Level Alarm is maintained and tested to current SS QA requirements. The system is inspected and tested periodically as part of the Structural Integrity Program, TSRs, maintenance programs, and other facility programs as appropriate.

Table 4.4-1: 242-25H Evaporator Cell Probe System Evaluation

Design Criteria Assessment Matrix 242-25H Evaporator Cell Probe System		
Design Requirements	**Requirement Met**	**Basis/References (Ref. 17)**
1. NPH Resistance	N/A	The 242-25H Evaporator Cell Sump Conductivity Probe and High Level Alarm is not required to be operable during or following any NPH events. Therefore, the NPH Design criterion is not applicable.
2. Equipment Environment Consideration	Yes	The 242-25H Evaporator Cell Sump Conductivity Probe and High Level Alarm components are designed for the industrial environment that they are operating in, and have shown their suitability to this environment by their demonstrated reliability.
3. Functionality	Yes	The 242-25H Evaporator Cell Sump Conductivity Probe and High Level Alarm is used within the original design parameters of the system, however there are vulnerabilities (availability and QA) associated with the system. Based on the compensatory actions given in DSA Addendum Section 4.4.3, the Functionality DR has been satisfied.
4. Test Requirements	Yes	The 242-25H Evaporator Cell Sump Conductivity Probe and High Level Alarm components are capable of being tested.
5. Maintenance Requirements	Yes	The 242-25H Evaporator Cell Sump Conductivity Probe High Level Alarm are capable of being maintained.

5.0 Derivation of Technical Safety Requirements Assessment

5.1 Derivation of Technical Safety Requirements Review

Chapter 5 of the CSTF DSA (Derivation of Technical Safety Requirements) provides summaries and references pertinent sections of the DSA in which Design Features and ACs are needed to prevent or mitigate consequences of an accident. It further provides the necessary level of detail to determine which attributes of the SSCs and administrative features require TSR control. DSA Addendum Table 5.1-1 contains an assessment of the impact (associated with technical issues described in DSA Addendum Section 1.0) that operation of the 242-25H Evaporator has on the CSTF TSR Derivation (including new TSRs required by this DSA Addendum). DSA Addendum Sections 5.2 through 5.7 contain supplemental information addressing how TSR Derivation are impacted by 242-25H Evaporator operation.

Table 5.1-1: Assessment of TSR Derivation Impact

CSTF DSA Section Impacted	Topic	Impact of Leak Sites and the Hydrogen Generation Rate PISA on 242-25H Evaporator Operation Within the DSA
5.3	Technical Safety Requirement Coverage	Information within the DSA is supplemented. Information pertaining to CSTF DSA Table 5.9-1 (Summary of TSRs) is supplemented by new requirements from the DSA Addendum. Analytical uncertainty discussion pertaining to a DSA Addendum nitrite concentration limit is also added. A full assessment is covered in DSA Addendum Section 5.2.
5.4	Derivation of Process Areas/Modes	Information within the DSA is supplemented. A full assessment is covered in DSA Addendum Section 5.3.
5.4.4	Evaporator Modes	Information within the DSA is supplemented to address additional Evaporator Shutdown Mode requirements. A full assessment is covered in DSA Addendum Section 5.3.1.
5.5.1.12	242-16H Evaporator Cell Sump Level (Limiting Condition for Operation [LCO] 3.7.12)	No change to the DSA is required. Although DSA Addendum Section 5.3 modifies the "Mercury Monitoring Systems" (CSTF DSA Section 5.5.6) to the "Evaporator Systems", this DSA section and related LCO will remain as-is until 242-16H Evaporator Cell Sump Level is combined into new LCO 3.6.2 at a future date.
5.5.4.2.19	Sludge Carryover Minimization Program (Specific Administrative Control [SAC] 5.8.2.19)	Information within the DSA is supplemented. A full assessment is covered in DSA Addendum Section 5.4.1.
5.5.4.2.25	Evaporator Feed Qualification Program (SAC 5.8.2.25)	Information within the DSA is supplemented. Elements of the Evaporator Feed Qualification Program are being revised as discussed in DSA Addendum Sections 3.2 and 3.8. Additionally, the 242-25H Evaporator feed tank hydrogen generation rate limits have been modified. A full assessment is covered in DSA Addendum Section 5.4.2.

CSTF DSA Section Impacted	Topic	Impact of Leak Sites and the Hydrogen Generation Rate PISA on 242-25H Evaporator Operation Within the DSA
5.5.4.2.31	Hydrogen Generation Rate Control (SAC 5.8.2.31)	No change to the DSA is required. Although the 242-25H Evaporator Bottoms hydrogen generation rate was updated to account for a thermolytic contribution (discussed in DSA Addendum Section 3.7), 242-25H Evaporator hydrogen generation rate limits are verified by the Evaporator Feed Qualification Program.
5.5.4.2.39	Event Response Program (SAC 5.8.2.39)	Information within the DSA is supplemented. A full assessment is covered in DSA Addendum Section 5.4.3.
5.5.4.2.43	Prohibited Operations (SAC 5.8.2.43)	Information within the DSA is supplemented. A full assessment is covered in DSA Addendum Section 5.4.4.
5.5.4.2.48	Inhalation Dose Potential Control (SAC 5.8.2.51)	Information within the DSA is supplemented. A full assessment is covered in DSA Addendum Sections 5.4.1 and 5.4.5.
5.5.4.2.51	Mercury Management Program	No change to the DSA is required. Operation with leak sites does not impact the Mercury Management Program.
N/A (New SAC)	242-25H Evaporator Cell Salt Evaluation Program	Information within the DSA is supplemented. A SAC for the 242-25H Evaporator Cell Salt Evaluation Program has been added to the TSRs to reflect the revised Evaporator Cell Explosion DBA. A full assessment is covered in DSA Addendum Section 5.4.6.
5.5.5	Minimum Shift Crew	Information within the DSA is supplemented. Minimum Staffing requirements is revised to reflect the modified operator responses. A full assessment is covered in DSA Addendum Section 5.5.
5.5.6.1	Mercury Monitoring Systems Technical Safety Requirement Derivation	No change to the DSA is required. Although DSA Addendum Section 5.6 modifies the “Mercury Monitoring Systems” (CSTF DSA Section 5.5.6) to the “Evaporator Systems”, information in this DSA section is not impacted.
5.6	Design Features	Information within the DSA is supplemented. CSTF DSA Section 5.6 describes information pertaining to design features, vital components, configuration, and component physical arrangement, and states that these are identified on CSTF DSA Table 5.9-1. Information pertaining to these topics is supplemented by DSA Addendum Section 5.7.
Table 5.9-1	Summary of Technical Safety Requirements	Information within the DSA is supplemented. Information pertaining to CSTF DSA Table 5.9-1 (Summary of TSRs) is supplemented by new requirements from the DSA Addendum (as discussed in previous DSA Addendum sections). A full assessment is covered in DSA Addendum Section 5.7.

CSTF DSA Section Impacted	Topic	Impact of Leak Sites and the Hydrogen Generation Rate PISA on 242-25H Evaporator Operation Within the DSA
N/A (New LCO)	Evaporator Cell Sumps (LCO 3.6.2)	Information within the DSA is supplemented. An LCO for the 242-25H Evaporator Cell Sump (level and leak detection instrumentation) has been added to the TSRs to reflect the revised Evaporator Cell Explosion DBA. A full assessment is covered in DSA Addendum Section 5.6.2.
N/A (New LCO)	Evaporator Cell Ventilation System (LCO 3.6.3)	Information within the DSA is supplemented. An LCO for the 242-25H Evaporator Cell Ventilation System (242-25H Evaporator PVS) has been added to the TSRs to reflect the revised Evaporator Cell Explosion DBA. A full assessment is covered in DSA Addendum Section 5.6.3.
N/A (New LCO)	Evaporator Cell Portable Ventilation Equipment (LCO 3.6.4)	Information within the DSA is supplemented. An LCO for the 242-25H Evaporator Cell Portable Ventilation Equipment has been added to the TSRs to reflect the revised Evaporator Cell Explosion DBA. A full assessment is covered in DSA Addendum Section 5.6.4.

5.2 Technical Safety Requirement Coverage

In addition to the TSR coverage discussion provided in CSTF DSA Section 5.3 and CSTF DSA Table 5.9-1, DSA Addendum Table 5.7-1 provides additional system listings of the safety equipment and features that the DSA Addendum modifies or requires. The CSTF DSA Table 5.9-1 data not included in DSA Addendum Table 5.7-1 remains valid.

CSTF DSA Section 5.3 also provides a listing of requirements that do not require application of analytical uncertainty (with associated basis). In addition to this list, the following item does not require application of analytical uncertainty when performing comparison against the limit:

- Evaporator Feed Qualification Program (242-25H Evaporator feed tank supernate nitrite concentration) – Derivation of the safety analysis value and limit accounted for analytical uncertainty. Thus, use of nominal values is acceptable and does not need to include additional analytical uncertainty.

5.3 Derivation of Process Areas/Modes

As discussed in DSA Addendum Section 5.6, the "Mercury Monitoring Systems" (CSTF DSA Section 5.5.6) have been changed to the "Evaporator Systems" and TSR Series 3.6 covers related LCOs.

5.3.1 Evaporator Modes Derivation

The derivation of the Modes (and associated requirements) in the CSTF DSA for the Evaporator Process Areas was based on mercury monitoring and associated mercury inventory limits. These requirements (as stated) also provide basis for deriving sufficient Mode applicability with new 242-25H Evaporator LCOs (discussed in DSA Addendum Sections 5.6.2, 5.6.3, and 5.6.4) associated with evaporator cell flammability concerns.

However, additional requirements were necessary to ensure the 242-25H Evaporator pot and cell did not contain quantities of radioactive waste that pose a flammability concern in the cell (if the pot material leaked into the evaporator cell).

Reference 8 evaluated various 242-25H Evaporator Cell conditions and associated percent LFL results. Assuming the following conditions for the 242-25H Evaporator (pot and cell), the resulting equilibrium hydrogen concentration would be less than or equal to 60% of the LFL (considering only the effects of atmospheric breathing) even if the entire contents of the pot were spilled into the cell (Ref. 8):

- Evaporator cell sump is full of waste (118 gallons). This value is protected by a new Evaporator Shutdown Mode requirement (discussed below).
- Evaporator cell has 1,000 gallons of saltcake in the cell. This value is protected by 242-25H Evaporator Cell Salt Evaluation Program (discussed in DSA Addendum Sections 3.8 and 5.4.6).
- Evaporator pot contents available to be leaked to cell are under the following conditions:
    - Indicated pot liquid level is less than or equal to 110 inches. This indicated pot liquid level equates to a total liquid volume of 11,265 gallons. This value is protected by a new Evaporator Shutdown Mode requirement (discussed below).
        - 2,100 gallons of the available 11,265-gallon volume is waste (242-25H Evaporator Bottoms). An indicated level of 1 inch in the 242-25H Evaporator, corresponds to a volume of less than 2,100 gallons. This value is protected by a new Evaporator Shutdown Mode requirement (discussed below). This value is also protected by the following existing Shutdown Mode requirement (discussed in CSTF DSA Section 5.4.4):
            - Waste feed to the evaporator shall be isolated.
        - 9,165 gallons of the available 11,265-gallon volume is water/chemicals (e.g., inhibited water). This value is protected by a new Evaporator Shutdown Mode requirement (discussed below).
    - Evaporator pot contents are less than or equal to 100°C. This value is protected by the following existing Shutdown Mode requirements (discussed in CSTF DSA Section 5.4.4):
        - Steam to the tube bundle and lance shall be isolated.
        - Evaporator pot liquid temperature shall be less than or equal to 90°C.
- Contribution of organics to the LFL are less than or equal to 5% of the hydrogen LFL.

Based on the previous discussion, the following additional requirements shall be defined as part of the Evaporator Shutdown Mode description in CSTF DSA Section 5.4.4:

- Waste level in the 242-25H Evaporator pot shall be less than or equal to 1 inch (indicated level).

  After entry into Shutdown Mode, water/chemical additions (e.g., inhibited water) are allowed up to a maximum liquid level of less than or equal to 110 inches (indicated level) in the 242-25H Evaporator pot.

- Waste level in the 242-25H Evaporator Cell sump shall be less than or equal to 22 inches (inches above cell sump floor).

  After entry into Shutdown Mode, liquid level in the 242-25H Evaporator Cell sump may exceed 22 inches (inches above cell sump floor).

The Evaporator Shutdown Mode requirements (described above) ensure the 242-25H Evaporator pot and cell do not contain quantities of radioactive waste that pose a flammability concern in the cell (if the pot material leaked into the evaporator cell). Additional discussion is provided in DSA Addendum Section 5.6 for the basis associated with 242-25H Evaporator LCOs and Process Area Mode applicability.

5.4 Facility Administrative Controls

As discussed in previous DSA Addendum subsections, ACs (new or revised) are required based on the hazard and accident analysis. The following subsections detail these requirements and this information is also annotated on DSA Addendum Table 5.7-1.

5.4.1 Sludge Carryover Minimization Program (Specific Administrative Control 5.8.2.19)

CSTF DSA Sections 5.5.4.2.19 and 5.5.4.2.48 describe that the Sludge Carryover Minimization Program protects the bounding initial assumption regarding a maximum 1 weight percent (wt. %) sludge solids (carryover) for evaporator feed/bottoms. However, as discussed in DSA Addendum Section 5.4.5, requirements protecting the inhalation dose potential limit of 242-25H Evaporator Bottoms have changed. DSA Addendum Section 5.4.5 states that the Inhalation Dose Potential Control Program must protect the inhalation dose potential limit for 242-25H Evaporator Bottoms (and associated feed). If 1 wt. % sludge solids carryover will protect the associated limit for 242-25H Evaporator Bottoms and feed (as determined by engineering evaluation), then the Sludge Carryover Minimization Program requirements may be used for protecting the sludge solids content. However, if the engineering evaluation requires less than 1 wt. % sludge solids for meeting the inhalation dose potential limit, then additional requirements (as discussed in DSA Addendum Section 5.4.5) are necessary.

5.4.2 Evaporator Feed Qualification Program (Specific Administrative Control 5.8.2.25)

The Evaporator Feed Qualification Program (CSTF DSA Section 5.5.4.2.25) is supplemented to add the following requirement as a SAC:

- Prior to providing waste feed to the 242-25H Evaporator, ensure that the supernate nitrite concentration in the feed tank is greater than or equal to 0.0275 M.

The minimum nitrite concentration in waste tank supernate shall be maintained greater than or equal to 0.0275 M (this value accounts for analytical uncertainty) to effectively eliminate the corrosion, radiolysis of organics, and catalyst mechanism as flammability concerns, as discussed in DSA Addendum Sections 3.2 and 3.8. This SAC serves an SC function and protects a bounding initial assumption. This program was designated a SAC due to the variety of requirements, which cannot be accomplished using an engineered safety system.

Activities required by this SAC are considered to be routine tasks and are governed by existing procedures. Sample results are independently reviewed. This ensures that the safety function of the SAC is met. Laboratory QA practices and sample analysis protocols, as described in CSTF DSA Section 5.5.4.2.7, ensure the validity of associated sample results.

The Evaporator Feed Qualification Program (CSTF DSA Section 5.5.4.2.25) also ensures the composition of waste in the 242-25H Evaporator feed tank complies with the hydrogen generation rate limits prior to transfer to the evaporator pot, and refers to CSTF DSA Section 3.4.1.5.5. However, as discussed in DSA Addendum Section 3.7, the hydrogen generation rate limit (1.5E-05 ft^3/gal-hr) for 242-25H Evaporator has been updated, and this value shall be used for compliance.

5.4.3 Event Response Program (Specific Administrative Control 5.8.2.39)

The Event Response Program (CSTF DSA Section 5.5.4.2.39) is supplemented to add the following requirement as a SAC as part of the Seismic event actions:

- Event Response Procedures shall be in place governing required actions following a Seismic event. These procedures shall require the following operator actions:
    1) Shut down the 242-25H Evaporator (secure steam to tube bundle and lance) and secure evaporator feed pump. [Note: This action is already stated in the Event Response Program in the existing CSTF DSA, but is shown here for completeness and consistency with DSA Addendum Sections 3.10 and 3.13.]
    2) Restore the 242-25H Evaporator PVS or install/operate a portable ventilation system on the 242-25H Evaporator Cell, based on the time to LFL.

The bounding time to LFL will be no less than 24 hours (Ref. 8), but the actual time to LFL could be greater than 24 hours based on the post-seismic facility conditions (e.g., whether a leak into the evaporator cell occurred).

This SAC is credited as a first level of control to prevent the 242-25H Evaporator Cell Explosion (seismic scenario), as discussed in DSA Addendum Section 3.10. This SAC serves an SS function. This program was designated a SAC because the upgrades required to qualify/upgrade associated equipment were deemed cost-prohibitive.

Portable ventilation equipment is required to perform the safety function of this SAC. This equipment (including operability) is covered by LCO 3.6.4 (DSA Addendum Section 5.6.4). Additionally, portions of the 242-25H Evaporator PVS are required to perform this SAC, as described in DSA Addendum Section 4.3. SAC attributes associated with shutting down the evaporator are covered by CSTF DSA Section 5.5.4.2.39 (DSA Addendum does not alter this information).

5.4.4 Prohibited Operations (Specific Administrative Control 5.8.2.43)

As discussed in DSA Addendum Sections 3.4, an additional SAC (Prohibited Operation) is required for the 242-25H Evaporator. The Prohibited Operations (CSTF DSA Section 5.5.4.2.43) is supplemented to add the following requirement as a SAC:

- Antifoam additions to the 242-25H Evaporator are prohibited.

This SAC relies on the USQ process to implement this prohibition and ensure that the safety function of this SAC is met.

5.4.5 Inhalation Dose Potential Control (Specific Administrative Control 5.8.2.51)

CSTF DSA Section 5.5.4.2.48 states the following regarding protecting evaporator feed/bottoms inhalation dose potential limits:

> The inhalation dose potential of waste transferred to the evaporators shall be less than or equal to 3.3E+07 rem/gal (242-16H) and 3.7E+07 rem/gal (242-25H) to protect the analyzed consequences. Ensuring that sludge solids carryover does not occur (maximum 1 wt. % sludge) as discussed in Section 5.5.4.2.19 ensures compliance with the evaporator feed/bottoms inhalation dose potential.

As discussed in DSA Addendum Section 3.3, the 242-25H Evaporator Bottoms waste stream and associated inhalation dose potential have been updated. Based on this change to the waste stream definition, protecting 1 wt. % sludge solids (via the Sludge Carryover Minimization Program) does not necessarily ensure compliance with the revised 242-25H Evaporator Bottoms inhalation dose potential limit (1.85E+07 rem/gal). Therefore, an engineering evaluation will be required to ensure compliance with the inhalation dose potential limit for 242-25H Evaporator Bottoms (and associated feed).

If 1 wt. % sludge solids carryover will protect the associated limit for 242-25H Evaporator Bottoms and feed (as determined by engineering evaluation), then the Sludge Carryover Minimization Program requirements may be used for protecting the sludge solids content and inhalation dose potential. However, if the engineering evaluation requires less than 1 wt. % sludge solids for meeting the inhalation dose potential limit, then additional requirements (as determined by the engineering evaluation) shall be

implemented. Examples of information that may be used within the engineering evaluation include (but are not limited to):

- Actual pump/solids level of re-entrainment
- Actual Ci/g in solids (with 2 sigma uncertainty) (e.g., sludge batch qualification results used to characterize the solids in sludge batch wash water)
- Sample results – used to determine actual solids wt. % at needed locations
- Presence of saltcake with respect to sludge (e.g., if the pump is located within the saltcake, then the saltcake may act as a barrier to entrained sludge solids within the supernatant)
- Settling time since the last transfer into the tank

SAC attributes associated with Inhalation Dose Potential Control are covered by CSTF DSA Section 5.5.4.2.48 (DSA Addendum does not alter this information).

5.4.6 242-25H Evaporator Cell Salt Evaluation Program (Specific Administrative Control 5.8.2.56)

As discussed in DSA Addendum Sections 3.4, 3.8, and 3.10, an additional SAC is required for the 242-25H Evaporator Cell Salt Evaluation Program. As this is a new SAC, there is no corresponding CSTF DSA section to supplement. However, the following subsections provide information typically found in CSTF DSA Chapter 5 for SACs.

5.4.6.1 Safety Function

The safety function of the 242-25H Evaporator Cell Salt Evaluation Program is to ensure that the volume of accumulated salt in the evaporator cell does not exceed established limits, to protect flammability initial condition assumptions of the accident analyses.

The 242-25H Evaporator Cell Salt Evaluation Program is credited as a barrier to Criticality (DSA Addendum Section 6.2.3) and as a bounding initial condition (DSA Addendum Section 3.10).

5.4.6.2 SAC Description

The 242-25H Evaporator Cell shall be inspected (including evaluation/documentation of the inspection results) at least once every 2,160 hours (90 days) of evaporator operation for the presence of salt. If inspection results indicate a total volume of accumulated salt greater than 1,000 gallons (protected by TSR limit of 700 gallons), then the evaporator shall be shut down immediately (secure feed pump and secure steam to tube bundle and lance) and not restarted until the salt volume is reduced below limits.

The methodology for estimating accumulated salt volume shall be determined by Engineering. 242-25H Evaporator operation is considered to be the amount of time steam is supplied to the tube bundle.

This control was designated as a SAC because it cannot be performed by an engineered safety system.

Conservatisms that protect the safety function of this SAC include the following: the inspection frequency has sufficient margin based on anticipated leak rates; the TSR limit (700 gallons) is significantly below the safety analysis value (1,000 gallons); and the methodology for estimating salt volume will have sufficient margin to account for uncertainty by making conservative assumptions.

5.4.6.3 Functional Requirements

Inspection, calculations, and 242-25H Evaporator shutdown, required by this SAC are considered to be routine tasks and are governed by existing procedures.

5.4.6.4 SAC Evaluation

The salt inspection results and the salt volume calculation are independently verified. This ensures that the safety function of the SAC is met.

5.5 Minimum Shift Crew

The minimum shift crew defined in the DSA and TSR is based on Reference 18, which evaluated the various aspects for operator actions and response and derived the minimum shift crew required. As part of this evaluation, Reference 18 defined Operational Conditions for the purposes of determining the minimum required operators, and stated the following as an Operational Condition for evaporator operation:

> Evaporator operation (recycle transfer is part of evaporator operation and need not be counted as an additional Operational Condition if the evaporator is operating during the recycle transfer)

As discussed in DSA Addendum Section 3.10, the Event Response Program is credited as the first level of control for the 242-25H Evaporator Cell Explosion (seismic leak scenario). Operator response will be to restore ventilation or install/operate a portable ventilation system based on the time to LFL. The bounding time to LFL will be no less than 24 hours (Ref. 8), but the actual time to LFL could be greater than 24 hours based on the post-seismic facility conditions (e.g., whether a leak into the evaporator cell occurred). Additional operator response will be to shut down the evaporator (secure steam to tube bundle and lance) and secure the evaporator feed pump.

Event Response actions associated with securing the evaporator feed pump and shutting down the evaporator have credited response times that have already been accounted for in Reference 18. However, Event Response actions associated with restoring ventilation or installing/operating portable ventilation system on the 242-25H Evaporator Cell require further evaluation. Based on the seismic leak scenario for the 242-25H Evaporator Cell Explosion, the cell can become flammable in approximately 24 hours (Ref. 8). Due to this limited time for completion of this action, operation of the 242-25H Evaporator needs additional consideration for the minimum required operators and related Operational Condition for evaporator operation.

Therefore, the Operational Condition for evaporator operation is re-defined as follows:

> Evaporator operation shall be counted as follows (recycle transfer is part of evaporator operation and need not be counted as an additional Operational Condition if the evaporator is operating during the recycle transfer):
>
> a. 242-16H Evaporator operation shall be counted as one Operational Condition
>
> b. 242-25H Evaporator operation shall be counted as two Operational Conditions

5.6 Mercury Monitoring and Evaporator Systems Technical Safety Requirement Derivation

CSTF DSA Section 5.5.6 (and related TSR 3.6 Series LCO) describes the mercury monitoring requirements associated with the evaporators. For this DSA Addendum, this section and related TSR LCOs is broadened to cover other 242-25H Evaporator LCOs (TSR Series 3.6 title changed to Evaporator Systems). Additionally, new LCOs covered in DSA Addendum Sections 5.6.2, 5.6.3, and 5.6.4 follow the structure and content of LCO derivation in CSTF DSA Chapter 5.

5.6.1 Evaporator Mercury Inventory (Limiting Condition for Operation 3.6.1)

This LCO covers both 242-16H and 242-25H Evaporators, and the only change related to this LCO is that the TSR Series 3.6 title is changed to Evaporator Systems. Changes associated with the 242-25H Evaporator Shutdown Mode (described in DSA Addendum Section 5.3) have no impact on LCO 3.6.1 or the LCO derivation.

5.6.2 Evaporator Cell Sumps (Limiting Condition for Operation 3.6.2)

DSA Addendum Section 3.0 credits 242-25H Evaporator Cell sump leak detection for mitigating the 242-25H Evaporator Cell Explosion event. In addition, the sump leak detection (in conjunction with the 242-25H Evaporator Cell Salt Evaluation Program) is used to protect the initial hydrogen concentration used in the 242-25H Evaporator Cell Explosion scenario. Therefore, this LCO requires the evaporator cell sump conductivity probe and associated control room alarm to be operable with a setpoint less than or equal to the level corresponding to the required safety analysis value, adjusted for instrument uncertainty.

The amount of waste in the evaporator cell sump is limited to the available volume of the sump structure (including the cell gutter volume). This amount is based on maintaining the waste inventory assumptions of the accident analysis. This value (in conjunction with the 242-25H Evaporator Cell Salt Evaluation Program) maintains the hydrogen concentration in the evaporator cell less than or equal to 25% of the LFL. This assumes that the waste present in the sump and the maximum salt waste present in the cell (1,000 gallons per the 242-25H Evaporator Cell Salt Evaluation Program) contribute to the hydrogen generation rate (considering the effects of atmospheric breathing) (Ref. 8). This value is also considered sufficient to allow for leak detection during analyzed 242-25H Evaporator System non-seismic leak scenarios.

The leak detection instrumentation is performing its intended function when liquid in the evaporator cell sump can be identified to the control room such that appropriate actions can be taken. Time delay relays (less than or equal to 60 seconds) are permitted on the alarm actuation circuits. The control room alarm for the evaporator cell sump conductivity probe must provide both audible and visual indications of the alarm condition. Satisfactory placement of the credited conductivity probe is a requirement for the establishment of leak detection instrumentation operability.

This LCO is applicable any time the 242-25H Evaporator is receiving or contains quantities of radioactive waste that could leak a sufficient amount into the evaporator cell to pose a flammability concern in the cell. These activities and associated conditions are only allowed in Operation Mode (see additional discussion in DSA Addendum Section 5.3). However, when at least one cell cover is removed from the evaporator cell, flammable vapor accumulation is no longer a concern. Therefore, this LCO is applicable in Operation Mode while all evaporator cell covers are installed.

In the event the waste level in a 242-25H Evaporator Cell sump is greater than the level corresponding to the safety analysis residual volume, the actions listed below shall be taken:

1. Ensure forced ventilation is operating on the 242-25H Evaporator Cell (and verified periodically until waste level is restored). Forced ventilation shall be provided to the 242-25H Evaporator Cell within the minimum assumed time to LFL for analyzed 242-25H Evaporator System non-seismic leak scenarios.
2. Ensure that the waste level in the 242-25H Evaporator Cell sump is less than or equal to the level corresponding to the safety analysis residual volume (adjusted for uncertainty). This action shall be taken in a timely manner to minimize the amount of hydrogen allowed to accumulate in the evaporator cell.

If actions to restore the cell sump waste level cannot be completed (or ventilation is not operating per Action 1 above), then the actions listed below shall be taken:

1. Immediately isolate steam to the tube bundle and lance. This action minimizes thermolytic hydrogen generation from the waste should the evaporator pot contents leak to the evaporator cell.
2. Immediately stop waste feed to the evaporator pot. This action minimizes the amount of additional hydrogen-generating waste available to leak into the evaporator cell.
3. Ensure forced ventilation is operating on the 242-25H Evaporator Cell or verify hydrogen concentration is less than or equal to 25% of the LFL (adjusted for instrument uncertainty). This action shall be performed within the minimum assumed time to LFL for analyzed 242-25H Evaporator System non-seismic leak scenarios. Because the evaporator has been shutdown (by previous actions), temporary transients in excess of 25% of the LFL are acceptable provided that the hydrogen concentration is demonstrated to be below 25% of the LFL within the designated periodicity of the TSR.

4. Reduce waste level in the evaporator pot (approximate minimal indicated level). This action minimizes the amount of additional hydrogen-generating waste available to leak into the evaporator cell. The completion time for this action shall minimize the time during which additional waste may remain in the evaporator pot, but also allow sufficient time to complete lifting/transferring the pot contents.

In the event that the 242-25H Evaporator Cell sump leak detection instrumentation is inoperable, actions shall be taken to verify that the waste level in the 242-25H Evaporator Cell sump is less than or equal to the level corresponding to the safety analysis residual volume (adjusted for uncertainty). This action shall be taken in a timely manner (and verified periodically until the equipment is restored) to minimize the amount of hydrogen allowed to accumulate in the evaporator cell.

5.6.2.1 Instrument Loop Test of Evaporator Cell Sump Conductivity Probe (Surveillance Requirement 4.6.2.1)

Performance of an instrument loop test on the required conductivity probe ensures that the instrument is capable of detecting a high level condition and annunciating in the applicable control room. The instrument loop test verifies the operability of the entire instrument loop (e.g., conductivity probe and associated circuitry and control room alarm) with the exception of a limited portion of the common return path encompassing the grounding scheme. This SR shall be performed on a routine basis to ensure that the conductivity probe is maintained in an operable state.

5.6.2.2 Verification of Sump Conductivity Probe Height (Surveillance Requirement 4.6.2.2)

The evaporator cell sump conductivity probe setpoint ensures that operators take action to mitigate the release within the assumptions of the analysis. Therefore, the conductivity probe is verified to be set at, or below, the maximum calculated level setpoint (including uncertainty). The surveillance frequency shall be based on operational experience and engineering judgment and considered adequate to monitor adverse trends in instrumentation performance.

5.6.3 Evaporator Cell Ventilation System (Limiting Condition for Operation 3.6.3)

DSA Addendum Section 3.0 credits evaporator cell ventilation to prevent a 242-25H Evaporator Cell Explosion. The 242-25H Evaporator Cell Active Ventilation System shall provide a minimum flow through the 242-25H Evaporator Cell to prevent accumulation of a flammable mixture of hydrogen in the evaporator cell, thereby preventing an explosion.

An actual purge flow rate of at least 50 scfm through the 242-25H Evaporator Cell maintains the concentration of flammable vapors in the cell bulk vapor space to less than or equal to 25% of the LFL during analyzed 242-25H Evaporator System non-seismic leak scenarios, accounting for radiolytic and thermolytic hydrogen generation (Ref. 8). The 242-25H Evaporator PVS shall provide at least 50-scfm actual flow rate (no flow indication required) to ensure this safety function is met.

This LCO requires that the 242-25H Evaporator PVS be operable. To be operable, the ventilation system requires an operating fan generating the required purge flow through the system and an intact flow path (e.g., ductwork, filter housing) from the evaporator cell to the fan.

This LCO is applicable whenever the 242-25H Evaporator Cell requires forced ventilation to maintain the cell's bulk vapor space within assumed flammability conditions. This LCO is applicable any time the 242-25H Evaporator is receiving or contains quantities of radioactive waste that could leak a sufficient amount into the evaporator cell to pose a flammability concern in the cell. These activities and associated conditions are only allowed in Operation Mode (see additional discussion in DSA Addendum Section 5.3). However, when at least one cell cover is removed from the evaporator cell, flammable vapor accumulation is no longer a concern. Therefore, this LCO is applicable in Operation Mode while all evaporator cell covers are installed.

In the event the 242-25H Evaporator PVS is inoperable, the actions listed below shall be taken:

1. Ensure forced ventilation is operating on the 242-25H Evaporator Cell (and verified periodically until cell ventilation is restored). Forced ventilation shall be provided to the 242-25H Evaporator Cell within the minimum assumed time to LFL for analyzed 242-25H Evaporator System non-seismic leak scenarios.
2. Restore the 242-25H Evaporator PVS to operable status.

As part of restoring the 242-25H Evaporator PVS to operable status, continuous ventilation flow shall be supplied to the evaporator cell for a sufficient duration to perform 12 vapor space turnovers (unless the cell vapor space hydrogen concentration is determined to be less than or equal to 25% of the LFL, adjusted for instrument uncertainty). Reference 8 determines the time to an organics-adjusted LFL, and thus organics need not be accounted for in the vapor space concentration verification. This action shall be completed prior to exiting the LCO Condition (ventilation system inoperable). From Reference 19, 12 vapor space turnovers ensures that the flammable vapor concentration is "reset" to the conditions used in the safety analysis (i.e., flammable vapor concentration is less than or equal to 25% of the LFL). This will ensure that the calculated times to LFL are valid. Nominal ventilation flow values (i.e., flows not corrected for instrument uncertainty) may be used when determining the ventilation run time necessary to provide the 12 vapor space turnovers. To ensure the flammable vapor concentration is adequately "reset" within the evaporator cell, consideration shall be given to the shared vapor space with the overheads condenser cell and gravity drain line cell. The use of nominal values for this application is justified considering it only takes approximately seven vapor space turnovers (assuming a mixing efficiency of 0.2) to reduce hydrogen concentration from 100% to 25% of the LFL (Ref. 19). The mixing efficiency of 0.2 is based on the recommended value from National Fire Protection Association (NFPA) 69 (Ref. 20) Annex D for the ventilation system arrangement (single exhaust opening, non-positive supply ventilation system).

If actions to restore forced ventilation cannot be completed, then the actions listed below shall be taken:

1. Immediately isolate steam to the tube bundle and lance. This action minimizes thermolytic hydrogen generation from the waste should the evaporator pot contents leak to the evaporator cell.
2. Immediately stop waste feed to the evaporator pot. This action minimizes the amount of additional hydrogen-generating waste available to leak into the evaporator cell.
3. Ensure forced ventilation is operating on the 242-25H Evaporator Cell or verify hydrogen concentration is less than or equal to 25% of the LFL (adjusted for instrument uncertainty). This action shall be performed within the minimum assumed time to LFL for analyzed 242-25H Evaporator System non-seismic leak scenarios. Because the evaporator has been shutdown (by previous actions), temporary transients in excess of 25% of the LFL are acceptable provided that the hydrogen concentration is demonstrated to be below 25% of the LFL within the designated periodicity of the TSR.
4. Reduce waste level in the evaporator pot (approximate minimal indicated level). This action minimizes the amount of additional hydrogen-generating waste available to leak into the evaporator cell. The completion time for this action shall minimize the time during which additional waste may remain in the evaporator pot, but also allow sufficient time to complete lifting/transferring the pot contents.

5.6.3.1 Ventilation Verification (Surveillance Requirement 4.6.3.1)

Since LCO 3.6.3 requires ventilation system to be operable, verification on a routine basis is required. This surveillance shall verify the exhaust fan is operating and aligned to the evaporator cell. This surveillance shall be accomplished by visual and/or audible inspection that the exhaust fan is operating to ventilate the evaporator cell. Verifying that the fan is aligned to the evaporator cell may be performed based on inspection of damper alignment or observation of local system parameters (e.g., exhaust flow). The frequency of the surveillance shall ensure that there is adequate time to respond to a loss of evaporator cell vapor space purge flow.

5.6.3.2 Exhaust Fan Capacity Verification (Surveillance Requirement 4.6.3.2)

Since LCO 3.6.3 requires a minimum evaporator cell ventilation flow rate, verification of the exhaust fan capacity on a periodic basis is required. The minimum flow required to be verified is 50 scfm. This surveillance shall be accomplished by reading and recording the measured flow rate using either installed flow instrumentation or Measuring and Test Equipment and accounting for uncertainty. The frequency of the surveillance shall be based on operational experience and engineering judgment and considered adequate to monitor adverse trends in equipment performance.

5.6.4 Evaporator Cell Portable Ventilation Equipment (Limiting Condition for Operation 3.6.4)

DSA Addendum Section 3.0 credits the availability of Portable Ventilation Equipment to prevent a 242-25H Evaporator Cell explosion (following a Seismic Event). If the normal ventilation system is inoperable on the 242-25H Evaporator Cell, Portable Ventilation Equipment can be placed in service. The function of the Portable Ventilation Equipment is to provide emergency exhaust flow to prevent the buildup of flammable vapors to LFL conditions. The equipment is portable and may be hand-carried to the 242-25H Evaporator Building in the event that the normal ventilation system fails and cannot be restored within the necessary time requirements. The Portable Ventilation Equipment is self-contained and does not rely on any site or facility utilities to accomplish the intended safety function. No fuel inventory/storage requirements are necessary for the Portable Ventilation Unit, as it is judged that sufficient fuel can be obtained following an initiating event.

The Portable Ventilation Unit consists of a blower assembly, generator, PVS backup manifold, flexible hose, and flexible duct section. The blower assembly draws suction from the evaporator cell bulk vapor space, pulls the flow through a HEPA filter, and exhausts the gases to atmosphere. In addition to the blower assembly, the unit has a generator to provide power. The PVS backup manifold, flexible hose, and the flexible duct section allow the blower assembly to be connected to the PVS HEPA filter unit housing. Although the PVS backup manifold and PVS HEPA filter unit housing have multiple connection points for flexible hoses, only one flexible hose is required to provide at least 50-scfm flow rate (Ref. 26). Additionally, the unit typically has a HEPA filter, although the filter is not required safety-related equipment.

The Evaporator Cell Portable Ventilation Equipment is required following a seismic event and is stored in a designated seismically qualified structure.

The safety analysis credits forced ventilation on the 242-25H Evaporator Cell with providing sufficient purge flow rate through the cell to maintain the cell's bulk vapor space below flammable conditions. Requiring a dedicated Portable Ventilation Unit ensures that forced ventilation capabilities will be available for use on the 242-25H Evaporator Cell following a Seismic Event.

This LCO requires the Evaporator Cell Portable Ventilation Equipment stated in the LCO to be operable. For a Portable Ventilation Unit to be considered operable, it must have the equipment necessary for operation as stated in the LCO and the equipment must be stored in the required designated storage location. The components shall be properly stored such that they are available following a seismic event (e.g., component in proper storage rack with associated restraints fastened). Also for the blower assembly and generator to be considered operable, they must be capable of starting and the blower assembly must be capable of providing flow. The blower assembly does not have a specific flowrate test requirement. Based on engineering judgment, the nominal flow capacities of these portable blowers are significantly greater than the required flow for the 242-25H Evaporator Cell (post-seismic flowrate requirements) and will provide adequate flow.

This LCO is applicable whenever the 242-25H Evaporator Cell requires forced ventilation to maintain the cell's bulk vapor space within assumed flammability conditions. This LCO is applicable any time the 242-25H Evaporator is receiving or contains quantities of radioactive waste that could leak a sufficient amount into the evaporator cell to pose a flammability concern in the cell. These activities and associated conditions are only allowed in Operation Mode (see additional discussion in DSA Addendum Section 5.3). However, when at least one cell cover is removed from the evaporator cell, flammable vapor accumulation is no longer a concern. Therefore, this LCO is applicable in Operation Mode while all evaporator cell covers are installed.

When a required component for the Portable Ventilation Unit is inoperable, actions shall be taken to restore the inoperable equipment. The completion time shall limit the period during which the Portable Ventilation Unit is allowed to be in a degraded condition. The completion time shall be based on engineering judgment and operational experience and provide sufficient time to perform necessary repair/replacement of the unit.

If actions to restore the inoperable equipment cannot be completed, then the actions listed below shall be taken:

1. Immediately isolate steam to the tube bundle and lance. This action minimizes thermolytic hydrogen generation from the waste should the evaporator pot contents leak to the evaporator cell.
2. Immediately stop waste feed to the evaporator pot. This action minimizes the amount of additional hydrogen-generating waste available to leak into the evaporator cell.
3. Reduce waste level in the evaporator pot (approximate minimal indicated level). This action minimizes the amount of additional hydrogen-generating waste available to leak into the evaporator cell. The completion time for this action shall minimize the time during which additional waste may remain in the evaporator pot, but also allow sufficient time to complete lifting/transferring the pot contents.

5.6.4.1 Portable Ventilation Operability Verification (Surveillance Requirement 4.6.4.1)

Verifying that the portable ventilation blower assembly and generator can be started ensures that the Portable Ventilation Unit is capable of performing an air sweep in the evaporator cell vapor space to prevent the buildup of flammable vapors. The surveillance frequency shall be based on engineering judgment and shall be adequate to ensure the operability of the equipment.

5.6.4.2 Portable Ventilation Component Visual Inspection (Surveillance Requirement 4.6.4.2)

Performing a visual inspection of the Evaporator Cell Portable Ventilation Equipment required components ensures that the required components are:

- Free from significant physical damage (i.e., damage that would preclude the component from performing its intended safety function).

- Located in the required designated storage location.
- Stored correctly to ensure availability following a seismic event (e.g., component in proper storage rack with associated restraints fastened).

The surveillance frequency shall be based on engineering judgment and shall be adequate to ensure the operability of the equipment.

5.7 Summary of Technical Safety Requirements

Information pertaining to CSTF DSA Table 5.9-1 (Summary of TSRs) is supplemented by new requirements from the DSA Addendum (as discussed in previous DSA Addendum sections). DSA Addendum Table 5.7-1 provides additional system listings of the safety equipment and features that the DSA Addendum modifies or requires. The CSTF DSA Table 5.9-1 data not included in DSA Addendum Table 5.7-1 remains valid.

Table 5.7-1: Updated Summary of Technical Safety Requirements

PROCESS AREA:	EVAPORATORS		
SSCs / ACs	**Functional Classification [(a)]**	**DSA Addendum Analysis Section(s)**	**Operational Limits TSR**
242-25H Evaporator Cell Sump Conductivity Probe and Control Room Alarm	SS	3.10 3.13 Table 2.3-4 4.4	LCO 3.6.2
242-25H Evaporator Primary Ventilation System	SS	3.10 Table 2.3-4 4.3	LCO 3.6.3 LCO 3.6.4
Design Feature – 242-25H Evaporator Cell	SC	3.10 3.12 3.13 3.14 Table 2.3-4 4.2	TSR Section 6.0
Administrative Control – Emergency Response Program	SS	3.10 3.12 3.13 3.14 Table 2.3-4	AC 5.8.2.2
Administrative Control – Severe Weather Response Program	SS	3.12	AC 5.8.2.24
Administrative Control – Evaporator Feed Qualification Program	SS	3.8 3.9 3.10 3.12 3.13	AC 5.8.2.25

Administrative Control – Event Response Program	SS	3.10 3.13 3.14 Table 2.3-4	AC 5.8.2.39
Administrative Control – 242-25H Evaporator Cell Salt Evaluation Program	SS	3.8 3.10 3.13 Table 2.3-4	AC 5.8.2.56

Notes:

(a) Although Administrative Programs are not functionally classified, they are denoted as SC or SS according to the highest classification of the function they perform for the specific event. SC/SS is only denoted when classification varies depending upon process area.

6.0 Prevention of Inadvertent Criticality Assessment

6.1 Prevention of Inadvertent Criticality Review

Chapter 6 of the CSTF DSA (Prevention of Inadvertent Criticality) describes the Nuclear Criticality Safety provisions for the CSTF. DSA Addendum Table 6.1-1 contains an assessment of the impact (associated with technical issues described in DSA Addendum Section 1.0) that operation of the 242-25H Evaporator has on Criticality Safety. DSA Addendum Section 6.2 contains DSA supplemental information addressing Criticality Safety changes resulting from 242-25H Evaporator operation.

Table 6.1-1: Assessment of DSA Chapter 6 Impact

CSTF DSA Section Impacted	Topic	Impact of Leak Sites and the Hydrogen Generation Rate PISA on 242-25H Evaporator Operation Within the DSA
6.3.1/6.4.1	Waste Storage	Information within the DSA is supplemented. The description of waste storage does not address the salt formed from the 242-25H Evaporator leak sites. A full assessment of leaked salt formation and dissolution is covered in DSA Addendum Section 6.2.
6.3.3/6.4.2	Saltcake Dissolution	Information within the DSA is supplemented. The description of saltcake dissolution does not address the salt formed from the 242-25H Evaporator leak sites being dissolved. A full assessment of leaked salt formation and dissolution is covered in DSA Addendum Section 6.2.
6.3.4/6.4.3	Waste Evaporation	No change to the DSA is required. Operating the 242-25H Evaporator with leak sites does not impact the criticality safety of the evaporation process.
6.5	Criticality Controls	Information within the DSA is supplemented. Nuclear criticality safety barriers associated with leaked saltcake formation and dissolution need to be addressed. A full assessment of leaked salt formation and dissolution is covered in DSA Addendum Section 6.2.
N/A (New)	Nuclear Criticality Safety Barriers for 242-25H Evaporator System	Information within the DSA is supplemented. Nuclear criticality safety barriers associated with leaked saltcake formation and dissolution need to be addressed. A full assessment of leaked salt formation and dissolution is covered in DSA Addendum Section 6.2.

6.2 Operation of the 242-25H Evaporator with a Leak Inadvertent Criticality Review

The following sections contain description that supplements the DSA sections as discussed in DSA Addendum Table 6.1-1.

6.2.1 Waste Storage (CSTF DSA Sections 6.3.1/6.4.1)

Salt created due to the leak of the 242-25H Evaporator is not a criticality concern while in the cell due to limited mass and areal density. Therefore, salt stored in the 242-25H Evaporator Cell is not a criticality concern as discussed in Reference 21.

6.2.2 Saltcake Dissolution (CSTF DSA Sections 6.3.3/6.4.2)

Dissolution of the salt in the 242-25H Evaporator Cell can be shown to not pose a criticality concern due to the concentration of fissile material in the salt and the limited volume of salt that may form during operation of the 242-25H Evaporator with leak sites. Reference 21 demonstrates fissile material will not collect in the sump during cleaning (e.g., due to the slow settling rate of fissile material, due to the location of the sump jet suction).

6.2.3 Criticality Controls (CSTF DSA Section 6.5)

The nuclear criticality safety barriers addressed in 242-25H Evaporator Operation with Leak Sites Nuclear Criticality Safety Evaluation (NCSE) (Ref. 21) are based on the limited fissile mass that may accumulate in the evaporator cell over the lifetime of operations. The NCSE examined up to 5,500 gallons of salt in the evaporator cell at bounding fissile concentrations. This volume contains sufficient margin to bound any credible volume of total salt formed in the evaporator cell during the limited life of the DSA Addendum. As discussed in DSA Addendum Section 1.0, the DSA Addendum will be superseded prior to or concurrent with implementation of the 2019 CSTF DSA Annual Update.

The preceding assessment demonstrates that criticality is incredible for 242-25H Evaporator operations with leaks due to the multiple independent process barriers (i.e., assumptions, design features, administrative controls). These barriers are listed in DSA Addendum Table 6.2-1. The appropriate designation for each of the barriers (e.g., design feature, administrative control) is also listed in DSA Addendum Table 6.2-1.

Table 6.2-1: Nuclear Criticality Safety Barriers for 242-25H Evaporator System Operating with Leak Sites

A.	242-25H Evaporator System Design Features
1	The 242-25H Evaporator Cell sump is 2 feet x 3.5 feet by 2 feet high [Design Feature].
2	The 242-25H Evaporator Cell sump gutter is 24 feet long x 0.375 feet wide x 0.198 feet high [Design Feature].
3	The 242-25H Evaporator Cell sump jet suction is lower than 4.4 cm (1.73 in) from the bottom of the sump [Design Feature].
B.	**242-25H Evaporator System Operation**
1	The 242-25H Evaporator Cell Salt Evaluation Program requires periodic inspection of the cell to verify the volume of salt is less than 1,000 gallons [administrative control].

7.0 Balance of DSA Document Assessment

7.1 Balance of DSA Document Review

The Balance of the DSA document (Executive Summary, Chapters 1-2 and 7-18) was reviewed to assess whether the content of these sections is impacted (associated with technical issues described in DSA Addendum Section 1.0) by operation of the 242-25H Evaporator. DSA Addendum Table 7.1-1 contains the results of this assessment.

Table 7.1-1: Assessment of Balance of DSA Document Impact

CSTF DSA Section Impacted	Topic	Impact of Leak Sites and the Hydrogen Generation Rate PISA on 242-25H Evaporator Operation Within the DSA
2.4.3.3 Figure 2.4-7	242-25H Evaporator Pot Description Total cell volume 15,430.32 ft^3 Cell sump volume 15.78 ft^3	Information within the DSA is superseded. Some of the 242-25H Evaporator System inputs have been revised (a full assessment is covered in DSA Addendum Section 3.16). Some of the 242-25H Evaporator Pot Description details in CSTF DSA Section 2.4.3.3 are superseded by the new inputs: • The stainless steel lined evaporator cell is 20 feet by 27.5 feet by 32.55 feet high (supersedes 20 feet by 27.5 feet by 32 feet high). • The floor of the evaporator cell slopes to 2 feet by 3.5 feet by 2 feet deep sump (supersedes 2 feet 2 inches by 3 feet by 2 feet deep sump). • The 242-25H Evaporator vessel has a capacity of 18,621 gallons (supersedes 18,607 gallons). A description of the evaporator pot leaks and extent of condition is provided in DSA Addendum Section 2.1.
11.4.1.3	Evaporator Fire Hazard Analysis	Information within the DSA is supplemented. CSTF DSA Section 11.4.1.3 states that "The primary fire hazard of the 242-16H and 242-25H Evaporator structures consists of potential hydrogen buildup. The flammable vapor concentrations are maintained at safe levels by following the requirements of Chapter 3". This CSTF DSA statement should state that "The flammable vapor concentrations are maintained at safe levels by following the requirements of DSA Chapter 3 and the DSA Addendum". Additional information (beyond the safety related requirements of the DSA Chapter 3 and the DSA Addendum) regarding potential hydrogen buildup in the 242-25H Evaporator is provided in the HTF Fire Hazard Analyses (Ref. 22).
13.5.1, 13.5.2, 13.5.3	Credited Operator Actions	No change to the DSA is required. The section addresses operator actions that are used to define the scenarios and are completed in less than 4 hours with no credited controls. No operator actions of this type are impacted by the revised DBAs described in DSA Addendum Section 3.

CSTF DSA Section Impacted	Topic	Impact of Leak Sites and the Hydrogen Generation Rate PISA on 242-25H Evaporator Operation Within the DSA
16.1.2 16.3.1 16.3.3	Provisions for Decontamination and Decommissioning	No change to the DSA is required. The section mentions only general plans for Decontamination and Decommissioning of evaporators and does not need to address leak sites.
18.3.6.3	EPVE Installation	No change to the DSA is required. The section mentions that spills in the evaporator are contained and does not need to address leak sites.

8.0 References

1. Concentration, Storage, and Transfer Facilities Documented Safety Analysis. WSRC-SA-2002-00007, Rev. 20, August 2017.
2. Facility Safety Document Manual. Procedure Manual 11Q.
3. Consolidated Hazard Analysis for Operation of the 242-25H Evaporator with Leak Sites. U-CHA-H-00011, Rev. 0, April 2018.
4. Potentially Inadequate Recognition of the Effect of Organics on Hydrogen Generation Rates in CSTF. PISA PI-2017-0003.
5. Evaluation of the CSTF Radiological and Chemical Consequence Comparison Basis. G-ESR-H-00232, Rev. 1, April 2018.
6. Tank Farms Safety Analysis Input Deck. http://pceweb.srs.gov/inputdeck.
7. Total Effective Dose Factors for CSTF Waste Streams. S-CLC-G-00379, Rev. 1, October 2017.
8. 242-25H Evaporator Cell Explosion with Leak Sites. U-CLC-G-00047, Rev. 0, April 2018.
9. Explosion in the 242-25H Evaporator with Leak Sites. U-CLC-H-00127, Rev. 0, April 2018.
10. Evaluation of Evaporator Cell Walls for Loading due to Accidental Pressure Buildup. C-CLC-H-00943, Rev. 0, August 1998.
11. Transfer Errors, Overflows, Spills, Breaks, and Leaks in the CST Evaporators. U-CLC-H-00126, Rev. 0, April 2018.
12. Preparation Guide for U.S. Department of Energy Nonreactor Nuclear Facility Documented Safety Analyses. DOE-STD-3009-94, Change Notice No. 3, U.S. Department of Energy, Washington, DC, March 2006.
13. High Activity Supernate and Sludge Slurry Bounding Dose Rate Estimates. N-CLC-G-00098, Rev. 3, August 2006.
14. Cameron Hydraulic Data. 16th Edition, Ingersoll-Rand, Woodcliff, NJ, 1984.
15. De-Entrainment Column Behavior in High Level Waste Evaporators During Tube Bundle Rupture Accident (U). M-CLC-G-00301, Rev. 0, October 2000.
16. 242-25H Primary Ventilation System, M-BFA-H-00023, Rev. 0, March 2018.
17. 242-25H Evaporator Cell Sump Conductivity Probe and High-Level Alarm, J-BFA-H-00010, Rev. 0, March 2018.
18. Minimum Staffing Requirements for the Concentration, Storage and Transfer Facilities (CSTF). U-ESR-H-00079, Rev. 8, February 2016.
19. Vapor Space Turnovers (U). S-CLC-G-00283, Rev. 0, June 2002.
20. NFPA 69, Standard on Explosion Prevention Systems. National Fire Protection Association, Quincy, MA, 2014 Edition.

21. Nuclear Criticality Safety Evaluation: Operation of the 242-25H Evaporator with Leak Sites. N-NCS-H-00310, Rev. 0, April 2018.

22. Fire Hazards Analysis for the H-Area Tank Farm (U). F-FHA-H-00069.

23. Integration of Safety into the Design Process. DOE-STD-1189-2008, U.S. Department of Energy, Washington, DC, March 2008.

24. DOE Handbook - Nuclear Air Cleaning Handbook. DOE-HDBK-1169-2003, U.S. Department of Energy, Washington, DC, November 2003.

25. Permissible Leak Rate for Level 4 Waste Purge Ventilation Systems. M-CLC-G-00460, Rev. 0, May 2017.

26. 25H Evaporator Cell Backup Ventilation System Calculation. M-CLC-H-03513, Rev. 0, April 2018.

27. Letter, Smith, C. to Anderson, W.F. Savannah River Remediation, LLC (SRR) "Contract DE-AC09-SR22505 – Request for Concurrence with the Safety Basis Strategy for Liquid Waste Operations Safety Basis Changes and Approval for Extension of the Concentration, Storage, and Transfer Facilities (CSTF) 2018 Annual Update," (Your letter Anderson to Smith, SRR-CAA-2018-00062, dated 3/6/2018). WDED-18-19, Department of Energy Savannah River Operations Office, Aiken, SC, May 22, 2018.