SRR-CWDA-2015-00112
Revision 3

Evaluation of the Decontaminated Salt Solution Resulting from the Proposed Savannah River Site Tank Closure Cesium Removal Operations

June 2016

Prepared by: Savannah River Remediation LLC
Waste Disposal Authority
Aiken, SC 29808

Prepared for U.S. Department of Energy Under Contract No. DE-AC09-09SR22505

APPROVALS

Author:

L. B. Romanowski
Waste Disposal Authority
Savannah River Remediation LLC

6/16/16
Date

Consistency Review:

M. T. Keefer
Tank Closure Cesium Removal Engineering Manager
Savannah River Remediation LLC

6/16/16
Date

Technical Review (per ENG.51)/Management Review:

L.B. Romanowski for S.A. Thomas per telecon
S. A. Thomas, Manager
Waste Disposal Authority
Savannah River Remediation LLC

6/16/16
Date

No Legal Objection:

L.B. Romanowski for T.F. England per telecon
T. F. England, Associate General Counsel
Office of General Counsel
Savannah River Remediation LLC

6/16/16
Date

EXECUTIVE SUMMARY

The Secretary of Energy, by issuance of the *Section 3116 Determination for Salt Waste Disposal at the Savannah River Site* (hereinafter referred to as: Salt Waste Disposal [SWD] 3116 Determination), concluded that:

> [P]ursuant to Section 3116 of the Ronald W. Reagan National Defense Authorization Act for Fiscal Year 2005, the Savannah River Site treated salt waste is not high-level waste and may be disposed of in the Saltstone Disposal Facility at the Savannah River Site. [DOE_01-17-2006]

The *Basis for Section 3116 Determination for Salt Waste Disposal at the Savannah River Site*, DOE-WD-2005-001 (hereinafter referred to as: SWD 3116 Basis Document), contains a description of the salt waste treatment and disposal strategies that were proposed at that time and demonstrates how each of the criteria in Section 3116(a) of the *Ronald W. Reagan National Defense Authorization Act for Fiscal Year 2005* was satisfied. [NDAA_3116] The salt waste treatment strategy as envisioned in the SWD 3116 Basis Document is a two-phase, three-part process. The initial phase of salt processing is referred to as Interim Salt Processing consisting of two parts, Deliquification, Dissolution and Adjustment (DDA) treatment and Actinide Removal Process/Modular Caustic Side Solvent Extraction Unit (ARP/MCU) treatment. The second phase is referred to as High Capacity Salt Processing utilizing the Salt Waste Processing Facility (SWPF).

Based on the latest Liquid Waste System Plan, utilizing technical and processing information from Interim Salt Processing to date, it has become evident that the United States Department of Energy (DOE) cannot achieve the necessary waste tank space recovery needed prior to SWPF start-up to meet waste tank space objectives. [SRR-LWP-2009-00001] Most notably, without an increase in salt processing rates during Interim Salt Processing, the ability to operate SWPF at full capacity will not be possible until years after SWPF start-up.

Footnote 33 of the SWD 3116 Basis Document states the following:

> DOE is exploring ways to mitigate the impacts associated with the delay in the startup of the SWPF without increasing the curies to be disposed of with interim processing (DDA, ARP, MCU). Among other things, DOE anticipates exploring possible ways to decrease the design and construction time for the SWPF. DOE will not increase the curies to be disposed of under the interim strategy.

Consistent with the above wording, DOE is evaluating Tank Closure Cesium Removal (TCCR) as an option to improve throughput during Interim Salt Processing. TCCR, utilizing filtration and ion exchange technology, provides the capability to perform insoluble solids and cesium removal on liquid salt waste (i.e., supernate or dissolved salt solution) consistent with removal levels described in the SWD 3116 Basis Document. The technical maturity of the processing systems that serve as the basis for the TCCR treatment process has increased considerably with the recent development and deployment of similar systems to support the cleanup efforts at the Fukushima Daiichi nuclear complex in Japan. The initial deployment of TCCR at Savannah River Site (SRS) would be to utilize the process to remove cesium from dissolved salt solution

resulting from the dissolution of Tank 10 saltcake prior to transferring the Decontaminated Salt Solution (DSS) to Tank 11 for subsequent transfer to Tank 50 and disposal at the Saltstone Disposal Facility (SDF).

Deployment of TCCR to treat dissolved salt solution (e.g., Tank 10 dissolved salt solution) results in a DSS that is consistent with the Interim Salt Processing waste streams evaluated for the SWD 3116 Determination, assuming the TCCR process results in a Cs-137 decontamination factor (DF) of at least 24 and the total amount of radioactive material (i.e., total curies) to be disposed via treatment of the salt solution does not result in the cumulative total through Interim Salt Processing to exceed the approximately 2,800 kCi evaluated in the SWD 3116 Basis Document.[1]

Determination of the actual DF realized during processing will be based on sampling and analysis of the salt solution feed material (i.e., Tank 10) and the TCCR effluent stream (i.e., Tank 11). In addition, on-line monitoring of the TCCR effluent stream will be performed to monitor real time performance of the cesium removal column, or columns, such that processing can be suspended in the case of an upset condition (e.g., column breakthrough) or deteriorated performance of the column. Additionally, performance of the TCCR process will be confirmed through completion of the Unreviewed Waste Management Question process and verified by required Tank 50 sampling to ensure compliance with all applicable requirements of the Saltstone Facility Radioactive Waste Management Basis which includes, among other requirements, the SDF Disposal Authorization Statement, waste acceptance criteria, the Performance Assessment, SWD 3116 Basis Document, and State permits.

DOE may consider deployment to treat dissolved salt solution from other waste tanks in the future. This document evaluates only the DSS that would result from the TCCR process and is provided to support a potential DOE decision that the DSS waste stream may be disposed of as low-level waste in the SDF at SRS. This document does not address any spent media or equipment that may be associated with the TCCR process.

[1] As described in the SWD 3116 Basis Document, 2,800 kCi are associated with Interim Salt Processing and 200 kCi are associated with High-Capacity Salt Processing for a total of 3,000 kCi. It was also noted that due to uncertainty the actual curie content resulting from these salt processing phases may be higher (i.e., as high as 5,000 kCi).

TABLE OF CONTENTS

EXECUTIVE SUMMARY 3
TABLE OF CONTENTS 5
LIST OF FIGURES 5
ACRONYMS 6
1.0 BACKGROUND 7
2.0 TANK CLOSURE CESIUM REMOVAL 10
3.0 TANK CLOSURE CESIUM REMOVAL OPERATIONS CONSISTENCY WITH THE SWD 3116 BASIS DOCUMENT 12
3.1 Section 3116(a)(1) 13
3.2 Section 3116(a)(2) 14
3.3 Section 3116(a)(3)(A) 15
3.4 Section 3116(a)(3)(A)(i) 16
3.4.1 Section 61.41, Protection of the General Population from Releases of Radioactivity 16
3.4.2 Section 61.42, Protection of Individuals from Inadvertent Intrusion 18
3.4.3 Section 61.43, Protection of Individuals During Operations 19
3.4.4 Section 61.44, Stability of the Disposal Site After Closure 20
3.5 Section 3116(a)(3)(A)(ii) 20
4.0 CONCLUSIONS 22
5.0 REFERENCES 23

LIST OF FIGURES

Figure 1.0-1: Salt Processing Pathways [DOE-WD-2005-001] 7
Figure 2.0-1: TCCR for Tank 10 Dissolution 10

ACRONYMS

ARP	Actinide Removal Process
CFR	Code of Federal Regulations
DDA	Deliquification, Dissolution, and Adjustment
DF	Decontamination Factor
DOE	United Sates Department of Energy
DSS	Decontaminated Salt Solution
DWPF	Defense Waste Processing Facility
HRR	Highly Radioactive Radionuclide
kCi	Kilocurie
MCi	Million Curies
MCU	Modular Caustic Side Solvent Extraction Unit
NDAA	Ronald W. Reagan National Defense Authorization Act for Fiscal Year 2005
NRC	United States Nuclear Regulatory Commission
PA	Performance Assessment
SCDHEC	South Carolina Department of Health and Environmental Control
SDF	Saltstone Disposal Facility
SDU	Saltstone Disposal Unit
SPF	Saltstone Production Facility
SRS	Savannah River Site
SWD	Salt Waste Disposal
SWPF	Salt Waste Processing Facility
TCCR	Tank Closure Cesium Removal
UWMQ	Unreviewed Waste Management Question

1.0 BACKGROUND

On January 17, 2006, the Secretary of Energy, by issuance of the *Section 3116 Determination for Salt Waste Disposal at the Savannah River Site* (hereinafter referred to as: Salt Waste Disposal [SWD] 3116 Determination), concluded that:

> [P]ursuant to Section 3116 of the Ronald W. Reagan National Defense Authorization Act for Fiscal Year 2005, the Savannah River Site treated salt waste is not high-level waste and may be disposed of in the Saltstone Disposal Facility at the Savannah River Site. [DOE_01-17-2006]

The *Basis for Section 3116 Determination for Salt Waste Disposal at the Savannah River Site*, DOE-WD-2005-001 (hereinafter referred to as: SWD 3116 Basis Document), describes in detail the salt processing strategy as envisioned at the time the SWD 3116 Basis Document was developed. Figure 1.0-1 shows the salt processing pathways and the originally anticipated curie distribution, and is a reproduction of Figure 2.1 in the SWD 3116 Basis Document.

Figure 1.0-1: Salt Processing Pathways [DOE-WD-2005-001]

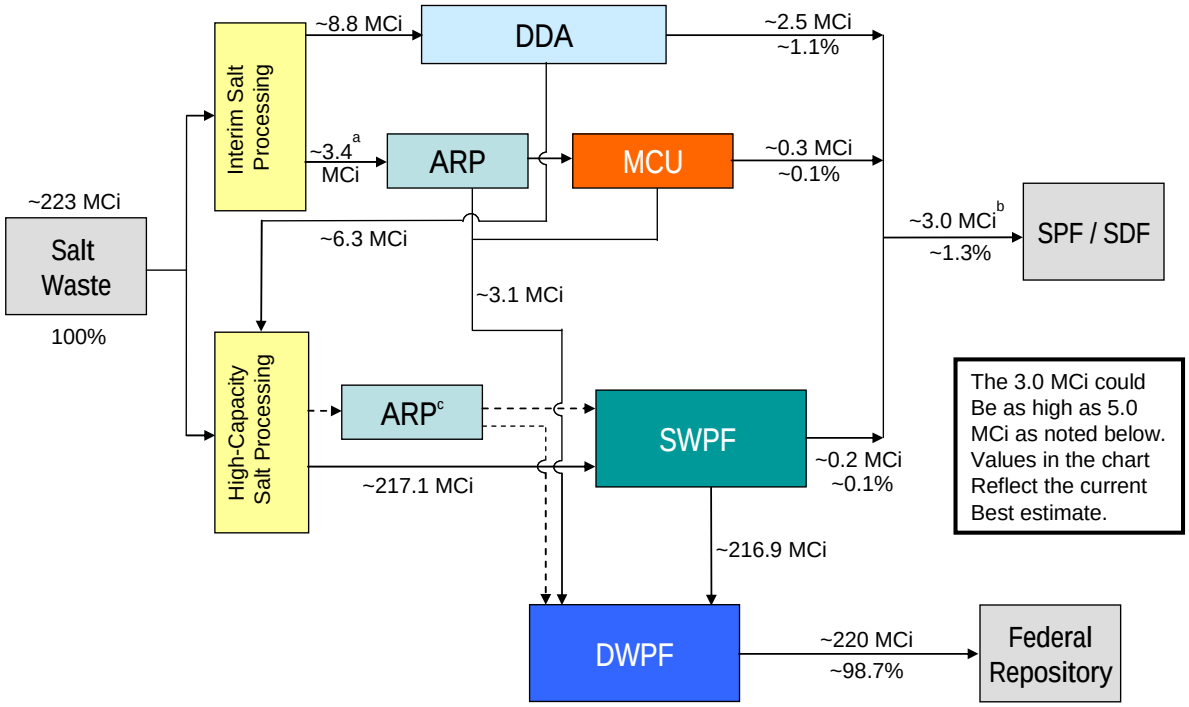

[a] Prior to treatment in ARP/MCU all saltcake waste will have undergone DDA.

[b] Due to the uncertainty associated with the current characterization of the saltcake waste, the actual curie content of this material may be as high as 5 MCi and the percentages would change accordingly. Curie numbers include daughter products of Cs-137 and Sr-90.

[c] ARP Facilities will have the capability to supplement the actinide removal capacity of SWPF if needed.

The initial phase of salt processing is referred to as Interim Salt Processing, and, as envisioned in the SWD 3116 Basis Document, consists of two parts, Deliquification, Dissolution, and Adjustment (DDA) treatment and Actinide Removal Process/Modular Caustic Side Solvent Extraction Unit (ARP/MCU) treatment. The SWD 3116 Basis Document provides extensive discussion on the advantages of proceeding with Interim Salt Processing while the High-Capacity Salt Processing technology, Salt Waste Processing Facility (SWPF), undergoes design and construction. The SWD 3116 Basis Document justifies use of Interim Salt Processing based on the benefit of the overall risk reduction. The Interim Salt Processing treatments were selected for their combined ability to significantly reduce the amount of Cs-137 and its associated daughter product Ba-137m, as well as some quantity of Sr-90 (and its daughter Y-90) and actinides, sent to the Saltstone Disposal Facility (SDF) during the interim period.

As described in the SWD 3116 Basis Document the DDA process includes an interstitial liquid removal step that, under ideal conditions, results in the equivalent of a Cs-137 removal decontamination factor (DF) of approximately two. The MCU process, as evaluated in the SWD 3116 Basis Document, was assumed to provide a Cs-137 DF of twelve. In addition, it was assumed that dissolved salt solution being treated by ARP/MCU had previously gone through interstitial liquid removal resulting in an overall effective Cs-137 DF of 24 for the treatment of dissolved salt solution.[2] Therefore, the maximum Cs-137 DF assumed in the SWD 3116 Basis document for any of the Interim Salt Processing Decontaminated Salt Solution (DSS) streams was a DF of 24.

The United States Department of Energy (DOE) has now treated salt waste utilizing the Interim Salt Processing technologies beginning with DDA processing starting in 2006 and ARP/MCU starting in 2008. Processing of salt waste by ARP/MCU is on-going and current plans call for ARP/MCU to remain operational into Fiscal Year 2018. Operation of the ARP/MCU facilities into Fiscal Year 2018 was assessed against the SWD 3116 Basis Document to support continued Interim Salt Processing should the start-up date for SWPF move as late as September 2018.[3] [SRR-CWDA-2010-00062] The amount of material (i.e., curies) to be disposed of in SDF as a result of Interim Salt Processing is anticipated to be well below the approximately 2,800 kCi evaluated to support the SWD 3116 Determination.

Based on the latest Liquid Waste System Plan, utilizing technical and processing information from ARP/MCU operations to date, it has become evident that with continued treatment of salt waste utilizing the current ARP/MCU processing capability, DOE cannot achieve the necessary waste tank space recovery needed prior to SWPF start-up to meet waste tank space objectives. [SRR-LWP-2009-00001]

[2] A previous evaluation of the need to perform interstitial draining of saltcake prior to treatment by ARP/MCU concluded that interstitial draining is not required due to the overall average cesium DF of MCU being significantly greater than 24. [SRR-CWDA-2010-00062] DOE Savannah River Operations Office approved this evaluation and associated conclusion per letter WDPD-13-41, Smith to Schlismann, dated March 19, 2013.

[3] DOE Savannah River Operations Office approved this evaluation and associated conclusion per letter WDPD-13-41, Smith to Schlismann, dated March 19, 2013.

Most notably, without an increase in salt processing rates during Interim Salt Processing, the ability to operate SWPF at full capacity will not be possible until years after SWPF start-up.

Footnote 33 of the SWD 3116 Basis Document states the following:

> DOE is exploring ways to mitigate the impacts associated with the delay in the startup of the SWPF without increasing the curies to be disposed of with interim processing (DDA, ARP, MCU). Among other things, DOE anticipates exploring possible ways to decrease the design and construction time for the SWPF. DOE will not increase the curies to be disposed of under the interim strategy.

Consistent with the above wording, to mitigate impacts associated with delay in the start-up of SWPF, DOE is evaluating/developing ways to increase the throughput during Interim Salt Processing in an effort to increase salt processing capability to provide the necessary tank space to support removal of sludge and full capacity operation of SWPF as soon as possible after start-up. As stated in the SWD 3116 Basis document, operation of ARP in filter-only mode (i.e., no removal of soluble Sr-90, and associated daughter Y-90, or soluble actinides) has been implemented to increase throughput of the treatment process. In addition, DOE is evaluating Tank Closure Cesium Removal (TCCR) as an option to improve throughput during Interim Salt Processing.

2.0 TANK CLOSURE CESIUM REMOVAL

TCCR will provide an ion exchange process that will remove cesium, including Cs-137, from salt waste and will include filtration that will remove insoluble solids. The technical maturity of the process systems which serve as the basis for the TCCR treatment process has increased considerably with the recent development and deployment of similar systems to support the cleanup efforts at the Fukushima Daiichi nuclear complex in Japan. The initial proposed deployment of TCCR would be to treat dissolved salt solution resulting from the dissolution of Tank 10 saltcake prior to transferring the solution to Tank 11 for subsequent transfer to Tank 50 and disposal at SDF. Figure 2.0-1 provides an overview of the proposed arrangement.

Figure 2.0-1: TCCR for Tank 10 Dissolution

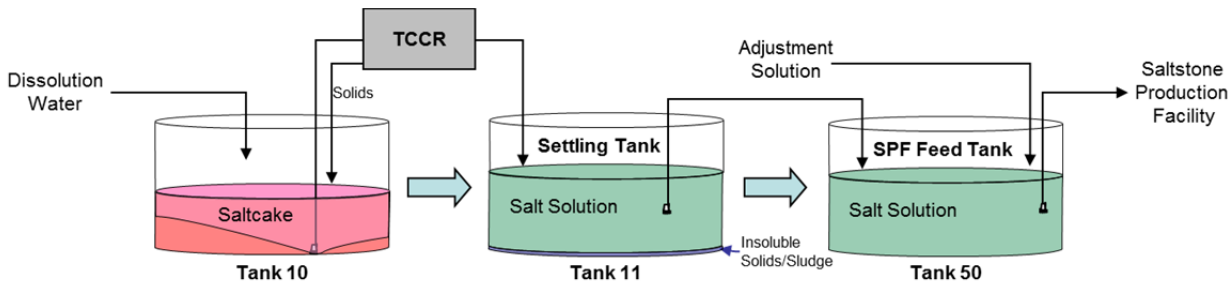

Dissolution water would be added to Tank 10, dissolving a portion of the saltcake and creating salt solution. The salt solution would be transferred from Tank 10 to the TCCR process. In the TCCR process the salt solution will be filtered and sent to an ion exchange column for removal of cesium (e.g., Cs-137). Filtered solids would be returned to Tank 10. From the ion exchange column, the salt solution would be sent to Tank 11. Prior to the introduction of DSS from the TCCR process into Tank 11, the majority of existing liquid currently contained in Tank 11 (i.e., salt solution from a previous Tank 10 salt dissolution campaign) will be removed from the tank and sent to another liquid waste tank for future treatment. After the available Tank 10 dissolved salt solution has been transferred to TCCR, the dissolution process will be repeated to continue to dissolve the remaining Tank 10 saltcake until the desired batch volume has accumulated in Tank 11. After the treated salt solution has been allowed to sufficiently settle in Tank 11, the salt solution will be decanted, to minimize carryover of any existing Tank 11 solids, and transferred from Tank 11 to Tank 50. The process will be repeated until the saltcake has been removed from Tank 10 or the dissolution process reaches the point of diminished effectiveness. The settled solids in Tank 10 and Tank 11 are expected to be transferred to the Defense Waste Processing Facility (DWPF) for vitrification and disposal in the geologic repository. Once the salt solution is in Tank 50, the salt solution may be aggregated with other low-level waste streams to adjust batch chemistry. Chemistry adjustment may be required to ensure the salt solution feed stream meets Saltstone Production Facility (SPF) processing parameters (e.g., sodium concentration, organic content).

TCCR is anticipated to provide Cs-137 removal equivalent to a DF much greater than the maximum DF of 24 associated with any of the Interim Salt Processing DSS streams assumed in the SWD 3116 Basis Document. The DF associated with the TCCR process is a function of ion exchange media selection, column sizing, and frequency of ion exchange resin replacement. Determination of the actual DF realized during processing will be based on sampling and analysis of the salt solution feed material (i.e., Tank 10) and the TCCR effluent stream (i.e., Tank 11). In addition, on-line monitoring of the TCCR effluent stream will be performed to monitor real time performance of the cesium removal column, or columns, such that processing can be suspended in the case of an upset condition (e.g., column breakthrough) or deteriorated performance of the column. Additionally, performance of the TCCR process will be verified by required Tank 50 sampling to ensure compliance with the SDF waste acceptance criteria

As previously described, DOE has implemented ARP/MCU filter-only operations to mitigate the impacts of delays in the start-up of SWPF. TCCR will include filtration of solids in advance of the ion exchange column to prevent plugging of the column, consistent with the filtering of solids in the ARP process.

The TCCR process is not expected to impact the dissolved salt solution in any manner that would differ from current Interim Salt Processing. Nevertheless, the DSS resulting from the TCCR process must continue to meet all of the NDAA Section 3116 criteria; therefore, an evaluation of the implementation of TCCR on dissolved salt solution for consistency with the SWD 3116 Determination is provided in Section 3.0.[4]

[4] This document evaluates only the DSS that would result from the TCCR process and is being provided to support a potential DOE decision that the DSS waste stream may be disposed of as low-level waste in the SDF at SRS. This document does not address any spent media or equipment that may be associated with the TCCR process.

3.0 TANK CLOSURE CESIUM REMOVAL OPERATIONS CONSISTENCY WITH THE SWD 3116 BASIS DOCUMENT

As discussed previously, the Secretary of Energy made the SWD 3116 Determination "For the reasons set forth in the attached Basis for Section 3116 Determination for Salt Waste Disposal at the Savannah River Site." Therefore, any changes to the salt waste treatment processes (i.e., DDA, ARP/MCU, SWPF) differing from that literally described in the SWD 3116 Basis Document need to be evaluated to determine that the treatment process remains consistent with all of the NDAA Section 3116 criteria as provided in the SWD 3116 Basis Document.

The deployment of TCCR is not explicitly described in the SWD 3116 Basis Document; however, the deployment of TCCR to treat dissolved salt solution, assuming TCCR has a Cs-137 DF of at least 24, is similar to ARP/MCU filter-only operations as described in the SWD 3116 Basis Document. As a result, treatment of dissolved salt solution through TCCR results in a DSS consistent with the Interim Salt Processing waste streams evaluated in the SWD 3116 Determination. Nevertheless, TCCR must be consistent with the Interim Salt Processing results in meeting all of the NDAA Section 3116 criteria. This section evaluates the use of TCCR against each of the NDAA Section 3116 criteria.

Section 3116(a) of the NDAA provides:

> IN GENERAL.-Notwithstanding the provisions of the Nuclear Waste Policy Act of 1982, the requirements of section 202 of the Energy Reorganization Act of 1974, and other laws that define classes of radioactive waste, with respect to material stored at a Department of Energy site at which activities are regulated by a covered State pursuant to approved closure plans or permits issued by the State, the term "high-level radioactive waste" does not include radioactive waste resulting from the reprocessing of spent nuclear fuel that the Secretary of Energy (in this section referred to as the "Secretary"), in consultation with the Nuclear Regulatory Commission (in this section referred to as the "Commission"), determines -
>
> (1) does not require permanent isolation in a deep geologic repository for spent fuel or high-level radioactive waste;
>
> (2) has had highly radioactive radionuclides removed to the maximum extent practical; and
>
> (3) (A) does not exceed concentration limits for Class C low-level waste as set out in Section 61.55 of title 10, Code of Federal Regulations, and will be disposed of—
>
> (i) in compliance with the performance objectives set out in subpart C of part 61 of title 10, Code of Federal Regulations; and
>
> (ii) pursuant to a State-approved closure plan or State-issued permit, authority for the approval or issuance of which is conferred on the State outside of this section; or

(B) exceeds concentration limits for Class C low-level waste as set out in section 61.55 of title 10, Code of Federal Regulations, but will be disposed of—

(i) in compliance with the performance objectives set out in subpart C of part 61 of title 10, Code of Federal Regulations, and

(ii) pursuant to a State-approved closure plan or State-issued permit, authority for the approval or issuance of which is conferred on the State outside of this section; and

(iii) pursuant to plans developed by the Secretary in consultation with the Commission.

In the SWD 3116 Basis Document, it was demonstrated that the solidified DSS (i.e., saltstone) would not exceed the concentration limits for Class C waste in Code of Federal Regulations (CFR) 10 CFR 61.55. Therefore, the provisions of NDAA Section 3116(a)(3)(B), concerning waste which exceeds Class C concentration limits, were not addressed in the SWD 3116 Determination.

3.1 Section 3116(a)(1)

Section 3116(a)(1) of the NDAA provides in pertinent part:

> [T]he term "high-level radioactive waste" does not include radioactive waste resulting from the reprocessing of spent nuclear fuel that the Secretary of Energy…, in consultation with the Nuclear Regulatory Commission…, determines—
>
> (1) does not require permanent isolation in a deep geologic repository for spent fuel or high-level radioactive waste[.]

The SWD 3116 Basis Document states:

> As is demonstrated later in this document, the solidified low-activity salt waste falls within Class C limits and hence falls within one of the categories that the NRC has concluded is generally appropriate for near-surface disposal. Moreover, as is also demonstrated later in this document, its disposal in SDF will meet the performance objectives of Part 61 Subpart C. Therefore, the disposal of this waste in SDF will provide for the protection of the public health and the environment. Accordingly, the waste does not require disposal in a deep geologic repository by reason of risk to the public health and safety. Furthermore, disposal of the solidified low-activity salt waste in SDF does not raise any unique considerations that, notwithstanding these demonstrations, nevertheless require its permanent isolation in a deep geologic repository. Accordingly, the solidified low-activity salt waste qualifies for disposal as other than high-level waste under the first clause of subsection (a).

The Secretary of Energy determined that the Interim Salt Processing waste streams, as described in the SWD 3116 Basis Document, did not raise any unique considerations that required disposal in a deep geologic repository. Considering that the TCCR process would result in a DSS stream consistent with the Interim Salt Processing DSS streams evaluated in the SWD 3116 Basis

Document and the resulting DSS would still be required to meet other NDAA Section 3116 criteria in Section 3116(a)(2) and Section 3116(a)(3), utilizing TCCR on dissolved salt would not raise any unique considerations which would require disposal of the waste in a deep geologic repository.

3.2 Section 3116(a)(2)

The Section 3116(a)(2) of the NDAA provides in pertinent part:

> [T]he term "high-level radioactive waste" does not include radioactive waste resulting from the reprocessing of spent nuclear fuel that the Secretary of Energy..., in consultation with the Nuclear Regulatory Commission…, determines—
>
> (2) has had highly radioactive radionuclides removed to the maximum extent practical[.]

The radionuclides considered highly radioactive radionuclides (HRRs) in the SWD 3116 Basis Document are Se-79, Sr-90 (and its daughter Y-90), Tc-99, I-129, Cs-137 (and its daughter Ba-137m), Pu-238, Pu-239, Am-241 and Cm-244. These radionuclides were chosen because they "contribute most significantly to radiological risk to workers, the public, and the environment."

Section 5.0 of the SWD 3116 Basis Document discusses the rationale for determining that the criterion in NDAA Section 3116(a)(2) will be met. The SWD 3116 Basis Document states:

> In sum, DOE's salt waste processing strategy will result in removal of highly radioactive radionuclides to the maximum extent practical. As explained above, in all, the plan will result in removal of 218 to 220 MCi of the 223 MCi present in the SRS salt waste. DOE's best estimate is that 3 MCi, mostly the short-lived radionuclide Cs-137 and its daughter Ba-137m, will be solidified and disposed of at SDF (although due to the uncertainty associated with the current characterization of the saltcake waste, the actual curie content of this material may be as high as 5 MCi). Collectively, DDA, ARP, MCU, and SWPF will remove 98.7% of the curies from salt waste for vitrification in DWPF and ultimately permanent disposal in a deep geologic repository.
>
> To process the vast majority and the more radioactive salt waste, DOE will use the SWPF, which will use state-of-the-art removal technologies, as soon as this facility is constructed and operational. In the meantime, DOE will use combinations of the interim technologies to process the minimal amounts of particularly low-activity salt waste that must be removed to create the tank space necessary to allow DOE to continue to vitrify sludge and to be in a position to operate SWPF at close to capacity as soon as it is operational. These technologies are the best available during this timeframe to remove radionuclides from enough of this waste to create the needed space, and all will remove significant amounts of radionuclides from this waste. Accordingly, DOE's salt waste processing strategy will remove highly radioactive radionuclides to the maximum extent practical. [Citations and references omitted.]

In the SWD 3116 Basis Document, relative to the Interim Salt Processing phase, the rationale for concluding that HRRs had been removed to the maximum extent practical was based on utilizing DDA and ARP/MCU until High-Capacity Salt Processing is available.

> These interim technologies will not remove as much radioactivity from the salt waste as SWPF. However, they will remove significant amounts. Moreover, DDA is available now and ARP and MCU will be available in 2007, sooner than SWPF, which will not be available until 2011. They are the best removal technologies available to DOE during this interim period.

When the SWD 3116 Basis Document was written, High-Capacity Salt Processing was anticipated to be initiated in Fiscal Year 2011 with the start-up of SWPF, but a recent letter regarding Liquid Waste System Plan assumptions from DOE provides the following assumption for start-up of SWPF "SWPF becomes available for operations beginning December 3, 2018." [WDPD-15-15]

The SWD 3116 Basis Document also describes the time-associated risk reduction aspects of Interim Salt Processing:

> Rather than wait until SWPF becomes available, DOE believes the better course is for it to proceed to use these technologies [Interim Salt Processing] to remove radionuclides from and process a minimal amount of some of the lowest activity salt waste so that it can dispose of these salt wastes at SDF.…Accordingly, use of these interim technologies accelerates risk reduction through processing the minimal amount of the lowest activity salt waste to create the necessary tank space for continued sludge removal and earlier full SWPF operation resulting in removal of highly radioactive radionuclides to the maximum extent practical during that timeframe.

Therefore, use of Interim Salt Processing technologies as described in the SWD 3116 Basis Document until SWPF is available is considered within the scope of the SWD 3116 Determination relative to the criterion in NDAA Section 3116(a)(2).

In the SWD 3116 Basis Document, relative to the Interim Salt Processing phase, the use of DDA and ARP/MCU prior to the start-up of SWPF for disposition of the quantity of material (i.e., total curies) evaluated within the document was determined to meet the criterion of NDAA Section 3116(a)(2). Processing of salt solution by TCCR would result in a DSS stream consistent with the Interim Salt Processing DSS streams evaluated in the SWD 3116 Basis Document. Therefore, utilizing TCCR on dissolved salt solution will be consistent with Section 3116(a)(2) of the NDAA.

3.3 Section 3116(a)(3)(A)

The Section 3116(a)(3)(A) of the NDAA provides in relevant part:

> [T]he term "high-level radioactive waste" does not include radioactive waste resulting from the reprocessing of spent nuclear fuel that the Secretary of Energy…, in consultation with the Nuclear Regulatory Commission…, determines─

> (3) (A) does not exceed concentration limits for Class C low-level waste as set out in section 61.55 of title 10, Code of Federal Regulations…[.]

The DSS resulting from dissolution of saltcake and subsequent processing through TCCR will be required to meet the SPF waste acceptance criteria which, among other things, ensure that the resulting solidified waste form does not exceed concentration limits for Class C low-level waste. The DSS resulting from implementation of TCCR will be required to meet the SPF waste acceptance criteria. Therefore, operation of TCCR will be consistent with Section 3116(a)(3)(A) of the NDAA.

3.4 Section 3116(a)(3)(A)(i)

The Section 3116(a)(3)(A)(i) of the NDAA provides in relevant part:

> [T]he term "high-level radioactive waste" does not include radioactive waste resulting from the reprocessing of spent nuclear fuel that the Secretary of Energy…, in consultation with the Nuclear Regulatory Commission…, determines─
>
> (3)(A)…will be disposed of─
>
> (i) in compliance with the performance objectives set out in subpart C of part 61 of title 10, Code of Federal Regulations[.]

Subpart C of 10 CFR Part 61 lists one general requirement and four performance objectives. The general requirement in Section 61.40 states:

> Land disposal facilities must be sited, designed, operated, closed, and controlled after closure so that reasonable assurance exists that exposures to humans are within the limits established in the performance objectives in §§61.41 through 61.44.

10 CFR 61.40 requires "reasonable assurance" that exposures are within the limits of the subsequent performance objectives for 10 CFR 61.41 through 10 CFR 61.44.

3.4.1 Section 61.41, Protection of the General Population from Releases of Radioactivity

10 CFR 61.41 states:

> Concentrations of radioactive material which may be released to the general environment in ground water, surface water, air, soil, plants, or animals must not result in an annual dose exceeding an equivalent of 25 millirems to the whole body, 75 millirems to the thyroid, and 25 millirems to any other organ of any member of the public. Reasonable effort should be made to maintain releases of radioactivity in effluents to the general environment as low as is reasonably achievable.

To determine that the salt waste will be disposed of in conformity with the performance objective in 10 CFR 61.41, DOE utilizes the potential radiological doses to a hypothetical member of the public as evaluated within *Performance Assessment for the Saltstone Disposal*

Facility at the Savannah River Site, SRR-CWDA-2009-00017 (hereinafter referred to as: SDF Performance Assessment[5] [PA]), and supporting *FY2014 Special Analysis for the Saltstone Disposal Facility at the Savannah River Site*, SRR-CWDA-2014-00006. The SDF PA demonstrates that given the assumed inventory for salt waste utilized in the SDF PA transport modeling, the radiological doses to a hypothetical member of the public would be below those provided in 10 CFR 61.41 and there continues to be reasonable assurance the performance objective in 10 CFR 61.41 will be met. In establishing the SDF PA modeling inventories, radionuclides were categorized as risk-significant (i.e., Tc-99, I-129, Cs-135) and non-risk significant (i.e., all other radionuclides). For non-risk significant radionuclides conservative inventories (i.e., the modeling inventory estimates are expected to be significantly higher than the actual disposed inventory) were utilized. For non-risk significant radionuclides, each of the future Saltstone Disposal Units (SDUs), including SDU 3 through SDU 12, was assumed to contain the entire soluble and insoluble (salt) inventory present in both F-Tank Farm and H-Tank Farm. An exception to this was if the radionuclide inventory (converted to a concentration using the SDU volume) was greater than the Class C limit. In those cases, the Class C limit was used for that radionuclide. This limitation is considered conservative given the fact that waste greater than Class C limits cannot be disposed of in the SDF as discussed in previous sections. For Cs-137, to account for processing through ARP/MCU or SWPF, a DF of 200 was applied to the total inventory. No additional DFs were applied to any of the other non-risk significant radionuclides. For the risk significant radionuclides, the remaining tank farm inventory was spread among the existing empty SDU volume and future SDU volume. An adjustment was made to the Cs-135 inventory, to account for processing through ARP/MCU and SWPF, by applying a DF of 200 to the estimated inventory.[6] No DFs were applied to the estimated Tc-99 or I-129 inventories. [SRR-CWDA-2013-00147]

Given the conservative methodology used to develop the radionuclide inventory utilized in the SDF PA transport modeling, the results of the SDF PA modeling remain valid if TCCR is implemented and results in a cesium DF of 200 or greater. It is anticipated that TCCR will result in a cesium DF in excess of the DF of 200 assumed in developing the modeling inventory. However, if the TCCR system does not provide a cesium DF of at least 200, the ability to demonstrate continued compliance with this performance objective will need to be confirmed through completion of the Unreviewed Waste Management Question (UWMQ) process. No other DFs were assumed for the remaining radionuclides, either risk significant or non-risk significant. Therefore, with the possible exception of cesium, implementation of TCCR would not invalidate the conclusions of the SDF PA based on estimated radionuclide inventories.

[5] In this context, reference to the SDF PA also includes any existing and subsequent Special Analyses and Unreviewed Waste Management Question Evaluations performed to support the SDF PA.

[6] The assumed cesium DF provided in the SWD 3116 Basis Documentation was a DF of twelve for the MCU process and 40,000 for SWPF. Based on actual field results, MCU has shown recent removal capability approximately 200 times the original assumed value. [SRR-LWP-2009-00001] The application of a DF of 200 to cesium radionuclides (i.e., Cs-137, Cs-135) for all treatment processes was considered a conservative assumption for use in the SDF PA modeling inventory.

Demonstration that the DSS stream being sent to SPF is acceptable from a radiological perspective would not by itself ensure this performance objective would continue to be met. Potentially, modifications to a salt waste treatment process could impact other characteristics of the DSS waste stream (e.g., pH, chemical content) that would adversely impact saltstone performance over time from that assumed in the SDF PA. Processing of dissolved salt solution through TCCR (i.e., ion exchange technology) would not be expected to change the characteristics of the resulting DSS stream. The resulting DSS stream going to Tank 50 is anticipated to have the same chemical properties as if processed solely by DDA or by ARP/MCU filter-only operations and therefore this performance objective is expected to be met. Once the actual TCCR processing parameters are determined (e.g., resin type, chemical adjustments) this will be confirmed through completion of the UWMQ process and will be verified by required Tank 50 sampling to ensure compliance with the SDF waste acceptance criteria which, among other things, ensure applicable assumptions within the SDF PA are protected.

3.4.2 Section 61.42, Protection of Individuals from Inadvertent Intrusion

10 CFR 61.42 states:

> Design, operation, and closure of the land disposal facility must ensure protection of any individual inadvertently intruding into the disposal site and occupying the site or contacting the waste at any time after active institutional controls over the disposal site are removed.

To determine that the salt waste will be disposed of in conformity with the performance objective in 10 CFR 61.42, DOE utilizes the potential radiological doses to a hypothetical inadvertent intruder as evaluated within the SDF PA.[7] The SDF PA demonstrates that given the assumed inventory for salt waste utilized in the SDF PA transport modeling, the radiological doses to an inadvertent intruder would be below those provided in 10 CFR 61.42 and there continues to be reasonable assurance the performance objective in 10 CFR 61.42 will be met. In establishing the SDF PA modeling inventories, radionuclides were categorized as risk-significant (i.e., Tc-99, I-129, Cs-135) and non-risk significant (i.e., all other radionuclides). For non-risk significant radionuclides conservative inventories (i.e., the modeling inventory estimates are expected to be significantly higher than the actual disposed inventory) were utilized. For non-risk significant radionuclides, each of the future Saltstone Disposal Units (SDUs), including SDU 3 through SDU 12, was assumed to contain the entire soluble and insoluble (salt) inventory present in both F-Tank Farm and H-Tank Farm. An exception to this was if the radionuclide inventory (converted to a concentration using the SDU volume) was greater than the Class C limit. In those cases, the Class C limit was used for that radionuclide. This limitation is considered conservative given the fact that waste greater than Class C limits cannot be disposed of in the SDF as discussed in previous sections. For Cs-137, to account for processing through ARP/MCU or SWPF, a DF of 200

[7] In this context, reference to the SDF PA also includes any existing and subsequent Special Analyses and Unreviewed Waste Management Question Evaluations performed to support the SDF PA.

was applied to the total inventory. No additional DFs were applied to any of the other non-risk significant radionuclides. For the risk significant radionuclides, the remaining tank farm inventory was spread among the existing empty SDU volume and future SDU volume. An adjustment was made to the Cs-135 inventory, to account for processing through ARP/MCU and SWPF, by applying a DF of 200 to the estimated inventory.[8] No DFs were applied to the estimated Tc-99 or I-129 inventories. [SRR-CWDA-2013-00147]

Given the conservative methodology used to develop the radionuclide inventory utilized in the SDF PA transport modeling, the results of the SDF PA modeling remain valid if TCCR is implemented and results in a cesium DF of 200 or greater. It is anticipated that TCCR will result in a cesium DF in excess of the DF of 200 assumed in developing the modeling inventory. However, if the TCCR system does not provide a cesium DF of at least 200, the ability to demonstrate continued compliance with this performance objective will need to be confirmed through completion of the UWMQ process. No other DFs were assumed for the remaining radionuclides, either risk significant or non-risk significant. Therefore, with the possible exception of cesium, implementation of TCCR would not invalidate the conclusions of the SDF PA based on estimated radionuclide inventories.

Demonstration that the DSS stream being sent to SPF is acceptable from a radiological perspective would not by itself ensure this performance objective would continue to be met. Potentially, modifications to a salt waste treatment process could impact other characteristics of the DSS waste stream (e.g., pH, chemical content) that would adversely impact saltstone performance over time from that assumed in the SDF PA. Processing of dissolved salt solution through TCCR (i.e., ion exchange technology) would not be expected to change the characteristics of the resulting DSS stream. The resulting DSS stream going to Tank 50 is anticipated to have the same chemical properties as if processed solely by DDA or by ARP/MCU filter-only operations and therefore this performance objective is expected to be met. Once the actual TCCR processing parameters are determined (e.g., resin type, chemical adjustments) this will be confirmed through completion of the UWMQ process and will be verified by required Tank 50 sampling to ensure compliance with the SDF waste acceptance criteria which, among other things, ensure applicable assumptions within the SDF PA are protected.

3.4.3 Section 61.43, Protection of Individuals During Operations

10 CFR 61.43 states:

> Operations at the land disposal facility must be conducted in compliance with the standards for radiation protection set out in part 20 of this chapter, except for releases of radioactivity in effluents from the land disposal facility, which shall be governed

[8] The assumed cesium DF provided in the SWD 3116 Basis Documentation was a DF of twelve for the MCU process and 40,000 for SWPF. Based on actual field results, MCU has shown recent removal capability approximately 200 times the original assumed value. [SRR-LWP-2009-00001] The application of a DF of 200 to cesium radionuclides (i.e., Cs-137, Cs-135) for all treatment processes was considered a conservative assumption for use in the SDF PA modeling inventory.

> by §61.41 of this part. Every reasonable effort shall be made to maintain radiation exposures as low as is reasonably achievable.

The DOE has programs in place to ensure protection of workers and the public during facility operations. As demonstrated in Section 7.2.3 of the SWD 3116 Basis Document, the DOE requirements for occupational radiological protection and those for radiological protection of the public and the environment are equivalent to the requirements contained in the performance objective at 10 CFR 61.43. Demonstration that the performance objective in 10 CFR 61.43 will be met does not rely on the specific salt waste treatment processes being utilized. Therefore, utilizing TCCR does not impact the ability to meet this performance objective.

3.4.4 Section 61.44, Stability of the Disposal Site After Closure

10 CFR 61.44 states:

> The disposal facility must be sited, designed, used, operated, and closed to achieve long-term stability of the disposal site and to eliminate to the extent practicable the need for ongoing active maintenance of the disposal site following closure so that only surveillance, monitoring, or minor custodial care are required.

Section 7.2.4 of the SWD 3116 Basis Document demonstrates that the SDF at closure meets the performance objective at 10 CFR 61.44, concerning long-term site stability. DOE reviewed the site characteristics, including demography, geography, meteorology, climatology, ecology, geology, seismology and hydrogeology. As demonstrated in Section 7.2.4 of the SWD 3116 Basis Document, the site conditions do not present hazards that threaten long-term SDF stability. In addition, the SDF closure methods will result in a facility closure that does not require ongoing maintenance. Demonstration that the performance objective in 10 CFR 61.44 will be met does not rely on the specific salt waste treatment processes being utilized. Utilizing TCCR does not impact the site conditions or closure methods at SDF and therefore does not impact the ability to meet this performance objective.

3.5 Section 3116(a)(3)(A)(ii)

The Section 3116(a)(3)(A)(ii) of the NDAA provides in relevant part:

> [T]he term "high-level radioactive waste" does not include radioactive waste resulting from the reprocessing of spent nuclear fuel that the Secretary of Energy…, in consultation with the Nuclear Regulatory Commission…, determines—
>
> (3) (A)… will be disposed of –
>
> (ii) pursuant to a State-approved closure plan or State-issued permit, authority for the approval or issuance of which is conferred on the State outside of this section[.]

SDF is operated under the regulatory requirements of a Class 3 Industrial Solid Waste Landfill. [DHEC_12-17-2012] The existing SDF permit (i.e., Permit #025500-1603) covers Interim Salt

Processing streams as acceptable waste streams, assuming all existing salt solution permit limits for radiological and chemical constituents continue to be met. If a new waste stream, such as that produced by TCCR, is to be disposed of, DOE would need to apply for permit modification to incorporate disposal of the waste stream. DOE will not be able to dispose of the solidified salt waste in the State-permitted SDF until SCDHEC issues the appropriate permit modifications. Therefore, as long as the waste stream is covered by a State-issued permit it would be considered within the scope of the SWD 3116 Determination relative to the criterion in NDAA Section 3116(a)(3)(A)(ii).

4.0 CONCLUSIONS

Consistent with the SWD 3116 Basis Document statement that "DOE is exploring ways to mitigate the impacts associated with the delay in the startup of the SWPF without increasing the curies to be disposed of with interim processing…", DOE is evaluating TCCR as an option to improve salt waste processing throughput during Interim Salt Processing. Deployment of TCCR to treat dissolved salt solution (e.g., Tank 10 dissolved salt solution) results in a DSS that is consistent with the Interim Salt Processing waste streams evaluated for the SWD 3116 Determination, assuming the TCCR process results in a Cs-137 DF of at least 24 and the total amount of radioactive material (i.e., total curies) to be disposed via treatment of the salt solution does not result in the cumulative total through Interim Salt Processing to exceed the approximately 2,800 kCi evaluated in the SWD 3116 Basis Document.[9]

Determination of the actual DF realized during processing will be based on sampling and analysis of the salt solution feed material (i.e., Tank 10) and the TCCR effluent stream (i.e., Tank 11). In addition, on-line monitoring of the TCCR effluent stream will be performed to monitor real time performance of the cesium removal column, or columns, such that processing can be suspended in the case of an upset condition (e.g., column breakthrough) or deteriorated performance of the column. Additionally, performance of the TCCR process will be confirmed through completion of the UWMQ process and verified by required Tank 50 sampling to ensure compliance with all applicable requirements of the Saltstone Facility Radioactive Waste Management Basis which includes, among other requirements, the SDF Disposal Authorization Statement, waste acceptance criteria, the Performance Assessment, SWD 3116 Basis Document, and State permits.

DOE may consider deployment to treat dissolved salt solution from other waste tanks in the future. This document evaluates only the DSS that would result from the TCCR process and is provided to support a potential DOE decision that the DSS waste stream may be disposed of as low-level waste in the SDF at SRS. This document does not address any spent media or equipment that may be associated with the TCCR process.

[9] As described in the SWD 3116 Basis Document, 2,800 kCi are associated with Interim Salt Processing and 200 kCi are associated with High-Capacity Salt Processing for a total of 3,000 kCi. It was also noted that due to uncertainty the actual curie content resulting from these salt processing phases may be higher (i.e., as high as 5,000 kCi).

5.0 REFERENCES

10 CFR 61, *Licensing Requirements for Land Disposal of radioactive Waste, U.S. Nuclear Regulatory Commission*, Washington, DC, January, 2010.

DHEC_12-17-2012, Letter from Coleman, K.M. to Whitaker, W.C., Subject: *Modified Permit for Vault 6 in Z-Area Disposal SRS ─ Z-Area Saltstone Facility, Facility ID No. 025500-1603 Aiken County*, South Carolina Department of Health and Environmental Control, Columbia, SC, December 17, 2012.

DOE_01-17-2006, Bodman, S.W., *Section 3116 Determination for Salt Waste Disposal at the Savannah River Site*, U.S. Department of Energy, Aiken, SC, January 17, 2006.

DOE-WD-2005-001, *Basis for Section 3116 Determination for Salt Waste Disposal at the Savannah River Site*, Savannah River Site, Aiken, SC, January 2006.

NDAA_3116, *Public Law 108-375, Ronald W. Reagan National Defense Authorization Act for Fiscal Year 2005, Section 3116, Defense Site Acceleration Completion*, October 28, 2004.

SRR-CWDA-2009-00017, *Performance Assessment for the Saltstone Disposal Facility at the Savannah River Site*, Savannah River Site, Aiken, SC, Rev. 0, October 2009.

SRR-CWDA-2010-00062, *Basis for the Continued Use of the Actinide Removal Process / Modular Caustic Side Solvent Extraction Unit (ARP/MCU) Salt Waste Treatment Facilities Beyond 2011*, Savannah River Site, Aiken, SC, Rev. 1, February 2013.

SRR-CWDA-2013-00147, Dean, W.B., *SDF Inventory Estimates for Transport Modeling*, Savannah River Site, Aiken, SC, Rev. 0, December 9, 2013.

SRR-CWDA-2014-00006, *FY2014 Special Analysis for the Saltstone Disposal Facility at the Savannah River Site*, Savannah River Site Aiken, SC, Rev. 2, September 2014.

SRR-LWP-2009-00001, Chew, D.P. and Hamm, B.A., *Liquid Waste System Plan*, Savannah River Site Aiken, SC, Rev. 20, March 2016.

WDPD-13-41, Letter from Smith, C. to Schlismann, D.J., Subject: *Contract DE-AC09-04SR22505, Request for Approval - Basis for the Continued Use of the Actinide Removal Process/Modular Caustic-Side Solvent Extraction Unit (ARP/MCU) Salt Waste Treatment Facilities Beyond 2011, Revision 1 (your letter, SRR-CAA-2013-00050),* Savannah River Site, Aiken, SC, March 19, 2013.

WDPD-15-15, Letter from Hepner, D.W. to Bair, J., Subject: *Contract DE-AC09-09SR22505 ─ Liquid Waste System Plan Revision 20 Additional Case (Your Letter Dated November 10, 2014),* Savannah River Site, Aiken, SC, November 2014.