G-ADS-H-00011
Revision 0

LIQUID WASTE DISPOSITION PROJECTS

Tank 48H Return to Service
Systems Engineering Evaluation (SEE)
Results Report

Westinghouse Savannah River Company LLC
Savannah River Site
Aiken, SC 29808

ENGINEERING DOC. CONTROL-SRS
00853774

DISCLAIMER

This report was prepared by Washington Savannah River Company (WSRC) for the United States Department of Energy under Contract No. DEA-AC09-96SR18500 and is an account of work performed under that contract. Neither the United States Department of Energy, nor WSRC, nor any of their employees makes any warranty, expressed or implied, or assumes any legal liability or responsibility for the accuracy, completeness, or usefulness of any information, apparatus, or product or process disclosed herein or represents that its use will not infringe privately owned rights. Reference herein to any specific commercial product, process, or service by trademark, name, manufacturer or otherwise does not necessarily constitute or imply endorsement, recommendation, or favoring of same by WSRC or by the United States Government or any agency thereof. The views and opinions or the authors expressed herein do not necessarily state or reflect those of the United States Government or any agency thereof.

APPROVAL PAGE

Prepared By:	Gavin C. Winship SPP Eng	4/13/06 Date
Reviewed By:	Renee Spires Tank 48 Project Owner	4-13-06 Date
Approved By:	Neil Davis LWDP	4/13/06 Date

Table of Contents

EXECUTIVE SUMMARY 7

ABBREVIATIONS AND ACRONYMS 8

1.0 BACKGROUND 9

2.0 PROCESS 10

2.1 SELECTION OF TEAM MEMBERS AND RESOURCES 12
2.2 TEAM CHARTER 12
2.3 IDENTIFICATION AND SCREENING 13
2.4 EVALUATION CRITERIA 18
2.5 INVESTIGATION 22
2.6 EVALUATION 22
3.0 RESULTS 22
4.0 SENSITIVITY ANALYSIS 23

5.0 RISK 23

6.0 RECOMMENDATION 28

7.0 REFERENCES 29

8.0 ATTACHMENTS 30

List of Figures

FIGURE 1 - SE EVALUATION PLAN 11

List of Tables

TABLE 1: PROCESS TECHNOLOGY SCREENING RESULTS 14
TABLE 2: PROCESS TECHNOLOGY AND LOCATION MATRIX 17
TABLE 3: SHORT LIST OPTIONS 18
TABLE 4: EVALUATION CRITERIA WEIGHTS AND DEFINITIONS 19
TABLE 5: EVALUATION CRITERIA AND UTILITY FUNCTIONS 20
TABLE 6: EVALUATION RESULTS 22
TABLE 7: RISK, RISK LEVEL AND RISK HANDLING STRATEGIES 24

Summary of Revisions

Revision Number	Date	Description of Change
0	4/13/06	Initial Issue

Executive Summary

Tank 48H currently contains 240,000 gallons of highly radioactive waste. This waste also contains about 19,000 kg of cesium and potassium tetraphenylborate. The tetraphenylborate decomposes in the radioactive environment and produces benzene. The benzene, along with hydrogen produced by the radiolysis of water, has the potential to create a flammable atmosphere inside the waste tank. This is a somewhat unique hazard in the Tank Farm and there is a strong desire to eliminate this hazard. Tank 48H is also important for two other reasons: (1) tank space is vital to supporting critical site missions that generate High Level Waste and by dispositioning the waste in Tank 48H, 1.3 million gallons of tank space are generated, and (2) the tank is ideally positioned geographically to serve as a feed preparation tank for the future Salt Waste Processing Facility and is interconnected to the other five tanks involved in Salt Waste Processing Facility feed preparation. Dispositioning the contents of Tank 48H to eliminate the flammability hazard, provide much needed tank space, and to serve as a feed preparation tank is therefore a high priority at the Savannah River Site.

Two previous Systems Engineering Evaluations have been performed (2004 and 2005) to identify technologies that could treat and/or disposition the waste in Tank 48H and return to the tank to Tank Farm service as described above. Both of those evaluations recommended Aggregation as a preferred technology for dispositioning the waste in Tank 48H and recovering the tank for Tank Farm use as well as recommending further development of two non-Aggregation alternative technologies as contingency.

The 2006 Systems Engineering Evaluation resulted in again recommending Aggregation as the preferred technology. Aggregation is a low cost and timely solution to the Tank 48H problem. However, Aggregation does result in dispositioning the radioactive material in Tank 48H within the State of South Carolina. The Team therefore also recommends further development of two alternative technologies that appear to be technically viable and result in disposing of most of the Tank 48H radioactive material in a Federal Repository as opposed to within the State. The two alternatives are small scale Wet Air Oxidation and small scale Fluidized Bed Steam Reforming. Each costs more and takes more time than Aggregation.

This report documents the results of the 2006 Systems Engineering Evaluation.

Abbreviations and Acronyms

CAB	Citizens Advisory Board
DDA	De-liquification, Dissolution and Adjustment
DNFSB	Defense Nuclear Facilities Safety Board
DOE	Department of Energy
DSA	Documented Safety Analysis
DWPF	Defense Waste Processing Facility
HLW	High Level Waste
MCU	Modular Caustic Side Solvent Extraction Unit
OWST	Organic Waste Storage Tank
RBOF	Receiving Basin for Offsite Fuel
ROM	Rough Order of Magnitude
RTS	Return to Service
SCDHEC	South Carolina Department of Health and Environmental Control
SDF	Saltstone Disposal Facility
SE	Systems Engineering
SRNL	Savannah River National Laboratory
SRS	Savannah River Site
SWPF	Salt Waste Processing Facility
TPB	Tetraphenylborate
WAO	Wet Air Oxidation

1.0 Background

Tank 48H currently contains 240,000 gallons of highly radioactive waste. This waste also contains about 19,000 kg of cesium and potassium tetraphenylborate (TPB). The TPB decomposes in the radioactive environment and produces benzene. The benzene, along with hydrogen produced by the radiolysis of water, has the potential to create a flammable atmosphere inside the waste tank. This is a somewhat unique hazard in the Tank Farm and there is a strong desire to eliminate this hazard. Tank 48H is also important for two other reasons: (1) tank space is vital to supporting critical site missions that generate High Level Waste (HLW) and by dispositioning the waste in Tank 48H, 1.3 million gallons of tank space are generated, and (2) the tank is ideally positioned geographically to serve as a feed preparation tank for the future Salt Waste Processing Facility (SWPF) and is interconnected to the other five tanks involved in SWPF feed preparation. Dispositioning the contents of Tank 48H to eliminate the flammability hazard, provide much needed tank space, and to serve as a feed preparation tank is therefore a high priority at the Savannah River Site (SRS).

The baseline process for dispositioning the waste in Tank 48H is Aggregation. This process involves aggregating the Tank 48H waste with other waste streams in Tank 50H such that the combined waste stream meets the Waste Acceptance Criteria of the Saltstone Disposal Facility (SDF). The combined stream is then transferred to the SDF where it is blended with cement, slag and flyash to form a grout mixture. The grout is then transferred to a Saltstone Vault where the grout cures to form a stable solid waste form.

The Aggregation baseline was the result of a Systems Engineering (SE) evaluation performed in early 2004. The evaluation recommended Aggregation and In-Situ Thermal Decomposition for further detailed process development and the necessary testing through Savannah River National Laboratory (SRNL) was initiated. The testing was completed in late 2005. Aggregation testing was successful. Poor test results for the In-Situ alternative led to its elimination as a viable alternative in October 2004. Since Aggregation remained as the only alternative being pursued, the re-evaluation of other alternatives was warranted.

A second SE evaluation was performed in 2005. The 2005 SE evaluation Team built upon the previous work performed on Tank 48H disposition alternative studies, literature surveys, and data developed by SRNL and other laboratories (i.e., Oak Ridge National Laboratory, Idaho National Laboratory, and AEA Technologies, Inc.). The 2005 Team again recommended Aggregation as the preferred process. The Team also recommended further development of two additional alternatives: (1) Fenton's Reagent performed Out-of-Tank followed by Aggregation of the residual material, and (2) transfer the Tank 48H waste to a Type IV tank followed by Aggregation of the material at 0.2 Ci/gal Cs-137 and 1,000 ppm TPB.

Based on the 2005 SE evaluation and the successful completion of Aggregation testing, the Tank 48H Disposition Project was formally baselined using the Aggregation process. The further development of the Fenton's alternative as well as the alternative to transfer the Tank 48H waste to a Type IV tank was also continued throughout the latter part of 2005.

By late 2005, it became apparent that the Modular Caustic Side Solvent Extraction Unit (MCU) process would be sending a waste stream to Tank 50H that contained higher than expected organic (Isopar L) concentrations and that the SDF could not handle the combined TPB and Isopar L waste stream without significant facility modifications to safely manage flammability concerns resulting from the organics. Also by late 2005, further development of the Fenton's alternative indicated that there was a significant amount of process development required to scale the Fenton's process up to the needed throughput, reconfigure the process to operate on a caustic flowsheet (as opposed to an acid flowsheet) and to handle the organic stream coming out of Fenton's. A third SE evaluation was therefore warranted.

The third SE evaluation was completed in 2006 and is the subject of this document. Aggregation is again recommended as the preferred process but with nitrogen inerting added to the Saltstone Vaults to safely handle the Tank 48H and MCU organics. Aggregation is a low cost and timely solution to the Tank 48H problem. However, Aggregation does result in dispositioning the radioactive material in Tank 48H within the State of South Carolina. The Team therefore also recommends further development of two alternative technologies that appear to be technically viable and result in disposing of most of the Tank 48H radioactive material in a Federal Repository as opposed to within the State. The two alternatives are small scale Wet Air Oxidation and small scale Fluidized Bed Steam Reforming. Each costs more and takes more time than Aggregation.

2.0 Process

A SE evaluation is a method used to select an alternative from two or more options which would be available to meet specific functions, selection criteria, and requirements. The SE evaluation process selected for this evaluation is the simplified scoring methodology as defined in Appendix A of the SE Methodology Manual (Reference 6.1).

The SE Evaluation Plan shown in Figure 1 was developed and used to guide the process to completion:

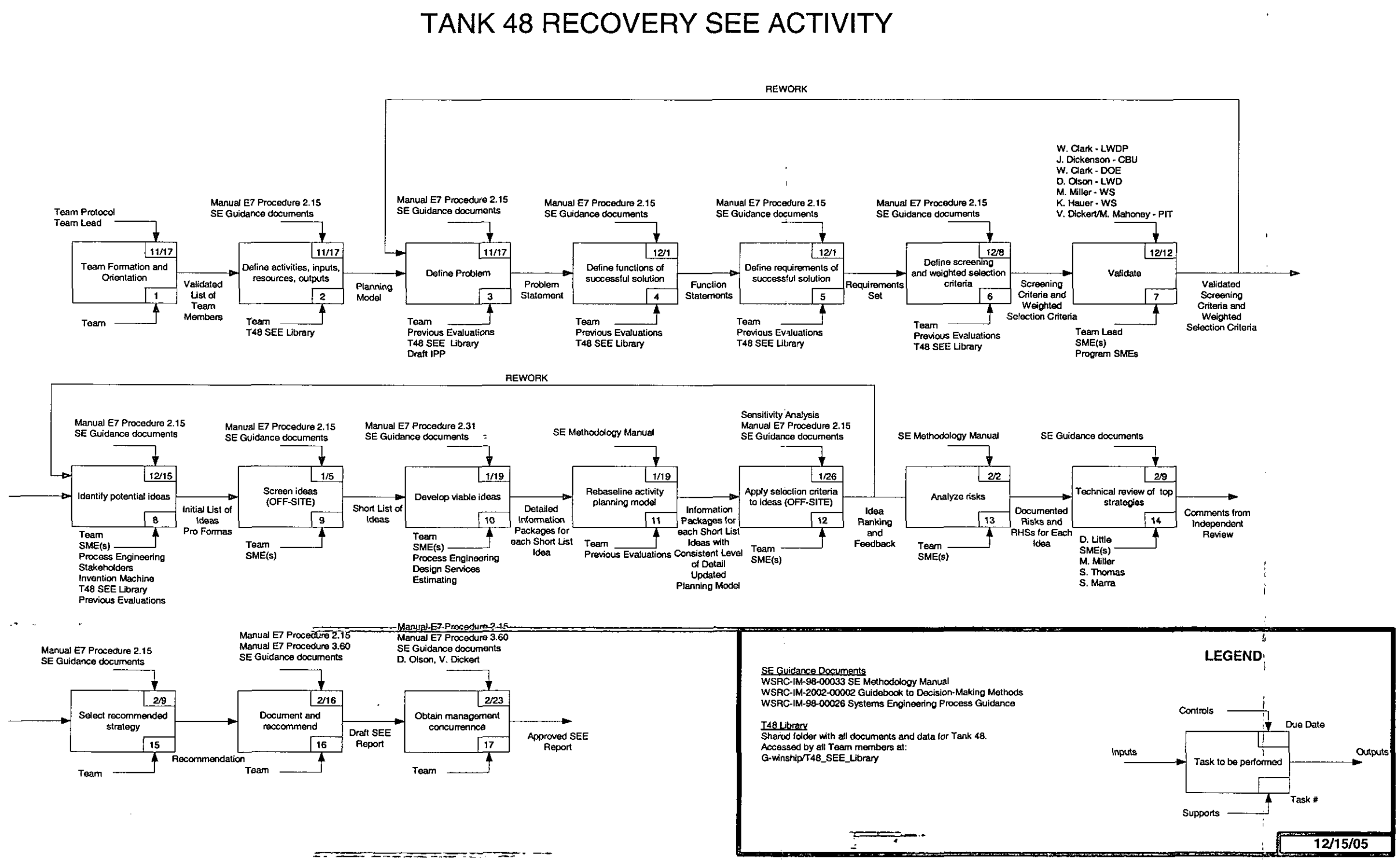

Figure 1 - SE Evaluation Plan

2.1 Selection of Team Members and Resources

The initial activity of this Study was to identify Team members and resources (Figure 1, Tasks 1 and 2). Team members were selected for their experience, expertise, and history in the planning and operation of the HLW System at SRS. This ensured that the necessary expertise was available for a knowledgeable decision. The Team initially met as a group to identify any specialty resources required during the study and any additional expertise that should be added to the Team. The validated list of Team Members was as follows:

Name	Organization
Neil Davis - Team Lead	Salt Processing Program Manager
Renee Spires	Tank 48 Project Owner
Gavin Winship - Facilitator	Salt Engineering
Larry Romanowski	Planning, Integration and Technology
Bill Wilmarth	Savannah River National Laboratory
Dan McCabe	Savannah River National Laboratory
Dennis Conrad	Salt Engineering
Andy Tisler	Salt Engineering
Paul D'Entremont	Planning, Integration and Technology
Aaron Staub	Waste Solidification Engineering

2.2 Team Charter

The first critical step in the SE evaluation was the definition of the problem (Figure 1, Task 3). The scope of the problem was defined by the Team as follows:

> **"Tank 48 contains material that prohibits its use in the HLW System; this denies the use of valuable tank space and represents a volume of material at risk in the SRS Tank Farms."**

From this problem statement, the Team was able to develop and state its charter. Team charter was decided by Team consensus to be:

> **"Define a process that dispositions the TPB so that Tank 48 can be returned to service."**

The charter was carefully worded to ensure that a solution to both critical elements, returning Tank 48H to Tank Farm service and eliminating the hazard posed by the organic waste, would be developed.

2.3 Identification and Screening

Identification and screening of options was performed in several distinct activities (Figure 1, Tasks 4-9). Using the problem definition (Section 2.2) functions, requirements and constraints were developed and assumptions made to set the boundary conditions of the problem solution. These activities resulted in a set of requirements (performance requirements and constraints) that the selected solution must meet. These were then defined by the Team as criteria (Go/No Go criteria) to be used in screening the options.

During the development of screening criteria the following assumptions were made:

1. Contract dates to disposition Tank 48 by 11/30/2006 will not be met;
2. "Disposition" may involve: decompose, destroy or disposition as a solid (e.g., grout, glass, etc.);
3. Future use of Tank 48 will be as a blending tank for future SWPF feed thus the allowable residual is ≤ 12 kg TPB and compatible with the SWPF process; and
4. Desired return to service date is June of 2010 (based on the draft Disposition Processing Plan expected to be issued August 2006).

Using the assumptions above and the input provided by the team, the following screening criteria were finalized by Team consensus:

1. Options must meet the following performance criteria:
    - Tank 48 TPB inventory shall be ≤ 12 kg and compatible with SWPF
    - Tank 48 must be ready for future use
    - All process streams associated with Tank 48 disposition shall be qualifiable for processing with existing treatment and/or waste disposal methods
2. Options will be rejected if the idea does not solve the problem (consider as an enhancement).
3. Ideas will be rejected if by Team consensus the idea is determined to be unreasonable to develop and/or implement.

After the development and finalization of the screening criteria, potential options were identified. This process of option identification was conducted in four ways:

<u>Solicitation of ideas from SRS key personnel</u> - The Team identified a list of additional personnel at SRS that, through their experience at the site, technical expertise or experience in other areas could be significant contributors to identification of ideas. These individuals were requested to review the problem background and definition and to provide a pro forma of any ideas they felt may provide a solution.

Brainstorming by the Team - The Team conducted both collective brainstorming and individual solution seeking to identify potential solutions and documented these on pro-formas.

Review of existing reports - The Team reviewed previous Tank 48 reports (References 6.2 through 6.5) and the options contained within those reports. Those options considered viable were proposed by the Team and added to the collection of pro-formas.

Use of Goldfire Innovator – During the course of this evaluation, the site procured the use of a new software package (Goldfire Innovator) developed to assist in the resolution of complex problems. While this software was not directly applicable to the Tank 48H problem, the search engines and patent search features were used to generate additional ideas not derived from the other methods.

The ideas generated from the four methods were documented on a form designed for this task referred to as a pro-forma. A total of 77 pro-formas were developed. These were called the Initial List and consisted of 77 process technology options involving 30 different process technologies deployed in a variety of existing and new locations. The Team determined that the key to this phase of the evaluation was the identification of the 30 process technologies and that an optimal location for each process technology could be determined later in the evaluation. Because of this, the 77 Initial List pro-formas are not discussed further in this document.

The 30 process technologies were extracted from the Initial List, documented as a pro-forma and then subjected to a screening criteria evaluation. The results of that evaluation are shown in Table 1 below.

Table 1: Process Technology Screening Results

Option	Title	PASS/FAIL	Comments
1.01	Use Flare Tower on Tank 48H to Destroy Benzene	FAIL	Does not solve problem Consider as enhancement
1.02	Build a New Tank	FAIL	Does not solve problem. Consider as an enhancement.
1.03	Interim Storage	FAIL	Does not solve problem. Consider as an enhancement.
1.04	Send Tank 48H liquid to Saltstone	FAIL	Does not solve problem. Consider as an enhancement.

Option	Title	PASS/FAIL	Comments
1.05	False Bottom in Tank 48H	FAIL	Tank not ready for future use.
1.1	Thermal	FAIL	Unable to meet the PR of less than 12 Kg. Consider combining with Option 1.1-3
1.10	Bioremediation	FAIL	No place to put the product, process stream is not qualifiable
1.11	Cold Cesium Metathesis	FAIL	This option is unreasonable to develop or implement as insufficient information is available.
1.12	Electrolytic Decomposition	FAIL	Waste stream not qualifiable
1.13	Alpha Radiolysis	FAIL	This does not allow Tank 48 to be available unless a type III tank becomes available for a "park option". Decomposition is very slow.
1.14	Removal of TBP by Activated Carbon	FAIL	Activated carbon waste is not qualifiable at SRS
1.15	Plasma vaporization	FAIL	Waste Stream not qualifiable
1.16	Grout w/o Aggregation	PASS	
1.17	Microwave Destruction Of Organics	FAIL	No different than thermal options
1.18	Send to DWPF	PASS	
1.19	Send Tank 48H liquid to 2H Evaporator	FAIL	Does not solve problem.
1.2	Fenton's Reagent Destruction of TPB	PASS	
1.22	Add a catalyst and decompose TPB in the 2H evaporator	PASS	
1.23	Wet Air Oxidation	PASS	
1.24	Sodium Permanganate/Acid	PASS	
1.25	Precipitate and Separate	FAIL	Process is unreasonable to implement
1.27	Extract TPB Using Isopar-L	PASS	
1.28	ZnO catalyzed Ozone Oxidation	PASS	
1.3	Acid Hydrolysis	PASS	

Option	Title	PASS/FAIL	Comments
1.4	Fluidized Bed Steam Reforming	PASS	
1.5	Aggregation	PASS	
1.51	Distribute Tank 48 Contents Among the Other Waste Tanks	FAIL	Unreasonable to implement
1.6	Send TPB slurry to Offsite vendor	FAIL	No known vendor would take liquid supernate and TPB
1.7	Using N-methyl pyrol to Solubilize TPB	FAIL	Unreasonable to develop this as it introduces a new aromatic hydrocarbon into the waste stream
1.8	Send to CIF and Restart CIF	FAIL	Not a reasonable option to develop.

A total of 11 process technologies passed the screening criteria. These were plotted against the 12 different locations as shown in Table 2 below in the form of a matrix. Where the Team determined that a process technology could be deployed in a location, an option number was assigned to the appropriate square in the matrix. Note that not every square is filled. In some cases, the process could not be deployed in the location. In other cases, a process could be deployed in an existing location thus there was no point in evaluating the same process in a new facility as the latter would cost more and score lower. With the process technologies identified and screened, the team determined the best location for a particular process technology.

Table 2: Process Technology and Location Matrix

Process/Location	In Riser	New Facility	96-H	RBOF	Canyon	CTS	DWPF	2H Evaporator	Saltstone	MCU	Type IV	Stainless Steel Containers
Grout w/o Aggregation												1.16-1
Process to DWPF							1.18-3 1.18-4					
Fentons's Reagent		1.2-3										
Catalytic Decomposition								1.22				
Wet Air Oxidation		1.23-2	1.23-1									
Sodium Permanganate and Acid		1.24-2			1.24-1							
Extract TPB using Isopar					1.27-2					1.27-1		
ZnO Catalyzed ozone Oxidation		1.28-1										
Acid Hydrolysis					1.3-3		1.3-8					
Fluidiized Bed Reforming		1.4-1	1.4-2									
Aggregation									1.26-1 1.5-2 1.5-3		1.5-5	

A total of 19 combinations were developed each of which provided a holistic solution to the Tank 48H problem. These are referred to as the Short List Options and are documented in Attachment A and shown in Table 3 below.

Table 3: Short List Options

Option #		Title
1.16	1	Park in Tank 24 and Grout In Containers
1.18	3	Park in OWST and bleed into Sludge Feed
1.18	4	Direct to DWPF in Salt-Only Glass
1.2	3	Park in Tank 24 and Fenton's in H-area Facility
1.22	2	Thermal/Catalytic - In 2H Evaporator
1.23	1	Direct Wet Air Oxidation in 96H
1.23	2	Park in Tank 24 and Wet Air Oxidation in New Facility
1.24	1	Direct Sodium Permanganate/Acid in 221-H
1.24	2	Park in Tank 24 and Sodium Permanganate/Acid in H-area Facility
1.26	1	Park at Saltstone and Aggregate
1.27	1	Park in Tank 24 and Solvent Extract TPB in MCU
1.27	2	Extract/exchange in 221-H
1.28	1	Park in Tank 24 and ZnO Catalyzed Ozone Oxidation in H-area Facility
1.3	3	Direct Acid Hydrolysis in 221-H
1.4	1	Park in Tank 24 and Steam Reforming in New Facility
1.4	2	Direct Feed to a small scale Steam Reformer in 96H
1.5	2	Direct Aggregation to Saltstone
1.5	3	Park in Tank 24 and Aggregate
1.5	5	Park in Tank 24 and Aggregate into Tanks 21-23

2.4 Evaluation Criteria

The Team developed evaluation criteria by consensus. Establishing evaluation criteria was based on the following desired criterion characteristics:

- Should differentiate among the alternatives
- Should relate to mission demands
- Should be reasonably measurable or comparable
- Should be reasonably independent of each other

A decision was made by the Team to develop evaluation criteria that met the above requirements and were important to the overall SRS mission and facility stakeholders. The Team acknowledged that external Stakeholders, e.g., SCDHEC, DNFSB, CAB, etc., would be a major influence in decision-making, however, this approach scored, ranked

and recommended options based largely on technical, quantifiable data which allowed those external Stakeholder preferences to be evaluated, if necessary after the study.

A second major consideration by the Team was that of schedule. Schedule was not used as a screening criterion by the Team. This ensured that all viable options would be identified and investigated without respect to schedule. The rationale behind this approach was to ensure that all technically viable options were evaluated. Therefore, schedule becomes a very important criterion for the evaluation phase.

The evaluation criteria were then split in to sub-criteria as necessary to facilitate scoring, weights assigned and utility functions or "guidewords" developed to further assist in scoring the options. Table 4 shows the criteria, weights and definitions. Table 5 shows the Evaluation Criteria and Utility Functions:

Table 4: Evaluation Criteria Weights and Definitions

Criterion	#	Weight	Definition
Cost	1.0	0.25	The overall cost to return Tank 48 to service and disposition the TPB.
TEC + OPC	1.1	0.17	The cost to develop the project baselines, design/build the field modifications, and turn over the completed project for radioactive operations.
Operations	1.2	0.08	The cost to operate the process from initial radioactive operations until Tank 48 has been returned to service and the TPB dispositioned, including modifications necessary to recover Tank 48 for operations.
Schedule	2.0	0.30	The overall duration to return Tank 48 to service and disposition the TPB.
Tank 48 RTS	2.1	0.20	The expected duration from the start of the project until Tank 48 is returned to service.
TPB Dispositioned	2.2	0.10	The expected duration from the start of the project until the TPB is dispositioned.
Technical Maturity	3.0	0.20	The degree to which the alternative is ready to be deployed in the destruction of TPB in a radioactive application.
Robustness	4.0	0.15	The a measure of the confidence that the alternative will perform the intended function e.g. wide control bands, tolerance to fluctuations in material composition, temp etc.
System Impacts	5.0	0.10	The degree to which the alternative is compatible with the LWD/WS flowsheet at the time of execution

Table 5: Evaluation Criteria and Utility Functions

Criterion	#	Utility Function		Value
Cost	1.0	Project	Operations	
TEC + OPC	1.1	<$33M	<$17	100
Operations	1.2	$33-50M	$17-25M	75
		$50-66	$25-33M	50
		$66-99	$33-51	25
		>$99	$>51	0
Schedule	2.0			
Tank 48 RTS	2.1	Tank 48 RTS before FY07		100
		Tank 48 RTS FY08 - FY09		90
		Tank 48 RTS by about 6/10 (e.g. FY10)		50
		Tank 48 RTS after FY10		0
TPB Dispositioned	2.2	TPB dispositioned in current contract period FY07		100
		TPB dispositioned FY08-09		75
		TPB dispositioned by about 6/10 (e.g. FY10)		50
		TPB dispositioned FY11 – FY15		25
		TPB dispositioned after FY15		0
Technical Maturity	3.0	Treatment of organic (0-100) Deployment in radioactive applications (0-100) Deployed scale (0-100) Degree of development (0-100) Total Technical Maturity = $\sum \div 4$		N/A
Robustness	4.0	Expected to easily meet the performance requirements		100
		Expected to meet the performance requirements		50
		May have difficulty meeting the performance reqmts		0
System Impacts	5.0	Minor impacts to planned critical activities/programs (<6 months)		100
		Significant delays to some planned critical activities or programs (>6 months)		50
		Prevents execution of a planned critical activity or program		0

The Team assigned the criteria of schedule the highest weight. As discussed earlier this was necessary as schedule had not been used as a screening criterion and the return to service of Tank 48H provides a great benefit to the HLW system if achieved earlier by freeing up valuable HLW tank storage capacity and introducing flexibility into the overall salt processing plan. Early processing of TPB is also desirable, however it does not bring with the same level of benefit associated with Tank 48 return to service. As the options would handle the Tank 48H return to service and the disposition of TPB at different points in their schedules, it was necessary to isolate the two criteria and weight them according to

their importance. Therefore, schedule, with the highest assigned weight of 0.3 was divided into the sub-criteria: Tank 48 return to service and TPB dispositioned which were then weighted 0.2 and 0.1 respectively.

The second highest weight of 0.25 was assigned to cost. Cost is an important criterion in that costly options could impact other critical activities and projects within Liquid Waste by reducing the funding levels for those activities. Cost, as with schedule, comprised of more than one element. Project cost and operating cost were established as sub-criteria. Project cost was judged to be the more important of the two as near term funding in today's tight budgets continues to drive decisions. Operating costs also captured the impact of the alternative on life cycle. Project cost and operating cost were therefore weighted 0.17 and 0.08 accordingly.

The third highest weight was assigned to technical maturity. A high degree of technical maturity increases the probability of successful deployment and oepration. Technically immature processes have historically failed at great expense in the commercial industry as well as the government sector. Processes requiring research, development and piloting have also historically demanded more intensive efforts than originally anticipated to reach a deployable design state. Technical maturity therefore was assigned a weight of 0.20, just below that of cost. Technical maturity was also determined to have four distinct elements: treatment of organic; deployment in radioactive applications; deployed scale and degree of development. These were given equal weight, scored from 1-100, and their total score divided by four before applying the overall weighting factor.

The remaining criteria of robustness and system impacts were assigned weights of 0.15 and 0.10 respectively. Lack of robustness could result in the process creating an unqualifiable waste stream when challenged by feed composition fluctuations. The options being considered are all assumed to be compatible with the existing SRS waste processing and disposition systems through application of the screening criteria and would have limited system impact. Robustness and system impacts were assigned weights of 0.15 and 0.10 respectively by the Team.

These criteria and assigned weights were reviewed by the internal stakeholders and validated prior to completion of the evaluation and scoring process.

2.5 Investigation

Upon completion of the screening, the 19 options were further investigated. The investigation was targeted at producing data for each option that related to the evaluation criteria. The Team decided to perform the evaluation of the options before the documenting risk in detail. This allowed the Team to focus their risk assessment activities on only the top scoring options.

2.6 Evaluation

The evaluation of the options against the selection criteria was performed using a simplified scoring methodology.

The Team reviewed each option against the selection criteria and scored the candidate based on the guidance words in Section 2.4.

The scores were then multiplied by the weighting factors of each criterion and then totaled for each option to obtain a final score. The final score allowed the options to be ranked.

3.0 Results

The scoring of the options for each criterion is shown in Attachment B. In summary the scoring resulted in the ranking shown in Table 6:

Table 6: Evaluation Results

Option		Description	Score
1.5	2	Direct Aggregation to Saltstone	**91**
1.5	3	Park in Tk 24 and Aggregate	**79**
1.4	2	Direct Feed to small scale Steam Reforming Process in 96H	**77**
1.23	2	Park in Tk 24 Wet Air Oxidation in New Facility	**76**
1.3	3	Direct Acid Hydrolysis in 221-H	**75**
1.5	5	Park in Tk 24 and Aggregate into Tks 21-23	**74**
1.27	2	Exchange/Extract in 221-H	**73**
1.4	1	Park in Tk 24 and Steam Reform in New Facility	**72**
1.23	1	Direct Wet Air Oxidation in 96H	**72**
1.24	1	Direct Sodium Permanganate/Acid in 221H	**72**
1.16	1	Park in Tk 24 and Grout in Containers	**68**
1.18	3	Park in OWST and Bleed into Sludge Feed	**68**
1.18	4	Direct to DWPF Salt-Only Glass	**64**
1.27	1	Park in Tk 24 Solvent Extract TPB in MCU	**64**

Option		Description	Score
1.24	2	Park in Tk 24 NaMNO4/Acid In H-Area Facility	63
1.26	1	Park at Saltstone and Aggregate	61
1.2	3	Park in Tk 24 Fenton's in H-Area Facility	61
1.22	2	Thermal/Catalytic – In 2H Evaporator	50
1.28	1	Park in Tk 24 ZnO Catalyzed Ozone Oxidation in H-Area	48

4.0 Sensitivity Analysis

The sensitivity analysis was performed on the selected options to determine if changes in the weighting of selection criterion could alter the final ranking (prioritization).

This was performed by taking a selected criterion, incrementally increasing its weight, proportionally reducing the weights of the other criteria accordingly and re-computing the final score for all the candidates. This was done for all criteria for 10%. 25%, 50% and 100% increases.

The results of the sensitivity analysis showed that altering any of the weights by 10% - 100% did not significantly change top group of options. For all weight changes analyzed, the top-ranked option of Direct Aggregation to Saltstone remained the top-ranked option with Steam Reforming and Wet Air Oxidation processes consistently remaining within the top group of options.

5.0 Risk

The Team further investigated the top 9 scoring options by performing a risk identification and assessment. The Team came to a consensus on the risk level based on the unmitigated consequences of the individual risk with respect to cost and schedule and developed risk handling strategies for the medium and high risks. Table 7 shows the risks, risk level and proposed risk handling strategies for the 9 options:

Table 7: Risk, Risk Level and Risk Handling Strategies

#	Process	Risks	Risk Handling Strategies
1.5-2	Aggregate with MCU	**H--Stakeholders may object to Ci to Saltstone or delay DDA permit** M--Saltstone modifications may more expensive than anticipated ($5M) M--Grout may fail TCLP M--Contamination from positive pressure inerting may require sealing or cause other problems	• **Work with stakeholders to understand objections and explain benefits** • Develop ROM estimate • Experiments to gain info • Test vaults for leaks—mitigate as appropriate
1.3-3	Acid Hydrolysis in 221H	**H--221H treatment permit creates other regulatory issues thus delaying 221H mission (>1 yr, assumed cost is $100M/yr)** M--Interferes with 221H mission more than expected (>1 yr) M--New contract structure after rebid creates conflicting priorities (>1 yr delay)	• **Work with regulators to obtain a permit limited to tetraphenylborate mission** • Careful coordination with canyon campaigns • Attempt to obtain clear direction from DOE customers
1.23-1	Wet Air Oxidation in 96H	M--Process may not completely destroy 1PB & 2PB M--Off-gas handling might require modifications to 96H ventilation system (>5$M) M--Consequence of pressure vessel rupture at high temperatures may be higher than anticipated L--Equipment may be too large for 96H	• Experiments to gain info • Experiments to gain info • Perform DSA early enough to guide design • Accept risk

#	Process	Risks	Risk Handling Strategies
1.27-2	Solvent Extraction in 221H	**H--Cost of spent solvent disposal higher than expected (>$30M)** **H--221H treatment permit creates other regulatory issues thus delaying 221H mission (>1 yr)** M--Can't find a suitable solvent M--Cost of solvent higher than expected (>$15/gal) M--Interferes with 221H mission more than expected (>1 yr) M-- New contract structure after rebid creates conflicting priorities (>1 yr delay)	• **Investigate solvent disposal options—perhaps negotiate a contract with waste processor** • **Work with regulators to obtain a permit limited to tetraphenylborate mission** • Experiments to gain info • Accept risk • Careful coordination with canyon campaigns • Attempt to obtain clear direction from DOE customers
1.5-3	Park and aggregate	**H--Stakeholders may object to Ci to Saltstone** **H--Stakeholders may object to use of type IV tank** M--Saltstone modifications may be more expensive than anticipated ($5M) M--Grout may fail TCLP M--Contamination from positive pressure inerting may require sealing or cause other problems M--Cost of transfer and storage are greater than anticipated L--Transfer from Tank 24 to new SPF feed tank more complicated than anticipated	• **Work with stakeholders to understand objections and explain benefits** • Develop ROM estimate • Experiments to gain info • Test vaults for leaks—mitigate as appropriate • Accept risk • Accept risk

#	Process	Risks	Risk Handling Strategies
1.5-5	Park and aggregate in Tanks 21 through Tank 23	**H--Stakeholders may object to Ci left in SC** **H--Stakeholders may object to use of type IV tank for storage** M--HVAC modifications may be required in Tanks 21 to 23 M--Grout may fail TCLP M--Stakeholders may object to using waste tanks for LLW disposal M--Cost of transfer and storage are greater than anticipated M--The extra radionuclides introduced into Tanks 21 to 23 may impact Tank Closure Performance Assessment	◦ **Work with stakeholders to understand objections and explain benefits** ◦ Plan pour rates slow enough to eliminate concern ◦ Experiments to gain info ◦ Work with stakeholders to understand objections and explain benefits ◦ Accept risk • Investigate impact on Tank Closure Performance Assessment
1.4-1	Park and steam reform	**H--Stakeholders may object to use of type IV tank** **H--Adapting process to high-rad environment may be more difficult than anticipated because of process complexity** M--Cost of transfer and storage are greater than anticipated M--Solids disposal may require more DWPF cans than anticipated (>10 to 20 cans) M--Transferring solids to DWPF may be more difficult than anticipated (especially solids handling equipment)	◦ **Work with stakeholders to understand objections and explain benefits** • **Begin design early** • Accept risk • Experiments to gain info • Experiments to gain info
1.4-2	Steam reform in 96H	**H--Adapting process to high-rad environment may be more difficult than anticipated because of process complexity** M--Cost of transfer and storage are greater than anticipated M--Solids disposal may require more DWPF cans than anticipated (>10 to 20 cans) M--Transferring solids to DWPF may be more difficult than anticipated (especially solids handling equipment)	• **Work with stakeholders to understand objections and explain benefits** • **Begin design early** ◦ Accept risk • Experiments to gain info • Experiments to gain info

#	Process	Risks	Risk Handling Strategies
1.23-2	Park and Wet Air Oxidation	**H--Stakeholders may object to use of type IV tank** M--Process may not completely destroy 1PB & 2PB M--Off-gas handling might be more complicated than anticipated M--Consequence of pressure vessel rupture at high temperatures may be higher than anticipated M--Cost of transfer and storage are greater than anticipated	◦ **Work with stakeholders to understand objections and explain benefits** ◦ Experiments to gain info ◦ Experiments to gain info ◦ Perform DSA early enough to guide design ● Accept risk

6.0 Recommendation

The Team recommends that the current baseline option (Option 1.5-2, Direct Aggregation to Saltstone) be continued while pursuing the development of two additional options as a contingency. The current baseline option has been shown to be the most technically sound option, one of the least expensive options, and it consistently scored well in all categories thus demonstrating a high level of confidence in its success. However, Aggregation does result in dispositioning the radioactive material in Tank 48H within the State of South Carolina. The Team therefore also recommends further development of two alternative technologies that appear to be technically viable and result in disposing of most of the Tank 48H radioactive material in a Federal Repository as opposed to within the State. The two alternatives are small scale Wet Air Oxidation and small scale Fluidized Bed Steam Reforming. Each costs more and takes more time than Aggregation.

The Team recommends that the Steam Reforming option (Option 1.4-2, Direct Feed to a Small Scale Steam Reformer in 96H) continue to be developed as a contingency to Aggregation. Steam Reforming was considered to be a viable option in this SE evaluation as well as previous SE evaluations based on the amount of testing already performed using Tank 48H stimulant waste and based on the ongoing radioactive waste treatment facility operation at Erwin, TN. The drawback for Steam Reforming in the past was up front project cost and operating cost. The cost estimate used in this SE evaluation is much less than in the past. This was made possible for two reasons: (1) the need date for returning Tank 48H to Tank Farm service is much later than assumed in previous SE evaluations based on the current forecast of tank space, and (2) the extended need date enables a lower throughput rate for the Steam Reforming process. The lower throughput means a smaller "footprint" for the plant such that an existing building can now be used to house the Steam Reforming equipment. The building of choice is 241-96H which is about 30 feet away from Tank 48H. This building provides adequate containment as well as most of the infrastructure and supporting services needed by Steam Reforming. This option is based on duplicating the design of the existing Steam Reforming test facility at Hazen, CO which is a 0.25 gpm unit. This will reduce project cost and improve the schedule.

The Team also recommends that the Wet Air Oxidation process (Options 1.23-1 and 1.23-2) continue to be developed as a contingency to Aggregation. Wet Air Oxidation (WAO) was tested with simulant and real waste for application at the DOE Hanford facility. The WAO process is currently being operated at over 200 facilities worldwide to treat a wide variety of hazardous organic waste streams. The WAO equipment is similar in size to the 0.25 gpm Steam Reforming equipment thus this process can also be installed in the 241-96H building. WAO has not been tested with Tank 48H real or simulant waste thus this technology is not as mature as Steam Reforming, however, WAO appears to be a simple

process with few unit operations and no solids handling thus it warrants further development in the opinion of the Team.

While some of the options that involved transferring the Tank 48H contents to a Type IV tank and dispositioning the waste later scored high, the Team does not recommend further development of those options at this time. The transfer of this waste stream to a Type IV tank is attractive in that Tank 48H is recovered in a timely fashion; however, there are several negative attributes to these options:

- The "footprint" of the organic issues is expanded;
- A Type IV tank, while technically and structurally sound, is a non-compliant tank;
- The cost of the transfer system and the flammability control modifications needed on the Type IV tank is expensive ($15 million); and
- Some key stakeholders are opposed to the use of a non-compliant tank for this service.

If significant issues arise during further development of the Steam Reforming and Wet Air Oxidation options, then transferring the contents of Tank 48H to a Type IV tank may be revisited at that time.

7.0 References

7.1 WSRC-IM-98-000033, Systems Engineering Methodology Guidance Manual, Appendix A, Alternative Studies, Revision 1, February 13, 2001.

7.2 CBU-PED-2003-00014, Technical Program Plan for Tank 48 Processing, Revision 0, September 2003.

7.3 CBU-PIT-2005-00147, Re-Evaluation of Tank 48H Disposition Alternatives, Revision 0, July 20, 2005.

7.4 G-ADS-H-00007, CBU, LWDP, Salt Processing Projects, Tank 48 Disposition Project, WSRC In-House Treatment Option Evaluation, Revision 0, February 4, 2004.

7.4 WSRC-RP-2002-00154, HLW Tank 48H Disposition Alternatives Identification, Phase 1 & 2, Summary Report, Revision 1, July 15, 2002.

8.0 Attachments

Attachment A – Short List Pro Formas
Attachment B – Scoring Results

Attachment A – Short List Pro-Formas

Tank 48 SEE

Idea Pro-Forma

Category	Type IV Tank & New Facility	**Date**	1/24/2006
Alternative #	1.16 - 1	**Phone**	8-2980
Originator	Neil Davis	**Dept**	LWD-Salt

Title

Park in Tank 24 and Grout In Containers

Description

General - Transfer Tank 48 waste to Tank 24. Store in Tank 24. Build new grout plant near Tank 24. Feed Tank 24 to the new plant and place resultant grout into drums that can be transported to WIPP via the TRUPACT III shipping container.
Transfer to Tank 24 - install new pump in Tk 48 C-1 riser, use existing transfer lines and jumpers Tk 48 to HDB-7 to HDB-8 to HDB-5 to Tk 24. This will require a DSA change, new procedures and training and admin controls to prevent inadvertent transfer and leaks to diversion box sumps. Expected transfer volume is about 500 kgal including Tank 48 rinse water.
Storage - Waste will be stored 1-3 years until a new grout plant is ready. Liquid mixing will be required to periodically remove retained benzene. Assume two slurry pumps. Vapor space monitoring and mixing will be required. Assume recirc fan and benzene analyzers per recent Tank 50 design. Assume a new shielded above grade transfer line to the new grout plant.
Grout Plant - a new shielded modular plant is needed with cold chemical supply system for cement, slag, fly ash and other additives. About 500 kgal of waste will become 850 kgal of grout or 17,000 drums. Assume rate is 50 gpm, 5 days per week. The grout mixer could be emplaced in a nearby unused shielded cell such as the new CTS pit. The containers could be filled in the old CTS pit, lifted out by crane and placed in the TRUPACT. Assume 11 drums per TRUPACT or 1,500 shipments.

Advantages

* No new technology involved
* Tank 48 recovered FY09
* Tank 48 Curies not dispositioned in State of SC

Disadvantages

* Cost - upfront cost will be about $19M, ops cost about $42M
* Process Safety - DNFSB will not support storing Tank 48 waste in a non-compliant tank.
* Operations - significant material handling for grouted containers.
* Schedule - waste not dispositioned until FY17

Pass/Fail PASS

Comments

Tank 48 SEE

Idea Pro-Forma

Alternative #1.16-1 **Process Diagram (Optional)**

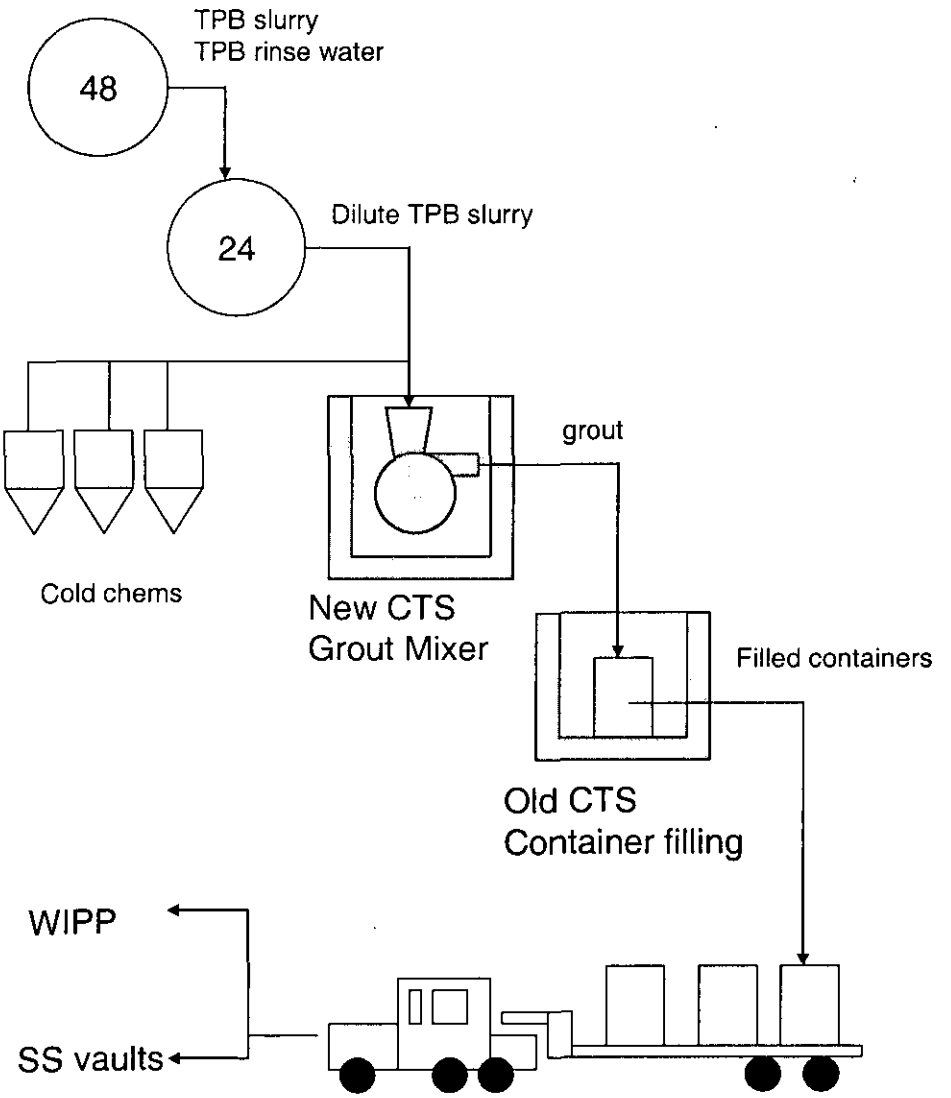

Tank 48 SEE

Idea Pro-Forma

Cost

Upfront Project Cost
* transfer to Tank 24 assume $2M for procedures, training, DSA mods and comp measures
* storage in Tank 24 assume $12M for liquid and vapor space mixing and monitoring
* new modular grout plant with cold chemical support facilities and mods to old and new CTS pits to accomodate new equipment and operations assume $20M

Operations
* labor assume a new dedicated staff for 7 years of operations 4, maintenance of 2, RadCon of 2, R&HE of 4 for labor of $7M ($80k/FTE x 12 FTE x 7 yr = $6.7M)
* cold chems assume $5/gal for 500 kgal or $2.5M
* equipment rental of crane, truck, trailer for 7 years assume $2.5M
* shipping assume 1,500 shipments at $20k each or $30M

Total cost $34M + $42M = $76M

Schedule

FY06
*develop conceptual design and estimate
FY07
*develop and approve safety strategy, * obtain regulatory and stakeholder support, * detailed design for Tank 24 an grout plant, and * start procurement of engineered equipment
FY08
*complete design, * initiate construction
FY09
* complete construction, *transfer waste to Tank 24
FY10-17
* fill containers 11 per day, 55 per week, 2,500 per year for 7 years
Tank 48 Return to service FY08-09

Technical Maturity

Transfer - this will be tricky in DSA space but is considered "doable" by the transfer engg COG
Storage - very mature based on 15 years of actuals in Tank 48 and new design for Tank 50 that will be applied to Tank 24
New Grout Plant - should be a straight forward package unit with some modifications to adapt it to a shielded application
Container Filling - significant material handling but no R&D required. Control of intermittent operation, line flushing, flush water handling are engineering issues to be worked out. May need to vent each container with a car vent. This may require some R&D.
Transport to WIPP - impact on WIPP unknown, transportation requirements unknown, may need more TRUPAC III containers

Alternative # 1.16 - 1

Tank 48 SEE

Idea Pro-Forma

Robustness

Very robust. Grouting the waste is the baseline process.

System Impacts

* minor impacts during transfer from Tk 48 to Tk 24
* minor impacts during drum filling
* major impacts to WIPP likely due to 17,000 drums and 1,500 individual shipments

Risks

* DNFSB and SCDHEC may not support storage of Tank 48 waste in Tank 24
* Developing a method of venting containers may be more expensive than expected
* Transportation requirements and approvals may be more difficult and time consuming than expected
* TPB grout will pass TCLP test but may not meet intent of the test if benzene leaches out of the grout after the 30 day test is conducted.

Alternative #1.16-1

Tank 48 SEE

Idea Pro-Forma

Additional Comments

1) TRUPACT III container is 5 x 5 x 8 ft. This will hold 11 drums in a single layer.
2) TRUPACT III has no shielding. Fastening the lid involves securing > 50 fasteners. May be rad exposure proble
3) Sending the containers to WIPP seems very troublesome and expensive. The $20 k per shipment is a guess. W would only do this if SCDHEC prohibits adding this 800,000 Ci to the Saltstone vaults.
4) Heat loading per drum should be low. Cs-137 produces about 0.003 watts/Ci.

Alternative # 1.16 - 1

Tank 48 SEE

Idea Pro-Forma

Category	Type IV Tank & DWPF	**Date**	2/1/2006
Alternative	#1.18 - 3	**Phone**	
Originator	Aaron Staub	**Dept**	

Title

Park in OWST and bleed into Sludge Feed

Description

General - Volume reduce contents of Tk 48 in-situ using microfiltration. Send "clean" filtrate to Saltstone via Tk 50. Move concentrated precipitate from Tk 48 to the CIF OWST.
Volume Reduce - Install equipment in Tank 48 to pump the waste into a microfilter. Send the filtrate to Tk 50 via a new above grade transfer line. Return the precipitate to Tk 48. Continue until a volume of <<150 kgal has been achieved. The filter will require backpulse capability. The filtrate will need an inline gamma monitor.
Transfer - Install a new pump in the Tk 48 C-1 riser. Use existing transfer lines from Tk 48 to HDB-7 to Tk 51 valve box, to LPPP to south of DWPF. Install new tie-in and line segment to get to OWST.
Storage - OWST is 150 kgal. It is currently OOS. Would require refurbishment and shielding. OWST has nitrogen blanket equipment except liquid nitrogen tanks. Foam fire suppression system available. Assume soil on sides and lead on domed roof. Roof would require structural support.
Bleed into DWPF - requires new line segment from OWST into 210-S. Below grade shielded. About 30 lbs of TPB is added to each SRAT batch from the OWST. This will require extensive mods to the purge offgas system.

Advantages

* recovers Tk 48 by FY10
* Tk 48 Ci disposed of as glass

Disadvantages

* TPB not dispositioned until end of life cycle (~ FY30)
* finishing by FY30 requires increasing the disposition rate by means unknown at this time
* reaction rates when combined with the regular sludge stream may overwhelm flammable gas generation

Pass/Fail PASS

Comments

Tank 48 SEE

Idea Pro-Forma

Alternative #1.18-3 **Process Diagram (Optional)**

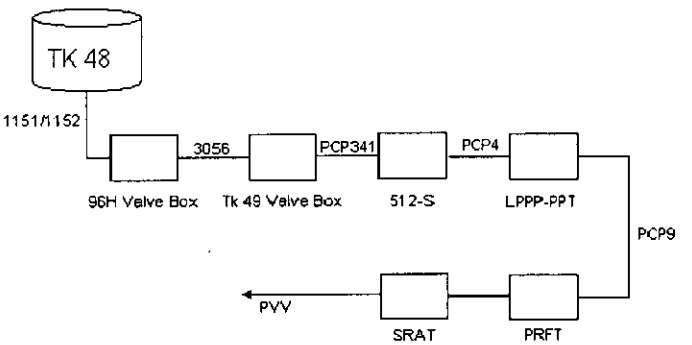

Tank 48 SEE

Idea Pro-Forma

Cost

Upfront Project Cost
* $5M for installation of additional safety class nitrogen tanks, assuming sufficient purge flow is acheiveable
* $2M for transfer system mods between Tk 48 and the OWST
* $2M for 210-S flowsheet/processing R&D, DSA development
* $10M to recreate in tank filtration equipment in Tk 48 similar to the 1983 ITP process demonstration
* $0.5M to qualify new waste glass.
* $15m to shield OWST
* $5M to run underground line
* $2M DSA and procedure training

Operations Cost
* based on 1 additional operator at DWPF on each shift FY10-FY30 ($80 k/FTE/yr x 1 FTE x 20 yrs = $6.4M
* based on 1 additional operator and RCO at HTF on each shift FY09-FY10 ($80 k/FTE/yr x 2 FTE x 2 yrs = $1.3M

Total Cost = $42M + $7.7M = $49.7M

Schedule

FY06 *develop conceptual design and estimate
FY07 *develop and approve safety strategy, * obtain regulatory and stakeholder support, * detailed design for OWST and DWPF HVAC mods, and * start procurement of engineered equipment
FY08 *complete design, * initiate construction
FY09 * complete construction, *start volume redeuction of TPB in Tk 48
FY10 * complete volume reduction, * transfer waste to OWST
FY11-end of HLW life cycle * bleed in 30 lbs TPB per SRAT batch for 31 years

Tank 48 return to service by FY10

Technical Maturity

Some flowsheet work is likely required, but the largest uncertainty surrounds the flammability control of the CPC vessels. The purge system may not be capable of diluting the amount of benzene described above, which would ma inerting/MOC control the more viable flammability control. This would be essentially prohibitive to implement given the cost of retrofitting the CPC vessels and equipment with features intended to make them leaktight.

Alternative # 1.18 - 3

Tank 48 SEE

Idea Pro-Forma

Robustness

The process of generating benzene through boiling TPB and exhausting it is straightforward.

System Impacts

The method of flammability control in the DWPF represents a significant impact. The use of a purge system significantly limits the amount of benzene that can be processed in a given batch, and as a result the time to dispose all the TPB is long. A philosophy change in flammability control could potentially greatly increase the rate of benzen disposal, but represents a significantly more costly scenario than presented here

Risks

* The impact to the chemical process is expected to be small, and all of the benzene should exit the facility through ventilation system so the risk to the melter is small
* The amount of nitrite going to DWPF is not reduced in this option. Nitrite is expected to produce "tar-like" compounds that may build in the HVAC train. It is not known how big of an issue this is.
* Condenser must be run in a way to prevent condensing offgas

Alternative # 1.18 - 3

Tank 48 SEE

Idea Pro-Forma

Additional Comments

This pro forma assumes that given some significant modification to the purge system, DWPF is able to accomodat up to 30 lbs of equivalent benzene in each SRAT batch. Given that the DWPF processes approximately 45 SRAT batches per year, the annual removal capacity of Tank 48 TPB would be 1350 lbs. With 19000 kg, or 42000 lbs, of TPB to destroy it would require 31 years of processing to remove the Tank 48 waste.

The transfer path described currently exists and only minor modifications would be required. Cost and schedule are inversely related for implementation of this alternative. In order to minimize the cost, only small amounts of TPB ca be metered into the DWPF process for a given SRAT batch. X-CLC-S-00145 demonstrated that only 250 ppm TPI could be fed to the SRAT during processing with current purge limitations. Under such a strategy a SRAT batch would be limited to about 5.1 lbs of benzene. Larger quantities of benzene could probably be tolerated, but only by significantly increasing the purge capacity of the Safety Nitrogen System.

Alternative #1.18 - 3

Tank 48 SEE

Idea Pro-Forma

Category	Type IV Tank & DWPF	**Date**	
Alternative	#1.18 - 4	**Phone**	
Originator	Aaron Staub	**Dept**	

Title

Direct to DWPF in Salt-Only Glass

Description

Feed from Tank 48H through the ARP flowpath to the DWPF melter for TPB destruction and incorporation into a glass canister. Do not feed the normal sludge while destroying the TPB material.

Process Flow:

Feed TPB slurry from Tank 48 through the 96H valve box to Tank 49 valve box and down to Precipitate Tank at 512-S in 4k gallon batches. The material could be concentrated to 10 wt% or transferred directly to the PRFT in DWPF via the LPPP. The PRFT will serve as a feed tank for Tank 48 waste to the SRAT. This process would have to run without boiling to avoid benzene evolution in the Chemical Process Cell. Filtrate from 512-S to be processed at Saltstone.

Advantages

1. Melter assumed to completely destroy organics
2. Avoid acid hydrolysis and benzene generation

Disadvantages

1. Opportunity cost of extending DWPF life cycle
2. Precludes ARP/MCU operations
3. Chemical process has not yet been evaluated for technical adequacy

Pass/Fail PASS

Comments

Tank 48 SEE

Idea Pro-Forma

Alternative #1.18-4 **Process Diagram (Optional)**

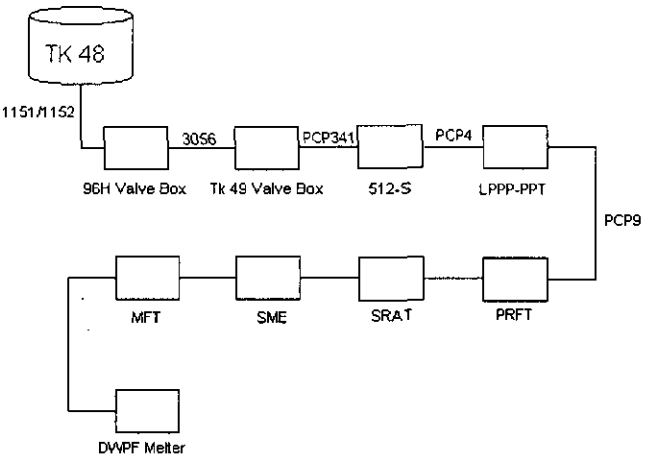

Tank 48 SEE

Idea Pro-Forma

Cost

Upfront Project Cost
* transfer to DWPF assume $2M for procedures, training, DSA mods and comp measures
* Flowsheet development assume $1M for waste qualification
* Dry feed R&D and implementation for frit addition to SME- $20M
* Decon R&D for dry decontamination of canisters- $10M
* Tank 48 Modifications - $2M
* ARP Modifications - $2M

Operations
* Assume a 6 month DWPF sludge outage with cost based $100M annual operating cost
* Assume cold chemical, misc. equip cost, etc..
* Disposal cost of 25 additional DWPF canisters

Total cost $37M + $162.5M = $199.5M
The transfer path described currently exists and only minor physical modifications would be required. It is unknown whether any safety or process modifications at DWPF would be required for this alternative. The opportunity cost to ARP/MCU is not reflected and it is assumed that the waste not processed by MCU during this time would be processed later by SWPF.

Schedule

FY06
*SRNL feasibility studies- SRNL resource issue
FY07
*develop safety strategy, * develop process flowsheet, * design process modification to frit systems
FY08
*complete and approve safety strategy, *procurement of cold chemicals (new frit, simulated sludge) * implement of process mods
FY09
*ARP/MCU/ESP outage * DWPF processing * Saltstone processing
It should be noted that additional transfer line modifications are planned for SWPF which would reroute PCP341 to bypass 512-S and tie into PCP4 directly. This would eliminate the most straightforward transfer scenario for this alternative when implemented.

Technical Maturity

Transfer - straightforward provided that Tank 48 is available as a feed tank. Modification to transfer system may necessary if TPB is parked elsewhere
Filtration - mature technology based on ITP flowsheet and ARP operations
DWPF Chemical Processing - proposed process is significantly different than that currently operated at DWPF. Feasibility studies needed to determine whether a suitable melter feed is achievable given process constraints.
Dry Frit Addition - Conceptual design for pneumatic transport at SRNL. Scale up/implementation uncertainty
Dry Decon - Preconceptual design was tested in late 1990s and failed. New research required.
Canister Filling - significant experience based on 10 years of DWPF operation. Some validation at SRNL necessar assuming an acceptable melter feed is produced.

Alternative #1.18-4

Tank 48 SEE

Idea Pro-Forma

Robustness

The melter would be expected to completely destroy any organics fed to it, provided it is not overwhelmed. The on remaining material would then be found in the numerous tank heels along the Tank 48 to DWPF transfer path.

System Impacts

*Extends life of DWPF if no sludge processing is being conducted
*Precludes operation of ARP/MCU if the 512-S/LPPP transfer path is utilized
*Sludge batch preparation issues if Tank 40 is not being emptied?

Risks

*Flowsheet development/frit handling may not be possible
*CHAP process may identify new safety controls requiring new safety equipment

Alternative # 1.18 - 4

Tank 48 SEE

Idea Pro-Forma

Additional Comments

Alternative #1.18 - 4

Tank 48 SEE

Idea Pro-Forma

Category	9.0 Type IV Tank & Modified Facility	**Date**	1/24/2006
Alternative #	1.2 - 3	**Phone**	5-8238
Originator	Dan McCabe	**Dept**	

Title

Park in Tank 24 and Fenton's in H-Area Facility

Description

Transfer Tank 48 contents to Type IV tank for storage; including Tank 48 rinse water. Modify H-area facility for optimum Fenton's conditions. Resulting release of offgas is treated through the modified ventilation system. Treated salt solution returned to Tank Farm.

Process Flow

Transfer from Type IV tank to modified facility in ~5000 gallon batches. Add catalyst; adjust pH with acid; heat vessel to 100 °C; add peroxide. TPB decomposes, generating benzene and carbon dioxide. Assume 4 day reaction time. Benzene will be exhausted in the offgas stream and vented to the atmosphere via the modified off-gas system. Treated waste can be sampled and transferred to Tank Farm. (Fate of MST undefined) Assume volume increase is 2X and MOC control using nitrogen.

Advantages

1. No untreated waste to Saltstone
2. No new facility (modify existing)

Disadvantages

1. Process may take too long - Assume reuse existing tank with a working capacity of 5,000 gal, at 1 batch/week, 50 weeks to process all waste; plus rinse water
3. Wall film in Tank 48 may not rinse off
4. Resolutions of tarry substances in product stream
5. Resolution of biphenyl in offgas system
6. Peroxide handling and cost
7. Unknown chemistry
8. High R&D cost

Pass/Fail PASS

Comments

Tank 48 SEE

Idea Pro-Forma

Alternative #1.2 - 3 **Process Diagram (Optional)**

Type IV; Fenton's Process Diagram

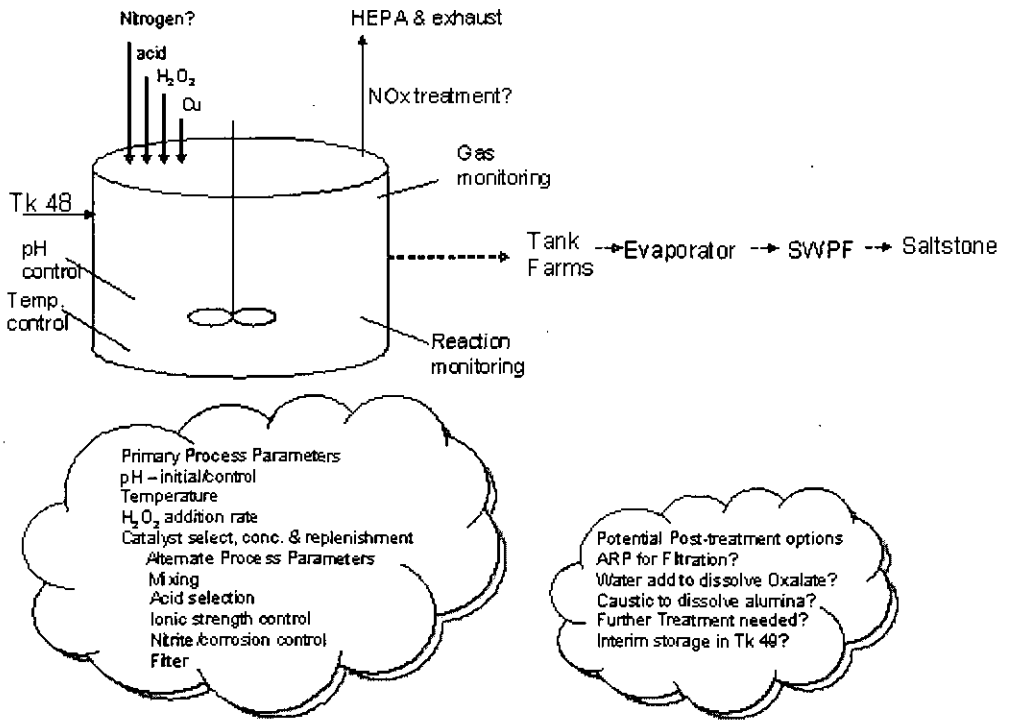

Tank 48 SEE

Idea Pro-Forma

Cost

Upfront Project Cost
* transfer to Tank 24 assume $2M for procedures, training, DSA mods and comp measures
* storage in Tank 24 assume $12M for liquid and vapor space mixing and monitoring
* Design activities assume $10M (tanks, mixers, heat exch., ventilation, DSA changes, permits, etc)
* modified plant with cold chemical support facilities assume $20M
* R&D $2.5M

Operations
* labor assume a new dedicated staff for 3 years of start-up, operations (24/7) 4, maintenance of 2, RadCon of 2, Lab of 2, R&HE of 4 for total labor of $10M ($80k/FTE x 14 FTE x 3 shifts x 3 yr = $10M)
* cold chems assume $10/gal for 0.5 Mgal or $5M (peroxide, nitrogen, acid, caustic, catalyst, HEPAs)
* Saltstone cost for product $2M (assume product is concentrated to 500 kgal)

Total cost $46.5M + $17M = $63.5M

Schedule

FY06
R&D - narrow operating window
Conceptual design parameters
FY07
R&D - optimize operating conditions; initiate excursion tests
Preliminary design parameters; integration plan evaluation; select disposal path
FY08
R&D - Perform engineering tests; continue excursion tests
final process condition selection; final design; preliminary CHAP; preliminary cost estimate; initiate construction
FY09
complete construction;
FY10 - 13
Cold run-in and hot operations

Tank 48 return to service by FY09

Technical Maturity

Transfer - this will be tricky in DSA space but is considered "doable" by the transfer engg COG
Storage - very mature based on 15 yrs of actuals in Tk 48 and new design for Tk 50 that will be applied to Tk 24

Process - Low - Fundamental effectiveness demonstrated with simulant at small scale. Safety and operability issue identified. Significant safety and operability R&D required. Not demonstrated with radioactive material. Minimal onsite experience with hydrogen peroxide handling. Process control and analysis requirements not defined Offgas requirements complex. Regulatory approval for release of benzene not assured.

Alternative # 1.2 - 3

Tank 48 SEE

Idea Pro-Forma

Robustness

Low - No radioactive testing performed to date; scale up issues with foam and heat transfer; co-generation of oxyg and flammable vapors with no quench method will require complex interlocks and short response time; peroxide dangers; offgas pluggage problems observed at small scale and expected at large scale;

System Impacts

Potential organic byproducts in aqueous phase (Tank farm impact and SWPF)
Release of benzene and other regulated volatiles

Risks

System complexity (flammable offgas and byproduct controls)
Scale-up (foam generation; dead-legs; heat transfer)
Permit for release of volatile organics
Potential energetic byproducts
Process cycle time

Alternative # 1.2 - 3

Tank 48 SEE

Idea Pro-Forma

Additional Comments

Alternative #1.2 - 3

Tank 48 SEE

Idea Pro-Forma

Category	7.0 2H Evaporator	**Date**	1/24/2006
Alternative #	1.22 - 2	**Phone**	8-3354
Originator	Renee Spires	**Dept**	LWD-Salt

Title

Thermal - In 2H Evaporator

Description

The waste in Tank 48H will be slowly fed (about 0.25 gpm) directly into the 2H Evaporator via a dedicated new above grade transfer line concurrent with normal feed from Tank 43H. At this rate, it will take about 2 years to decompose the contents of Tank 48H. The organic will be thermally decomposed in the 2H Evaporator via increased temperature (130-135oC). Addition of a catalyst such as palladium may be needed to drive the reaction to completion or to achieve the needed throughput. Organic destruction will create benzene in the evaporator overheads. Benzene will be condensed along with the water vapor. The condensed overheads will be routed through a decanter to separate the benzene. A coalescer will be used if needed to get adequate separation. The overheads will be sent to the Effluent Treatment Facility (ETF) for further treatment and release to the environment. The ETF has a carbon column than can absorb benzene carryover in the overheads stream. The benzene stream from the decanter will be collected and stored in a nitrogen inerted vessel. The total amount of benzene expected from Tank 48H is about 5,000 gal. This stream will be periodically shipped to an offsite incinerator vendor. The concentrated salt solution (evaporator bottoms) will be dropped to Tank 38H. Rinse wall film into bottom of Tank 48H for feed to evaporator.

Advantages

* The radionuclides in the Tank 48H waste will be disposed of in a Federal Repository
* The organic source term will be destroyed
* Tank 48H can be returned to Tank Farm service by 1/2010
* The process uses existing process equipment - 2H Evaporator
* The benzene stream should be very low in Cs-137 as SRS evaporators typically have a DF for Cs of 10E4-10E6

Disadvantages

* New Safety Basis development required
* Required temperature to decompose TPB may be higher than can be achieved in an SRS evaporator
* TPB decomposition rate may take longer than the expected residence time in the evaporator
* Sampling requirements are as yet undefined, they could extend the processing time
* Benzene carryover in the overheads sent to the ETF may be higher than ETF can tolerate
* Formation of tar-like substances in the evaporator is largely unknown, cleaning may be more difficult than

Pass/Fail PASS

Comments

Tank 48 SEE

Idea Pro-Forma

Alternative #1.22-2 **Process Diagram (Optional)**

Tank 48 SEE

Idea Pro-Forma

Cost

Upfront Project Cost
* process development $4M
* mods to transfer to 2H Evaporator including procedures, training, and DSA mods assume $4M
* mods to 2H Evaporator overheads handling system to separate liquid benzene stream from overheads (coalescer, decanter, nitrogen inerting storage vessel, truck loading station, etc.) assume $25M

Operations
* labor assume a new dedicated staff for 3 years of startup and operations with 2 operators, 1 maintenance mechanic, 1 RadCon inspector, and 1 lab technician assume $5M ($80k/FTE x 5 FTE x 4 shifts x 3 yr = $4.8M)
* contract with offsite trucking firm to transport 5,000 gal of slightly radioactive benzene to commercial incinerator (e.g., TOSCA) assume $2M
* contract with commercial incinerator vendor to dispose of benzene assume $3M
* contract to chemically clean evaporator to remove tarry substances assume once per quarter for 2 years at $0.25M per cleaning, assume $2

Total cost $33M + $12M = $45M

Schedule

FY06
*develop conceptual design and estimate
FY07
*develop and approve safety strategy, * obtain regulatory and stakeholder support, * initiate and complete detailed design for overheads handling mods and transfer line, and * start procurement of engineered equipment
FY08
*complete construction and startup testing, * initiate processing
FY09
* continue processing
FY10
* complete processing bulk contents of Tank 48H, * rinse Tank 48H, and * process rinse water

Tank 48H recovered for Tank Farm use by 1/2010
TPB decomposed and dispositioned by 1/2010

Technical Maturity

Overall, the technical maturity of this alternative is low for the following reasons:

* Decomposition temperature unknown
* Corrosion controls in evaporator vessel at preferred temperature unknown
* Reaction kinetics unknown
* Completeness of reaction unknown
* Vapor space management of evaporator unknown
* Disposition of benzene unknown
* Tarry substance formation potential

Alternative # 1.22 - 2

Tank 48 SEE

Idea Pro-Forma

Robustness

This alternative process is not very robust. The SRS evaporators have a utility of about 50% thus the duration of the campaign could be much longer than expected. It is likely that resolution of the technical issues (see Technical Maturity) will impose additional hardware and administrative controls in order to operate the process safely.

System Impacts

Increased organic loading in stream to ETF will likely increase use of carbon beds. Liquid benzene will need to be disposed of as mixed waste via incineration at TOSCA incinerator at Oak Ridge. This process will add 40-50,000 gal of concentrated supernate to the 2H Evaporator system.

Risks

See Technical Maturity section for a listing of technical risks.

Alternative # 1.22 - 2

Tank 48 SEE

Idea Pro-Forma

Additional Comments

Must meet ETF feed spec for organic or alter ETF process
Must find a place to dispose of benzene
Must be able to safely ship benzene
New benzene emission point at 2H evaporator
Development of a new Safety Basis will be required

Alternative #1.22 - 2

Tank 48 SEE

Idea Pro-Forma

Category	Type IV Tank & New Facility	**Date**	1-3-2006
Alternative	#1.23 - 1	**Phone**	5-8866
Originator	Kofi Adu-Wusu	**Dept**	SRNL

Title

Direct Wet Air Oxidation in 96H

Description

Wet air oxidation (WAO) is an aqueous phase process in which soluble or suspended waste conponents are oxidized using molecular oxygen contained in air. The process operates at elevated temperatures and pressures typically ranging from 100 to 320°C and 7 to 210 atmospheres, respectively. The products of the reaction are CO_2, H_2O, and low molecular weight oxygenated organics.

The basic flow scheme for a typical WAO system is as follows. The waste solution or slurry is pumped through a high-pressure feed pump. An air stream containing sufficient oxygen to meet the oxygen requirements of the waste stream is injected into the pressurized waste stream, and the air/liquid mixture is preheated to the required reactor inlet temperature. The reactor provides sufficient retention time to allow the oxidation to approach the desired level of organic decomposition. Typical reaction time is about 30 - 120 minutes.

Heat exchangers are routinely employed to recover energy contained in the reactor effluent to preheat the feed/air entering the reactor. Auxiliary energy, usually steam, is necessary for startup and can provide trim heat if required. Since the oxidation reactions are exothermic, sufficient energy may be released in the reactor to allow the WAO system to operate without any additional heat input.

After cooling, the oxidized reactor effluent passes through a pressure control valve where the pressure is reduced. A separator downstream of the pressure control valve allows the depressurized and cooled vapor to separate from the liquid.

Typical industrial WAO applications have a feed flow rate of 1 to 220 gpm per train, with a chemical oxygen demand (COD) from 10,000 to 150,000 mg/l (higher CODs with dilution).

Note that catalysts, such as homogeneous copper and iron, their heterogeneous counterparts, or precious metal catalysts can be used to enhance the effectiveness (i.e., to lower temperature, pressure, and residence time as well as increase oxidation efficiencies) of the WAO reaction.

Advantages

* Continuous process with short reaction times (30 to 120 minutes)
* No new chemicals and no increase in waste volume
* Intermediate products like benzene will be in the liquid state and eventually get destroyed
* Tk 48 Ci added to HLW and disposed of as glass
* low cost @ ~ $22M

Disadvantages

* some R&D required to tailor process to our application
* new Safety Basis development required
* new shielded facility (or retrofit of existing facility) required
* very high temperatures and pressures

Pass/Fail PASS

Comments

Tank 48 SEE

Idea Pro-Forma

Alternative #1.23-1 **Process Diagram (Optional)**

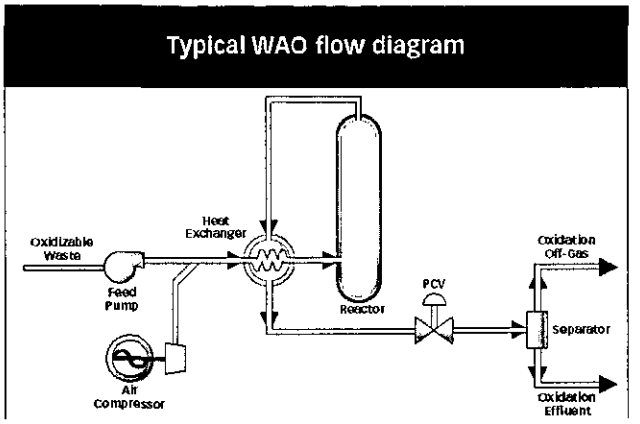

Ethylene Plant Spent Caustic WAO System; Insert: Feed and Treated Samples.

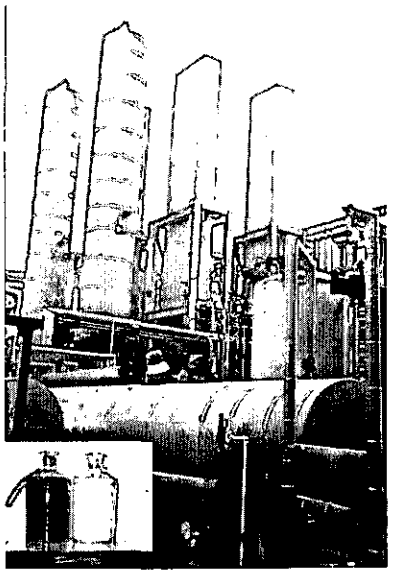

Tank 48 SEE

Idea Pro-Forma

Cost

Upfront Project Cost
* $4M for R&D and flowsheet development
* $2M for DSA and controls development
* $10M to procure process equipment that can be operated in a remote shielded environment
* $15M to renovate 96H hold tank area to house new equipment

Operations Cost
* $1M for steam ($1M/yr for 1 years)
* $1.3M for labor ($80 k/FTE/yr x 8 fte x 2 yrs = 5.1M)

Total Cost = $31M + $6M = $37M

Schedule

FY06 *basic R&D and flowsheet development
FY07 *develop conceptual design and estimate, *develop and approve safety strategy, *obtain regulatory and stakeholder support, * start detailed design
FY08 *start procurement of engineered equipment, *initiate construction, *complete design
FY09 *complete construction, *initiate processing
FY10 *complete processing

Tank 48 return to service by FY10

Technical Maturity

WAO is a proven technology. WAO technology has been successfully commercialized for 50 plus years. Over 200 full scale systems have been constructed and operated worldwide.

WAO is used to destroy organics in spent caustic (high pH similar to SRS waste) wastewater streams generated by ethylene plants and oil refineries (petrochemical industry). It is also used to treat organic wastes in pharmaceutical and chemical industries as well as municipal/sewage sludges. Examples of organics destroyed include phenols, benzene, naphthenics, cresylics, etc.

It is my understanding that a DuPont facility is using WAO process to destroy "TPB" in waste.

In the radioactive arena, bench-scale WAO was successfully applied in the 1990s to destroy organics (EDTA, formate, citrate, acetate, and oxalate) in Hanford Site actual waste. Organics destruction based on TOC was > 98%.

No known large-scale radioactive waste operation is in existence.

Alternative # 1.23 - 1

Tank 48 SEE

Idea Pro-Forma

Robustness

Expected to easily meet the performance requirements

System Impacts

* the construction in the ARP hold tank area will have to be integrated with the planned ARP operation
* WAO operation must occur after the ARP campaign is over; they cannot go in parallel

Risks

* cost of project may be more than expected
* process may not fit in the ARP hold tank area and it is the biggest suitable area we have other than the Canyons

Alternative # 1.23 - 1

Tank 48 SEE

Idea Pro-Forma

Additional Comments

The potential safety issues associated with the use of hydrogen peroxide (Fenton approach) are much worse than ju
a high-pressure system characteristic of WAO.

The analog to WAO is Wet Oxidation (WO). WO is essentially the same as WAO except no air is added. In general
WO requires higher temperatures, pressures, and residence times and also leads to lower oxidation efficiencies.
However, it may work well on the Tank 48 waste. Bench scale WO worked fairly well on Hanford Site actual wast

Alternative #1.23 - 1

Tank 48 SEE

Idea Pro-Forma

Category	Type IV Tank & New Facility	**Date**	2-7-2006
Alternative #	1.23 - 2	**Phone**	5-8866
Originator	Adu-Wusu/McCabe	**Dept**	SRNL

Title

Park in Tank 24 and Wet Air Oxidation in New Facility

Description

Transfer and store tank contents in a Type IV tank until a facility is modified or a new facility is constructed. Wet air oxidation (WAO) is an aqueous phase process in which soluble or suspended waste components are oxidized using molecular oxygen contained in air. The process operates at elevated temperatures and pressures typically ranging from 100 to 320°C and 7 to 210 atmospheres, respectively. The products of the reaction are CO2, H2O, and low molecular weight oxygenated organics.

The basic flow scheme for a typical WAO system is as follows. The waste solution or slurry is pumped through a high-pressure feed pump. An air stream containing sufficient oxygen to meet the oxygen requirements of the waste stream is injected into the pressurized waste stream, and the air/liquid mixture is preheated to the required reactor inlet temperature. The reactor provides sufficient retention time to allow the oxidation to approach the desired level of organic decomposition. Typical reaction time is about 30 - 120 minutes.

Heat exchangers are routinely employed to recover energy contained in the reactor effluent to preheat the feed/air entering the reactor. Auxiliary energy, usually steam, is necessary for startup and can provide trim heat if required. Since the oxidation reactions are exothermic, sufficient energy may be released in the reactor to allow the WAO system to operate without any additional heat input.

After cooling, the oxidized reactor effluent passes through a pressure control valve where the pressure is reduced. A separator downstream of the pressure control valve allows the depressurized and cooled vapor to separate from the liquid.

Typical industrial WAO applications have a feed flow rate of 1 to 220 gpm per train, with a chemical oxygen demand (COD) from 10,000 to 150,000 mg/l (higher CODs with dilution).

Note that catalysts, such as homogeneous copper and iron, their heterogeneous counterparts, or precious metal catalysts can be used to enhance the effectiveness (i.e., to lower temperature, pressure, and residence time as well as increase oxidation efficiencies) of the WAO reaction.

Advantages

Continuous process
Relatively short reaction times - 30 to 120 minutes typical
No use of chemicals and No increase in waste volume
High thermal efficiency - essentially an autothermal operation
Intermediate products like benzene will be in the liquid state and eventually get destroyed.
High pH medium will not favor benzene hydrolysis
Corrosion resistant materials if needed are already available for the process

Disadvantages

* some R&D required to tailor process to our application
* new Safety Basis development required
* new shielded facility (or retrofit of existing facility) required
* very high temperatures and pressures

Pass/Fail PASS

Comments Develop as a remove, store at alternate location and process at alternate treatment location

Tank 48 SEE

Idea Pro-Forma

Alternative #1.23-2 **Process Diagram (Optional)**

Type IV; Process via WAO

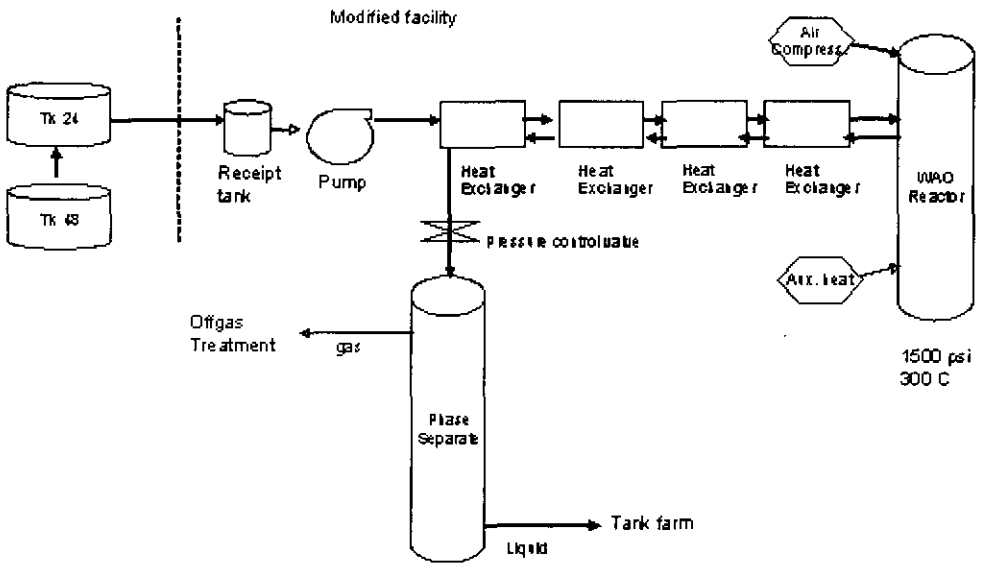

Tank 48 SEE

Idea Pro-Forma

Cost

Upfront Project Cost
* transfer to Tank 24 assume $2M for procedures, training, DSA mods and comp measures
* storage in Tank 24 assume $12M for liquid and vapor space mixing and monitoring
* $4M for R&D and flowsheet development
* $2M for DSA and controls development
* $10M to procure process equipment that can be operated in a remote shielded environment
* $15M to renovate facility with new equipment

Operations Cost
* $1.25M for steam ($1M/yr for 1.25 years)
* $10M for labor ($80 k/FTE/yr x 8 fte x 4/yr = 10M)

Total Cost = $45M + $10M = $55M

Schedule

FY06
basic R&D and flowsheet development; develop conceptual design and estimate
FY07
*continue R&D, *develop conceptual design and estimate, *develop and approve safety strategy, * obtain regulatory and stakeholder support, * detailed design for Tank 24, and * start procurement of engineered equipment
FY08
*complete design, * initiate construction
FY09
* complete construction, *transfer waste to Tank 24
FY10
*Return waste from Tank 24, *Process waste

Tank 48 return to service FY09

Technical Maturity

WAO is a proven technology. WAO technology has been successfully commercialized for 50 plus years. Over 200 full scale systems have been constructed and operated worldwide.

WAO is used to destroy organics in spent caustic (high pH similar to SRS waste) wastewater streams generated by ethylene plants and oil refineries (petrochemical industry). It is also used to treat organic wastes in pharmaceutical and chemical industries as well as municipal/sewage sludges. Examples of organics destroyed include phenols, benzene, naphthenics, cresylics, etc.

It is my understanding that a DuPont facility is using WAO process to destroy "TPB" in waste.

In the radioactive arena, bench-scale WAO was successfully applied in the 1990s to destroy organics (EDTA, formate, citrate, acetate, and oxalate) in Hanford Site actual waste. Organics destruction based on TOC was > 98 %.

No known large-scale radioactive waste operation is in existence.

Alternative # 1.23 - 2

Tank 48 SEE

Idea Pro-Forma

Robustness

Expected to easily meet the performance requirements

System Impacts

* the construction in the ARP hold tank area will have to be integrated with the planned ARP operation
* WAO operation must occur after the ARP campaign is over; they cannot go in parallel

Risks

* cost of project may be more than expected
* process may not fit in the ARP hold tank area and it is the biggest suitable area we have other than the Canyons

Alternative # 1.23 - 2

Tank 48 SEE

Idea Pro-Forma

Additional Comments

The potential safety issues associated with the use of hydrogen peroxide (Fenton approach) are much worse than ji a high-pressure system characteristic of WAO.

The analog to WAO is Wet Oxidation (WO). WO is essentially the same as WAO except no air is added. In general WO requires higher temperatures, pressures, and residence times and also leads to lower oxidation efficiencies. However, it may work well on the Tank 48 waste. Bench scale WO worked fairly well on Hanford Site actual wast

Alternative # 1.23 - 2

Tank 48 SEE

Idea Pro-Forma

Category	6.0 Canyon	**Date**	1/21/2006
Alternative #	1.24 - 1	**Phone**	8-3354
Originator	Renee H. Spires	**Dept**	

Title

Direct Sodium Permanganate/Acid in 221-H

Description

Decompose the TPB in a heated vessel in modified Canyon facility. Resulting release of benzene is removed through the existing purge ventilation system. Remaining salt solution returned to Tank Farm. Spray wash Tank 48 interior to rinse wall film into tank bottom.

Process Flow

Provide dedicated transfer path or above grade temporary transfer line from Tank 48 to the Canyon facility. Transfer the solution to a bicell. Use the bicell to transfer material to the dissolver. This will be a batch process of around 1150 gal of T48 material. Permanganate and Acid are added to the dissolver. Decompose the waste by heating the tank contents to 95-135 °C as needed to decompose all TPB. Benzene will be exhausted in the tank vapor purge offgas stream and vented to the atmosphere via the existing off-gas system.

Transfer the material through the centrifuge to separate out the MnO2 and Sodium Oxalate. Issue will be the benzene concentration in the liquor. The liquor will be evaporated. Transfer the concentrated solids to the neutralization tank. Treated waste can be sampled and transferred to Tanks Farm for eventual evaporation in the 3H Evaporator. Rinse wall film into bottom of Tank 48 during transfer to Canyon facility.

If the resulting solution is not evaporated, then the material can be transferred directly to the neutralization tank.

Advantages

1. No waste to Saltstone
2. Reuse of existing facility

Disadvantages

1. New Safety Basis development required
2. Dissolver must be inerted
4. Canyon does not normally use phosphoric acid
5. Permitting of Canyon facility to process waste and exhaust benzene

Pass/Fail PASS

Comments

Tank 48 SEE

Idea Pro-Forma

Alternative #1.24-1 **Process Diagram (Optional)**

Process Flowsheet- Permanganate/Acid in Canyon With Evaporation

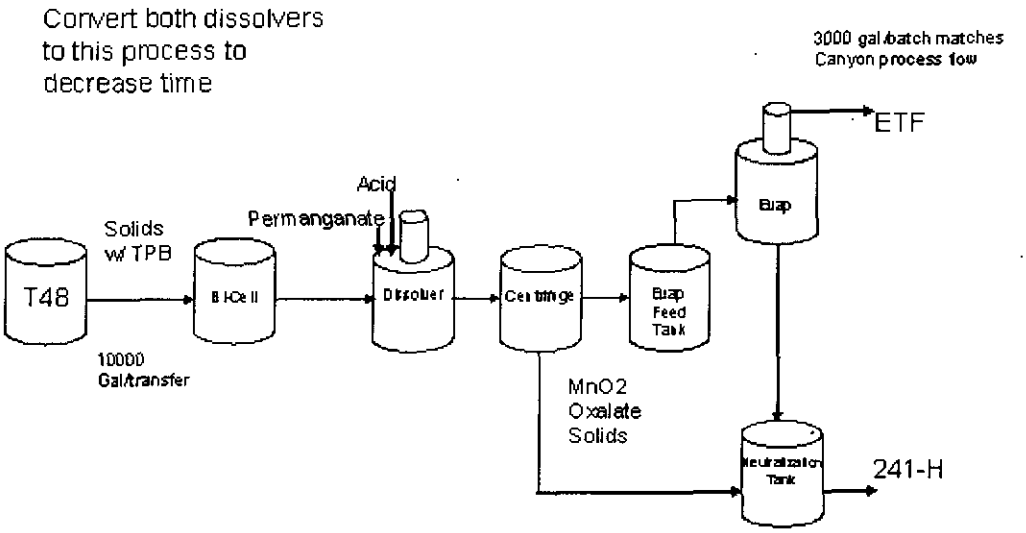

Tank 48 SEE

Idea Pro-Forma

Cost

Upfront Project Cost
* SRNL costs to set up flowsheet assume $1M
* Transfer to Canyon procedures, training, DSA mods and comp measures assume $2M
* Canyon DSA mods to decompose TPB assume $12M
* Cold chemical piping assume $2M
* Canyon jumpers assume $10M

Operations
* labor assume facilities can absorb these transfer activities
* cold chems assume $5/gal for 500K gal or $2.5M
* nitrogen in Canyon assume $1M
* 6mths of HLW system @ $M300/yr - $150M
* Canyon ops(2yrs) - $200M

Schedule

One year to design and set up safety basis.
One year to fabricate and install transfer line, cold chemical services, and Canyon jumpers.

Tank 48 return to service by FY09

TPB Dispositioned FY08/09

Technical Maturity

High -
R&D required to set up a flowsheet. Optimization of flowsheet required to improve cold chemical to TPB ratio.

Alternative #1.24-1

Tank 48 SEE

Idea Pro-Forma

Robustness

Process will work.
MOC control would be required in Canyon dissolvers, nitrogen would need to be added to system.
Phosphoric acid is not normally used in the canyon.
Would also have to run the dissolver condenser to not condense benzene.

System Impacts

Assume 500K gallons transferred to Canyon, 10K at a time. 50 transfers.

For 1 dissolver @ 4 batches per week, 2 years of Canyon operation

For 2 dissolvers @4 batches per week 1.5 years of Canyon operation.

Risks

Permitting for Canyon is an issue.

Alternative #1.24 - 1

Tank 48 SEE

Idea Pro-Forma

Additional Comments

Alternative #1.24 - 1

Tank 48 SEE

Idea Pro-Forma

Category	9.0 Type IV Tank & Modified Facility	**Date**	1/24/2006
Alternative #	1.24 - 2	**Phone**	5-8238
Originator	Dan McCabe	**Dept**	

Title

Park in Tank 24 and Sodium Permanganate/Acid in H-Area Facility

Description

Transfer Tank 48 contents to Type IV tank for storage; including Tank 48 rinse water. Modify H-area facility for optimum Permanganate conditions. Resulting release of offgas is treated through the modified ventilation system (may need NOx abatement). Treated salt solution and manganese oxide sludge returned to Tank Farm.

Process Flow

Transfer from Type IV tank to modified facility in ~2000 gallon batches. Add 1200 gallons 0.6 M NaMnO4/2.5 M H3PO4. TPB decomposes, generating carbon dioxide. Assume 8 hour reaction time to control foaming. Excess permanganate is destroyed using 4000 gallons 8 wt% oxalic acid. Vapors will be exhausted in the offgas stream and vented to the atmosphere via the modified off-gas system. Treated waste can be sampled, caustic adjusted (assume 1000 gallons 15 M NaOH) and transferred to Tank Farm. Mix MST, manganese oxide (234 kg), sodium oxalate (1500 kg) and sodium phosphate (15,000 kg) with sludge for DWPF. Liquid volume increase is 3.4X in lab; assume we can achieve 3X with optimization.

Advantages

1. No untreated waste to Saltstone
2. No new facility (modify existing)

Disadvantages

1. Wall film in Tank 48 may not rinse off
2. Permanganate handling and cost
3. R&D cost for scale up
4. Volume increase
5. DWPF impact from manganese oxide (and potentially sodium oxalate, sodium phosphate)

Pass/Fail PASS

Comments

Tank 48 SEE

Idea Pro-Forma

Alternative #1.24-2 **Process Diagram (Optional)**

Type IV; Permanganate Process Diagram

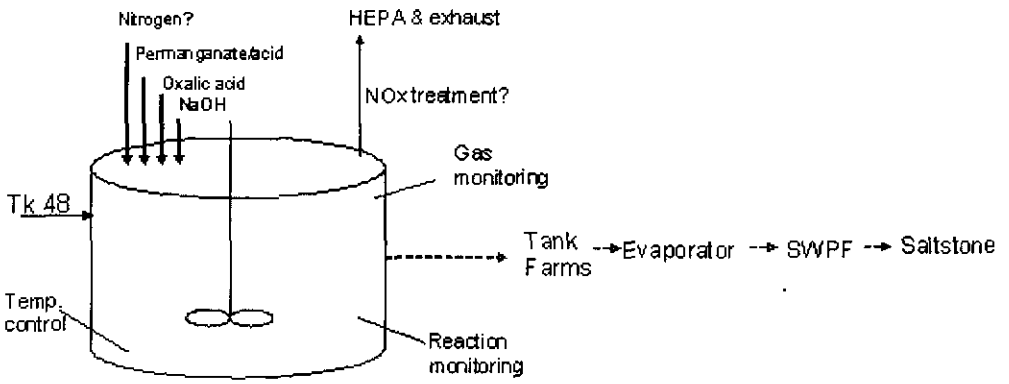

Tank 48 SEE

Idea Pro-Forma

Cost

Upfront Project Cost
* transfer to Tank 24 assume $2M for procedures, training, DSA mods and comp measures
* storage in Tank 24 assume $12M for liquid and vapor space mixing and monitoring
* Design activities assume $10M
* modified plant with cold chemical support facilities assume $20M (inconel tanks)
* R&D $3M (incl. glass)

Operations
* labor assume a new dedicated staff for 3 years of start-up, operations (24/7) 4, maintenance of 2, RadCon of 2, Lab of 2, R&HE of 4 for total labor of $10M ($80k/FTE x 14 FTE x 3 shifts x 3 yr = $10M)
* cold chems assume $30/gal for 0.5 Mgal or $10M (permanganate, nitrogen, acids, caustic, HEPAs)
* DWPF canister cost for product $150M (0.5 can/2000 gal batch; 500 lb MnO2; $1M/canister)
*Increased Saltstone costs $6M (assume 3X volume increase; 2 Mgal)

Total cost $47M + $176M = $223M

Schedule

FY06
R&D - narrow operating window
Conceptual design parameters
FY07
R&D - optimize operating conditions; initiate excursion tests
Preliminary design parameters; integration plan evaluation; select disposal path
FY08
R&D - Perform engineering tests; continue excursion tests.
final process condition selection; final design; preliminary CHAP; preliminary cost estimate; initiate construction
FY09
complete construction;
FY10 - 13
Cold run-in and hot operations

Tank 48 return to service by FY09

Technical Maturity

Transfer - this will be tricky in DSA space but is considered "doable" by the transfer engg COG
Storage - very mature based on 15 yrs of actuals in Tk 48 and new design for Tk 50 that will be applied to Tk 24

Process - Moderate - Fundamental effectiveness demonstrated with actual waste at small scale. Safety and operab: issues during scale up (foaming and O2 generation). Safety and operability R&D required.

Extensive onsite experience with permanganate handling. Process control and analysis requirements not defined. Offgas requirements somewhat complex.

Alternative # 1.24 - 2

Tank 48 SEE

Idea Pro-Forma

Robustness

Moderate - Radioactive testing performed and implemented; scale up issues with foam and heat transfer; permanga dangers; potential offgas pluggage problems.

System Impacts

DWPF canisters
Saltstone volume increase

Risks

Scale-up (foam generation; heat transfer)
Permit

Alternative #1.24 - 2

Tank 48 SEE

Idea Pro-Forma

Additional Comments

Alternative #1.24-2

Tank 48 SEE

Idea Pro-Forma

Category	Saltstone	**Date**	1/24/2006
Alternative	#1.26 - 1	**Phone**	8-2980
Originator	Neil Davis	**Dept**	LWD-Salt

Title

Park at Saltstone and Aggregate

Description

General - Transfer Tk 48 to one of the tanks in Vault 2 and store. Feed waste to existing Saltstone grout mixer and emplace in adjacent Vault 2 tanks.
Transfer to Vault 2 - Use existing lines from Tk 48 to Tk 48 valve box to HDB-7 to Tk 50 valve box to Saltstone vicinity. Tie in new transfer line segment to a Vault 2 tank using a new valve box. This will require DSA, procedure, training and admin controls to prevent inadvertent transfers and leaks.
Storage - The Vault 2 tank will require liquid and vapor space mixing and monitoring. The vault will serve as secondary containment. This may require a steel liner or a coating on the concrete.
Feed to Mixer - Once the Tk 48 waste is in the Vault 2 tank, then the waste can be fed to the mixer backwards thru the new transfer line segment to the new valve box and then to the mixer.
Grouting - Mixed grout will be pumped back to Vault 2 via existing transfer lines provided by the Vault 2 project. Assume 3 Mgal of grout needed.

Advantages

* Uses the existing Saltstone grout plant with no changes
* Uses the existing Vault 2 tanks and concrete sheilding
* Recovers Tank 48 by FY09
* dispositions grout by FY10

Disadvantages

* new transfer line segment and valve box needed near Vault2
* all Ci end up in State of SC
* ties up grout plant processing Tk 48 waste at same time as MCU
* consumes Vault 2 tank volume

Pass/Fail PASS

Comments

Tank 48 SEE

Idea Pro-Forma

Alternative #1.26-1 **Process Diagram (Optional)**

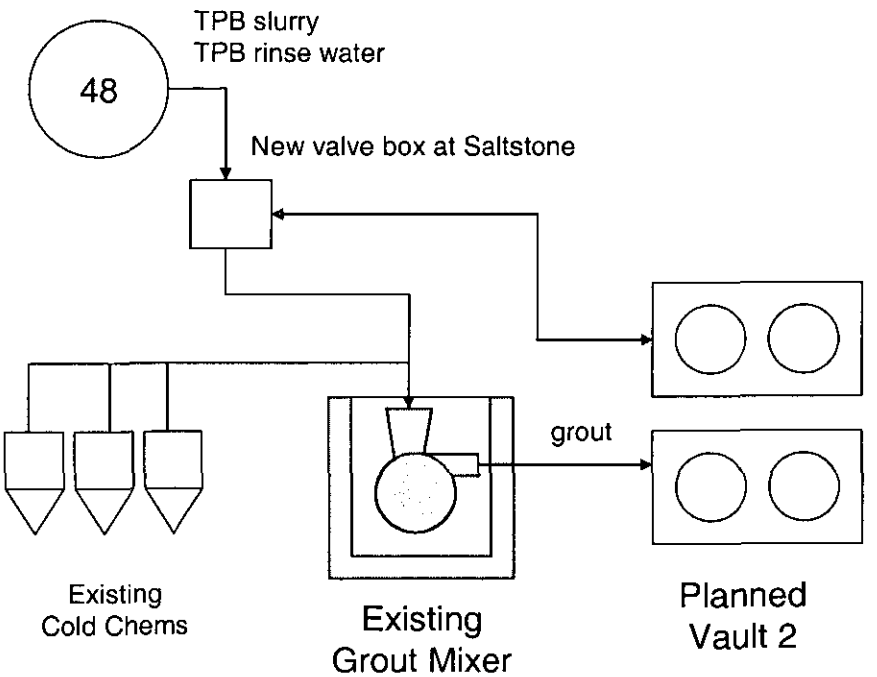

Tank 48 SEE

Idea Pro-Forma

Cost

Upfront Project Cost
* transfer to Vault 2 assume $2M for procedures, training, DSA mods and comp measures
* Shielding modifications $20M
* new valve box and new transfer line segment assume $2M
* storage in Vault 2 tank assume $10M for liquid and vapor space mixing and monitoring (clean work)
* nitrogen $5M

Operations
* labor assume a new dedicated staff for 1 year of 2 operators, 1 maintenance, 1 RadCon, for total labor of $0.3M ($80k/FTE x 4 FTE x 1 yr = $0.3M)
* cold chems assume $5/gal for 3 Mgal or $16M

Total cost $39M + $16M = $26M

Schedule

FY06
*develop conceptual design and estimate
FY07
*develop and approve safety strategy, * obtain regulatory and stakeholder support, * initiate detailed design for Vau 2 and transfer mods, and * start procurement of engineered equipment
FY08
*complete design, * initiate construction
FY09
* complete construction, *transfer waste to Vault 2
FY10
* process at 100 kgal/wk, 30 wks for 3Mgal total

Technical Maturity

Transfer to Vault 2 - will be tricky in DSA space but should not involve significant hardware mods or R&D. It would be nice to get this done in 2-3 big transfers.
Storage - we have years of experience storing in Tank 48
Feed to Mixer - same as transfer to Vault 2
Grouting - all tech issues associated with this are currently being worked as part of the Aggregation baseline

Overall, this is technically mature.

Alternative # 1.26 - 1

Tank 48 SEE

Idea Pro-Forma

Robustness

Very robust. This alternative will disposition the TPB.

System Impacts

* High rad rates from Vault 2 during storage phase may impact other nearby activities.

Risks

* DNFSB and SCDHEC may not support storage of Tank 48 waste in Vault 2
* Vault 2 tank may require significant mods to hold liquid HLW instead of LLW grout
* TPB grout will pass the TCLP test but may not meet the intent of the test as benzene may leach out of the grout after the 30 day test is conducted

Alternative # 1.26 - 1

Tank 48 SEE

Idea Pro-Forma

Additional Comments

None

Alternative # 1.26 - 1

Tank 48 SEE

Idea Pro-Forma

Category	9.0 Type IV Tank & Modified Facility	**Date**	1/24/2006
Alternative	#1.27 - 1	**Phone**	5-8238
Originator	Dan McCabe	**Dept**	

Title

Park in Tank 24 and Solvent Extract TPB in MCU

Description

Transfer Tank 48 contents to Type IV tank for storage; including Tank 48 rinse water. Modify MCU (or other H-area facility) for pseudo-solvent extraction process. Resulting organic phase dispositioned via absorption or offsite incineration. Treated salt solution returned to Tank Farm.

Process Flow

Transfer material from Type IV tank to modified facility in ~2000 gallon batches. Add 2000 gallons of organic solvent. Assume 1 hour mixing. Separate phases. Aqueous phase is settled to remove MST; then sent to Tank 50/Saltstone. Organic phase is processed through "pseudo-solvent extraction" to isotopically dilute Cs-137. Decontaminated organic phase is sent for sorption and burial or offsite for incineration/steam reforming. Aqueous phase containing Cs-137 and high non-rad Cs is mixed with MST and sent to DWPF feed tank.

Advantages

1. No untreated waste to Saltstone (Cs-137 content equivalent to current filtrate; 0.05 Ci/gal or less)
2. No new facility (modify existing), small, carbon steel vessels
3. Extensive onsite experience with solvent extraction
4. MST and Cs-137 sent to DWPF
5. Minimal organic vapor releases/Reduced overall hazards
6. Easily adapted for tank rinse water by reducing organic:aqueous ratio
7. Minimal volume increase

Disadvantages

1. Acceptable solvent not known (hazardous or too water soluble)
2. Wall film in Tank 48 may not rinse off
3. Moderate R&D cost
4. WD needed for organic phase

Pass/Fail PASS

Comments

Tank 48 SEE

Idea Pro-Forma

Alternative #1.27-1 **Process Diagram (Optional)**

Exchange/Extract

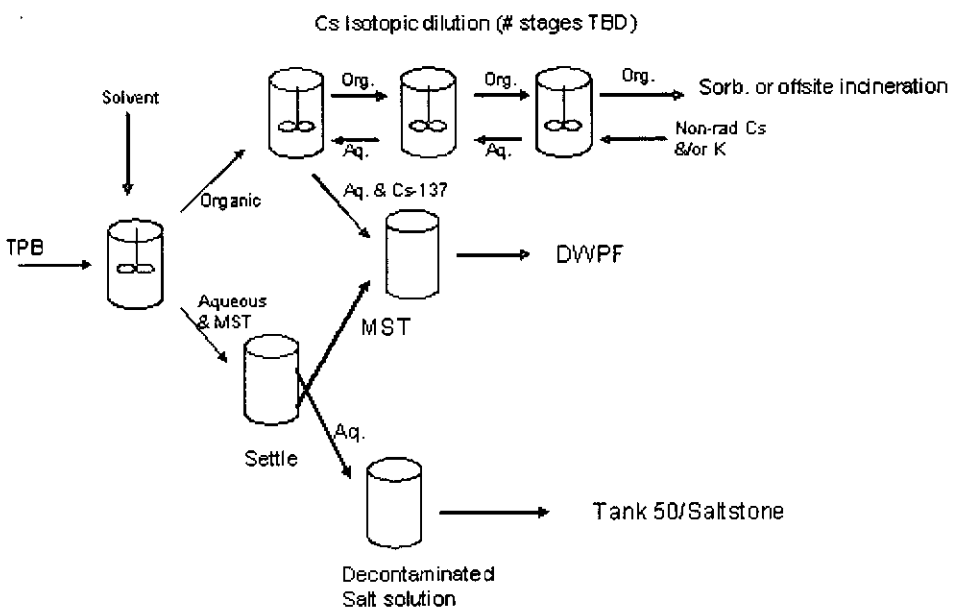

Tank 48 SEE

Idea Pro-Forma

Cost

Upfront Project Cost
* transfer to Tank 24 assume $2M for procedures, training, DSA mods and comp measures
* storage in Tank 24 assume $12M for liquid and vapor space mixing and monitoring
* Design activities assume $5M (carbon steel, Nitrogen inerting, DSA, regulatory, etc.)
* modified plant with cold chemical support facilities assume $15M
* R&D $2M

Operations
* labor assume a new dedicated staff for 2 years of start-up, operations (4/10s) 4, maintenance of 2, RadCon of 2, Lab of 1, R&HE of 4 for total labor of $2M ($80k/FTE x 13FTE x 1 shifts x 2 yr = $2M)
* cold chems assume $15/gal for 0.5 Mgal = $7.5M
* offsite contract $30M ??? (incineration)
*Saltstone costs $2M (no volume increase; 0.5 Mgal)

Total cost $36M + $42M = $98M

Schedule

FY06
R&D - identify solvent system
Conceptual design parameters
FY07
R&D - optimize operating conditions; rad tests
Design parameters; integration plan evaluation; CHAP; initiate construction
FY08
R&D - Perform engineering tests
complete construction
FY12 - FY13
Cold run-in and hot operations

Technical Maturity

Transfer - this will be tricky in DSA space but is considered "doable" by the transfer engg COG
Storage - very mature based on 15 yrs of actuals in Tk 48 and new design for Tk 50 that will be applied to Tk 24

Process - Low - acceptable solvent not identified; utilized with actual samples in analytical method at SRNL (with acetonitrile); basic extraction demonstrated in Literature with radioactive tracers (in nitrobenzene, acetonitrile); many solvents tested with other TPB-containing species.

Method - High - extensive onsite experience with solvent extraction process

Alternative # 1.27 - 1

Tank 48 SEE

Idea Pro-Forma

Robustness

High - assuming solvent can be identified

System Impacts

Potential for solvent carryover to DWPF &/or Saltstone would be addressed in R&D program
More sludge washing rquired

Risks

Acceptable solvent may not be identified
Permit & WD
Offsite transport
fate of mercury and Tc unknown; if partitioned to solvent, incineration/disposal may be complicated;
HazCat may be raised

Alternative #1.27 - 1

Tank 48 SEE

Idea Pro-Forma

Additional Comments

Alternative #1.27 - 1

Tank 48 SEE

Idea Pro-Forma

Category	Canyon	**Date**	1/24/2006
Alternative	#1.27 - 2	**Phone**	5-8238
Originator	Renee Spires	**Dept**	

Title

Extract/exchange in 221-H

Description

Transfer Tank 48 contents to Canyon; including Tank 48 rinse water. Modify mixer-settlers for pseudo-solvent extraction process. Resulting organic phase dispositioned via absorption or offsite incineration. Treated salt solution returned to Tank Farm.

Process Flow

Provide dedicated transfer path or above grade temporary transfer line from Tank 48 to the Canyon facility. Transfer the solution to a bicell. Transfer about 1500 gallons of material from bicell to a tank that contains about 2000 gallons of organic solvent. Assume 1 hour mixing. Separate phases. Aqueous phase is settled to remove MST; then sent to Tank 50/Saltstone. Organic phase is processed through "mixer-settlers to isotopically dilute Cs-137. Decontaminated organic phase is sent for sorption and burial or offsite for incineration/steam reforming. Aqueous phase containing Cs-137 and high non-rad Cs is mixed with MST and segregated to send to sludge tank.

Advantages

1. No untreated waste to Saltstone (Cs-137 content equivalent to current filtrate; 0.05 Ci/gal or less)
2. No new facility (modify existing), small, carbon steel vessels
3. Extensive onsite experience with solvent extraction
4. MST and Cs-137 sent to DWPF
5. Minimal organic vapor releases/Reduced overall hazards
6. Easily adapted for tank rinse water by reducing organic:aqueous ratio
7. Minimal volume increase

Disadvantages

1. Acceptable solvent not known (hazardous or too water soluble)
2. Wall film in Tank 48 may not rinse off
3. Moderate R&D cost
4. WD needed for organic phase
5. Would require additional criticality work

Pass/Fail

Comments

Tank 48 SEE

Idea Pro-Forma

Alternative #1.27-2 **Process Diagram (Optional)**

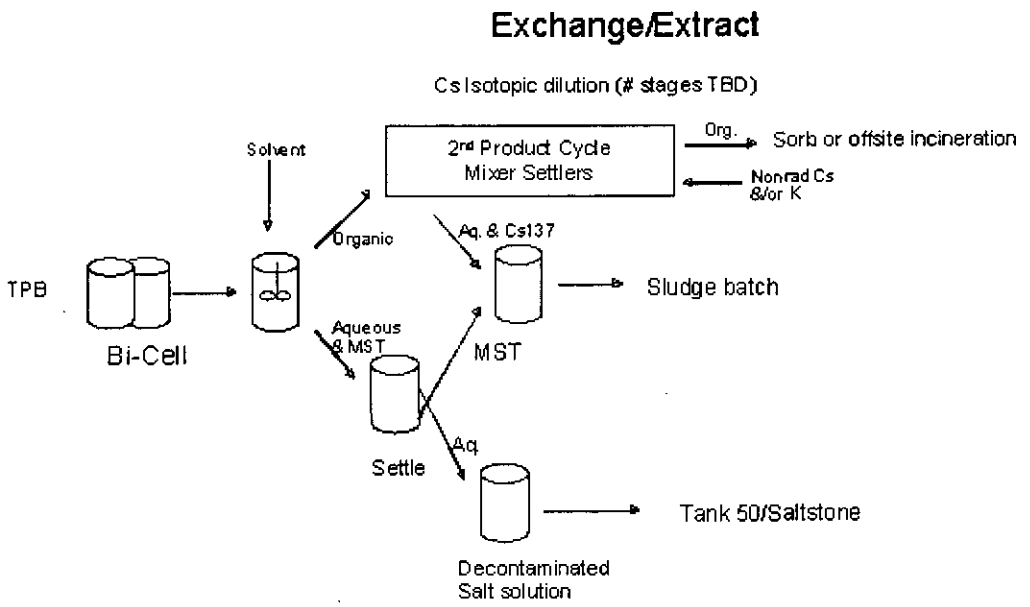

Tank 48 SEE

Idea Pro-Forma

Cost

Upfront Project Cost
* Upfront Project Cost
* SRNL costs to set up flowsheet assume $2M
* Transfer to Canyon procedures, training, DSA mods and comp measures assume $2M
* Canyon DSA mods to decompose TPB assume $12M
* Cold chemical piping assume $2M
* Canyon jumpers assume $10M

Operations
* labor assume facilities can absorb these transfer activities
* cold chems assume $15/gal for 500K gal or $7.5M
* offsite contract $30M (incineration)
*Saltstone costs $2.5M (no volume increase; 0.5 Mgal)

Total cost $28M + $40M = $68M
Note: Canyon may remain operable for other missions while this process is being run

Schedule

FY06
R&D - identify solvent system, initiate rad tests
Identify conceptual process parameters
FY07
R&D - optimize operating conditions; complete rad tests, perform engineering tests
Finalize process parameters; integration plan evaluation; CHAP; initiate facility modifications
FY08
complete modifications
FY09
Rad operations; return Tank 48 to service

Technical Maturity

Process - Low - acceptable solvent not identified; utilized with actual samples in analytical method at SRNL (with acetonitrile); basic extraction demonstrated in Literature with radioactive tracers (in nitrobenzene, acetonitrile); man solvents tested with other TPB-containing species.

Method - High - extensive onsite experience with solvent extraction process

Alternative # 1.27 - 2

Tank 48 SEE

Idea Pro-Forma

Robustness

High - assuming solvent can be identified

System Impacts

None (Potential for solvent carryover to DWPF &/or Saltstone would be addressed in R&D program)
Extends life cycle for Canyon
Canyon may remain operable for other missions while this process is being run

Risks

Acceptable solvent may not be identified
Permit & WD
Offsite transport
fate of mercury and Tc unknown; if partitioned to solvent, incineration/disposal may be complicated;
Window in Canyon processing
Permit problems may be encountered

Alternative #1.27-2

Tank 48 SEE

Idea Pro-Forma

Additional Comments

Alternative #1.27-2

Tank 48 SEE

Idea Pro-Forma

Category	9.0 Type IV Tank & Modified Facility	**Date**	1/24/2006
Alternative #	1.28 - 1	**Phone**	5-8238
Originator	Dan McCabe	**Dept**	

Title

Park in Tank 24 and ZnO Catalyzed Ozone Oxidation in H-area Facility

Description

Transfer Tank 48 contents to Type IV tank for storage; including Tank 48 rinse water. Modify H-area facility for optimum ozone conditions. Resulting release of offgas is treated through the modified ventilation system. Treated salt solution returned to Tank Farm.

Process Flow

Transfer from Type IV tank to modified facility in ~2000 gallon batches. Add ZnO. Bubble in ozone. TPB decomposes, generating carbon dioxide. Assume 100 hour reaction time to control foaming. Excess ozone is destroyed using carbon trap. Gas will be exhausted in the offgas stream and vented to the atmosphere via the modified off-gas system. Treated waste can be sampled, and transferred to Tank Farm. Mix MST with sludge for DWPF.

Advantages

1. No untreated waste to Saltstone
2. No new facility (modify existing)

Disadvantages

1. *Wall film in Tank 48 may not rinse off*
2. Ozone generation, safe handling, and cost
3. Large R&D cost
4. Process unproven
5. ozone generator and electricity costs

Pass/Fail PASS

Comments

Tank 48 SEE

Idea Pro-Forma

Alternative #1.28-1 **Process Diagram (Optional)**

Type IV; Ozone Process Diagram

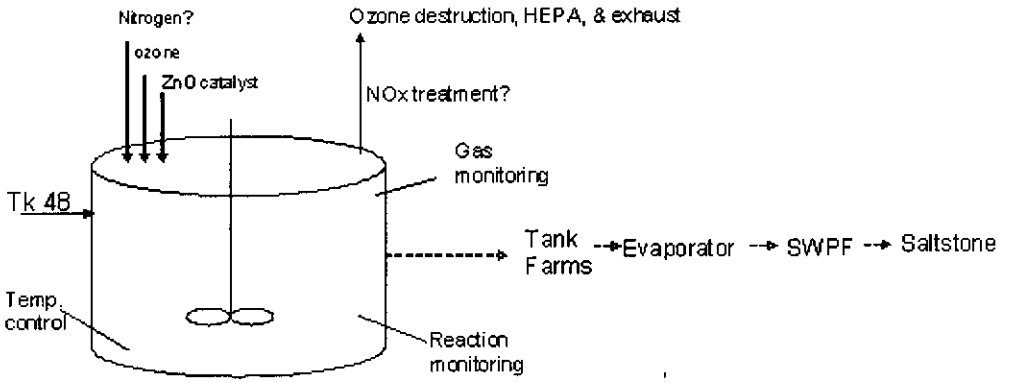

Tank 48 SEE

Idea Pro-Forma

Cost

Up Front Project Cost
* transfer to Tank 24 assume $2M for procedures, training, DSA mods and comp measures
* storage in Tank 24 assume $12M for liquid and vapor space mixing and monitoring
* Design activities assume $10M
* modified plant with cold chemical support facilities assume $20M (inconel tanks)
* ozone generator $5M
* R&D $5M

Operations
* labor assume a new dedicated staff for 3 years of start-up, operations (24/7) 4, maintenance of 2, RadCon of 2, Lab of 2, R&H E of 4 for total labor of $10M ($80k/FTE x 14 FTE x 3 shifts x 3 yr = $13M)
* cold chems assume $5/gal for 0.5 Mgal or $2.5M (nitrogen, caustic, HEPAs)
* electricity $10M ???
*Saltstone costs $1M (no volume increase; 0.25 Mgal)

Total cost $54M + $27M = $81M

Schedule

FY06
R&D - narrow operating window
Conceptual design parameters
FY07
R&D - optimize operating conditions; excursion tests
Preliminary design parameters; integration plan evaluation; select disposal path
FY08
R&D - Perform engineering tests
final process condition selection; final design; preliminary CHAP; preliminary cost estimate; initiate construction
FY09
complete construction;
FY10 - 13
Cold run-in and hot operations

Tank 48 return to service by FY09

Technical Maturity

Transfer - this will be tricky in DSA space but is considered "doable" by the transfer engg COG
Storage - very mature based on 15 yrs of actuals in Tk 48 and new design for Tk 50 that will be applied to Tk 24

Process - Low - Scoping test ~15 years ago generated black liquid from simulant. Safety and operability issues dur scale up (foaming and O2 generation). Safety and operability R&D required.

Minimal onsite experience with ozone handling. Process control and analysis requirements not defined. Offgas requirements somewhat complex.

Alternative # 1.28 - 1

Tank 48 SEE

Idea Pro-Forma

Robustness

Unknown
Ozonolysis generally used for low concentration of soluble organic wastes or ultrapure water, not 2 wt% insoluble organics. Low solubility of gas in salt solution reduces effectiveness.

System Impacts

None known - too little known to evaluate

Risks

May not work
foam generation
Permitting
Tar formation in aqueous product

Alternative # 1.28 - 1

Tank 48 SEE

Idea Pro-Forma

Additional Comments

Alternative #1.28 - 1

Tank 48 SEE

Idea Pro-Forma

Category	6.0 Canyon	**Date**	2/1/2006
Alternative	#1.3 - 3	**Phone**	8-3354
Originator	Renee H. Spires	**Dept**	

Title

Direct Acid Hydrolysis in 221-H

Description

Chemically decompose the TPB in the dissolver within a Canyon facility by a combination of low pH (acid addition), increased temperature, and catalyst addition. Resulting release of benzene is removed through the dissolver off gas ventilation system. Remaining salt solution returned to Tank Farm.

Process Flow

Provide dedicated transfer path or above grade temporary transfer line from Tank 48 to the Canyon facility. This will be a batch process of around 3,000 gal in the 6.4D Dissolver. The 6.1D Dissolver could be added in improve throughput by about 50%. Transfer the solution to a bicell. Use the bicell to transfer material to the centrifuge feed tank. Use the centrifuge to concentrate the material and remove nitrite. Could also add FS to destroy nitrite. Issue will be the benzene concentration in the liquor. The liquor will be acidified and evaporated.

Transfer the concentrated solids to the dissolver. Acid is added to reduce pH. Catalyst is introduced to provide desired reaction rate. Decompose the waste by heating the tank contents to 95-135 °C as needed to decompose all TPB. The dissolver will have to be inerted for flammability control. Benzene will be exhausted in the tank vapor purge offgas stream and vented to the atmosphere via the existing off-gas system. Treated waste can be sampled, evaporated, and transferred to Tank Farm. Rinse wall film into bottom of Tank 48 during transfer to Canyon facility.

Advantages

1. No waste to Saltstone
2. Reuse of existing facility

Disadvantages

1. New Safety Basis development required
2. Dissolver must be inerted
3. Resolutions of tarry substances by destruction of nitrite
4. Permitting of Canyon facility to process waste and exhaust benzene

Pass/Fail PASS

Comments

Tank 48 SEE

Idea Pro-Forma

Alternative # 1.3 - 3 **Process Diagram (Optional)**

Process Flowsheet- Acid Hydrolysis in Canyon

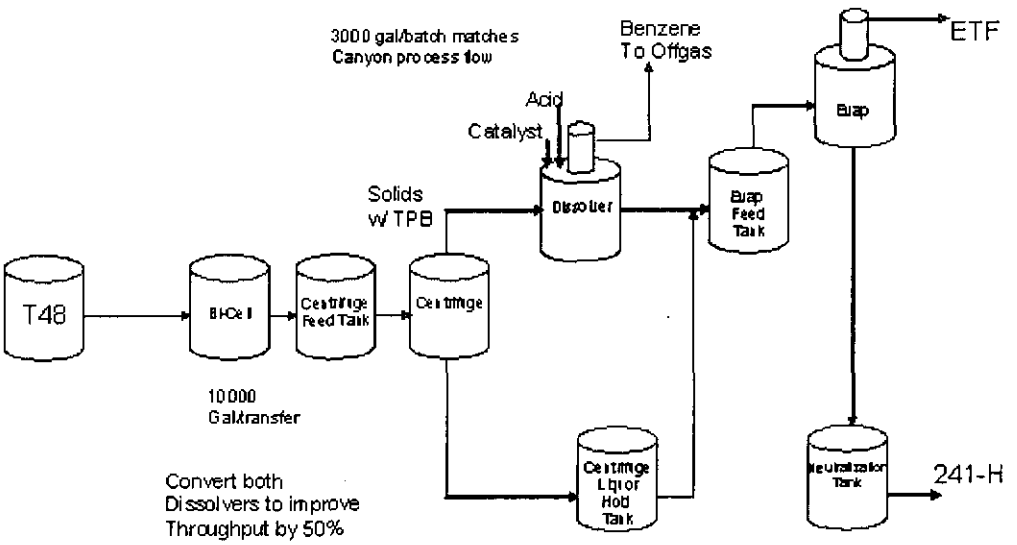

Tank 48 SEE

Idea Pro-Forma

Cost

Upfront Project Cost
* SRNL costs to set up flowsheet assume $500K
* Transfer to Canyon procedures, training, DSA mods and comp measures assume $2M
* Canyon DSA mods to decompose TPB assume $12M
* Cold chemical piping assume $2M
* Canyon jumpers assume $10M

Operations
* labor assume facilities can absorb these transfer activities
* cold chems assume $5/gal for 500K gal or $2.5M
* nitrogen in Canyon assume $1M
* canyon operations $100M

Schedule

One year to design and set up safety basis.
One year to fabricate and install transfer line, cold chemical services, and Canyon jumpers.

Tank 48 return to service by FY09

TPB destruction by FY09

Technical Maturity

High
R&D is required to set up a flowsheet.

Alternative # 1.3 - 3

Tank 48 SEE

Idea Pro-Forma

Robustness

Process will work.
MOC control would be required in Canyon dissolvers, nitrogen would need to be added to system.
Centrifuge would run basic - that is a change.
Would also have to run the dissolver condenser to not condense benzene.

System Impacts

Assume 500K gallons transferred to Canyon, 10K at a time. 50 transfers.

For 1 dissolver @ 1 batch per week, 3.3 years of Canyon operation
For 1 dissolver @ 2 batches per week, 1.7 years of Canyon operation

For 2 dissolvers @ 1 batch per week, 2.2 years of Canyon operation
For 2 dissolvers @2 batches per week 1.1 years of Canyon operation.

Risks

Permitting for Canyon is an issue.

Alternative #1.3 - 3

Tank 48 SEE

Idea Pro-Forma

Additional Comments

Alternative #1.3 - 3

Tank 48 SEE

Idea Pro-Forma

Category	Type IV Tank & New Facility	**Date**	
Alternative #	1.4 - 1	**Phone**	
Originator	Bill Wilmarth	**Dept**	

Title

Park in Tank 24 and Steam Reforming in New Facility

Description

Transfer material to a Type IV tank for interm storage until a newly constructed unit is completed to perform Steam Reforming process. At completion of processing transfer the material to a waste tank.

Process Flow

The tank waste is mixed in a batch/feed tank with select co-reactants, including the additives necessary to make the final product. Additional solid co-reactants, such as granular carbon and iron oxide reductants, are co-fed to the fluidized bed. Nitrates and nitrites turn into nitrogen gas. The upper zone of the fluid bed is operated under oxidizing condition by injection of oxygen into the upper zone. The oxidizing zone converts residual carbon reductants and organics into carbon dioxide and water vapor. Evaporation of all liquid.

Converts the sodium, potassium, and aluminum into a stable mineralized product. The mineral product contains any radionuclides and inorganic elements in the waste feed stream in the form of oxides, carbonates, aluminates and/or silicates.

Converts the organics into CO2.

Reduction and stabilization of any hazardous metals. For example hazardous metals such as Cr+6 are reduced to a non-hazardous valence state, e.g. Cr+3, and are chemically bound in the solid product.

Advantages

* Tk 48 Ci disposed of somewhere besides State of SC
* Recovers Tk 48 in FY09
* Dispositions TPB by FY12
* low operating cost $6M
* new facility could be used to treat other treatment waste streams

Disadvantages

* high up front project cost of $62M
* while the basic process is mature, it would require tailoring to adapt to our high rad, remotely operated environment

Pass/Fail PASS

Comments

Tank 48 SEE

Idea Pro-Forma

Alternative #1.4 - 1 **Process Diagram (Optional)**

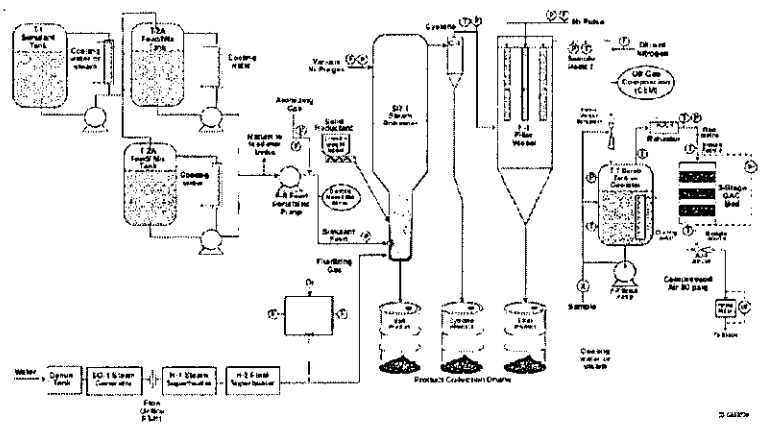

Figure 2-1 Fluidized bed test system process flow and instrumentation diagram.

The test system is classified as a bench-scale system because the fluidized bed section itself has a six-inch nominal inside diameter. Experience at the INEEL with fluidized beds ranging in diameters from as small as 3 inches up to 12 inches has shown that a 6-inch diameter bed is typically the smallest size that still provides bed dynamics that approach those of larger beds. Even with a 6-inch bed diameter, the bed may operate in a slugging mode, rather than in a bubbling mode that is more typical of larger-diameter full scale beds. The 6-inch diameter bed is a reasonable compromise between a bed large enough to provide representative test data and a system small enough to control testing and waste disposal costs.

The balance of the test system, including feed systems, the fluidized bed vessel that includes the bed section and the freeboard (bed disengaging) section, the product collection and solids management systems, and off-gas treatment and waste collection systems cover a footprint of about 20 ft by 20 feet. All wetted components are constructed from corrosion resistant materials. Equipment and piping are fabricated from 316 stainless steel except for the reformer vessel, which is fabricated from Inconel 800H and the distributor manifold that is fabricated from Inconel 625. The system can be manually controlled or automatically controlled using a Process Logic Controller (PLC) system with multiple human-machine interface (HMI) stations.

Tank 48 SEE

Idea Pro-Forma

Cost

Upfront Project Cost
* mods to Tk 48 to support transfer assume $2M
* mods to transfer system to support Tk 48 to Tk 24 transfer assume $2M
* mods to Tk 24 to receive and store Tk 48 waste assume $12M
* new steam reforming facility assume $50M
* R&D $4M

Operations
* labor assume HTF adds 3 operators, 2 mechanics, 2 RadCon and 1 FLS to each of 4 shifts for 3 years or $2M (8 FTE x 4x$80 k/FTE/yr x 3 yrs = $7.7M
* assume materials, consumables, steam, air, etc., at $4M ($2M/yr x 2 yrs)
* additional DWPF cannisters $10M

Total Cost
* $70M + $22M = $91M

Schedule

FY06
*develop conceptual design and estimate, * develop and approve safety strategy, * obtain regulatory and stakeholder support
FY07
* initiate detailed design for Tk 48, Tk 24, and new steam reforming facility, * start procurement of engineered equipment, * initiate field work
FY08
*complete design, * complete field work on Tk2 48 and 24, * continue field work on new facility
FY09
* complete transfer of waste from Tk 48 to Tk 24, * recover Tk 48, * continue field work on new facility
FY10
* complete field work on new facility, * initiate operations
FY11-12
* complete processing

Tank 48 return to service by FY09

Technical Maturity

Scale would be that of the STAR facility to avoid scale-up issues. WSRC is not the 'Subject Matter Expert' on this process
Simulant testing was successful, actual waste testing would be needed.

Alternative # 1.4 - 1

Tank 48 SEE

Idea Pro-Forma

Robustness

Process is very robust variations in the feedstream such as introduction of washwaters would not affect perform

System Impacts

* Space in Tank 24 will be lost to other uses
* Transfers to Tk 24 will interfere with other planned transfers
* operation of new steam reforming plant will require a new operating crew

Risks

* Permitting by SCDHEC for construction and operation
* Storage in Type IV tank for an extendecd timeframe
* Actual waste performs differently than simulant
* Disposal path for waste residue not completely certain

Opportunities

* new facility could have many other beneficial uses
* could ship residue to WIPP

Alternative # 1.4 - 1

Tank 48 SEE

Idea Pro-Forma

Additional Comments

Re-dissolve the solids and transfer the liquid back to the Tank Farm
DWPF loading issues
Permit available to build a modular facility, environmental air releases are below any threshold
New process would require new safety basis

Alternative # 1.4 - 1

Tank 48 SEE

Idea Pro-Forma

Category	Tank 48	**Date**	1/24/2006
Alternative #	1.4 - 2	**Phone**	8-2980
Originator	Neil Davis	**Dept**	LWD-Salt

Title

Direct feed to small scale Steam Reforming process in 96H

Description

General Description - Transfer Tank 48H waste to a new small scale (0.25 gpm) Fluidized Bed Steam Reforming process installed in the 241-96H building based on the design of the existing test facility at Hazen, CO. Treat the waste to destroy organic components using a carbonate based material as the fluidized bed. The bed solids are dissolved and transferred to a nearby waste tanks for incorporation into a future sludge batch.

Process Flow - The waste is mixed in Tank 48H using existing slurry pumps. The well mixed waste is periodically transferred into a small (500 gal) batch feed tank mounted in a riser in Tank 48H. The feed tank contents are continously transferred to the steam reformer inside 241-96H at a rate of about 0.25 gpm. Additional solid co-reactants, such as granular carbon or sugar and iron oxide reductants, are co-fed to the fluidized bed. Nitrates and nitrites in the waste are converted into nitrogen gas. The upper zone of the fluidized bed is operated under oxidizing condition by injection of oxygen into the upper zone. The oxidizing zone converts residual carbon reductants and organics into carbon dioxide and water vapor. The process converts the sodium, potassium, and aluminum present in the Tank 48H waste into a stable mineralized product. The mineral product contains most of the radionuclides and inorganic elements in the waste feed stream in the form of oxides, carbonates, aluminates and/or silicates. The organics are converted into CO_2. Hazardous metals such

Advantages

* The steam reforming process has been successfully tested with Tank 48H simulant waste
* The steam reforming process is currently being used to treat highly radioactive waste (Erwin, TN)
* Tank 48H radioactive components are disposed of in a Federal Repository
* Tank 48H waste is dispositioned and the tank is recovered for Tank Farm use by 1/2010
* The Tank 48H waste is not transferred to another tank prior to disposition

Disadvantages

* Some real waste testing is needed to fine tune the flowsheet and to define operational parameters
* The schedule will be very challenging to design, fabricate, install and operate the facility to have all waste dispositioned by 1/2010

Pass/Fail PASS

Comments

Tank 48 SEE

Idea Pro-Forma

Alternative # 1.4 - 2 **Process Diagram (Optional)**

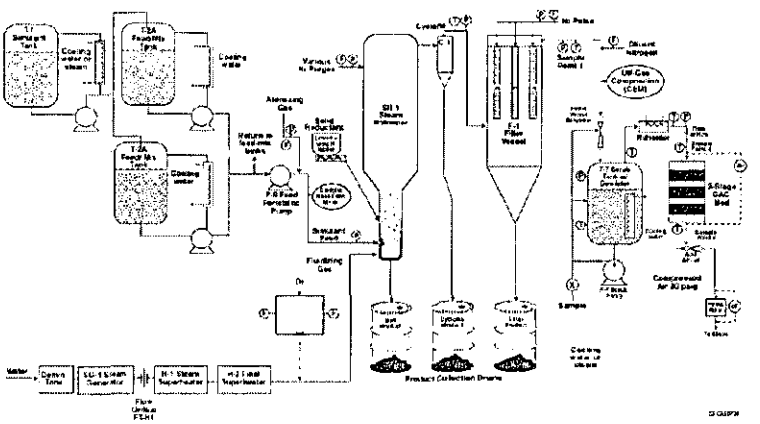

Figure 2-1. Fluidized bed test system process flow and instrumentation diagram.

The test system is classified as a bench-scale system because the fluidized bed section itself has a six-inch nominal inside diameter. Experience at the INEEL with fluidized beds ranging in diameters from as small as 3 inches up to 12 inches has shown that a 6-inch diameter bed is typically the smallest size that still provides bed dynamics that approach those of larger beds. Even with a 6-inch bed diameter, the bed may operate in a slugging mode, rather than in a bubbling mode that is more typical of larger-diameter full scale beds. The 6-inch diameter bed is a reasonable compromise between a bed large enough to provide representative test data and a system small enough to control testing and waste disposal costs.

The balance of the test system, including feed systems, the fluidized bed vessel that includes the bed section and the freeboard (bed disengaging) section, the product collection and solids management systems, and off-gas treatment and waste collection systems covers a footprint of about 20 ft by 20 feet. All wetted components are constructed from corrosion resistant materials. Equipment and piping are fabricated from 316 stainless steel except for the reformer vessel, which is fabricated from Inconel 800H and the distributor manifold that is fabricated from Inconel 625. The system can be manually controlled or automatically controlled using a Process Logic Controller (PLC) system with multiple human-machine interface (HMI) stations.

Tank 48 SEE

Idea Pro-Forma

Cost

Upfront Project Cost
* process development including real waste testing assume $3M
* mods to Tank 48H to support transfer to 241-96H assume $2M
* D&R of 241-96H to make room for new equipment assume $8M
* cost of vendor supplied modular equipment assume $20M
* mods inside 241-96H to connect existing infrastructure to new equipment assume $2M

Operations
* labor assume 3 operators, 1 mechanic, 1 RadCon and 1 FLS to each of 4 shifts for 2 years or $4M (6 FTE x 4 x $80 k/FTE/yr x 2 yrs = $3.8M
* assume materials, consumables, steam, air, etc., at $4M ($2M/yr x 2 yrs)

Total Cost
* $35M + $8M = $43M

Schedule

FY06
*develop conceptual design and estimate, * develop and approve safety strategy, * obtain regulatory and stakeholder support
FY07
* complete detailed design for Tank 48H, 241-96H D&R, new steam reforming equipment, and infrastructure connections, * complete 241-96H D&R, * start procurement of engineered equipment, * initiate fabrication of steam reforming equipment, * initiate field work on Tank 48H
FY08
* complete field work on Tank 48H, * complete steam reforming equipment fabrication, * complete installation of steam reforming equipment in 241-96H, * complete connection of steam reforming equipment in 241-96H, * complete startup testing, * initiate processing Tank 48H waste
FY09
* continue processing Tank 48H waste
FY10
* complete processing Tank 48H waste, * rinse Tank 48H, * complete processing Tank 48H residual waste down to about 12 kg TPB by January, 2010 by transferring the flush solution to Tank 50H which has been previously prepared to receive this waste in support of the MCU project

Technical Maturity

* SRNL successfully performed crucible tests using simulant Tank 48H waste showing that organics were destroyed and that the bed solids were compatible with the DWPF process
* Small scale (0.25 gpm) tests were successfully performed at the Hazen, CO pilot scale test facility using simulant Tank 48H waste agian showing that organics were destroyed and that the bed solids were compatible with the DWPF process
* FBSR is currently being used to treat highly radioactive solid and liquid waste at the STAR facility in Erwin, TN
* The DOE Idaho site has selected FBSR to treat the Sodium Bearing Waste that contains organics as well as Cs-137 at similar concentrations to Tank 48H. This simulant waste was recently successfully treated in tests at the hazen, CO pilot scale facility.
* Despite the successful testing using simulants at the Hazen, CO test facility and the successful ongoing operation at Erwin, TN, actual Tank 48H waste testing will be needed to confirm that FBSR is a viable process and to optimize operating parameters.

Alternative # 1.4 - 2

Tank 48 SEE

Idea Pro-Forma

Robustness

* The FBSR process is very robust. The high temperature (600-700oC) and oxidizing environment is well known to effectively destroy organic compounds.
* The FBSR process can tolerate variations in the feedstream such as introduction of washwaters that would not affect performance.

System Impacts

* Impacts to other Tank Farm operations are expected to be minimal due to the close proximity ofTank 48H to building 241-96H. Feed from Tank 48H to the FBSR will be via a new dedicated above grade transfer line.
* Offgas from the FBSR process will be exhausted to the atmosphere via existing equipment designed for that putpose in support of the In-Tank Precipitation process. The ITP process was configured and permitted to handle significantly more benzene than will be generated by FBSR.
* The FBSR solids will be in a carbonate form. The solids will be dissolved in water and transferred to a nearby waste tank via a new dedicated above grade shielded transfer line.

Risks

Risks
* The schedule is based upon leveraging the fact that we are using the existing design of the Hazen, CO facility to quickly demonstrate compliance with DOE 413.3 so that procurement and fabrication of equipment can start quickly.
* Actual waste testing may perform differently than simulant thus driving the need for design changes from the Hazen, CO facility
* SCDHEC permits for construction and operation could delay project execution
* The ability to dissolve the carbonate bed solids and transfer to a nearby tank has not been demonstrated and is probably less mature than the other FBSR unit operations

Opportunities
* The FBSR process could have many other beneficial uses, particularly if scaled up
* The cost of 241-96H D&R could be reduced if the FBSR equipment could be fitted into the 241-96H stripper are or the north side of the hold tank area. This would eliminate the need to D&R the two 11,000 gal hold tanks which is the major cost item in the D&R estimate.

Alternative # 1.4 - 2

Tank 48 SEE

Idea Pro-Forma

Additional Comments

The schedule for this alternative is extremely aggressive. It is based on proceeding quickly through the development of the PDSA and design in order to get approval to start equipment procurement and fabrication. This will be facilitated by leveraging the fact that the design of the Hazen, CO test facility is complete and several different simulant waste streams have been successfully treated there.

Alternative # 1.4 - 2

Tank 48 SEE

Idea Pro-Forma

Category	Saltstone	**Date**	1/24/2006
Alternative	#1.5 - 2	**Phone**	8-2980
Originator	Neil Davis	**Dept**	LWD-Salt

Title

Direct Aggregation to Saltstone

Description

General - This option involves feeding Tank 48 waste to Saltstone in concert with the DSS stream from MCU. Saltstone Vault #4 is modified to accept waste at the 100 kgal/wk rated capacity. Assume about 4 Mgal of grout will be required to disposition all waste.
Transfer to Tank 50 - Tk 48 waste is transferred to Tk 50 in about 30 small batches. A new dedicated above grade shielded transfer line bewteen Tks 48 and 50 is needed.
Storage in Tank 50 - Tk 48 waste is transferred to Tk 50 in about 30 small batches. Tk 50 will require vapor space mixing and monitoring.
Vault Mods - TPB from Tk 48 and Isopar from MCU will drive the need for ventilation mods in the vault cells at the 100 kgal/wk desired production rate. Assume that 4 existing cells with sheet drains and leachate collection systems are nitrogen inerted. Inerting system consists of: 2 package nitrogen gas generating plants, 1 liquid nitrogen storage tank with ambient air vaporizer to serve as backup, power supply from DWPF to new equipment, and new instrument loop from cells to nitrogen plant to meter in nitrogen blanket as needed. Cells are capped when full and nitrogen disconnected.

Advantages

* Recovers Tank 48 AND dispositions TPB in FY09
* Does not increase TPB footprint to other HLW tanks

Disadvantages

* All Tk 48 Ci end up in State of SC
* MCU ops, having a higher priority, may slow down workoff rate of Tk 48 waste

Pass/Fail PASS

Comments

Tank 48 SEE

Idea Pro-Forma

Alternative #1.5 - 2

Process Diagram (Optional)

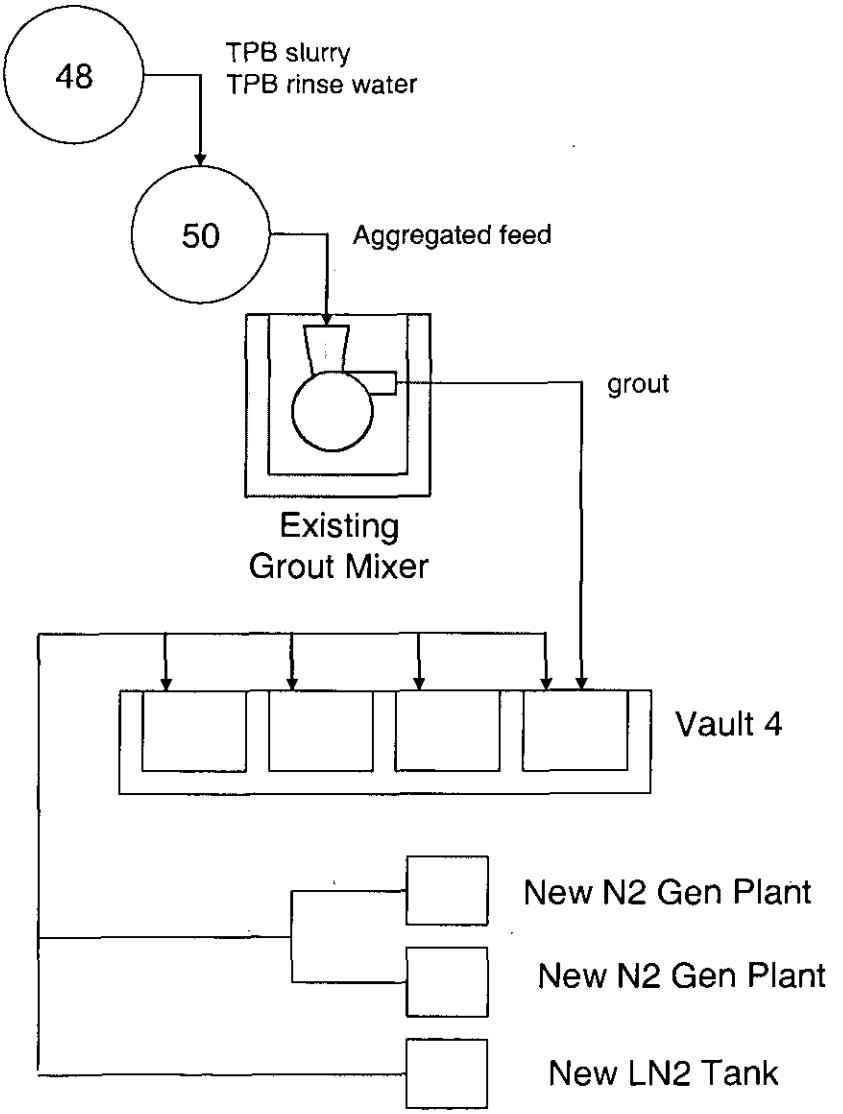

Tank 48 SEE

Idea Pro-Forma

Cost

Upfront Project Cost
* baseline option cost ($33.5M)
* nitrogen $5M

Operations
* labor assume HTF and Saltstone can aborb these activities
* cold chems assume $5/gal for 1.8 Mgal or $9M, including liquid nitrogen

Total cost $38.5M + $9M = $47.5M

Schedule

FY06
*develop conceptual design and estimate, * develop and approve safety strategy, * initiate detailed design for Tk 48 Tk 50, and Vault 4, ,* start procurement of engineered equipment, * initiate field work
FY07
* obtain regulatory and stakeholder support, * complete detailed design, *complete field work on Tks 48 & 50
FY08
*complete field work at Vault 4
FY09
* fill Vault 4 at 100 kgal/wk for 30 wks for 3 Mgal total

Tank 48 return to service by FY09

Technical Maturity

* This is essentially the Aggregation baseline with nitrogen inerting mods at Saltstone vault cells. All aspects are technically mature.

Alternative # 1.5 - 2

Tank 48 SEE

Idea Pro-Forma

Robustness

Very robust. Aggregation will disposition the TPB.

System Impacts

Should not interfere with MCU startup or production rate. Assume MCU has priority and add in Tk 48 waste as th schedule allows. This should be complete in 1 year.

Risks

* Regulatory - SCDHEC may object to 800,000 Ci of Tk 48 waste going to Saltstone
* Cost - nitrogen inerting mods at Saltstone vaults may cost more then $5M
* TPB grout will pass the TCLP test but may not meet the intent of the test as benzene may leach out of the grout after the 30 day test is conducted

Opportunities

* may be able to rent nitrogen equipment
* may defer some cost of modifications at SPF

Alternative # 1.5 - 2

Tank 48 SEE

Idea Pro-Forma

Additional Comments

Planned aggregation volume from Tk 48 is about 3 Mgal. Assume that MCU will generate about 1 Mgal of DSS in FY09 that will be used to aggregate with Tk 48 waste thus no increase in volume to Saltstone.

The inerting system allows Saltstone to pour up to 100 kgal/wk in a cell while maintaining grout temp below 95oC. At this temp, benzene and Isopar will evolve into the cell vapor space. This is not a problem due to the inert atmosphere.

Alternative # 1.5 - 2

Tank 48 SEE

Idea Pro-Forma

Category	Type IV Tank & Saltstone	**Date**	1/25/2006
Alternative	#1.5 - 3	**Phone**	8-2980
Originator	Neil Davis	**Dept**	LWD-Salt

Title

Park in Tank 24 and Aggregate

Description

General - Transfer Tank 48 waste to Tank 24 in 2-3 big batch transfers. Store in Tank 24 until a suitable process window opens at Saltstone, presumably after MCU has operated in FY08-09. Aggregate to Saltstone per current baseline plan in a dedicated campaign.
Transfer to Tank 24 - Use existing transfer lines and jumpers. This will require a DSA change, new procedures and training and admin controls to prevent inadvertent transfer and leaks to diversion box sumps. Expected transfer volume is about 500 kgal including Tank 48 rinse water.
Storage - Waste will be stored 1-3 years until a new grout plant is ready. Liquid mixing will be required to periodically remove retained benzene. Assume two slurry pumps. Vapor space monitoring and mixing will be required. Assume recirc fan and LFL analyzers per recent Tank 50 design.
Transfer back to Tank 50 - Use existing transfer lines. Set up dedicated 2 headed jumpers in HDB-5, HDB-2 and HDB-7 to preclude inadvertent transfer. Assume 30 separate transfers. This will require a DSA change, new procedures and training and admin controls to prevent inadvertent transfer and leaks to diversion box sumps. Expected transfer volume is about 500 kgal.
Feed from Tank 50 - Vapor space monitoring and mixing will be required. Assume recirc fan and benzene analyzers per recent Tank 50 design.

Advantages

* Tk 48 recovered FY09
* TPB dispositioned FY11
* N2 inerting Vault cells good for MCU, Tk 48 and SWPF

Disadvantages

* All 800,000 Ci in Tk 48 end up in State of SC
* May be issue of TPB grout not meeting intent of TCLP

Pass/Fail PASS

Comments

Tank 48 SEE

Idea Pro-Forma

Alternative # 1.5 - 3 **Process Diagram (Optional)**

1.5-3 Transfer to Type IV PLUS Aggregation to Saltstone

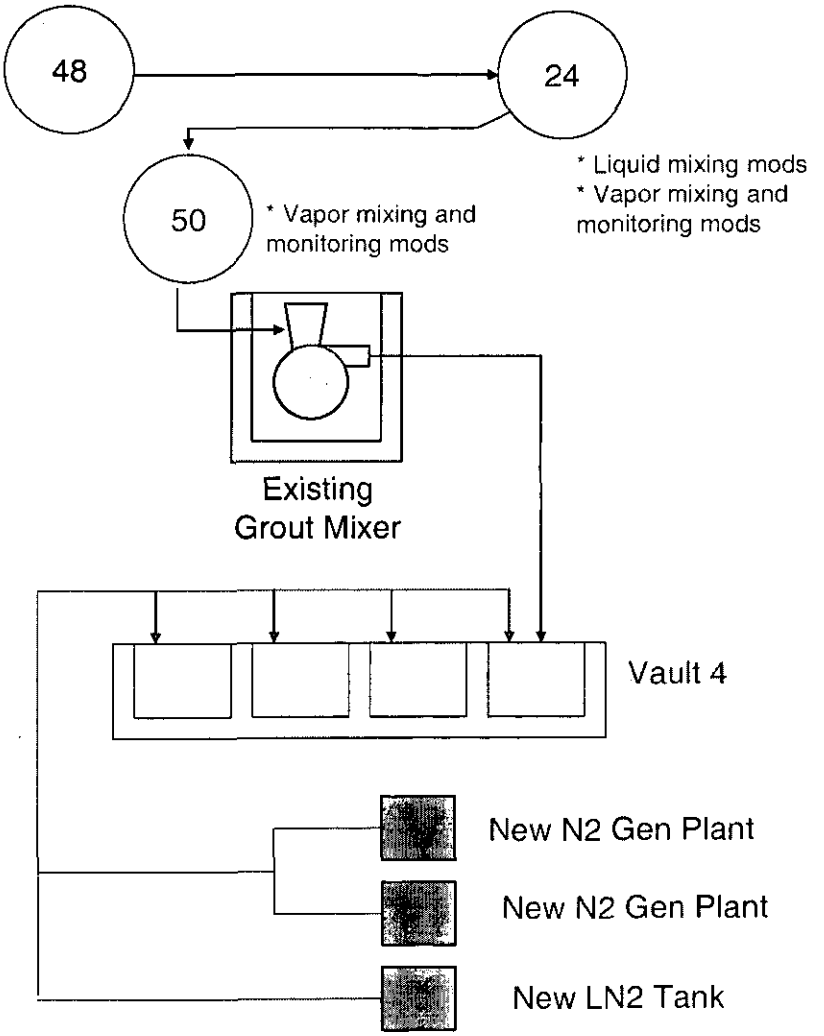

Tank 48 SEE

Idea Pro-Forma

Cost

Upfront Project Cost
* Baseline option ($33.5M)
* transfer to Tank 24 procedures, training, DSA mods and comp measures assume $2M
* storage in Tank 24 liquid and vapor space mixing and monitoring assume $12M
* transfer system mods to get back to Tank 50 assume $2M
* mods to Saltstone vaults to safely store TPB grout assume nitrogen inerting at $5M

Operations
* labor assume facilities can absorb these transfer activities
* cold chems at Saltstone assume $5/gal for 3 Mgal or $15M
* nitrogen at Saltstone assume $1M

Total cost $52.5M + $16M = $69M

Schedule

FY06
*develop conceptual design and estimate
FY07
*develop and approve safety strategy, * obtain regulatory and stakeholder support, * detailed design for Tk 24, Tk 50 and Saltstone, and * start procurement of engineered equipment
FY08
*complete design, * initiate construction
FY09
* complete construction, *transfer waste to Tk 24
FY10-11
* make grout at 30 kgal/wk, 1.5 Mgal/yr for 2 years

Technical Maturity

* Transfer to Type IV tank will be tricky in DSA space but the Engg transfer Cog thinks it is doable
* Nitrogen inerting vault cells is mature technology

Alternative # 1.5 - 3

Tank 48 SEE

Idea Pro-Forma

Robustness

Very robust. TPB will be dispositioned.

System Impacts

* Space in Tank 24 will be lost to other uses
* Transfers to and from Tk 24 will interfere with other planned transfers
* Grouting TPB in Saltstone alone will require a 1 to 2 year operating window (e.g., 30 kgal/wk to 60 kgal/wk) wh MCU must be shut down
* Re-routing from Tank 24 to Tank 50 impacts the utility of Tank 50

Risks

* TPB grout may not meet intent of TCLP, benzene is a "D Listed" hazardous waste and may leach out of the grou over time even though the grout may pass a TCLP test performed 30 days after pouring the grout
* The operating window at Saltstone after MCU operations and SWPF startup may close if either (1) SWPF is accelerated or (2) a decision is made to operate MCU more than 3 years
* SCDHEC may not support sending Tk 48 to Saltstone given the delay to SWPF startup from 2009 to 2011

Opportunities

* Could find a way to combine MCU and TPB streams to Saltstone
* MCU could pick up some of this scope ahead of this project (Tank 50 and SPF)

Alternative # 1.5 - 3

Tank 48 SEE

Idea Pro-Forma

Additional Comments

None

Alternative # 1.5 - 3

Tank 48 SEE

Idea Pro-Forma

Category	Type IV Tank & Closure Tank	**Date**	1/24/2006
Alternative #	1.5 - 5	**Phone**	8-2980
Originator	Neil Davis	**Dept**	LWD-Salt

Title

Park in Tank 24 and Aggregate into Tanks 21-23

Description

General - Transfer Tank 48 waste to Tank 24 in 2-3 big batch transfers. Store in Tank 24. Build new grout plant near Tank 24. Feed Tank 24 to the new plant and place resultant grout into Tanks 21-23.
Transfer to Tank 24 - Use existing transfer lines and jumpers. This will require a DSA change, new procedures and training and admin controls to prevent inadvertent transfer and leaks to diversion box sumps. Expected transfer volume is about 500 kgal including Tank 48 rinse water.
Storage - Waste will be stored 1-3 years until a new grout plant is ready. Liquid mixing will be required to periodically remove retained benzene. Assume two slurry pumps. Vapor space monitoring and mixing will be required. Assume recirc fan and benzene analyzers per recent Tank 50 design. Assume a new shielded above grade transfer line to the new grout plant.
Grout Plant - a new shielded modular plant is needed with cold chemical supply system for cement, slag, fly ash and other additives. About 3M gal of grout will be produced. Assume rate is 50-100 gpm, 5 days per week. The grout mixer could be emplaced in a nearby unused shielded cell such as the new CTS pit. New above grade shielded grout lines to Tks 21-23 will be needed. About 2.2 Type IV tanks will be needed to hold the 3 M gal of grout.

Advantages

* No new technology involved
* Tank 48 recovered FY09
* Avoids cost of grout for Tks 21-23

Disadvantages

* Cost - upfront cost will be about $15M, ops cost about $17M
* Process Safety - DNFSB may not support storing Tank 48 waste in a non-compliant tank
* Schedule - waste not dispositioned until FY15
* Regulatory - need new permits to grout in Tank Farm, all Tk 48 Ci end up in State of SC

Pass/Fail PASS

Comments

Tank 48 SEE

Idea Pro-Forma

Alternative # 1.5 - 5 **Process Diagram (Optional)**

1.5-5 Use to Grout a Closure Tank

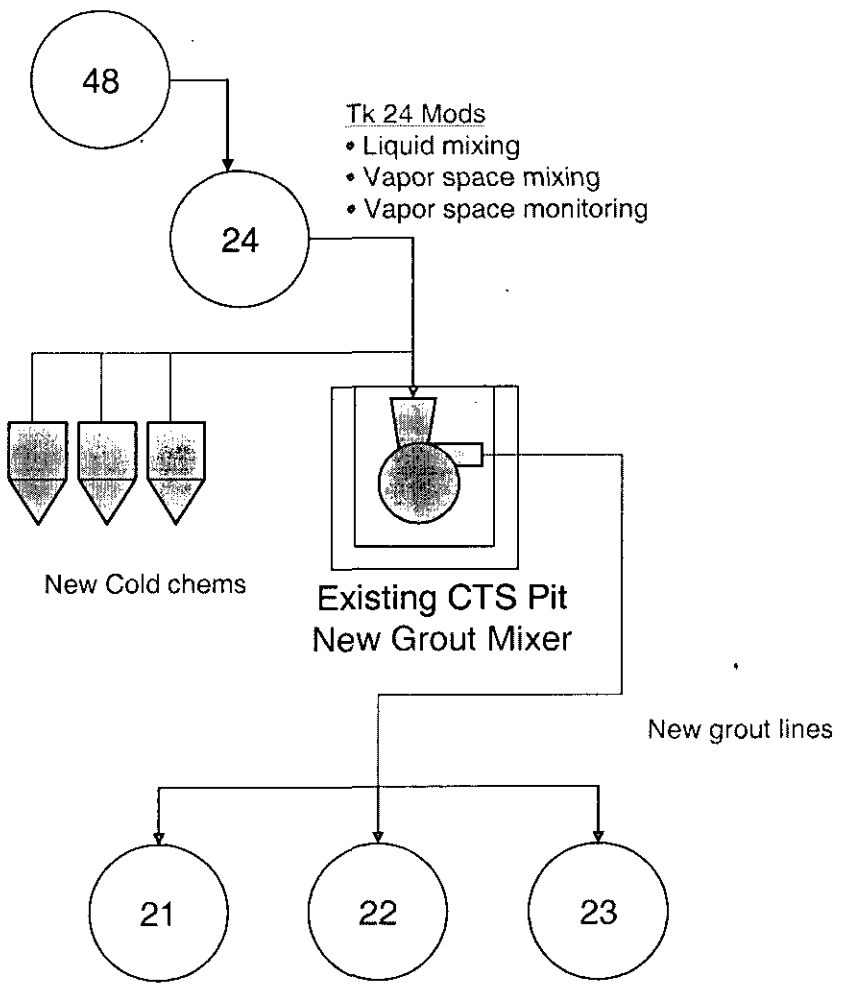

Tank 48 SEE

Idea Pro-Forma

Cost

Upfront Project Cost
* transfer to Tank 24 assume $2M for procedures, training, DSA mods and comp measures
* storage in Tank 24 assume $12M for liquid and vapor space mixing and monitoring
* new grout plant in CTS with cold chem support assume $20M

Operations
* labor assume 4 operators, 2 maintenance, 2 RadCon for 2 yr at $2M (9 FTE at $80 k/yr for 2 yr = $1.5 M, 1 yr train and 1 yr to operate)
* cold chems assume $5/gal for 3 Mgal or $15M

Total cost $34M + $17M = $51M

Schedule

FY06
*develop conceptual design and estimate
FY07
*develop and approve safety strategy, * obtain regulatory and stakeholder support, * initiate detailed design for Tank 24 and grout plant, and * start procurement of engineered equipment
FY08
*complete design, * initiate construction
FY09
* complete construction, *transfer waste to Tank 24
FY20
* add grout to Tks 21-23 at 50 gpm, 3 kgal/hr, 24 kgal/day, 96 kgal/wk for 30 wks

Technical Maturity

Transfer - this will be tricky in DSA space but is considered "doable" by the transfer engg COG
Storage - very mature based on 15 years of actuals in Tank 48 and new design for Tank 50 that will be applied to Tank 24
New Grout Plant - should be a straight forward package unit with some modifications to adapt it to a shielded application
Tank Grouting - current vault design has leachate collection system to remove bleedwater, will need to precisely control bleedwater to avoid accumulation. Also, moist atmosphere in tank during grout curing carries cement particulate up into HEPA system, may need scrubber or A LOT of roughing filter changeouts, and may need improved condensing in HVAC train.

Alternative # 1.5 - 5

Tank 48 SEE

Idea Pro-Forma

Robustness

Very robust. Grouting the waste is the baseline process.

System Impacts

* We will lose the use of Tank 24 from FY20 until it is closed
* Will be minor impacts to other transfers during FY09

Risks

* DNFSB and SCDHEC may not support storage of Tank 48 waste in Tank 24
* Bleedwater management may be problematic as the waste tanks do not have a leachate collection system like the vaults do
* Perched water table in Tks 21-24 area may be problematic
* Obtaining new permits to dispose of waste in a place other than Saltstone Vaults may be problematic
* TPB grout will pass the TCLP test but may not meet the intent of the test as benzene may leach out of the grout after the 30 day test is conducted

Alternative # 1.5 - 5

Tank 48 SEE

Idea Pro-Forma

Additional Comments

The $15M for grout cold chemicals (slag, flyash, cement and additives) avoids a similar cost that would be incurre buy grout to fill Tks 21-23 later. These tanks must be closed by FY22 anyway.

Alternative # 1.5 - 5

Attachment B –Scoring Results

Option Scores

			Cost		Schedule		Maturity							
			TEC & OPC	Operations	Tank 48 RTS	TPB Disp	Treatment	Rad Deployment	Scale	Development	Tech Maturity Sub-Total	Robust	System Impact	
Opt#	#	Title	0.17	0.08	0.2	0.1	0.05	0.05	0.05	0.05	0.2	0.15	0.1	Total
			1.1	1.2	2.1	2.2	3.1	3.2	3.3	3.4	3	4	5	
1.5	2	Direct Aggregation to Saltstone	75	100	90	75	95	100	100	100	99	100	100	**91**
1.5	3	Park in Tk 24 and Aggregate	50	100	90	25	95	100	100	100	99	100	75	**79**
1.4	2	Direct Feed to Small Scale Steam Reforming Process in 96H	75	100	50	50	100	100	100	65	91	100	80	**77**
1.3	3	Direct Acid Hydrolysis in 221H	100	0	90	75	100	50	100	75	81	75	50	**75**
1.5	5	Park in Tk 24 and Aggregate into Tks 21-23	75	100	90	0	80	100	100	90	93	50	90	**74**
1.4	1	Park in Tk 24 and Steam Reform in New Facility	25	75	90	25	100	100	100	65	91	100	75	**72**
1.27	2	Exchange/Extract in 221-H	100	25	90	75	80	100	75	20	69	50	75	**73**
1.23	1	Direct Wet Air Oxidation in 96H	100	100	50	50	100	50	100	20	68	75	75	**72**
1.23	2	Park in Tk 24 Wet Air Oxidation in New Facility	75	100	90	50	100	50	100	20	68	75	75	**76**
1.24	1	Direct Sodium Permanganate/Acid in 221H	100	0	90	75	80	100	25	55	65	75	50	**72**
1.16	1	Park in Tk 24 and Grout in Containers	75	25	90	0	80	100	100	80	90	50	100	**68**
1.18	3	Park in OWST and Bleed into Sludge Feed	75	100	50	0	50	100	100	75	81	75	100	**68**
1.18	4	Direct to DWPF Salt-Only Glass	75	0	90	75	90	100	25	50	66	50	50	**64**
1.27	1	Park in Tk 24 Solvent Extract TPB in MCU	75	25	90	25	80	100	75	20	69	50	75	**64**
1.24	2	Park in Tk 24 NaMNO4/Acid In H-Area Facility	75	0	90	25	80	100	25	55	65	75	50	**63**
1.26	1	Park at Saltstone and Aggregate	50	100	0	25	95	100	100	100	99	100	75	**61**
1.2	3	Park in Tk 24 Fenton's in H-Area Facility	75	100	90	25	85	0	50	55	48	20	75	**61**
1.28	1	Park in Tk 24 ZnO Catalyzed Ozone Oxidation in H-Area	50	75	90	25	70	0	25	20	29	0	75	**48**
1.22	2	Thermal/Catalytic in 2H Evaporator	75	100	50	50	75	0	0	25	25	25	50	**50**