OSR 45-24 (Rev 1-20-2009)

Calculation Cover Sheet

Project/Task SDIP - Saltstone	Calculation No. N-CLC-Z-00021	Project/Task No. Y544
Title Salt Solution Receipt Tank (SSRT) Dose Rate and Shielding Evaluation	Functional Classification PS	Sheet 1 of 43
	Discipline Nuclear	
Calc Level ☒ Type 1 ☐ Type 2	Type 1 Calc Status ☐Preliminary ☒Confirmed	
Computer Program No. OrigenARP, MCNP5, Excel, Word ☐N/A	Version/Release No. 5.1, 1.51, 2010, 2010	
Purpose and Objective The purposes of this calculation are to provide a dose rate profile and evaluate the shielding design for the two new ~60 kgal SSRTs at the Saltstone Facility when they receive and transfer decontaminated salt solution (DSS) from H-Tank Farm Tank 50 with a maximum cesium-137 (Cs-137) concentration of 0.0002 Curies/gallon (Ci/gal). The objectives are to meet radiation zoning criteria from Savannah River Site Radiological Design Requirements Engineering Standard No. 01064 and determine if any additional shielding is required to do so.	DC/RO	Date

Summary of Conclusion

The project's bulk shielding as designed is effective at maintaining dose rates inside, around and on top of the SSRT enclosure in accordance with radiation zoning criteria. Dose rates inside and on top of the enclosure are between 5-100 mrem/hr (Radiation Area; Rad Zone 4). Dose rates around the enclosure inside the fence are between 0.05-5.0 mrem/hr (Radiological Buffer Area; Rad Zones 2 & 3). Dose rates outside the fence are <0.05 mrem/hr (Controlled Area; Rad Zone 1). Penetrations in the SSRT enclosure walkplate do not significantly change dose rates above the walkplate thereby maintaining its Radiation Area status [i.e., do not result in the generation of a High Radiation Area (HRA)]. Transfer line dose rates are all <5.0 mrem/hr @ 30 cm which meets radiation zoning criteria. No additional shielding is required

An external dose assessment will be performed to ensure annual personnel doses associated with operating and maintaining the new SSRTs will meet the radiological design basis total effective dose limit of 1,000 mrem/person/year [Ref. 3.3].

Revisions

Rev #	Revision Description
0	Confirmed calculation; complete re-write of preliminary revisions A & B including title change to reflect project changes

Sign Off

Rev #	Originator (Print) Sign/Date	Verification/Checking Method	Verifier/Checker (Print) Sign/Date	Manager (Print) Sign//Date
0	M. A. Broome 11/29/12	☐ Design Check (GS/PS only) ☒ Document Review ☐ Qualification Testing ☐ Alternate Calculation ☐ Operational Testing	C. C. Swanek 11/29/12	R. D. Thames 11/29/2012
		☐ Design Check (GS/PS only) ☐ Document Review ☐ Qualification Testing ☐ Alternate Calculation ☐ Operational Testing		

Additional Reviewer (Print)	Signature	Date
Design Authority (Print) W. C. Miles	Signature	Date 11/29/2012
Release to Outside Agency (Print)	Signature	Date

Security Classification of the Calculation

UNCLASSIFIED

Calculation Cover Sheet

RECORD OF REVISION						
Project: SDIP - Saltstone					Calculation No.: N-CLC-Z-00021	
Subject: Salt Solution Receipt Tank (SSRT) Dose Rate and Shielding Evaluation					Sheet No.: 2 of 43	
Originator: M. A. Broome		Date:	Checker: C. C. Swanek		Date:	Rev. No.: 0
REV. NO.	PAGES REPLACED	PAGES ADDED	PAGES DELETED	PAGES REVISED	DESCRIPTION OF REVISIONS	
A		All			Original draft.	
B				6	Added statement in Open Items regarding corrosion allowance.	
0				All	Issuance of confirmed calculation.	

TABLE OF CONTENTS

Section Page

LIST OF TABLES 4

LIST OF FIGURES 4

LIST OF APPENDICES 4

1.0 INTRODUCTION 5

2.0 OPEN ITEMS 6

3.0 REFERENCES 6

4.0 INPUTS AND ASSUMPTIONS 6

4.1 Inputs 6

4.2 Assumptions 11

5.0 ANALYTICAL METHODS AND COMPUTATIONS 11

5.1 Source Term Generation with ORIGEN-ARP Software 11

5.2 Radiation Transport Modeling with MCNP Software 12

5.3 Data Manipulation & Processing with Microsoft Excel and Word 14

6.0 RESULTS 15

7.0 CONCLUSIONS 15

8.0 APPENDICES 15

List of Tables

Table 1 – Radiation Zoning Criteria 5
Table 2 – Schedule 40 Pipe Dimensions 9
Table 3 – Material Compositions, Weight Fractions & Densities 10
Table 4 – ICRP 74 Gamma Flux-to-Dose Rate Conversion Factors 10
Table 5 – Source Energy Grouping and Distribution 11

List of Figures

Figure 1 – SSRT Schematic Layout 5
Figure 2 – SSRT Details 7
Figure 3 – SSRT Enclosure Details 7
Figure 4 – Pump Cell Details 8
Figure 5 – Jacketed Transfer Line Details 8
Figure 6 – Penetration Details 9
Figure 7 – MCNP Representation of SSRTs & Enclosure 12
Figure 8 – MCNP Representation of Jacketed Transfer Lines 13
Figure 9 – MCNP Representations of Typical SSRT Walkplate Penetrations 14

List of Appendices

Appendix A – List of ORIGEN-ARP and MCNP Input/Output Files 16
Appendix B – ORIGEN-ARP Input File (0002.inp) 20
Appendix C – Example SSRT Enclosure MCNP Input File (SSRT) 21
Appendix D – Example Penetration MCNP Input File (N514) 28
Appendix E – Example Transfer Line MCNP Input File (4LINE20) 30
Appendix F – Source Volumes and Tally Multiplier Computations 32
Appendix G – Dose Rate Profile (mrem/hr) for SSRT Enclosure 37
Appendix H – Dose Rates (mrem/hr) Through SSRT Enclosure Walkplate Penetrations 39
Appendix I – Dose Rates (mrem/hr) from Unshielded 1” Diameter Transfer Lines (Schedule 40 Steel) 40
Appendix J – Dose Rates (mrem/hr) from Unshielded 2” Diameter Transfer Lines (Schedule 40 Steel) 41
Appendix K – Dose Rates (mrem/hr) from Unshielded 3” Diameter Transfer Lines (Schedule 40 Steel) 42
Appendix L – Dose Rates (mrem/hr) from Unshielded 4” Diameter Transfer Lines (Schedule 40 Steel) 43

1.0 INTRODUCTION

The Saltstone Production Facility (SPF) is being modified to include two ~60,000 gallon SSRTs. The purpose of these new tanks is to receive larger transfers of decontaminated salt solution (DSS) from Tank 50 in order to maintain tank space in the H-Tank Farm. The SSRTs are being designed to receive DSS with a bounding Cs-137 concentration of 0.0002 Ci/gal DSS [Ref. 3.1].

Because the SSRTs represent new, large source terms outside the 210-Z process building (see Figure 1), this calculation is necessary to estimate dose rates on and around them and evaluate the effectiveness of their bulk shielding (i.e., wall and roof thicknesses). The Radiological Engineering & Health Physics (RE&HP) group routinely uses the Monte Carlo N-Particle (MCNP) radiation transport computer code to accomplish this [Ref. 3.2]. Calculation results can be compared to radiation zoning criteria in Table 1 to determine if additional shielding needs to be incorporated into the project design as well as to assist facility Radiological Protection in developing appropriate radiological postings and access controls once the SSRTs become operational [Ref. 3.3].

This calculation includes dose rate estimates inside and outside the SSRT enclosure, above penetrations in the enclosure roof (walkplate), and from associated transfer lines.

Figure 1 – SSRT Schematic Layout
(NOTE: Not to Scale)

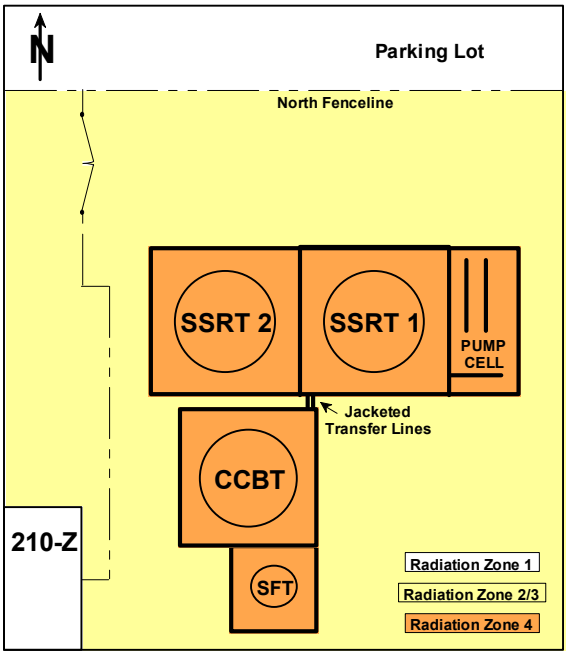

CCBT = Clean Cap Batch Tank; SFT = Salt Feed Tank

Table 1 – Radiation Zoning Criteria

Radiation Zone	Design Basis Maximum Area Radiation Dose Rate (mrem/hr)	Description	Location
1	D≤0.05 (@ 30 cm)	Non-Rad Continuous Occupancy;	North of Fenceline & 210-Z
2	D>0.05 and D≤0.5 (@ 30 cm)	Rad-Worker Continuous Occupancy RBA[1]	Saltstone Yard Outside Surrounding Enclosure, Inside Fenceline
3	D>0.5 and D≤5.0 (@ 30 cm)	Intermittent Occupancy RBA[1]	
4	D>5.0 and D≤100 (@ 30 cm)	Radiation Area	Inside and On Top of SSRT, CCBT and SFT Enclosures

[1]Radiological Buffer Area (RBA)

2.0 OPEN ITEMS

None

3.0 REFERENCES

3.1 U-TC-Z-00001, Rev. 7, *Task Requirements and Criteria Document, Salt Solution Receipt Tanks - Saltstone Facility Modifications,* 6/6/12.

3.2 *Monte Carlo N-Particle Version 5 Transport Code, MCNP5_RSICC, 1.51, Los Alamos National Laboratory*, 2008.

3.3 SRS Engineering Standards Manual WSRC-TM-95-1, Standard No. 01064, Rev. 7, *Radiological Design Requirements,* 1/24/12.

3.4 N-ESR-Z-00001, Rev. 1, *Technical Justification for Shielding Design Basis Values Supporting Salt Disposition Integration (SDI) Modifications at the Saltstone Production Facility (SDP),* 6/26/12.

3.5 CBI Document No. 174992-000-SP-000101, Dwg. No. 1, Rev. C, *General Elevation - SSR Tanks TK-0001 & TK-0002 (2) 26'-0 Dia x 19'-6 Flat Roof Tanks,* 3/21/11.

3.6 SRS Drawing No. C-CC-Z-00033, Rev. 2, *Saltstone Production Facility – Z-Area Tank 50 Return to Service SSRT Tank Enclosure Design,* 5/9/11.

3.7 SRS Drawing No. P-PA-Z-00027, Rev. 0, *Saltstone Production Facility SSRT Tank Enclosure Piping Arrangement Plan,* 11/25/12.

3.8 Design Change Form No. C-DCF-Z-00151, Rev. 0, *SPF-Z-Area Tank 50 Return To Service Salt Solution & Flush Wtr Tk Enclosure Piping Penetrations,* 6/28/10.

3.9 SRS Drawing No. C-SP-Z-00001, Rev. 1, *Z-Area – Tank 50 RTS SSRT Tank Enclosure Platform – Framing Sections & Details,* 8/8/11.

3.10 ASTM A312/A312M, *Standard Specification for Seamless, Welded, and Heavily Cold Worked Austenitic Stainless Steel Pipes,* www.astm.org, 2012.

3.11 PNNL-15870, Rev. 1, *Compendium of Material Composition Data for Radiation Transport Modeling,* March 2011.

3.12 ICRP 74, *Conversion Coefficients for use in Radiological Protection against External Radiation,* Pergamon Press, 1996.

3.13 Shlein, B. et al, *Handbook of Health Physics and Radiological Health, 3rd Edition.* Lippincott Williams & Wilkins, Philadelphia, 1998.

3.14 ORNL/TM-2005/39, Rev. 5.1.01, *ORIGEN-ARP: Automatic Rapid Processing for Spent Fuel Depletion, Decay, and Source Term Analysis,* March 2007.

3.15 N-ISV-B-00007, Rev. 0, *Initial Software Verification for Scale Version 6*, 9/22/10.

3.16 N-TR-B-00002, Rev. 0, *Software Validation and Verification Report for MCNP5 and MCNP4C2*, 7/10/06.

4.0 INPUTS AND ASSUMPTIONS

4.1 Inputs

4.1.1 Source Term

The source term corresponds to Phase II DSS referenced in the current Saltstone Facility shielding design basis [Ref. 3.4]. It is comprised of five gamma-emitting radionuclides at the following concentrations:

Co-60 @ 4.10E-06 Ci/gal;
Sb-125 @ 3.36E-05 Ci/gal;
Cs-134 @ 9.20E-07 Ci/gal;
Cs-137 @ 2.00E-04 Ci/gal; and
Eu-154 @ 6.79E-06 Ci/gal.

4.1.2 SSRT Details

A cross-sectional elevation of a steel SSRT is excerpted in Figure 2 [Ref. 3.5]. Its outside diameter is 26' (792.48 cm). The bottom plate is ½" (1.27 cm) thick. The roof plate and upper ring section are 5/16" (0.79 cm) thick. The lower ring section is $^{3}/_{8}$" (0.95 cm) thick. The bottom plate is sloped resulting in a tank height of 19'-6" (594.36 cm) on the low side and 18'-8 ¼" (569.60 cm) on the high side. For simplicity the tank is modeled as a right circular

cylinder with a flat bottom plate and an average height of 19'-1$^{1}/_{8}$" [= (18.6875' + 19.5')/2 = 581.98 cm]. The SSRT is filled with DSS to the 16'-10" (513.08 cm) level.

Figure 2 – SSRT Details

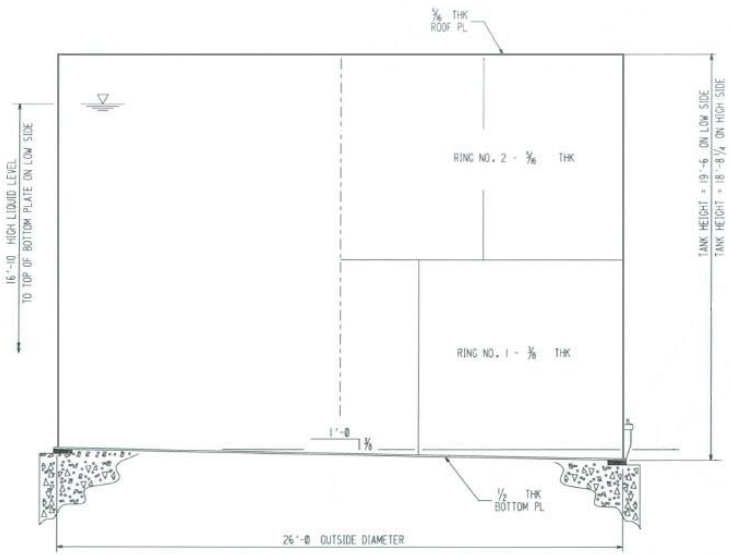

4.1.3 SSRT Enclosure Details

A plan view of the SSRT enclosure is excerpted in Figure 3 [Refs. 3.6 & 3.9]. MCNP models' origins are at the inside bottom center of SSRT 1 designated as (0, 0). Cells 1 and 2 have interior dimensions of 35.5' x 35.5' (1082.04 cm x 1082.04 cm). All exterior walls are 18" (45.72 cm) thick concrete except the North Wall of Cell 1 which is 24" (60.96 cm) thick. The interior walls between the cells are 18" (45.72 cm) thick concrete. The entire enclosure is covered by a ½" (1.27 cm) thick steel walkplate.

Figure 3 – SSRT Enclosure Details

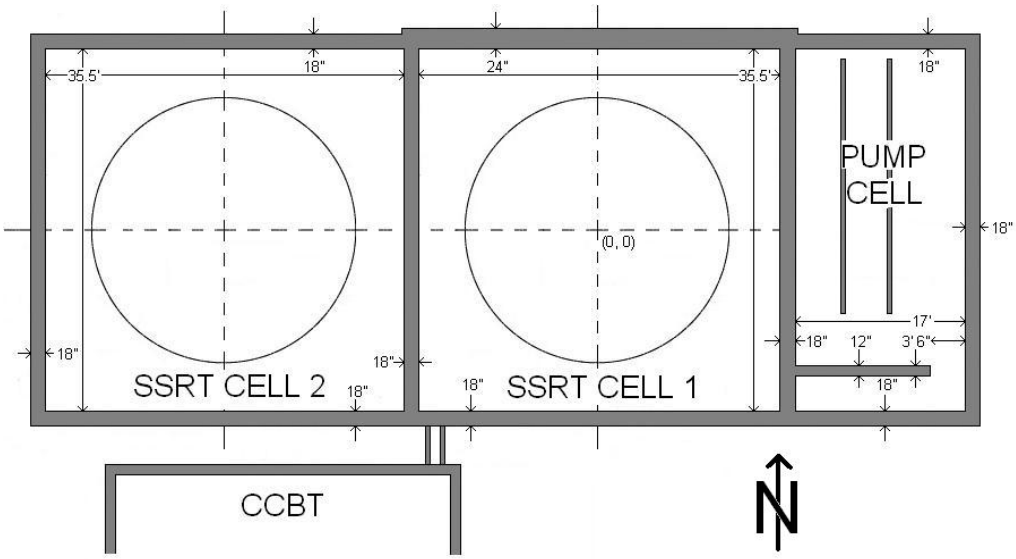

4.1.4 Pump Cell Details

A plan view of the Pump Cell is excerpted in Figure 4 [Ref. 3.7]. The Pump Cell has interior dimensions of 17' x 35.5' (518.16 cm x 1082.04 cm). The labyrinth wall inside the Pump Cell is 12" (30.48 cm) thick concrete.

Figure 4 – Pump Cell Details

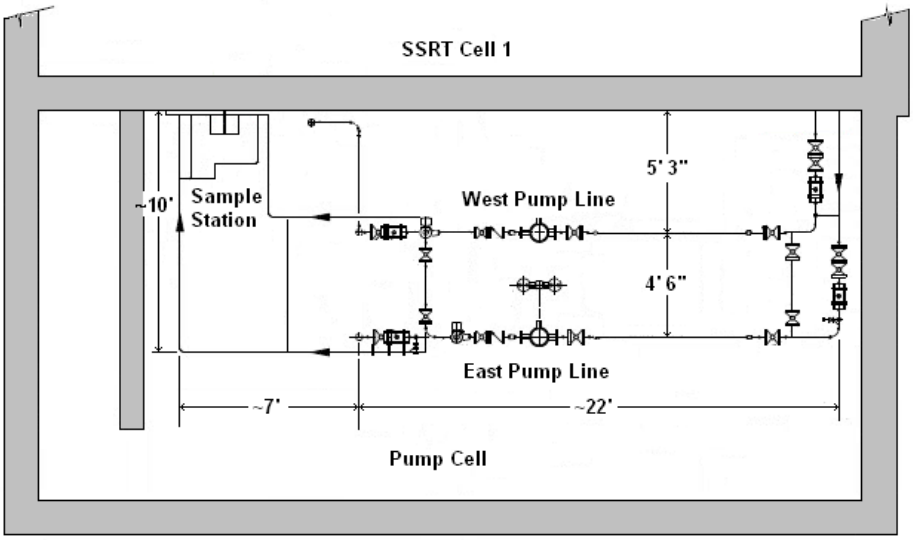

4.1.5 Jacketed Transfer Line Details

Section views of the four jacketed transfer lines between SSRT Cell 1 and the CCBT are excerpted in Figure 5 [Ref. 3.8]. Three of the four lines are 3" diam. lines; the fourth is 4" diam. line. All are inside 6" pipe jackets. All lines and jackets are Schedule 40 stainless steel and are centered in a 1'-6" x 2' (45.72 cm x 60.96 cm) stainless steel plate embedded midway through the SSRT enclosure wall. The distance between the SSRT and CCBT varies between 3'-9" (114.3 cm) between piers and 4' (121.92 cm) between the actual walls.

Figure 5 – Jacketed Transfer Line Details

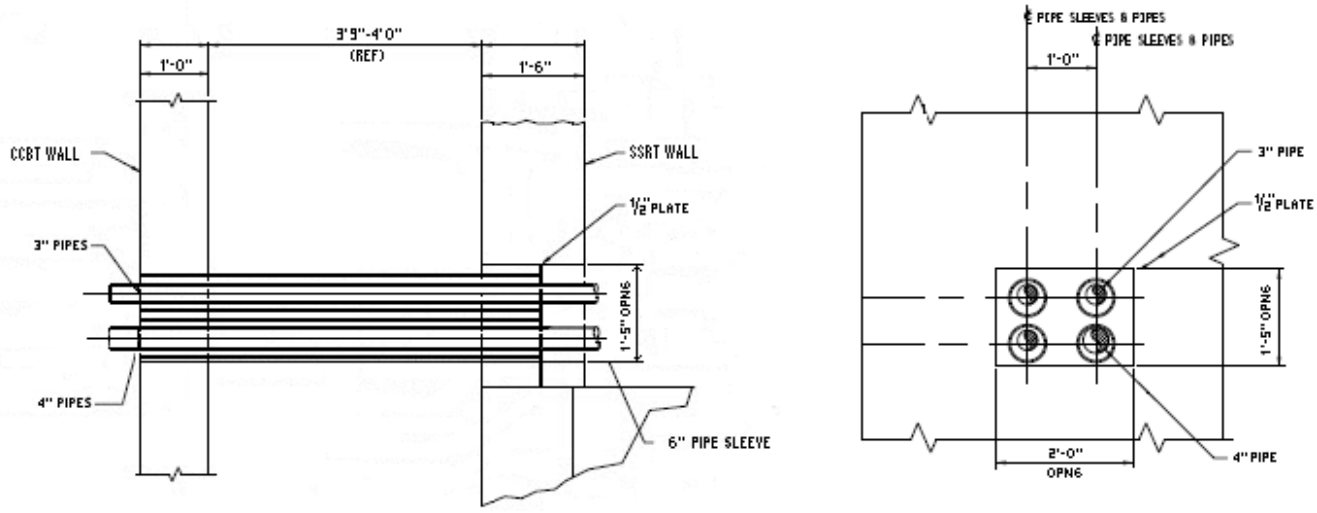

4.1.6 Penetration Details

Typical SSRT walkplate pipe/nozzle penetration details and schedules are excerpted in Figure 6 [Ref. 3.9]. Of primary concern is the potential for radiation streaming through the $^{1}/_{8}$" gap between the pipe and split plate ring.

Figure 6 – Penetration Details

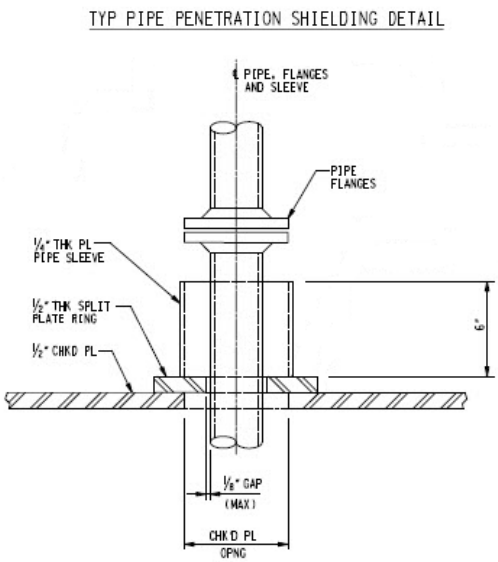

PIPE PENETRATION SCHEDULE

PENETRATION NUMBER	PIPE DIA	FLANGE DIA	OPN'G DIA	SLEEVE I.D.	SPLIT PLATE RING I.D. / O.D.
N5	6"	11"	12"	12"	6⅞"/16"
N8	3"	7½"	8½"	8½"	3¾"/12½"
N12	3"	7½"	8½"	8½"	3¾"/12½"
N14	6"	11"	12"	12"	6⅞"/16"
N16	3"	7½"	8½"	8½"	3¾"/12½"
N18	24"	32"	33"	33"	24¼"/37"

4.1.7 Transfer Line Pipe Schedule

Table 2 presents Schedule 40 stainless steel pipe dimensions for the various sizes of transfer lines in this calculation [Ref. 3.10].

Table 2 – Schedule 40 Pipe Dimensions

Pipe Diameter (in)	Inner Radius (cm)	Outer Radius (cm)	Wall Thickness (cm)
1"	1.33	1.67	0.34
2"	2.63	3.02	0.39
3"	3.90	4.45	0.55
4"	5.12	5.72	0.60
6"	7.70	8.41	0.71
24"	29.53	30.48	0.95

4.1.8 Material Compositions, Weight Fractions & Densities

Material compositions, weight fractions and densities used in the MCNP models were taken from Reference 3.11 and are presented in Table 3.

Table 3 – Material Compositions, Weight Fractions & Densities

Element	Material (weight fraction)			
	Water	Stainless Steel (SS304L)	Dry Air	Portland Concrete
^{1}H	0.111894			0.010000
^{6}C			0.000124	0.001000
^{7}N			0.755268	
^{8}O	0.888106		0.231781	0.529107
^{11}Na				0.016000
^{12}Mg				0.002000
^{13}Al				0.033872
^{14}Si				0.337021
^{15}P				
^{16}S				
^{18}Ar			0.012827	
^{19}K				0.013000
^{20}Ca				0.044000
^{22}Ti				
^{24}Cr		0.190000		
^{25}Mn		0.020000		
^{26}Fe		0.695000		0.014000
^{28}Ni		0.095000		
Total	1.00	1.00	1.00	1.00
Density (g/cc)	0.998207	8.00	0.001205	2.3

4.1.9 Flux-to-Dose Rate Conversion Factors

The MCNP radiation transport computer code uses energy-dependent flux-to-dose rate conversion factors from Reference 3.12 to convert photon (gamma) energy flux at various locations of interest (i.e., detectors, tallies) to dose rates. They are presented in Table 4.

Table 4 – ICRP 74 Gamma Flux-to-Dose Rate Conversion Factors

Energy (MeV)	Conversion Factor ($mrem \cdot hr^{-1}/cm^{-2} \cdot s^{-1}$)	Energy (MeV)	Conversion Factor ($mrem \cdot hr^{-1}/cm^{-2} \cdot s^{-1}$)	Energy (MeV)	Conversion Factor ($mrem \cdot hr^{-1}/cm^{-2} \cdot s^{-1}$)
1.00E-02	2.4624E-05	8.00E-02	2.1100E-04	6.00E-01	1.2535E-03
1.50E-02	3.0508E-04	1.00E-01	2.4253E-04	8.00E-01	1.5808E-03
2.00E-02	3.8053E-04	1.50E-01	3.4711E-04	1.00E+00	1.8779E-03
3.00E-02	2.9584E-04	2.00E-01	4.5977E-04	1.50E+00	2.5094E-03
4.00E-02	2.3494E-04	3.00E-01	6.8012E-04	3.00E+00	3.9770E-03
5.00E-02	2.0853E-04	4.00E-01	8.8452E-04	6.00E+00	6.3080E-03
6.00E-02	1.9889E-04	5.00E-01	1.0761E-03	1.00E+01	9.2791E-03

4.2 Assumptions

4.2.1 For all transfer line modeling, the lines are assumed to be full of liquid DSS. This is conservative as it bounds any other contents [e.g., process vessel vent (PVV) air] of lesser radioactive concentration [Ref. 3.4].

4.2.2 Ancillary SSRT equipment (e.g., pumps, sumps, etc.) and structural material (e.g., steel rebar inside concrete; structural steel under walkplate; concrete pads, piers and pedestals) are not included in MCNP models. This is conservative as it minimizes shielding in all radiation transport modeling [Ref. 3.6].

4.2.3 Actual SSRT enclosure cell floors are sloped and have trenches to promote drainage. Likewise, the SSRTs have sloped bottoms. For simplicity, all cell floors and tank bottoms are assumed to be flat and level. This is conservative in regards to tank volume as wall heights are averaged while source fill height is held constant. This approach also maintains a constant distance between the sources and detectors modeled above them [Ref. 3.6].

4.2.4 Anything specified as being made of steel in this calculation is assumed to be stainless steel 304L (SS304L) with a density of 8.00 g/cc. This simplifies all MCNP models and has negligible impact on radiation transport in comparison to other types of stainless steel and/or carbon steel due to their similar densities and photon shielding effectiveness [Refs. 3.11].

4.2.5 The density of the DSS source term is assumed to be that of water at 0.998207 g/cc [Ref. 3.11]. This simplifies all MCNP models and is conservative because the actual density of DSS ranges from 1.20 - 1.25 g/cc [Ref. 3.1].

4.2.6 Because MCNP requires all inputs to be in centimeters (cm), the following conversions apply to this calculation: 1” = 2.54 cm; 1’ = 30.48 cm; and 1 gal = 3785.412 cm^3. MCNP inputs have been rounded to at most two decimal places (i.e., 1/100th of a cm) for ease of input and to satisfy the 80-character code line length limit [Ref. 3.13].

5.0 ANALYTICAL METHODS AND COMPUTATIONS

5.1 Source Term Generation with ORIGEN-ARP Software [Ref. 3.14]

The ORIGEN-ARP code, a module of the well-established SCALE system of nuclear analysis codes, which was used by RE&HP for this calculation, has been verified and validated [Ref. 3.15]. All ORIGEN-ARP modeling was performed on laptop computer V0043116 leased to RE&HP. All files associated with this calculation are stored and maintained in RE&HP’s workgroup folder ('wg07\wg07data\lwo rad engr'). A list including the input and output files is presented in Appendix A. The ORIGEN-ARP input file (0002.inp) is presented in Appendix B.

Radionuclide concentrations (Ci/gal) from Input 4.1.1 were input into ORIGEN-ARP to generate source definition input for SSRT MCNP models. The normalized 18-group energy spectra for that source term showing each group’s contribution to total and corresponding source strength (9.11E+06 photons/sec/gal) is presented in Table 5. The source strength was maximized at a decay time of 0.1 year.

Table 5 – Source Energy Grouping and Distribution

Group	Energy (MeV)		Photons	Normalized	Group	Energy (MeV)		Photons	Normalized
	Min	Max	/sec/gal	Spectrum		Min	Max	/sec/gal	Spectrum
1	0.01	0.05	1.390E+06	1.526E-01	10	1.33	1.66	7.714E+04	8.468E-03
2	0.05	0.10	1.155E+04	1.268E-03	11	1.66	2.00	1.111E+01	1.220E-06
3	0.10	0.20	1.910E+05	2.097E-02	12	2.00	2.50	1.596E+00	1.752E-07
4	0.20	0.30	2.464E+04	2.705E-03	13	2.50	3.00	1.363E-03	1.496E-10
5	0.30	0.40	2.583E+04	2.835E-03	14	3.00	4.00	0.000E+00	0.000E+00
6	0.40	0.60	6.061E+05	6.653E-02	15	4.00	5.00	0.000E+00	0.000E+00
7	0.60	0.80	6.327E+06	6.945E-01	16	5.00	6.50	0.000E+00	0.000E+00
8	0.80	1.00	8.721E+04	9.573E-03	17	6.50	8.00	0.000E+00	0.000E+00
9	1.00	1.33	3.691E+05	4.052E-02	18	8.00	10.00	0.000E+00	0.000E+00
							Total	**9.110E+06**	1.000E+00

5.2 Radiation Transport Modeling with MCNP Software [Ref. 3.2]

The MCNP radiation transport code used by RE&HP for this calculation has been verified and validated [Ref. 3.16]. All MCNP modeling was performed on one of two laptop computers leased to RE&HP: V0043116 or V0044195. All files associated with this calculation are stored and maintained in RE&HP's workgroup folder ('wg07\wg07data\lwo rad engr'). A list of all MCNP input and output files is presented in Appendix A.

The source energy distribution spectrum and source strength from Section 5.1 were input into simplified, geometric MCNP models representing the SSRTs and associated pumps, enclosure, jacketed transfer lines, unshielded transfer lines and various penetrations through the enclosure walkplate. Different conventions used in the various MCNP models are discussed in the following subsections.

5.2.1 SSRTs & Enclosure

The SSRTs and its concrete enclosure were relatively simple to model consisting of a series of concentric and layered right circular cylinders (RCCs) inside concentric and layered rectangular parallelepipeds (RPPs) (see Figure 7). The source inside the SSRTs was modeled as 100 cm outer layer divided into upper and lower sections corresponding to the upper and lower rings of the SSRT. Both surround a void inner core. This limits self-absorption by inner core because 100 cm represents 10+ half-value layers and provides >99.9% attenuation. This approach makes the model run more efficiently as photons are only tracked in outer source layer. The concrete slab and soil underneath are modeled as voids because downward photon transport is negligible and not a concern above and at a distance from the enclosure.

Figure 7 – MCNP Representation of SSRTs & Enclosure

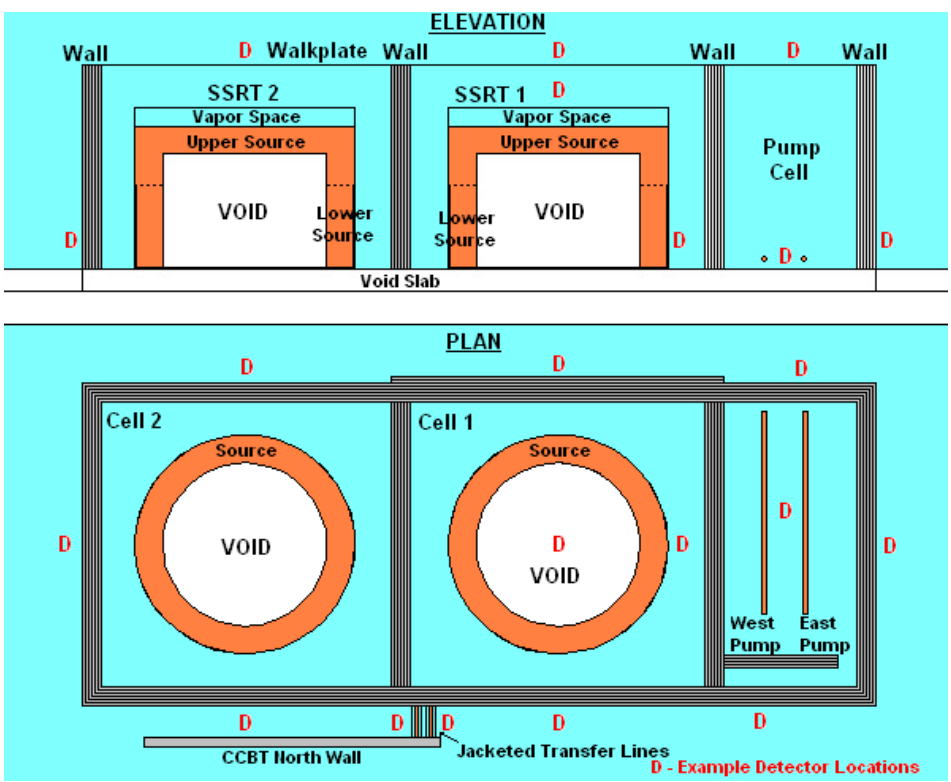

The two pump lines and associated sample station piping in the Pump Cell are comprised of ~50' of steel piping in diameters of 1", 2" and 3" (refer to Figure 4). Rather than attempt to model all lines as positioned, including multiple lines, sizes, bends, intersections and elevation changes, for simplicity and ease of modeling they were divided into two 4" diameter cylinders each 25' in length. This is also conservative as it overestimates the volume of the source material contained in the lines.

The only variance reduction technique included in the SSRT model was geometry splitting with Russian roulette. In order to reduce MCNP run times and make the models run more efficiently, the 12", 18" and 24" walls were conveniently segmented into multiple 3" layers [i.e., slightly more than 2 mean free path (MFP) lengths for Cs-137 gammas]. Importances of increasing value were assigned to each layer as they moved away from the void core based on professional judgment and iterative modeling.

Volume detectors (F4 tallies) were placed inside the enclosure, above the enclosure, and at distances from contact extending out to 500' away from the enclosure to evaluate radiation zoning criteria.

An example MCNP SSRT enclosure input file is presented in Appendix C.

5.2.2 Jacketed Transfer Lines Between SSRT & CCBT Enclosure

As mentioned previously in Section 4.1.5, the distance between the SSRT and CCBT varies between 3' 9" (114.3 cm) between piers and 4' (121.92 cm) between the actual walls. In the SSRT model the 3' 9" (114.3 cm) was used for conservatism. Including the halfway through the SSRT south wall flush to the steel embed plate and completely through the CCBT north wall made the total length of the transfer lines modeled as 166.4 cm. A void was modeled south of the CCBT wall because photons tracked through this thick shield into the CCBT enclosure are of no concern (see Figure 8).

Figure 8 – MCNP Representation of Jacketed Transfer Lines

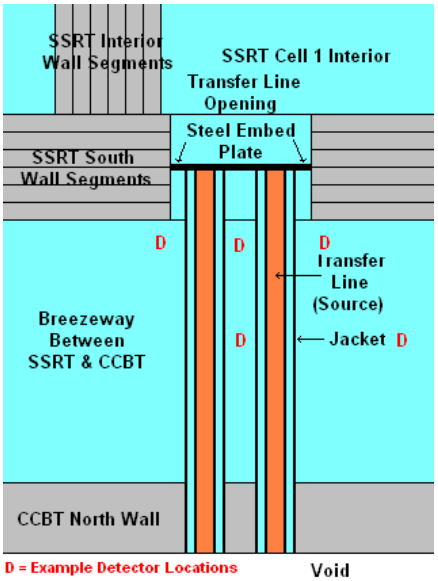

Point detectors (F5 tallies) were placed in between the transfer lines as well as at distances from contact extending out to 10' away to evaluate radiation zoning criteria and the need for radiological posting.

5.2.3 SSRT Enclosure Walkplate Penetrations

Several walkplate penetrations were considered including typical tank nozzles, piping penetrations as well as open ports and accesses through the walkplate (see Figure 7). Rather than model each as configured in design drawings, MCNP models were developed for each penetration centered directly above an SSRT. This is conservative as it maximizes exposure to the DSS tank source below. A simplified representation of the SSRT enclosure and source was also employed to evaluate walkplate penetrations. Only the upper 100 cm of a single SSRT source was considered without any enclosure walls since only upward photon transport is a concern for dose rates through penetrations in the SSRT walkplate.

Figure 9 – MCNP Representations of Typical SSRT Walkplate Penetrations

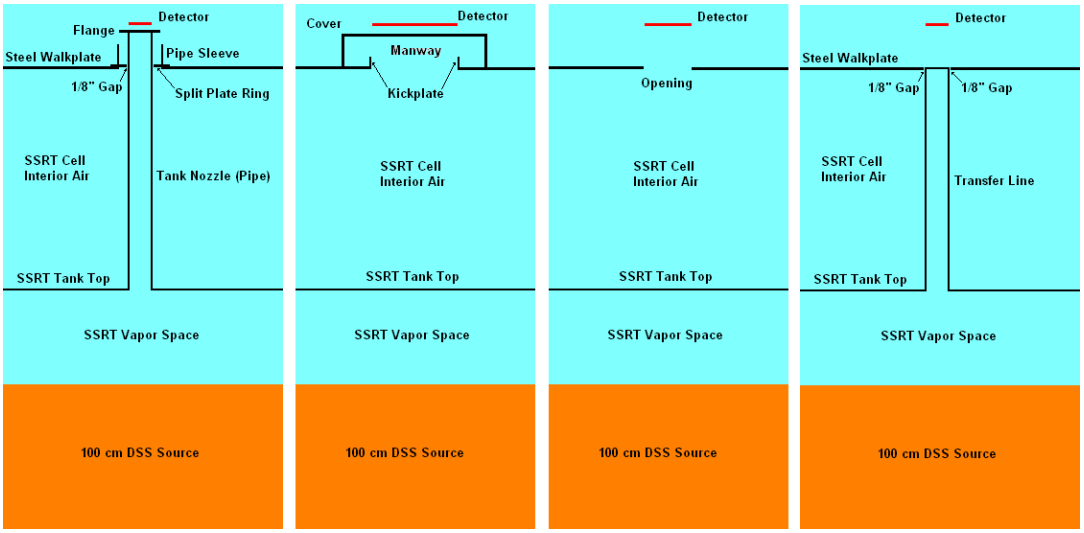

As an additional variance reduction technique, DXTRAN spheres were incorporated into several walkplate penetration models. Doing so deterministically increased the probability of photon interaction in the small detector centered over the penetration above the large DSS source without biasing results.

Volume detectors (F4 tallies) placed above each penetration and directly inside the 1/8" air gap to evaluate radiation zoning criteria and radiation streaming potential.

An example MCNP penetration input file is presented in Appendix D.

5.2.4 Generic Transfer Lines

Unshielded 1", 2", 3" and 4" transfer lines traverse the inside and on top of the SSRT and/or CCBT enclosures. Rather than attempt to model all lines as positioned, including multiple lines, sizes, 90° bends, intersections and elevation changes, simple MCNP models were developed for generic, straight-line configurations of each diameter line with lengths ranging from 1' to 20'. Dose rate results from these individual models can be summed to conservatively estimate dose rates at locations involving miscellaneous configurations (e.g., multiple lines, sizes, 90° bends, intersections and elevation changes) where dose rates could be higher than from an individual, straight line.

Ring detectors (F5x tallies) were positioned at the midpoint of each line length at radial distances of 5 cm, 30 cm, and 2'-20' in 1' increments. No variance reduction techniques were applied to these models.

An example MCNP transfer line input file is presented in Appendix E.

5.2.5 Source Volumes and Detector ("Tally") Multipliers

In addition to flux-to-dose rate conversion factors from Section 4.1.9, multipliers for each source term based on respective source volumes and source strengths are necessary to convert the tallies to mrem/hr. See Appendix F for computations.

5.3 Data Manipulation & Processing with Microsoft Excel and Word

Microsoft Excel was used to compile, manipulate and tabulate dimensional data and results associated with this calculation. Microsoft Word was used to publish this calculation report. Both were performed on laptop computer V0043116 leased to RE&HP. All files associated with this calculation are stored and maintained in the RE&HP workgroup folder ('wg07\wg07data\lwo rad engr').

6.0 RESULTS

Dose rates inside, on top of and around the SSRT enclosure are presented in Appendix G. Dose rates above various penetrations through the SSRT enclosure walkplate are presented in Appendix H. Dose rates from various diameter steel transfer lines associated with the SSRT project are presented in Appendices I, J, K and L.

While MCNP output files provide results to the microrem level in scientific notation to four decimal places, for ease of presentation and comparison to radiation zoning criteria, as well as for user friendliness in the field, all dose rates are presented as follows:

- Dose rates $\geq$ 10 mrem/hr are presented to zero decimal places (e.g. 10, 18, 52 mrem/hr);
- Dose rates between 0.1 – 10 mrem/hr are presented to one decimal place (e.g., 5.7, 9.8 mrem/hr);
- Dose rates between 0.01 – 0.1 mrem/hr are presented to two decimal places (e.g., 0.07 mrem/hr); and
- Dose rates $\leq$ 0.01 are presented as $\leq$ 0.01.

Due to adequate computer run times and successful variance reduction techniques incorporated into MCNP models, >99% of the results passed the ten built-in MCNP statistical checks. For the <1% that didn't pass one of the statistical checks, the results are still considered reliable either because their contribution is negligible and/or they fit well with surrounding results. For models employing point and ring detectors, all relative errors were $\leq \pm$5% at which MCNP considers results reliable [Ref. 3.5]. Likewise, for models employing volume detectors, all relative errors were $\leq \pm$10% at which MCNP considers results reliable [Ref. 3.5]. Therefore, results in appendices are presented without associated relative errors. All relative errors are available in the corresponding MCNP output files maintained on RE&HP workgroup folder ('wg07\wg07data\lwo rad engr').

7.0 CONCLUSIONS

The project's bulk shielding as designed is effective at maintaining dose rates inside, around and on top of the SSRT enclosure in accordance with radiation zoning criteria. Dose rates inside and on top of the enclosure are between 5-100 mrem/hr (Radiation Area; Rad Zone 4). Dose rates around the enclosure inside the fence are between 0.05-5.0 mrem/hr (Radiological Buffer Area; Rad Zones 2 & 3). Dose rates outside the fence are <0.05 mrem/hr (Controlled Area; Rad Zone 1). Penetrations through the SSRT enclosure walkplate do not significantly change dose rates above the walkplate thereby maintaining its Radiation Area status [i.e., do not result in the generation of a High Radiation Area (HRA)]. Transfer line dose rates are all <5.0 mrem/hr @ 30 cm which meets radiation zoning criteria. No additional shielding is required.

An external dose assessment will be performed to ensure annual personnel doses associated with operating and maintaining the new SSRTs will meet the radiological design basis total effective dose limit of 1,000 mrem/person/year [Ref. 3.3].

8.0 APPENDICES

Appendix A – List of ORIGEN-ARP and MCNP Input/Output Files
Appendix B – ORIGEN-ARP Input File (0002.inp)
Appendix C – Example SSRT Enclosure MCNP Input File (SSRT)
Appendix D – Example Penetration MCNP Input File (N514)
Appendix E – Example Transfer Line MCNP Input File (4LINE20)
Appendix F – Source Volumes and Tally Multiplier Computations
Appendix G – Dose Rate Profile (mrem/hr) for SSRT Enclosure
Appendix H – Dose Rates (mrem/hr) Through SSRT Enclosure Walkplate Penetrations
Appendix I – Dose Rates (mrem/hr) from Unshielded 1" Diameter Transfer Lines (Schedule 40 Steel)
Appendix J – Dose Rates (mrem/hr) from Unshielded 2" Diameter Transfer Lines (Schedule 40 Steel)
Appendix K – Dose Rates (mrem/hr) from Unshielded 3" Diameter Transfer Lines (Schedule 40 Steel)
Appendix L – Dose Rates (mrem/hr) from Unshielded 4" Diameter Transfer Lines (Schedule 40 Steel)

Appendix A – List of ORIGEN-ARP and MCNP Input/Output Files

File Name	*File Type*	*File Description*
ORIGEN-ARP		
0002.inp	Input	Saltstone Facility Design Basis Source Term for DSS with a Cs-137 concentration of 0.0002 Ci/gal
0002.out	Output	
MCNP		
SSRT	Input	2 Full SSRTs Inside Concrete Enclosure with steel walkplate roof; includes 2 pumps in pump cell and 4 transfer lines to CCBT
SSRTo	Output	
3OPEN	Input	3” diam. unshielded opening in steel walkplate above a single full SSRT
3OPENo	Output	
4OPEN	Input	4” diam. unshielded opening in steel walkplate above a single full SSRT
4OPENo	Output	
6OPEN	Input	6” diam. unshielded opening in steel walkplate above a single full SSRT
6OPENo	Output	
12OPEN	Input	12” diam. unshielded opening in steel walkplate above a single full SSRT
12OPENo	Output	
18OPEN	Input	18” diam. unshielded opening in steel walkplate above a single full SSRT
18OPENo	Output	
24OPEN	Input	24” diam. unshielded opening in steel walkplate above a single full SSRT
24OPENo	Output	
36OPEN	Input	36” diam. unshielded opening in steel walkplate above a single full SSRT
36OPENo	Output	
L1	Input	Open, unshielded Ladder 1 opening in steel walkplate above a single full SSRT
L1o	Output	
L2L3	Input	Open, unshielded Ladder 2 or 3 opening in steel walkplate above a single full SSRT
L2L3o	Output	
L5	Input	Open, unshielded Ladder 5 opening in steel walkplate above a single full SSRT
L5o	Output	
MANWAY	Input	Manway opening in steel walkplate above a single full SSRT (includes shield box cover)
MANWAYo	Output	
N18	Input	24” Nozzle 18 (Agitator) opening in steel walkplate above a single full SSRT
N18o	Output	
N514	Input	6” Nozzles’ 5 or 14 opening(s) in steel walkplate above a single full SSRT
N514o	Output	
N81216	Input	3” Nozzles’ 8, 12 or 16 opening(s) in steel walkplate above a single full SSRT
N81216o	Output	
P3IN	Input	3” Schedule 40 Transfer Line Penetration in steel walkplate above a single full SSRT
P3INo	Output	
P4IN	Input	4” Schedule 40 Transfer Line Penetration in steel walkplate above a single full SSRT
P4INo	Output	
SPACC	Input	Open, unshielded Sump Pump Access cover in steel walkplate above a single full SSRT
SPACCo	Output	
1LINE1	Input	1’ @ 1” Schedule 40 Transfer Line
1LINE1o	Output	
1LINE2	Input	2’ @ 1” Schedule 40 Transfer Line
1LINE2o	Output	
1LINE3	Input	3’ @ 1” Schedule 40 Transfer Line
1LINE3o	Output	
1LINE4	Input	4’ @ 1” Schedule 40 Transfer Line
1LINE4o	Output	
1LINE5	Input	5’ @ 1” Schedule 40 Transfer Line
1LINE5o	Output	
1LINE6	Input	6’ @ 1” Schedule 40 Transfer Line
1LINE6o	Output	
1LINE7	Input	7’ @ 1” Schedule 40 Transfer Line
1LINE7o	Output	

Appendix A – List of ORIGEN-ARP and MCNP Input/Output Files (cont.)

File Name	*File Type*	*File Description*
1LINE8	Input	8’ @ 1” Schedule 40 Transfer Line
1LINE8o	Output	
1LINE9	Input	9’ @ 1” Schedule 40 Transfer Line
1LINE9o	Output	
1LINE10	Input	10’ @ 1” Schedule 40 Transfer Line
1LINE10o	Output	
1LINE11	Input	11’ @ 1” Schedule 40 Transfer Line
1LINE11o	Output	
1LINE12	Input	12’ @ 1” Schedule 40 Transfer Line
1LINE12o	Output	
1LINE13	Input	13’ @ 1” Schedule 40 Transfer Line
1LINE13o	Output	
1LINE14	Input	14’ @ 1” Schedule 40 Transfer Line
1LINE14o	Output	
1LINE15	Input	15’ @ 1” Schedule 40 Transfer Line
1LINE15o	Output	
1LINE16	Input	16’ @ 1” Schedule 40 Transfer Line
1LINE16o	Output	
1LINE17	Input	17’ @ 1” Schedule 40 Transfer Line
1LINE17o	Output	
1LINE18	Input	18’ @ 1” Schedule 40 Transfer Line
1LINE18o	Output	
1LINE19	Input	19’ @ 1” Schedule 40 Transfer Line
1LINE19o	Output	
1LINE20	Input	20’ @ 1” Schedule 40 Transfer Line
1LINE20o	Output	
2LINE1	Input	1’ @ 2” Schedule 40 Transfer Line
2LINE1o	Output	
2LINE2	Input	2’ @ 2” Schedule 40 Transfer Line
2LINE2o	Output	
2LINE3	Input	3’ @ 2” Schedule 40 Transfer Line
2LINE3o	Output	
2LINE4	Input	4’ @ 2” Schedule 40 Transfer Line
2LINE4o	Output	
2LINE5	Input	5’ @ 2” Schedule 40 Transfer Line
2LINE5o	Output	
2LINE6	Input	6’ @ 2” Schedule 40 Transfer Line
2LINE6o	Output	
2LINE7	Input	7’ @ 2” Schedule 40 Transfer Line
2LINE7o	Output	
2LINE8	Input	8’ @ 2” Schedule 40 Transfer Line
2LINE8o	Output	
2LINE9	Input	9’ @ 2” Schedule 40 Transfer Line
2LINE9o	Output	
2LINE10	Input	10’ @ 2” Schedule 40 Transfer Line
2LINE10o	Output	
2LINE11	Input	11’ @ 2” Schedule 40 Transfer Line
2LINE11o	Output	
2LINE12	Input	12’ @ 2” Schedule 40 Transfer Line
2LINE12o	Output	
2LINE13	Input	13’ @ 2” Schedule 40 Transfer Line
2LINE13o	Output	
2LINE14	Input	14’ @ 2” Schedule 40 Transfer Line
2LINE14o	Output	

Appendix A – List of ORIGEN-ARP and MCNP Input/Output Files (cont.)

File Name	*File Type*	*File Description*
2LINE15	Input	15’ @ 2” Schedule 40 Transfer Line
2LINE15o	Output	
2LINE16	Input	16’ @ 2” Schedule 40 Transfer Line
2LINE16o	Output	
2LINE17	Input	17’ @ 2” Schedule 40 Transfer Line
2LINE17o	Output	
2LINE18	Input	18’ @ 2” Schedule 40 Transfer Line
2LINE18o	Output	
2LINE19	Input	19’ @ 2” Schedule 40 Transfer Line
2LINE19o	Output	
2LINE20	Input	20’ @ 2” Schedule 40 Transfer Line
2LINE20o	Output	
3LINE1	Input	1’ @ 3” Schedule 40 Transfer Line
3LINE1o	Output	
3LINE2	Input	2’ @ 3” Schedule 40 Transfer Line
3LINE2o	Output	
3LINE3	Input	3’ @ 3” Schedule 40 Transfer Line
3LINE3o	Output	
3LINE4	Input	4’ @ 3” Schedule 40 Transfer Line
3LINE4o	Output	
3LINE5	Input	5’ @ 3” Schedule 40 Transfer Line
3LINE5o	Output	
3LINE6	Input	6’ @ 3” Schedule 40 Transfer Line
3LINE6o	Output	
3LINE7	Input	7’ @ 3” Schedule 40 Transfer Line
3LINE7o	Output	
3LINE8	Input	8’ @ 3” Schedule 40 Transfer Line
3LINE8o	Output	
3LINE9	Input	9’ @ 3” Schedule 40 Transfer Line
3LINE9o	Output	
3LINE10	Input	10’ @ 3” Schedule 40 Transfer Line
3LINE10o	Output	
3LINE11	Input	11’ @ 3” Schedule 40 Transfer Line
3LINE11o	Output	
3LINE12	Input	12’ @ 3” Schedule 40 Transfer Line
3LINE12o	Output	
3LINE13	Input	13’ @ 3” Schedule 40 Transfer Line
3LINE13o	Output	
3LINE14	Input	14’ @ 3” Schedule 40 Transfer Line
3LINE14o	Output	
3LINE15	Input	15’ @ 3” Schedule 40 Transfer Line
3LINE15o	Output	
3LINE16	Input	16’ @ 3” Schedule 40 Transfer Line
3LINE16o	Output	
3LINE17	Input	17’ @ 3” Schedule 40 Transfer Line
3LINE17o	Output	
3LINE18	Input	18’ @ 3” Schedule 40 Transfer Line
3LINE18o	Output	
3LINE19	Input	19’ @ 3” Schedule 40 Transfer Line
3LINE19o	Output	
3LINE20	Input	20’ @ 3” Schedule 40 Transfer Line
3LINE20o	Output	
4LINE1	Input	1’ @ 4” Schedule 40 Transfer Line
4LINE1o	Output	

Appendix A – List of ORIGEN-ARP and MCNP Input/Output Files (cont.)

File Name	*File Type*	*File Description*
4LINE2	Input	2’ @ 4” Schedule 40 Transfer Line
4LINE2o	Output	
4LINE3	Input	3’ @ 4” Schedule 40 Transfer Line
4LINE3o	Output	
4LINE4	Input	4’ @ 4” Schedule 40 Transfer Line
4LINE4o	Output	
4LINE5	Input	5’ @ 4” Schedule 40 Transfer Line
4LINE5o	Output	
4LINE6	Input	6’ @ 4” Schedule 40 Transfer Line
4LINE6o	Output	
4LINE7	Input	7’ @ 4” Schedule 40 Transfer Line
4LINE7o	Output	
4LINE8	Input	8’ @ 4” Schedule 40 Transfer Line
4LINE8o	Output	
4LINE9	Input	9’ @ 4” Schedule 40 Transfer Line
4LINE9o	Output	
4LINE10	Input	10’ @ 4” Schedule 40 Transfer Line
4LINE10o	Output	
4LINE11	Input	11’ @ 4” Schedule 40 Transfer Line
4LINE11o	Output	
4LINE12	Input	12’ @ 4” Schedule 40 Transfer Line
4LINE12o	Output	
4LINE13	Input	13’ @ 4” Schedule 40 Transfer Line
4LINE13o	Output	
4LINE14	Input	14’ @ 4” Schedule 40 Transfer Line
4LINE14o	Output	
4LINE15	Input	15’ @ 4” Schedule 40 Transfer Line
4LINE15o	Output	
4LINE16	Input	16’ @ 4” Schedule 40 Transfer Line
4LINE16o	Output	
4LINE17	Input	17’ @ 4” Schedule 40 Transfer Line
4LINE17o	Output	
4LINE18	Input	18’ @ 4” Schedule 40 Transfer Line
4LINE18o	Output	
4LINE19	Input	19’ @ 4” Schedule 40 Transfer Line
4LINE19o	Output	
4LINE20	Input	20’ @ 4” Schedule 40 Transfer Line
4LINE20o	Output	

Appendix B – ORIGEN-ARP Input File (0002.inp)

```
'This SCALE input file was generated by
'OrigenArp Version  5.1.01 March 22, 2007
#origens
0$$ a11 71 e t
Decay Case
3$$ 21 1 1 0 a16 4 a33 18 e t
35$$ 0 t
54$$ a8 1 a11 0  e
56$$ a2 7 a6 1 a10 0 a13 5 a14 5 a15 3 a17 2 e
57** 0 a3 1e-05 e
95$$ 0 t
0.0002 Ci/gal Saltstone DSS
0 MTU
60** 0.001 0.003 0.01 0.03 0.1 0.3 1
61** f0.05
65$$
'Gram-Atoms   Grams   Curies   Watts-All   Watts-Gamma
 3z   1   0   0   3z   3z   3z   6z
 3z   1   0   0   3z   3z   3z   6z
 3z   1   0   0   3z   3z   3z   6z
81$$ 2 0 24 1 e
82$$ 2 2 2 2 2 2 2 e
83**
 1.0000000e+07 8.0000000e+06 6.5000000e+06 5.0000000e+06 4.0000000e+06
 3.0000000e+06 2.5000000e+06 2.0000000e+06 1.6600000e+06 1.3300000e+06
 1.0000000e+06 8.0000000e+05 6.0000000e+05 4.0000000e+05 3.0000000e+05
 2.0000000e+05 1.0000000e+05 5.0000000e+04 1.0000000e+04 e
73$$ 270600 511250 551340 551370 631540
74** 4.1e-06 3.36e-05 9.2e-07 0.0002 6.79e-06
75$$ 1 3 3 3 3
t
56$$ 0 0 a10  1 e t
56$$ 0 0 a10  2 e t
56$$ 0 0 a10  3 e t
56$$ 0 0 a10  4 e t
56$$ 0 0 a10  5 e t
56$$ 0 0 a10  6 e t
56$$ 0 0 a10  7 e t
56$$ f0 t
end
#shell
copy ft71f001 "Q:\Broome\Saltstone\SSRTs\SSRT Calc (N-CLC-Z-00021)\SSRT MCNP
Models\Confirmed Calc Model w Xfer Lines\0002.f71"
del ft71f001
end
```

Appendix C – Example SSRT Enclosure MCNP Input File (SSRT)

```
2 SSRTs FULL OF 0.0002 CI/GAL DSS
c
c     CELL CARDS
c
c     SSRT CELL 1 (C1)-------------------------------------------------------
1     0              -1                    imp:p=0    $Core1 (Void)
2     1  -0.998207  (1 -2):(1 -3)          imp:p=1    $SSRT1 Source (H2O)
3     2  -0.001205  -4                     imp:p=8    $SSRT1 Head Space (Air)
4     3  -8.00       2 3 4 -5              imp:p=8    $SSRT1 Wall (SS)
5     2  -0.001205   5 -6 951 952          imp:p=14   $Cell1 Interior (Air)
c     SSRT CELL 2 (C2)-------------------------------------------------------
6     0             -101                      imp:p=0    $Core2 (Void)
7     1  -0.998207   (101 -102):(101 -103)   imp:p=1    $SSRT2 Source (H2O)
8     2  -0.001205  -104                      imp:p=8    $SSRT2 Head Space (Air)
9     3  -8.00       102 103 104 -105        imp:p=8    $SSRT2 Wall (SS)
10    2  -0.001205   105 -106                imp:p=14   $Cell2 Interior (Air)
c     PUMP CELL (PC)---------------------------------------------------------
11    2  -0.001205   702 704 709 -711 953    imp:p=3    $Pump Cell Interior (Air)
12    1  -0.998207  -701                     imp:p=1    $West Pump Source (H2O)
13    3  -8.00       701 -702                imp:p=1    $West Pump Housing (SS)
14    1  -0.998207  -703                     imp:p=1    $East Pump Source (H2O)
15    3  -8.00       703 -704                imp:p=1    $East Pump Housing (SS)
16    4  -2.3       -705                     imp:p=1    $Inner Wall Segment 1 (Concrete)
17    4  -2.3       -706                     imp:p=1    $Inner Wall Segment 2 (Concrete)
18    4  -2.3       -707                     imp:p=1    $Inner Wall Segment 3 (Concrete)
19    4  -2.3       -708                     imp:p=1    $Inner Wall Segment 4 (Concrete)
20    2  -0.001205  -710                     imp:p=24   $South Wall Entry (Air)
c     SSRT ENCLOSURE (Concrete)----------------------------------------------
21    4  -2.3        301 -302 710 804        imp:p=36       $Outer Wall Segment 1
22    4  -2.3        302 -303 710 804        imp:p=102      $Outer Wall Segment 2
23    4  -2.3        303 -304 710 804        imp:p=324      $Outer Wall Segment 3
24    4  -2.3        304 -305 710 804        imp:p=1060     $Outer Wall Segment 4
25    4  -2.3        305 -306 710 804        imp:p=3512     $Outer Wall Segment 5
26    4  -2.3        306 -307 710 804        imp:p=9635     $Outer Wall Segment 6
27    4  -2.3       -308                     imp:p=45393    $Bumpout Segment 1
28    4  -2.3       -309                     imp:p=45393    $Bumpout Segment 2
29    4  -2.3       -401                     imp:p=1    $C1/C2 Inner Wall Segment 1
30    4  -2.3       -402                     imp:p=1    $C1/C2 Inner Wall Segment 2
31    4  -2.3       -403                     imp:p=1    $C1/C2 Inner Wall Segment 3
32    4  -2.3       -404                     imp:p=1    $C1/C2 Inner Wall Segment 4
33    4  -2.3       -405                     imp:p=1    $C1/C2 Inner Wall Segment 5
34    4  -2.3       -406                     imp:p=1    $C1/C2 Inner Wall Segment 6
35    4  -2.3       -501                     imp:p=1    $C1/PC Inner Wall Segment 1
36    4  -2.3       -502                     imp:p=1    $C1/PC Inner Wall Segment 2
37    4  -2.3       -503                     imp:p=1    $C1/PC Inner Wall Segment 3
38    4  -2.3       -504                     imp:p=1    $C1/PC Inner Wall Segment 4
39    4  -2.3       -505                     imp:p=1    $C1/PC Inner Wall Segment 5
40    4  -2.3       -506                     imp:p=1    $C1/PC Inner Wall Segment 6
c     EXTERIOR ---------------------------------------------------------------
41    3  -8.00      -201:-202                imp:p=54      $Walkplate (SS)
42    0             -601:-602:-603           imp:p=0       $Slab (Concrete)
43    0              601 602 603 -801 802 -803
                                             imp:p=0       $Soil
44    2  -0.001205   201 202 307 308 309 801 -803 809 813 817 821 822 823
                     901 48I 950             imp:p=113     $Atmosphere
45    0            (-802 -803):803           imp:p=0       $Universe
c     TRANSFER LINES---------------------------------------------------------
46    2  -0.001205  -804 805 809 813 817 821 imp:p=14   $Wall Opening (Air)
47    3  -8.00      -805 809 813 817 821     imp:p=112  $Plate (SS)
48    1  -0.998207  -806                     imp:p=1    $Upper Lt Source (H2O)
49    3  -8.00       806 -807                imp:p=1    $Upper Lt Inner 3" Line (SS)
50    2  -0.001205   807 -808                imp:p=1    $Upper Lt Annulus (Air)
51    3  -8.00       808 -809                imp:p=1    $Upper Lt 6" Jacket (SS)
52    1  -0.998207  -810                     imp:p=1    $Upper Rt Source (H2O)
53    3  -8.00       810 -811                imp:p=1    $Upper Rt Inner 3" Line (SS)
54    2  -0.001205   811 -812                imp:p=1    $Upper Rt Annulus (Air)
55    3  -8.00       812 -813                imp:p=1    $Upper Lt 6" Jacket (SS)
56    1  -0.998207  -814                     imp:p=1    $Lower Lt Source (H2O)
```

Appendix C – Example SSRT Enclosure MCNP Input File (SSRT) (cont.)

```
57    3  -8.00       814 -815                imp:p=1    $Lower Lt Inner 3" Line (SS)
58    2  -0.001205   815 -816                imp:p=1    $Lower Lt Annulus (Air)
59    3  -8.00       816 -817                imp:p=1    $Lower Lt 6" Jacket (SS)
60    1  -0.998207  -818                      imp:p=1    $Lower Rt Source (H2O)
61    3  -8.00       818 -819                imp:p=1    $Lower Rt Inner 4" Line (SS)
62    2  -0.001205   819 -820                imp:p=1    $Lower Rt Annulus (Air)
63    3  -8.00       820 -821                imp:p=1    $Lower Rt 6" Jacket (SS)
c     CCBT ENCLOSURE-----------------------------------------------------------
64    4  -2.3       -822 809 813 817 821     imp:p=1    $North Wall (Concrete)
65    0            -823                      imp:p=0    $Kill Zone South of N Wall (Void)
c     DETECTORS ABOVE ENCLOSURE------------------------------------------------
901   2  -0.001205  -901                imp:p=113     $30 cm above Cell 1
902   2  -0.001205  -902                imp:p=113     $30 cm above Cell 2
903   2  -0.001205  -903                imp:p=113     $30 cm above Pump Cell
c     DETECTORS NORTH OF ENCLOSURE---------------------------------------------
904   2  -0.001205  -904                imp:p=113     $30 cm Cell 2
905   2  -0.001205  -905                imp:p=113     $40' Fenceline
906   2  -0.001205  -906                imp:p=113     $30 cm Cell 1
907   2  -0.001205  -907                imp:p=113     $40' Fenceline
908   2  -0.001205  -908                imp:p=113     $30 cm Pump Cell
909   2  -0.001205  -909                imp:p=113     $40' Fenceline
910   2  -0.001205  -910                imp:p=113     $100' North
911   2  -0.001205  -911                imp:p=113     $150' North
912   2  -0.001205  -912                imp:p=113     $200' North
913   2  -0.001205  -913                imp:p=113     $250' North
914   2  -0.001205  -914                imp:p=113     $300' North
915   2  -0.001205  -915                imp:p=113     $350' North
916   2  -0.001205  -916                imp:p=113     $400' North
917   2  -0.001205  -917                imp:p=113     $450' North
918   2  -0.001205  -918                imp:p=113     $500' North
c     DETECTORS EAST OF ENCLOSURE----------------------------------------------
919   2  -0.001205  -919                imp:p=113     $30 cm East of Pump Cell
920   2  -0.001205  -920                imp:p=113     $10' East of Pump Cell
921   2  -0.001205  -921                imp:p=113     $20' East of Pump Cell
922   2  -0.001205  -922                imp:p=113     $30' East of Pump Cell
923   2  -0.001205  -923                imp:p=113     $40' East of Pump Cell
924   2  -0.001205  -924                imp:p=113     $50' East of Pump Cell
925   2  -0.001205  -925                imp:p=113     $100' East of Pump Cell
926   2  -0.001205  -926                imp:p=113     $150' East of Pump Cell
927   2  -0.001205  -927                imp:p=113     $200' East of Pump Cell
928   2  -0.001205  -928                imp:p=113     $250' East of Pump Cell
929   2  -0.001205  -929                imp:p=113     $300' East of Pump Cell
930   2  -0.001205  -930                imp:p=113     $350' East of Pump Cell
931   2  -0.001205  -931                imp:p=113     $400' East of Pump Cell
932   2  -0.001205  -932                imp:p=113     $450' East of Pump Cell
933   2  -0.001205  -933                imp:p=113     $500' East of Pump Cell
c     DETECTORS SOUTH OF ENCLOSURE---------------------------------------------
934   2  -0.001205  -934                imp:p=113     $30 cm S Between C2 & CCBT
935   2  -0.001205  -935                imp:p=113     $30 cm S Between C1 & CCBT
936   2  -0.001205  -936                imp:p=113     $30 cm South @ PC Entry
937   2  -0.001205  -937                imp:p=113     $30 cm Above CCBT
938   2  -0.001205  -938                imp:p=113     $30 cm Above SFT
939   2  -0.001205  -939                imp:p=113     $30 cm South of SFT
940   2  -0.001205  -940                imp:p=113     $50' South of SFT
941   2  -0.001205  -941                imp:p=113     $100' South of SFT
942   2  -0.001205  -942                imp:p=113     $150' South of SFT
943   2  -0.001205  -943                imp:p=113     $200' South of SFT
944   2  -0.001205  -944                imp:p=113     $250' south of SFT
945   2  -0.001205  -945                imp:p=113     $300' South of SFT
946   2  -0.001205  -946                imp:p=113     $350' South of SFT
947   2  -0.001205  -947                imp:p=113     $400' South of SFT
c     DETECTORS WEST OF ENCLOSURE----------------------------------------------
948   2  -0.001205  -948                imp:p=113     $30 cm W Between C2 & 210Z
949   2  -0.001205  -949                imp:p=113     $Roof @ 25' above grade
950   2  -0.001205  -950                imp:p=113     $Roof @ 33' agove grade
c     DETECTORS INSIDE ENCLOSURE-----------------------------------------------
951   2  -0.001205  -951                imp:p=14     $30 cm from SSRT1 (Side)
952   2  -0.001205  -952                imp:p=14     $30 cm from SSRT1 (Top)
```

Appendix C – Example SSRT Enclosure MCNP Input File (SSRT) (cont.)

```
953   2  -0.001205  -953                imp:p=3      $In between Pumps

c     SURFACE CARDS
c
c     CELL 1-------------------------------------------------------------------
1     rcc 0 0   1.27 0 0 413.08 295.29                  $Void
2     rcc 0 0   1.27 0 0 289.96 395.29                  $Lower Source
3     rcc 0 0 291.23 0 0 223.12 395.45                  $Upper Source
4     rcc 0 0 514.35 0 0  66.84 395.45                  $Head Space
5     rcc 0 0   0.00 0 0 581.98 396.24                  $SSRT1 Wall
6     rpp -541.02 541.02 -541.02 541.02 0 736.6         $Cell 1 Interior
c     CELL 2-------------------------------------------------------------------
101   rcc -1127.76 0   1.27 0 0 413.08 295.29           $Void
102   rcc -1127.76 0   1.27 0 0 289.96 395.29           $Lower Source
103   rcc -1127.76 0 291.23 0 0 223.12 395.45           $Upper Source
104   rcc -1127.76 0 514.35 0 0  66.84 395.45           $Head Space
105   rcc -1127.76 0   0.00 0 0 581.98 396.24           $SSRT2 Wall
106   rpp -1668.78 -586.74 -541.02 541.02 0 736.6       $Cell 2 Interior
c     WALKPLATE (1/2" Steel)---------------------------------------------------
201   rpp -1714.50 1143 -586.74 586.74 736.6 737.87     $Main Enclosure
202   rpp -586.74 586.74 586.74 601.98 736.6 737.87     $Bumpout
c     CONCRETE ENCLOSURE INCLUDING CELL 1 ADD'L BUMPOUT (6 @ 3" Segments)-------
301   rpp -1668.78 1097.28 -541.02 541.02 0 736.6       $All Cells & Inner Walls
302   rpp -1676.40 1104.90 -548.64 548.64 0 736.6       $Outer Wall Segment 1
303   rpp -1684.02 1112.52 -556.26 556.26 0 736.6       $Outer Wall Segment 2
304   rpp -1691.64 1120.14 -563.88 563.88 0 736.6       $Outer Wall Segment 3
305   rpp -1699.26 1127.76 -571.50 571.50 0 736.6       $Outer Wall Segment 4
306   rpp -1706.88 1135.38 -579.12 579.12 0 736.6       $Outer Wall Segment 5
307   rpp -1714.50 1143.00 -586.74 586.74 0 736.6       $Outer Wall Segment 6
308   rpp  -586.74  586.74  586.74 594.36 0 736.6       $Bumpout Segment 1
309   rpp  -586.74  586.74  594.36 601.98 0 736.6       $Bumpout Segment 2
c     CONCRETE ENCLOSURE BETWEEN CELLS 1 & 2 (6 @ 3" Segments)------------------
401   rpp  -548.64 -541.02 -541.02 541.02 0 736.6       $Inner Wall Segment 1
402   rpp  -556.26 -548.64 -541.02 541.02 0 736.6       $Inner Wall Segment 2
403   rpp  -563.88 -556.26 -541.02 541.02 0 736.6       $Inner Wall Segment 3
404   rpp  -571.50 -563.88 -541.02 541.02 0 736.6       $Inner Wall Segment 4
405   rpp  -579.12 -571.50 -541.02 541.02 0 736.6       $Inner Wall Segment 5
406   rpp  -586.74 -579.12 -541.02 541.02 0 736.6       $Inner Wall Segment 6
407   rpp  -586.74 -541.02 -541.02 541.02 0 736.6       $All Inner Wall Segments
c     CONCRETE ENCLOSURE BETWEEN CELL 1 & PUMP CELL (6 @ 3" Segments)-----------
501   rpp   541.02  548.64 -541.02 541.02 0 736.6       $Inner Wall Segment 1
502   rpp   548.64  556.26 -541.02 541.02 0 736.6       $Inner Wall Segment 2
503   rpp   556.26  563.88 -541.02 541.02 0 736.6       $Inner Wall Segment 3
504   rpp   563.88  571.50 -541.02 541.02 0 736.6       $Inner Wall Segment 4
505   rpp   571.50  579.12 -541.02 541.02 0 736.6       $Inner Wall Segment 5
506   rpp   579.12  586.74 -541.02 541.02 0 736.6       $Inner Wall Segment 6
507   rpp   541.02  586.74 -541.02 541.02 0 736.6       $All Inner Wall Segments
c     ENCLOSURE SLAB (2.75')---------------------------------------------------
601   rpp -1714.50 1143 -586.74 586.74 -83.82 0         $Main Slab
602   rpp -586.74 586.74 586.74 594.36 -83.82 0         $C1 Bumpout Segment 1
603   rpp -586.74 586.74 594.36 601.98 -83.82 0         $C1 Bumpout Segment 2
c     PUMP CELL----------------------------------------------------------------
701   rcc 746.76 -250.86 30.48 0 760.80 0 5.12          $West Pump Source
702   rcc 746.76 -251.46 30.48 0 762.00 0 5.72          $West Pump Housing (l = 25')
703   rcc 883.92 -250.86 30.48 0 760.80 0 5.12          $East Pump Source
704   rcc 883.92 -251.46 30.48 0 762.00 0 5.72          $East Pump Housing (l = 25')
705   rpp 586.74 1005.84 -411.48 -403.86   0.00 736.6   $Inner Wall 3" Segment 1
706   rpp 586.74 1005.84 -419.10 -411.48   0.00 736.6   $Inner Wall 3" Segment 2
707   rpp 586.74 1005.84 -426.72 -419.10   0.00 736.6   $Inner Wall 3" Segment 3
708   rpp 586.74 1005.84 -434.34 -426.72   0.00 736.6   $Inner Wall 3" Segment 4
709   rpp 586.74 1005.84 -434.34 -403.86   0.00 736.6   $All Inner Wall Segments
710   rpp 586.74  708.66 -586.74 -541.02 198.12 457.2   $S Wall Entry (4' x 8'6" @ 6'6" above
grade)
711   rpp 586.74 1097.28 -541.02  541.02   0.00 736.6   $PC Interior
c     ENCLOSURE EXTERIOR-------------------------------------------------------
801   pz 0          $Grade Level
802   pz -83.82     $Foundation/Soil Depth (2.75')
803   so 17000      $Problem boundary
```

Appendix C – Example SSRT Enclosure MCNP Input File (SSRT) (cont.)

```
c     TRANSFER LINES
804   rpp -537.21 -476.25 -586.74 -541.02  26.67 69.85    $Opening
805   rpp -537.21 -476.25 -565.15 -562.61  26.67 69.85    $Plate
806   rcc -521.97 -731.52 59.06 0 166.4 0 3.90    $Upper Lt Inner 3" Line
807   rcc -521.97 -731.52 59.06 0 166.4 0 4.45    $Upper Lt Outer 3" Line
808   rcc -521.97 -731.52 59.06 0 166.4 0 7.70    $Upper Lt Inner 6" Jacket
809   rcc -521.97 -731.52 59.06 0 166.4 0 8.41    $Upper Lt Outer 6" Jacket
810   rcc -491.49 -731.52 59.06 0 166.4 0 3.90    $Upper Rt Inner 3" Line
811   rcc -491.49 -731.52 59.06 0 166.4 0 4.45    $Upper Rt Outer 3" Line
812   rcc -491.49 -731.52 59.06 0 166.4 0 7.70    $Upper Rt Inner 6" Jacket
813   rcc -491.49 -731.52 59.06 0 166.4 0 8.41    $Upper Rt Outer 6" Jacket
814   rcc -521.97 -731.52 37.46 0 166.4 0 3.90    $Lower Lt Inner 3" Line
815   rcc -521.97 -731.52 37.46 0 166.4 0 4.45    $Lower Lt Outer 3" Line
816   rcc -521.97 -731.52 37.46 0 166.4 0 7.70    $Lower Lt Inner 6" Jacket
817   rcc -521.97 -731.52 37.46 0 166.4 0 8.41    $Lower Lt Outer 6" Jacket
818   rcc -491.49 -731.52 37.46 0 166.4 0 5.12    $Lower Rt Inner 4" Line
819   rcc -491.49 -731.52 37.46 0 166.4 0 5.72    $Lower Rt Outer 4" Line
820   rcc -491.49 -731.52 37.46 0 166.4 0 7.70    $Lower Rt Inner 6" Jacket
821   rcc -491.49 -731.52 37.46 0 166.4 0 8.41    $Lower Rt Outer 6" Jacket
c     CCBT ENCLOSURE
822   rpp -1490.98 -424.18 -731.52 -701.04 0 243.84   $North Wall
823   rpp -1490.98 -424.18 -732.52 -731.52 0 243.84   $Kill Zone South of N Wall
c     DETECTORS ABOVE WALKPLATE-----------------------------------------------
901   rcc     0.00 0 767.87 0 0 1 45     $30 cm above Cell 1 Walkplate
902   rcc -1127.76 0 767.87 0 0 1 45     $30 cm above Cell 2 Walkplate
903   rcc   842.01 0 767.87 0 0 1 45     $30 cm above Pump Cell Walkplate
c     DETECTORS NORTH OF ENCLOSURE--------------------------------------------
904   rcc -1127.76   616.74 60 0 0 90 15     $30 cm North of Cell 2
905   rcc -1127.76  1821.18 60 0 0 90 30     $40' N Cell 2 Fenceline
906   rcc     0.00   631.98 60 0 0 90 15     $30 cm North of Cell 1
907   rcc     0.00  1821.18 60 0 0 90 30     $40' N Cell 1 Fenceline
908   rcc   842.01   616.74 60 0 0 90 15     $30 cm North of Pump Cell
909   rcc   842.01  1821.18 60 0 0 90 30     $40' N PC Fenceline
910   rcc  -586.74  3649.98 60 0 0 90 30     $100' North of Enclosure
911   rcc  -586.74  5173.98 60 0 0 90 30     $150' North of Enclosure
912   rcc  -586.74  6697.98 60 0 0 90 30     $200' North of Enclosure
913   rcc  -586.74  8221.98 60 0 0 90 30     $250' North of Enclosure
914   rcc  -586.74  9745.98 60 0 0 90 30     $300' North of Enclosure
915   rcc  -586.74 11269.98 60 0 0 90 30     $350' North of Enclosure
916   rcc  -586.74 12793.98 60 0 0 90 30     $400' North of Enclosure
917   rcc  -586.74 14317.98 60 0 0 90 30     $450' North of Enclosure
918   rcc  -586.74 15841.98 60 0 0 90 30     $500' North of Enclosure
c     DETECTORS EAST OF ENCLOSURE---------------------------------------------
919   rcc  1173.0 0 60 0 0 90 15      $30 cm East of Pump Cell
920   rcc  1447.8 0 60 0 0 90 30      $10' East of Pump Cell
921   rcc  1752.6 0 60 0 0 90 30      $20' East of Pump Cell
922   rcc  2057.4 0 60 0 0 90 30      $30' East of Pump Cell
923   rcc  2362.2 0 60 0 0 90 30      $40' East of Pump Cell
924   rcc  2667.0 0 60 0 0 90 30      $50' East of Pump Cell
925   rcc  4191.0 0 60 0 0 90 30      $100' East of Pump Cell
926   rcc  5715.0 0 60 0 0 90 30      $150' East of Pump Cell
927   rcc  7239.0 0 60 0 0 90 30      $200' East of Pump Cell
928   rcc  8763.0 0 60 0 0 90 30      $250' East of Pump Cell
929   rcc 10287.0 0 60 0 0 90 30      $300' East of Pump Cell
930   rcc 11811.0 0 60 0 0 90 30      $350' East of Pump Cell
931   rcc 13335.0 0 60 0 0 90 30      $400' East of Pump Cell
932   rcc 14859.0 0 60 0 0 90 30      $450' East of Pump Cell
933   rcc 16383.0 0 60 0 0 90 30      $500' East of Pump Cell
c     DETECTORS SOUTH OF ENCLOSURE--------------------------------------------
934   rcc -1127.76   -616.74  60.00 0 0 90 15    $30 cm South Between C2 & CCBT
935   rcc     0.00   -616.74  60.00 0 0 90 15    $30 cm South Between C1 & CCBT
936   rcc   647.70   -616.74 258.12 0 0 90 15    $30 cm South @ PC Entry
937   rcc  -381.00  -1234.44 338.61 0 0  1 45    $30 cm Above CCBT
938   rcc  -114.30  -2072.64 275.11 0 0  1 45    $30 cm Above SFT
939   rcc  -114.30  -2323.62  60.00 0 0 90 30    $30 cm South of SFT
940   rcc  -114.30  -3817.62  60.00 0 0 90 30    $50' South of SFT
941   rcc  -114.30  -5341.62  60.00 0 0 90 30    $100' South of SFT
942   rcc  -114.30  -6865.62  60.00 0 0 90 30    $150' South of SFT
```

Appendix C – Example SSRT Enclosure MCNP Input File (SSRT) (cont.)

```
943   rcc  -114.30  -8389.62  60.00 0 0 90 30    $200' South of SFT
944   rcc  -114.30  -9913.62  60.00 0 0 90 30    $250' south of SFT
945   rcc  -114.30 -11437.62  60.00 0 0 90 30    $300' South of SFT
946   rcc  -114.30 -12961.62  60.00 0 0 90 30    $350' South of SFT
947   rcc  -114.30 -14485.62  60.00 0 0 90 30    $400' South of SFT
c     DETECTORS WEST OF ENCLOSURE-----------------------------------------------
948   rcc  -1744.50     0.00   60.00 0 0 90 15   $30 cm W Between Cell 2 & 210Z
949   rcc  -2316.48 -1250.44  762.00 0 0 90 30   $Roof @ 25' above grade
950   rcc  -2316.48 -1250.44 1005.84 0 0 90 30   $Roof @ 33' agove grade
c     DETECTORS INSIDE ENCLOSURE------------------------------------------------
951   rcc  426.24 0  60.00 0 0 90 15     $30 cm from SSRT1 (Side)
952   rcc    0.00 0 624.36 0 0  1 45     $30 cm from SSRT1 (Top)
953   s    815.34 129.54 30.48 15        $In Between Pumps

c     DATA CARDS
c
mode p
phys:p 20 0 0 0
c
sdef  cel d1
      erg d2
      rad fcel d3
      ext fcel d4
      pos fcel d5
      axs fcel d6
c
sc1   Source Distribution
si1   L 2 7 12 14 48 52 56 60
sp1   0.499707 0.499707 0.000225 0.000225 0.000029 0.000029 0.000029 0.000049
c
c     Source Energy Groupings
si2   0.01   0.05   0.10   0.20   0.30   0.40
      0.60   0.80   1.00   1.33   1.66   2.00
      2.50   3.00
c
c     Spectral Probabilities (0.0002 Ci/gal DSS)
sp2   0.000E+00  1.526E-01  1.268E-03  2.097E-02  2.705E-03  2.835E-03
      6.653E-02  6.945E-01  9.573E-03  4.052E-02  8.468E-03  1.220E-06
      1.752E-07  1.496E-10
c
sc3   Sources' Radii
ds3   S  d7  d7  d8  d8  d9  d9  d9 d8
c
sc4   Sources' Extents
ds4   S d10 d10 d11 d11 d12 d12 d12 d12
c
sc5   Sources' Positions
ds5   S d13 d14 d15 d16 d17 d18 d19 d20
c
sc6   Sources' Axes
ds6   S d21 d21 d22 d22 d22 d22 d22 d22
c
sc7   SSRT Sources' Radius
si7   0 395.45
sp7   -21 1
c
sc8   Pump Sources' & 4" Xfer Line Radius
si8   0 5.12
sp8   -21 1
c
sc9   3" Xfer Lines' Radius
si9   0 3.90
sp9   -21 1
c
sc10  SSRT Sources' Extent
si10  0 513.08
sp10   0 1
c
```

Appendix C – Example SSRT Enclosure MCNP Input File (SSRT) (cont.)

```
sc11  Pump Sources' Extent
si11  0 760.8
sp11  0 1
c
sc12  Xfer Lines' Extent
si12  0 166.4
sp12  0 1
c
sc13  SSRT1 Source Position
si13  L 0 0 1.27
sp13  1
c
sc14  SSRT2 Source Position
si14  L -1127.76 0 1.27
sp14  1
c
sc15  West Pump Source Position
si15  L 746.76 -250.86 30.48
sp15  1
c
sc16  East Pump Source Position
si16  L 883.92 -250.86 30.48
sp16  1
c
sc17  Upper Left Transfer Line
si17  L -521.97 -731.52 59.06
sp17  1
c
sc18  Upper Right Transfer Line
si18  L -491.49 -731.52 59.06
sp18  1
c
sc19  Lower Left Transfer Line
si19  L -521.97 -731.52 37.46
sp19  1
c
sc20  Lower Right Transfer Line
si20  L -491.49 -731.52 37.46
sp20  1
c
sc21  SSRT Sources' Axis
si21  L 0 0 1
sp21  1
c
sc22  Pump Sources' Axis
si22  L 0 1 0
sp22  1
c
c     Dose Conversion Factors (ICRP 74, Hp(10)) for photons
c
de0   0.01  0.015  0.02  0.03  0.04
      0.05  0.06   0.08  0.1   0.15
      0.2   0.3    0.4   0.5   0.6
      0.8   1      1.5   3     6
      10
df0   2.4624E-05  3.0508E-04  3.8053E-04  2.9584E-04  2.3494E-04
      2.0853E-04  1.9889E-04  2.1100E-04  2.4253E-04  3.4711E-04
      4.5977E-04  6.8012E-04  8.8452E-04  1.0761E-03  1.2535E-03
      1.5808E-03  1.8779E-03  2.5094E-03  3.9770E-03  6.3080E-03
      9.2791E-03
c
c     Maximum ORIGEN-ARP output for 0.1 yr decay = 9.11E+06 p/s/gallon
c     Multiplier = 9.11E+06 p/s/gallon * 73375 gallons = 6.6845E+11
c
fc4   Walkplate Detectors (mrem/hr)
f4:p  901 902 903
fm4   6.6845E+11
fq4   f d
```

Appendix C – Example SSRT Enclosure MCNP Input File (SSRT) (cont.)

```
c
fc14  North Detectors (mrem/hr)
f14:p 904 905 906 907 908 909 910 911 912 913 914 915 916 917 918
fm14  6.6845E+11
fq14  f d
c
fc24  East Detectors (mrem/hr)
f24:p 919 920 921 922 923 924 925 926 927 928 929 930 931 932 933
fm24  6.6845E+11
fq24  f d
c
fc34  South Detectors (mrem/hr)
f34:p 934 935 936 937 938 939 940 941 942 943 944 945 946 947
fm34  6.6845E+11
fq34  f d
c
fc44  West Detectors (mrem/hr)
f44:p 948 949 950
fm44  6.6845E+11
fq44  f d
c
fc54  Inside Detectors (mrem/hr)
f54:p 951 952 953
fm54  6.6845E+11
fq54  f d
c
fc5   Pt Detectors @ Transfer Lines
f5:p  -560.38 -616.74 48.26 5  $30 cm west; 30 cm from wall
      -506.73 -616.74 48.26 5  $30 cm from wall in-between all lines
      -453.08 -616.74 48.26 5  $30 cm east; 30 cm from wall
      -506.73 -643.89 48.26 5  $Center of all lines midway between SSRT & CCBT
      -453.08 -643.89 48.26 5  $30 cm west; ctr lines
      -422.12 -643.89 48.26 5  $2' west
      -391.64 -643.89 48.26 5  $3' west
      -361.16 -643.89 48.26 5  $4' west
      -330.68 -643.89 48.26 5  $5' west
      -300.20 -643.89 48.26 5  $6' west
      -269.72 -643.89 48.26 5  $7' west
      -239.24 -643.89 48.26 5  $8' west
      -208.76 -643.89 48.26 5  $9' west
      -178.28 -643.89 48.26 5  $10' west
fm5   6.6845E+11
fq5   f d
c
c     Water (Density = 0.998207 g/cc)  [Ref: PNNL-15870, Rev. 1]
m1     1000 -0.111894   8000 -0.888106
c
c     Dry Air (Density = 0.001205 g/cc)  [Ref: PNNL-15870, Rev. 1]
m2     6000 -0.000124   7000 -0.755268   8000 -0.231781  18000 -0.012827
c
c     SS304L (Density = 8.00 g/cc)  [Ref: PNNL-15870, Rev. 1]
m3     6000 -0.000150  14000 -0.005000  15000 -0.000230  16000 -0.000150
      24000 -0.190000  25000 -0.010000  26000 -0.694480  28000 -0.100000
c
c     Portland Concrete [Density = 2.3 g/cc]  [Ref: PNNL-15870, Rev. 1]
m4     1000 -0.010000   6000 -0.001000   8000 -0.529107  11000 -0.016000
      12000 -0.002000  13000 -0.033872  14000 -0.337021  19000 -0.013000
      20000 -0.044000  26000 -0.014000
c
ctme  100000
cut:p j 0.1
```

Appendix D – Example Penetration MCNP Input File (N514)

```
1 SSRT/CELL FULL OF 0.0002 CI/GAL DSS - N5 & N14 PENETRATIONS (6")
c
c     REF:  C-SP-Z-00001, Typical Pipe Penetration Shielding Detail & Schedule
c
c     CELL CARDS
c
c     SSRT-----------------------------------------------------------------------
1     1  -0.998207   -1                   imp:p=1    $Source (H2O)
2     2  -0.001205   -2:-101              imp:p=8    $Head Space + Inside Pipe (Air)
3     3  -8.00       -3 102               imp:p=13   $Tanktop (Steel)
4     2  -0.001205  (-4 102):(102 -103)   imp:p=20   $Cell Interior (Air)
5     3  -8.00       -5 103               imp:p=30   $Walkplate (Steel)
6     2  -0.001205   (1 2 3 4 5 -6 105 107 108 201 202 203):(102 -106)
                                          imp:p=56   $Atmosphere
7     0               6                   imp:p=0    $Universe
c     NOZZLE---------------------------------------------------------------------
101   3  -7.92       101 -102             imp:p=13   $Pipe (Steel)
102   3  -7.92       104 -105             imp:p=13   $Split Plate Ring (Steel)
103   3  -7.92       106 -107             imp:p=13   $Pipe Sleeve (Steel)
104   3  -7.92      -108                  imp:p=13   $Blind Flange (Steel)
c     VOLUME DETECTORS-----------------------------------------------------------
201   2  -0.001205  -201                  imp:p=56   $30 cm Above Walkplate Over Flange
202   2  -0.001205  (102 -104)            imp:p=56   $1/8" Air Gap/Detector
203   2  -0.001205   102 -202             imp:p=56   $Between Flange & Sleeve Outside Pipe
204   2  -0.001205  -203                  imp:p=56   $30 cm Above Walkplate; 4' from pipe

c     SURFACE CARDS
c
c     SSRT-----------------------------------------------------------------------
1     rcc 0 0   0    0 0 100.00 395.45      $Source
2     rcc 0 0 100.00 0 0  66.84 395.45      $Head Space
3     rcc 0 0 166.84 0 0   0.79 395.45      $Tanktop
4     rcc 0 0 167.63 0 0 154.62 395.45      $Cell Air
5     rcc 0 0 322.25 0 0   1.27 395.45      $1/2" Steel Walkplate
6     rcc 0 0   0    0 0 500.00 395.45      $Problem boundary
c     NOZZLE---------------------------------------------------------------------
101   rcc  0 0 166.84 0 0 180.81  7.70      $Pipe Inner (Sch40 6")
102   rcc  0 0 166.84 0 0 180.81  8.41      $Pipe Outer (Sch40 6")
103   rcc  0 0 322.25 0 0   1.27 15.24      $Walkplate Opening (d = 12")
104   rcc  0 0 323.52 0 0   1.27  8.73      $Split Plate Ring Inner (d = 6.875")
105   rcc  0 0 323.52 0 0   1.27 20.32      $Split Plate Ring Outer (d = 16")
106   rcc  0 0 324.79 0 0  15.24 15.24      $Pipe Sleeve Inner (d = 12")
107   rcc  0 0 324.79 0 0  15.24 15.88      $Pipe Sleeve Outer (d = 12.5")
108   rcc  0 0 347.65 0 0   1.27 13.97      $Blind Flange (d = 11")
c     VOLUME DETECTORS-----------------------------------------------------------
201   rcc  0 0 353.52 0 0 1.00  7.70        $30 cm Above Walkplate Over Flange
202   rcc  0 0 340.03 0 0 7.62 15.24        $Between Flange & Sleeve Outside Pipe
203   rcc  121.92 0 353.52 0 0 1.00 15      $30 cm Above Walkplate; 4' from pipe

c     DATA CARDS
c
mode p
phys:p 20 0 0 0
c
sdef  cel 1
      erg d1
      rad d2
      ext d3
      pos 0 0 0
      axs 0 0 1
c
c     Source Energy Groupings
si1   0.01   0.05   0.10   0.20   0.30   0.40
      0.60   0.80   1.00   1.33   1.66   2.00
      2.50   3.00
c
```

Appendix D – Example Penetration MCNP Input File (N514) (cont.)

```
c     Spectral Probabilities (0.0002 Ci/gal DSS)
sp1   0.000E+00  1.526E-01  1.268E-03  2.097E-02  2.705E-03  2.835E-03
      6.653E-02  6.945E-01  9.573E-03  4.052E-02  8.468E-03  1.220E-06
      1.752E-07  1.496E-10
c
sc2   Source Radius
si2   0 395.45
sp2   -21 1
c
sc3   Source Extent
si3   0 100
sp3   0 1
c
c     Dose Conversion Factors (ICRP 74, Hp(10)) for photons
c
de0   0.01  0.015  0.02  0.03  0.04
      0.05  0.06   0.08  0.1   0.15
      0.2   0.3    0.4   0.5   0.6
      0.8   1      1.5   3     6
      10
df0   2.4624E-05  3.0508E-04  3.8053E-04  2.9584E-04  2.3494E-04
      2.0853E-04  1.9889E-04  2.1100E-04  2.4253E-04  3.4711E-04
      4.5977E-04  6.8012E-04  8.8452E-04  1.0761E-03  1.2535E-03
      1.5808E-03  1.8779E-03  2.5094E-03  3.9770E-03  6.3080E-03
      9.2791E-03
c
c     Maximum ORIGEN-ARP output for 0.1 yr decay = 9.11E+06 p/s/gallon
c     Multiplier = 9.11E+06 p/s/gallon * 12978.4 gallons = 1.1823E+11
c
fc4   Volume Detectors (mrem/hr)
f4:p  201 202 203 204
fm4   1.1823E+11
fq4   f d
c
c     Water (Density = 0.998207 g/cc)  [Ref: PNNL-15870, Rev. 1]
m1     1000 -0.111894  8000 -0.888106
c
c     Dry Air (Density = 0.001205 g/cc)  [Ref: PNNL-15870, Rev. 1]
m2     6000 -0.000124   7000 -0.755268   8000 -0.231781  18000 -0.012827
c
c     SS304L (Density = 8.00 g/cc)  [Ref: PNNL-15870, Rev. 1]
m3     6000 -0.000150  14000 -0.005000  15000 -0.000230  16000 -0.000150
      24000 -0.190000  25000 -0.010000  26000 -0.694480  28000 -0.100000
c
ctme  400
cut:p j 0.1
```

Appendix E – Example Transfer Line MCNP Input File (4LINE20)

```
4" Diam. Sch 40 SS Transfer Line Containing 0.0002 Ci/gal DSS
c
1     1  -0.998207   -1          imp:p=1    $Salt Solution
2     2  -8.00        1 -2       imp:p=1    $Line (SS304L)
3     3  -0.001205    2 -3       imp:p=1    $Atmosphere (Air)
4     0               3          imp:p=0    $Universe

1     rcc -304.20 0 0 608.40 0 0 5.12     $Source
2     rcc -304.80 0 0 609.60 0 0 5.72     $20' Line; t = 0.6 cm)
3     so   700                            $Problem Boundary

c
mode p
phys:p 20 0 0 0 0
sdef  cel 1
      erg d1
      rad d2
      ext d3
      pos -304.20 0 0
      axs 1 0 0
c
c     Source Energy Groupings
si1   0.01   0.05   0.10   0.20   0.30   0.40
      0.60   0.80   1.00   1.33   1.66   2.00
      2.50   3.00
c
c     Spectral Probabilities (0.0002 Ci/gal DSS)
sp1   0.000E+00  1.526E-01  1.268E-03  2.097E-02  2.705E-03  2.835E-03
      6.653E-02  6.945E-01  9.573E-03  4.052E-02  8.468E-03  1.220E-06
      1.752E-07  1.496E-10
c
sc2   Source Radius
si2   0 5.12
sp2   -21 1
c
sc3   Source Extent
si3   0 608.40
sp3   0 1
c
c     Dose Conversion Factors (ICRP 74, Hp(10)) for photons
c
de0   0.01  0.015  0.02  0.03  0.04
      0.05  0.06   0.08  0.1   0.15
      0.2   0.3    0.4   0.5   0.6
      0.8   1      1.5   3     6
      10
df0   2.4624E-05  3.0508E-04  3.8053E-04  2.9584E-04  2.3494E-04
      2.0853E-04  1.9889E-04  2.1100E-04  2.4253E-04  3.4711E-04
      4.5977E-04  6.8012E-04  8.8452E-04  1.0761E-03  1.2535E-03
      1.5808E-03  1.8779E-03  2.5094E-03  3.9770E-03  6.3080E-03
      9.2791E-03
c
c
c     Maximum ORIGEN-ARP output for 0.1 yr decay = 9.11E+06 p/s/gallon
c     Multiplier = 9.11E+06 p/s/gallon * 13.2363 gallons = 120582483
c
fc5   Ring detectors at midpoint of line (mrem/hr)
f5x:p 0   10.72 1   $5 cm
      0   35.72 5   $30 cm
      0   66.68 5   $2'
      0   97.16 5   $3'
      0  127.64 5   $4'
      0  158.12 5   $5'
      0  188.60 5   $6'
      0  219.08 5   $7'
      0  249.56 5   $8'
      0  280.04 5   $9'
      0  310.52 5   $10'
```

Appendix E – Example Transfer Line MCNP Input File (4LINE20) (cont.)

```
      0  341.00 5   $11'
      0  371.48 5   $12'
      0  401.96 5   $13'
      0  432.44 5   $14'
      0  462.92 5   $15'
      0  493.40 5   $16'
      0  523.88 5   $17'
      0  554.36 5   $18'
      0  584.84 5   $19'
      0  615.32 5   $20'
fm5   120582483
fq5   f d
c
c     Water (Density = 0.998207 g/cc)    [Ref: PNNL-15870, Rev. 1]
m1     1000 -0.111894  8000 -0.888106
c
c     SS304L (Density = 8.00 g/cc)       [Ref: PNNL-15870, Rev. 1]
m2     6000 -0.000150  14000 -0.005000  15000 -0.000230  16000 -0.000150
      24000 -0.190000  25000 -0.010000  26000 -0.694480  28000 -0.100000
c
c     Dry Air (Density = 0.001205 g/cc)  [Ref: PNNL-15870, Rev. 1]
m3     6000 -0.000124   7000 -0.755268   8000 -0.231781  18000 -0.012827
c
ctme 30
cut:p j 0.1
```

Appendix F – Source Volumes and Tally Multiplier Computations

SSRT MODEL	π	Rad (r) (cm)	Ht (h) (cm)	Vol (V) $V = \pi r^2 h$ (cc)	(gal)	%V	Source Strength (SS) (g/sec/gal)	Multiplier = V x SS (g/s)
SSRT1 Lower	3.142	395.29	289.96	1.42E+08	37602	n/a	n/a	n/a
SSRT1 Upper	3.142	395.45	223.12	1.10E+08	28957	n/a		
SSRT1 Void	3.142	295.29	413.08	1.13E+08	29893	n/a		
SSRT1 = Lower + Upper + Void	n/a			1.39E+08	36666	0.499707		
SSRT2 = SSRT1	n/a				36666	0.499707		
East Pump	3.142	5.12	760.08	62596	16.54	0.000225		
West Pump = East Pump	n/a	n/a	n/a	n/a	16.54	0.000225		
3" Jacketed Transfer Line	3.142	3.9	166.4	7951	2.10	0.000029		
3" Jacketed Transfer Line	"				2.10	0.000029		
3" Jacketed Transfer Line	"				2.10	0.000029		
4" Jacketed Transfer Line	3.142	5.12	166.4	13704	3.62	0.000049		
Total = SSRT1 + SSRT2 + EPump + WPump + (3 x 3" Lines) + 4" Line					73375	1.000000	9.11E+06	6.6845E+11

PENETRATION MODELS	π	Rad (r) (cm)	Ht (h) (cm)	Vol (V) $V = \pi r^2 h$ (cc)	Vol (V) gal	%V	Source Strength (SS) (g/sec/gal)	Multiplier = V x SS (g/s)
SSRT	3.142	395.45	100	4.91E+07	12978.4	1.00	9.11E+06	1.1823E+11

Appendix F – Source Volumes and Tally Multiplier Computations (cont.)

1" OD XFER LINE MODELS	π	Rad (r) (cm)	Ht (h) (cm)	Vol (V) $V = \pi r^2 h$ (cc)	Vol (V) gal	%V	Source Strength (SS) (g/sec/gal)	Multiplier = V x SS (g/s)
1' Length	3.142	1.33	29.80	165.6	0.0437	1.00	9.11E+06	398543
2' Length	3.142	1.33	60.28	335.0	0.0885	1.00	9.11E+06	806179
3' Length	3.142	1.33	90.76	504.4	0.1332	1.00	9.11E+06	1213816
4' Length	3.142	1.33	121.24	673.8	0.1780	1.00	9.11E+06	1621453
5' Length	3.142	1.33	151.72	843.1	0.2227	1.00	9.11E+06	2029090
6' Length	3.142	1.33	182.20	1012.5	0.2675	1.00	9.11E+06	2436726
7' Length	3.142	1.33	212.68	1181.9	0.3122	1.00	9.11E+06	2844363
8' Length	3.142	1.33	243.16	1351.3	0.3570	1.00	9.11E+06	3252000
9' Length	3.142	1.33	273.64	1520.7	0.4017	1.00	9.11E+06	3659637
10' Length	3.142	1.33	304.12	1690.0	0.4465	1.00	9.11E+06	4067273
11' Length	3.142	1.33	334.60	1859.4	0.4912	1.00	9.11E+06	4474910
12' Length	3.142	1.33	365.08	2028.8	0.5360	1.00	9.11E+06	4882547
13' Length	3.142	1.33	395.56	2198.2	0.5807	1.00	9.11E+06	5290184
14' Length	3.142	1.33	426.04	2367.6	0.6254	1.00	9.11E+06	5697820
15' Length	3.142	1.33	456.52	2537.0	0.6702	1.00	9.11E+06	6105457
16' Length	3.142	1.33	487.00	2706.3	0.7149	1.00	9.11E+06	6513094
17' Length	3.142	1.33	517.48	2875.7	0.7597	1.00	9.11E+06	6920731
18' Length	3.142	1.33	547.96	3045.1	0.8044	1.00	9.11E+06	7328367
19' Length	3.142	1.33	578.44	3214.5	0.8492	1.00	9.11E+06	7736004
20' Length	3.142	1.33	608.92	3383.9	0.8939	1.00	9.11E+06	8143641

Appendix F – Source Volumes and Tally Multiplier Computations (cont.)

2" OD XFER LINE MODELS	π	Rad (r) (cm)	Ht (h) (cm)	Vol (V) $V = \pi r^2 h$ (cc)	Vol (V) gal	%V	Source Strength (SS) (g/sec/gal)	Multiplier = V x SS (g/s)
1' Length	3.142	2.63	29.70	645.4	0.1705	1.00	9.11E+06	1553184
2' Length	3.142	2.63	60.18	1307.7	0.3455	1.00	9.11E+06	3147160
3' Length	3.142	2.63	90.66	1970.0	0.5204	1.00	9.11E+06	4741135
4' Length	3.142	2.63	121.14	2632.4	0.6954	1.00	9.11E+06	6335110
5' Length	3.142	2.63	151.62	3294.7	0.8704	1.00	9.11E+06	7929085
6' Length	3.142	2.63	182.10	3957.0	1.0453	1.00	9.11E+06	9523060
7' Length	3.142	2.63	212.58	4619.4	1.2203	1.00	9.11E+06	11117036
8' Length	3.142	2.63	243.06	5281.7	1.3953	1.00	9.11E+06	12711011
9' Length	3.142	2.63	273.54	5944.0	1.5703	1.00	9.11E+06	14304986
10' Length	3.142	2.63	304.02	6606.4	1.7452	1.00	9.11E+06	15898961
11' Length	3.142	2.63	334.50	7268.7	1.9202	1.00	9.11E+06	17492936
12' Length	3.142	2.63	364.98	7931.0	2.0952	1.00	9.11E+06	19086911
13' Length	3.142	2.63	395.46	8593.4	2.2701	1.00	9.11E+06	20680887
14' Length	3.142	2.63	425.94	9255.7	2.4451	1.00	9.11E+06	22274862
15' Length	3.142	2.63	456.42	9918.0	2.6201	1.00	9.11E+06	23868837
16' Length	3.142	2.63	486.90	10580.4	2.7950	1.00	9.11E+06	25462812
17' Length	3.142	2.63	517.38	11242.7	2.9700	1.00	9.11E+06	27056787
18' Length	3.142	2.63	547.86	11905.0	3.1450	1.00	9.11E+06	28650763
19' Length	3.142	2.63	578.34	12567.4	3.3199	1.00	9.11E+06	30244738
20' Length	3.142	2.63	608.82	13229.7	3.4949	1.00	9.11E+06	31838713

Appendix F – Source Volumes and Tally Multiplier Computations (cont.)

3" OD XFER LINE MODELS	π	Rad (r) (cm)	Ht (h) (cm)	Vol (V) $V = \pi r^2 h$ (cc)	Vol (V) gal	%V	Source Strength (SS) (g/sec/gal)	Multiplier = V x SS (g/s)
1' Length	3.142	3.90	29.38	1403.9	0.3709	1.00	9.11E+06	3378595
2' Length	3.142	3.90	59.86	2860.3	0.7556	1.00	9.11E+06	6883686
3' Length	3.142	3.90	90.34	4316.8	1.1404	1.00	9.11E+06	10388776
4' Length	3.142	3.90	120.82	5773.2	1.5251	1.00	9.11E+06	13893867
5' Length	3.142	3.90	151.30	7229.7	1.9099	1.00	9.11E+06	17398958
6' Length	3.142	3.90	181.78	8686.1	2.2946	1.00	9.11E+06	20904049
7' Length	3.142	3.90	212.26	10142.6	2.6794	1.00	9.11E+06	24409139
8' Length	3.142	3.90	242.74	11599.0	3.0641	1.00	9.11E+06	27914230
9' Length	3.142	3.90	273.22	13055.4	3.4489	1.00	9.11E+06	31419321
10' Length	3.142	3.90	303.70	14511.9	3.8336	1.00	9.11E+06	34924412
11' Length	3.142	3.90	334.18	15968.3	4.2184	1.00	9.11E+06	38429503
12' Length	3.142	3.90	364.66	17424.8	4.6031	1.00	9.11E+06	41934593
13' Length	3.142	3.90	395.14	18881.2	4.9879	1.00	9.11E+06	45439684
14' Length	3.142	3.90	425.62	20337.7	5.3726	1.00	9.11E+06	48944775
15' Length	3.142	3.90	456.10	21794.1	5.7574	1.00	9.11E+06	52449866
16' Length	3.142	3.90	486.58	23250.6	6.1421	1.00	9.11E+06	55954957
17' Length	3.142	3.90	517.06	24707.0	6.5269	1.00	9.11E+06	59460047
18' Length	3.142	3.90	547.54	26163.4	6.9117	1.00	9.11E+06	62965138
19' Length	3.142	3.90	578.02	27619.9	7.2964	1.00	9.11E+06	66470229
20' Length	3.142	3.90	608.50	29076.3	7.6812	1.00	9.11E+06	69975320

Appendix F – Source Volumes and Tally Multiplier Computations (cont.)

4" OD XFER LINE MODELS	π	Rad (r) (cm)	Ht (h) (cm)	Vol (V) $V = \pi r^2 h$ (cc)	Vol (V) gal	%V	Source Strength (SS) (g/sec/gal)	Multiplier = V x SS (g/s)
1' Length	3.142	5.12	29.28	2411.4	0.6370	1.00	9.11E+06	5803181
2' Length	3.142	5.12	59.76	4921.5	1.3001	1.00	9.11E+06	11844197
3' Length	3.142	5.12	90.24	7431.7	1.9633	1.00	9.11E+06	17885212
4' Length	3.142	5.12	120.72	9941.9	2.6264	1.00	9.11E+06	23926228
5' Length	3.142	5.12	151.20	12452.1	3.2895	1.00	9.11E+06	29967244
6' Length	3.142	5.12	181.68	14962.3	3.9526	1.00	9.11E+06	36008260
7' Length	3.142	5.12	212.16	17472.4	4.6157	1.00	9.11E+06	42049276
8' Length	3.142	5.12	242.64	19982.6	5.2788	1.00	9.11E+06	48090292
9' Length	3.142	5.12	273.12	22492.8	5.9420	1.00	9.11E+06	54131308
10' Length	3.142	5.12	303.60	25003.0	6.6051	1.00	9.11E+06	60172324
11' Length	3.142	5.12	334.08	27513.1	7.2682	1.00	9.11E+06	66213340
12' Length	3.142	5.12	364.56	30023.3	7.9313	1.00	9.11E+06	72254356
13' Length	3.142	5.12	395.04	32533.5	8.5944	1.00	9.11E+06	78295372
14' Length	3.142	5.12	425.52	35043.7	9.2576	1.00	9.11E+06	84336388
15' Length	3.142	5.12	456.00	37553.9	9.9207	1.00	9.11E+06	90377403
16' Length	3.142	5.12	486.48	40064.0	10.5838	1.00	9.11E+06	96418419
17' Length	3.142	5.12	516.96	42574.2	11.2469	1.00	9.11E+06	102459435
18' Length	3.142	5.12	547.44	45084.4	11.9100	1.00	9.11E+06	108500451
19' Length	3.142	5.12	577.92	47594.6	12.5732	1.00	9.11E+06	114541467
20' Length	3.142	5.12	608.40	50104.8	13.2363	1.00	9.11E+06	120582483

Appendix G – Dose Rate Profile (mrem/hr) for SSRT Enclosure

LOCATION	DOSE RATE CRITERIA (mrem/hr)	DOSE RATE (mrem/hr)
Detectors Inside Enclosure		
30 cm from Side of SSRT	5-100	14
30 cm from Top of SSRT	5-100	17
30 cm from Pumps	5-100	0.8
Detectors Over Enclosure		
30 cm above East Cell	5-100 (ALARA)	6.3
30 cm above West Cell	5-100 (ALARA)	6.3
30 cm above Pump Cell	5-100 (ALARA)	0.06
Detectors North of Enclosure		
30 cm N of West Cell	<0.5	≤0.01
40' N of West Cell @ Fenceline	<0.05	≤0.01
30 cm N of East Cell	<0.5	≤0.01
40' N of East Cell @ Fenceline	<0.05	≤0.01
30 cm N of Pump Cell	<0.5	≤0.01
40' N of PC @ Fenceline	<0.05	≤0.01
100' North	<0.05	≤0.01
150' North	<0.05	≤0.01
200' North	<0.05	≤0.01
250' North	<0.05	≤0.01
300' North	<0.05	≤0.01
350' North	<0.05	≤0.01
400' North	<0.05	≤0.01
450' North	<0.05	≤0.01
500' North	<0.05	≤0.01
Detectors East of Enclosure		
30 cm East of Pump Cell	<0.5	≤0.01
10' East of Pump Cell	<0.5	≤0.01
20' East of Pump Cell	<0.5	≤0.01
30' East of Pump Cell	<0.5	≤0.01
40' East of Pump Cell	<0.5	≤0.01
50' East of Pump Cell	<0.5	≤0.01
100' East of Pump Cell	<0.5	≤0.01
150' East of Pump Cell	<0.5	≤0.01
200' East of Pump Cell	<0.5	≤0.01
250' East of Pump Cell	<0.5	≤0.01
300' East of Pump Cell	<0.5	≤0.01
350' East of Pump Cell	<0.5	≤0.01
400' East of Pump Cell	<0.5	≤0.01
450' East of Pump Cell	<0.5	≤0.01
500' East of Pump Cell	<0.5	≤0.01

Appendix G – Dose Rate Profile (mrem/hr) for SSRT Enclosure (cont.)

LOCATION	DOSE RATE CRITERIA (mrem/hr)	DOSE RATE (mrem/hr)
Detectors South of Enclosure		
30 cm S Between West Cell & CCBT	<0.5	≤0.01
30 cm S Between East Cell & CCBT	<0.5	≤0.01
30 cm South @ PC Entry	<0.5	≤0.01
30 cm Above CCBT	<0.5	≤0.01
30 cm Above SFT	<0.5	≤0.01
30 cm South of SFT	<0.5	≤0.01
50' South of SFT	<0.5	≤0.01
100' South of SFT	<0.5	≤0.01
150' South of SFT	<0.5	≤0.01
200' South of SFT	<0.5	≤0.01
250' south of SFT	<0.5	≤0.01
300' South of SFT	<0.5	≤0.01
350' South of SFT	<0.5	≤0.01
400' South of SFT	<0.5	≤0.01
Detectors West of Enclosure		
30 cm West of West Cell	<0.5	≤0.01
210-Z Roof @ 25' above grade	<0.5	≤0.01
210-Z Roof @ 33' above grade	<0.5	0.03
Detectors @ Jacketed Transfer Lines Between SSRT & CCBT		
30 cm west; 30 cm from wall	<5.0	0.8
30 cm from wall in-between all lines	<5.0	3.8
30 cm from wall	<5.0	0.9
Center of all lines	<5.0	3.5
30 cm east; ctr lines	<5.0	1.0
2' east	<5.0	0.5
3' east	<5.0	0.3
4' east	<5.0	0.2
5' east	<5.0	0.1
6' east	<5.0	0.09
7' east	<5.0	0.07
8' east	<5.0	0.05
9' east	<5.0	0.04
10' east	<5.0	0.04

Appendix H – Dose Rates (mrem/hr) Through SSRT Enclosure Walkplate Penetrations

Description	***Dose Rates***
General Area Above Walkplate	
No Penetration for Comparison	6.3 mrem/hr @ 30 cm above
Open Unshielded Circular Penetrations	
3” diam.	6.7 mrem/hr @ 30 cm above
4” diam.	6.7 mrem/hr @ 30 cm above
6” diam.	6.7 mrem/hr @ 30 cm above
12” diam.	7.4 mrem/hr @ 30 cm above
18” diam.	8.2 mrem/hr @ 30 cm above
24” diam.	9.1 mrem/hr @ 30 cm above
36” diam.	9.9 mrem/hr @ 30 cm above
Ladder Openings	
Ladder 1 (4’ x 4’)	12 mrem/hr @ 30 cm above
Ladder 2 & 3 (4’ x 4’ 9”)	12 mrem/hr @ 30 cm above
Ladder 5 (4’ x 3’ 9”)	12 mrem/hr @ 30 cm above
Miscellaneous Openings	
Manway (diam. = 3’ 5 7/8”) + ½” Steel Box Cover Shield	3.6 mrem/hr @ 30 cm above
Sump Pump Access (2' 2" x 2' 10 1/2")	10 mrem/hr @ 30 cm above
Nozzles	
N5 & N14 (pipe = 6” diam.; opening = 12” diam.)	2.1 mrem/hr @ 30 cm above 5.9 mrem/hr @ 1/8” gap 8.5 mrem/hr between flange & pipe sleeve
N8, N12 & N16 (pipe = 3” diam.; opening = 8 ½” diam.)	2.7 mrem/hr @ 30 cm above 6.0 mrem/hr @ 1/8” gap 9.6 mrem/hr between flange & pipe sleeve
N18 (Agitator; pipe = 24” diam.; opening = 33” diam.)	2.3 mrem/hr @ 30 cm above 5.7 mrem/hr @ 1/8” gap 7.6 mrem/hr between flange & pipe sleeve
Transfer Lines	
3” diam.	6.1 @ 30 cm above 9.5 mrem/hr @ 1/8” gap
4” diam.	6.1 mrem/hr @ 30 cm above 9.3 mrem/hr @ 1/8” gap

Calculation Continuation Sheet

Calculation No.	Sheet No.	Rev.
N-CLC-Z-00021	40 of 43	0

Appendix I – Dose Rates (mrem/hr) from Unshielded 1" Diameter Transfer Lines (Schedule 40 Steel)

Distance	Line Length																			
	1'	***2'***	***3'***	***4'***	***5'***	***6'***	***7'***	***8'***	***9'***	***10'***	***11'***	***12'***	***13'***	***14'***	***15'***	***16'***	***17'***	***18'***	***19'***	***20'***
5 cm	0.4	0.4	0.4	0.4	0.4	0.4	0.4	0.4	0.4	0.4	0.4	0.4	0.4	0.4	0.4	0.4	0.4	0.4	0.4	0.4
30 cm	0.03	0.05	0.07	0.08	0.08	0.08	0.08	0.09	0.09	0.09	0.09	0.09	0.09	0.09	0.09	0.09	0.09	0.09	0.09	0.09
2'	≤0.01	≤0.01	0.02	0.03	0.03	0.03	0.04	0.04	0.04	0.04	0.04	0.04	0.04	0.04	0.04	0.04	0.04	0.04	0.04	0.04
3'	≤0.01	≤0.01	≤0.01	≤0.01	0.02	0.02	0.02	0.02	0.02	0.02	0.03	0.03	0.03	0.03	0.03	0.03	0.03	0.03	0.03	0.03
4'	≤0.01	≤0.01	≤0.01	≤0.01	≤0.01	≤0.01	≤0.01	≤0.01	0.02	0.02	0.02	0.02	0.02	0.02	0.02	0.02	0.02	0.02	0.02	0.02
5'	≤0.01	≤0.01	≤0.01	≤0.01	≤0.01	≤0.01	≤0.01	≤0.01	≤0.01	≤0.01	≤0.01	≤0.01	≤0.01	≤0.01	≤0.01	≤0.01	≤0.01	0.02	0.02	0.02
6'	≤0.01	≤0.01	≤0.01	≤0.01	≤0.01	≤0.01	≤0.01	≤0.01	≤0.01	≤0.01	≤0.01	≤0.01	≤0.01	≤0.01	≤0.01	≤0.01	≤0.01	≤0.01	≤0.01	≤0.01
7'	≤0.01	≤0.01	≤0.01	≤0.01	≤0.01	≤0.01	≤0.01	≤0.01	≤0.01	≤0.01	≤0.01	≤0.01	≤0.01	≤0.01	≤0.01	≤0.01	≤0.01	≤0.01	≤0.01	≤0.01
8'	≤0.01	≤0.01	≤0.01	≤0.01	≤0.01	≤0.01	≤0.01	≤0.01	≤0.01	≤0.01	≤0.01	≤0.01	≤0.01	≤0.01	≤0.01	≤0.01	≤0.01	≤0.01	≤0.01	≤0.01
9'	≤0.01	≤0.01	≤0.01	≤0.01	≤0.01	≤0.01	≤0.01	≤0.01	≤0.01	≤0.01	≤0.01	≤0.01	≤0.01	≤0.01	≤0.01	≤0.01	≤0.01	≤0.01	≤0.01	≤0.01
10'	≤0.01	≤0.01	≤0.01	≤0.01	≤0.01	≤0.01	≤0.01	≤0.01	≤0.01	≤0.01	≤0.01	≤0.01	≤0.01	≤0.01	≤0.01	≤0.01	≤0.01	≤0.01	≤0.01	≤0.01
11'	≤0.01	≤0.01	≤0.01	≤0.01	≤0.01	≤0.01	≤0.01	≤0.01	≤0.01	≤0.01	≤0.01	≤0.01	≤0.01	≤0.01	≤0.01	≤0.01	≤0.01	≤0.01	≤0.01	≤0.01
12'	≤0.01	≤0.01	≤0.01	≤0.01	≤0.01	≤0.01	≤0.01	≤0.01	≤0.01	≤0.01	≤0.01	≤0.01	≤0.01	≤0.01	≤0.01	≤0.01	≤0.01	≤0.01	≤0.01	≤0.01
13'	≤0.01	≤0.01	≤0.01	≤0.01	≤0.01	≤0.01	≤0.01	≤0.01	≤0.01	≤0.01	≤0.01	≤0.01	≤0.01	≤0.01	≤0.01	≤0.01	≤0.01	≤0.01	≤0.01	≤0.01
14'	≤0.01	≤0.01	≤0.01	≤0.01	≤0.01	≤0.01	≤0.01	≤0.01	≤0.01	≤0.01	≤0.01	≤0.01	≤0.01	≤0.01	≤0.01	≤0.01	≤0.01	≤0.01	≤0.01	≤0.01
15'	≤0.01	≤0.01	≤0.01	≤0.01	≤0.01	≤0.01	≤0.01	≤0.01	≤0.01	≤0.01	≤0.01	≤0.01	≤0.01	≤0.01	≤0.01	≤0.01	≤0.01	≤0.01	≤0.01	≤0.01
16'	≤0.01	≤0.01	≤0.01	≤0.01	≤0.01	≤0.01	≤0.01	≤0.01	≤0.01	≤0.01	≤0.01	≤0.01	≤0.01	≤0.01	≤0.01	≤0.01	≤0.01	≤0.01	≤0.01	≤0.01
17'	≤0.01	≤0.01	≤0.01	≤0.01	≤0.01	≤0.01	≤0.01	≤0.01	≤0.01	≤0.01	≤0.01	≤0.01	≤0.01	≤0.01	≤0.01	≤0.01	≤0.01	≤0.01	≤0.01	≤0.01
18'	≤0.01	≤0.01	≤0.01	≤0.01	≤0.01	≤0.01	≤0.01	≤0.01	≤0.01	≤0.01	≤0.01	≤0.01	≤0.01	≤0.01	≤0.01	≤0.01	≤0.01	≤0.01	≤0.01	≤0.01
19'	≤0.01	≤0.01	≤0.01	≤0.01	≤0.01	≤0.01	≤0.01	≤0.01	≤0.01	≤0.01	≤0.01	≤0.01	≤0.01	≤0.01	≤0.01	≤0.01	≤0.01	≤0.01	≤0.01	≤0.01
20'	≤0.01	≤0.01	≤0.01	≤0.01	≤0.01	≤0.01	≤0.01	≤0.01	≤0.01	≤0.01	≤0.01	≤0.01	≤0.01	≤0.01	≤0.01	≤0.01	≤0.01	≤0.01	≤0.01	≤0.01

Calculation Continuation Sheet

Calculation No.	Sheet No.	Rev.
N-CLC-Z-00021	41 of 43	0

Appendix J – Dose Rates (mrem/hr) from Unshielded 2" Diameter Transfer Lines (Schedule 40 Steel)

Distance	Line Length																			
	1'	**2'**	**3'**	**4'**	**5'**	**6'**	**7'**	**8'**	**9'**	**10'**	**11'**	**12'**	**13'**	**14'**	**15'**	**16'**	**17'**	**18'**	**19'**	**20'**
5 cm	1.1	1.2	1.2	1.3	1.3	1.3	1.3	1.3	1.3	1.3	1.3	1.3	1.3	1.3	1.3	1.3	1.3	1.3	1.3	1.3
30 cm	0.1	0.2	0.2	0.3	0.3	0.3	0.3	0.3	0.3	0.3	0.3	0.3	0.3	0.3	0.3	0.3	0.3	0.3	0.3	0.3
2'	0.03	0.06	0.08	0.1	0.1	0.1	0.1	0.1	0.1	0.1	0.1	0.1	0.1	0.1	0.2	0.2	0.2	0.2	0.2	0.2
3'	≤0.01	0.03	0.04	0.05	0.06	0.07	0.07	0.08	0.08	0.09	0.09	0.09	0.09	0.1	0.1	0.1	0.1	0.1	0.1	0.1
4'	≤0.01	0.02	0.02	0.03	0.04	0.04	0.05	0.05	0.06	0.06	0.06	0.06	0.07	0.07	0.07	0.07	0.07	0.07	0.07	0.07
5'	≤0.01	≤0.01	0.02	0.02	0.03	0.03	0.03	0.04	0.04	0.04	0.04	0.05	0.05	0.05	0.05	0.05	0.05	0.05	0.06	0.06
6'	≤0.01	≤0.01	≤0.01	≤0.01	0.02	0.02	0.02	0.03	0.03	0.03	0.03	0.04	0.04	0.04	0.04	0.04	0.04	0.04	0.04	0.04
7'	≤0.01	≤0.01	≤0.01	≤0.01	≤0.01	0.02	0.02	0.02	0.02	0.02	0.03	0.03	0.03	0.03	0.03	0.03	0.03	0.03	0.04	0.04
8'	≤0.01	≤0.01	≤0.01	≤0.01	≤0.01	≤0.01	≤0.01	0.02	0.02	0.02	0.02	0.02	0.02	0.02	0.03	0.03	0.03	0.03	0.03	0.03
9'	≤0.01	≤0.01	≤0.01	≤0.01	≤0.01	≤0.01	≤0.01	≤0.01	≤0.01	0.02	0.02	0.02	0.02	0.02	0.02	0.02	0.02	0.02	0.02	0.02
10'	≤0.01	≤0.01	≤0.01	≤0.01	≤0.01	≤0.01	≤0.01	≤0.01	≤0.01	≤0.01	≤0.01	≤0.01	0.02	0.02	0.02	0.02	0.02	0.02	0.02	0.02
11'	≤0.01	≤0.01	≤0.01	≤0.01	≤0.01	≤0.01	≤0.01	≤0.01	≤0.01	≤0.01	≤0.01	≤0.01	≤0.01	≤0.01	≤0.01	0.02	0.02	0.02	0.02	0.02
12'	≤0.01	≤0.01	≤0.01	≤0.01	≤0.01	≤0.01	≤0.01	≤0.01	≤0.01	≤0.01	≤0.01	≤0.01	≤0.01	≤0.01	≤0.01	≤0.01	≤0.01	≤0.01	0.02	0.02
13'	≤0.01	≤0.01	≤0.01	≤0.01	≤0.01	≤0.01	≤0.01	≤0.01	≤0.01	≤0.01	≤0.01	≤0.01	≤0.01	≤0.01	≤0.01	≤0.01	≤0.01	≤0.01	≤0.01	≤0.01
14'	≤0.01	≤0.01	≤0.01	≤0.01	≤0.01	≤0.01	≤0.01	≤0.01	≤0.01	≤0.01	≤0.01	≤0.01	≤0.01	≤0.01	≤0.01	≤0.01	≤0.01	≤0.01	≤0.01	≤0.01
15'	≤0.01	≤0.01	≤0.01	≤0.01	≤0.01	≤0.01	≤0.01	≤0.01	≤0.01	≤0.01	≤0.01	≤0.01	≤0.01	≤0.01	≤0.01	≤0.01	≤0.01	≤0.01	≤0.01	≤0.01
16'	≤0.01	≤0.01	≤0.01	≤0.01	≤0.01	≤0.01	≤0.01	≤0.01	≤0.01	≤0.01	≤0.01	≤0.01	≤0.01	≤0.01	≤0.01	≤0.01	≤0.01	≤0.01	≤0.01	≤0.01
17'	≤0.01	≤0.01	≤0.01	≤0.01	≤0.01	≤0.01	≤0.01	≤0.01	≤0.01	≤0.01	≤0.01	≤0.01	≤0.01	≤0.01	≤0.01	≤0.01	≤0.01	≤0.01	≤0.01	≤0.01
18'	≤0.01	≤0.01	≤0.01	≤0.01	≤0.01	≤0.01	≤0.01	≤0.01	≤0.01	≤0.01	≤0.01	≤0.01	≤0.01	≤0.01	≤0.01	≤0.01	≤0.01	≤0.01	≤0.01	≤0.01
19'	≤0.01	≤0.01	≤0.01	≤0.01	≤0.01	≤0.01	≤0.01	≤0.01	≤0.01	≤0.01	≤0.01	≤0.01	≤0.01	≤0.01	≤0.01	≤0.01	≤0.01	≤0.01	≤0.01	≤0.01
20'	≤0.01	≤0.01	≤0.01	≤0.01	≤0.01	≤0.01	≤0.01	≤0.01	≤0.01	≤0.01	≤0.01	≤0.01	≤0.01	≤0.01	≤0.01	≤0.01	≤0.01	≤0.01	≤0.01	≤0.01

Calculation Continuation Sheet

Calculation No.	Sheet No.	Rev.
N-CLC-Z-00021	42 of 43	0

Appendix K – Dose Rates (mrem/hr) from Unshielded 3" Diameter Transfer Lines (Schedule 40 Steel)

Distance	Line Length																			
	1'	**2'**	**3'**	**4'**	**5'**	**6'**	**7'**	**8'**	**9'**	**10'**	**11'**	**12'**	**13'**	**14'**	**15'**	**16'**	**17'**	**18'**	**19'**	**20'**
5 cm	1.7	2.0	2.0	2.0	2.0	2.0	2.0	2.0	2.0	2.0	2.0	2.0	2.0	2.1	2.1	2.0	2.0	2.0	2.0	2.0
30 cm	0.2	0.4	0.4	0.5	0.5	0.5	0.5	0.5	0.5	0.5	0.5	0.5	0.5	0.5	0.5	0.5	0.5	0.5	0.5	0.5
2'	0.06	0.1	0.2	0.2	0.2	0.2	0.2	0.3	0.3	0.3	0.3	0.3	0.3	0.3	0.3	0.3	0.3	0.3	0.3	0.3
3'	0.03	0.06	0.08	0.1	0.1	0.1	0.1	0.2	0.2	0.2	0.2	0.2	0.2	0.2	0.2	0.2	0.2	0.2	0.2	0.2
4'	0.02	0.03	0.05	0.06	0.07	0.08	0.09	0.1	0.1	0.1	0.1	0.1	0.1	0.1	0.1	0.1	0.1	0.1	0.1	0.1
5'	≤0.01	0.02	0.03	0.04	0.05	0.06	0.06	0.07	0.08	0.08	0.09	0.09	0.09	0.1	0.1	0.1	0.1	0.1	0.1	0.1
6'	≤0.01	≤0.01	0.02	0.03	0.04	0.04	0.05	0.05	0.06	0.06	0.07	0.07	0.07	0.07	0.08	0.08	0.08	0.08	0.08	0.09
7'	≤0.01	≤0.01	0.02	0.02	0.03	0.03	0.04	0.04	0.04	0.05	0.05	0.05	0.06	0.06	0.06	0.06	0.07	0.07	0.07	0.07
8'	≤0.01	≤0.01	≤0.01	0.02	0.02	0.02	0.03	0.03	0.03	0.04	0.04	0.04	0.05	0.05	0.05	0.05	0.05	0.06	0.06	0.06
9'	≤0.01	≤0.01	≤0.01	≤0.01	0.02	0.02	0.02	0.03	0.03	0.03	0.03	0.04	0.04	0.04	0.04	0.04	0.04	0.05	0.05	0.05
10'	≤0.01	≤0.01	≤0.01	≤0.01	≤0.01	0.02	0.02	0.02	0.02	0.03	0.03	0.03	0.03	0.03	0.03	0.04	0.04	0.04	0.04	0.04
11'	≤0.01	≤0.01	≤0.01	≤0.01	≤0.01	≤0.01	0.02	0.02	0.02	0.02	0.02	0.03	0.03	0.03	0.03	0.03	0.03	0.03	0.03	0.04
12'	≤0.01	≤0.01	≤0.01	≤0.01	≤0.01	≤0.01	≤0.01	≤0.01	0.02	0.02	0.02	0.02	0.02	0.02	0.03	0.03	0.03	0.03	0.03	0.03
13'	≤0.01	≤0.01	≤0.01	≤0.01	≤0.01	≤0.01	≤0.01	≤0.01	≤0.01	0.02	0.02	0.02	0.02	0.02	0.02	0.02	0.02	0.03	0.03	0.03
14'	≤0.01	≤0.01	≤0.01	≤0.01	≤0.01	≤0.01	≤0.01	≤0.01	≤0.01	≤0.01	≤0.01	0.02	0.02	0.02	0.02	0.02	0.02	0.02	0.02	0.02
15'	≤0.01	≤0.01	≤0.01	≤0.01	≤0.01	≤0.01	≤0.01	≤0.01	≤0.01	≤0.01	≤0.01	≤0.01	0.02	0.02	0.02	0.02	0.02	0.02	0.02	0.02
16'	≤0.01	≤0.01	≤0.01	≤0.01	≤0.01	≤0.01	≤0.01	≤0.01	≤0.01	≤0.01	≤0.01	≤0.01	≤0.01	≤0.01	0.02	0.02	0.02	0.02	0.02	0.02
17'	≤0.01	≤0.01	≤0.01	≤0.01	≤0.01	≤0.01	≤0.01	≤0.01	≤0.01	≤0.01	≤0.01	≤0.01	≤0.01	≤0.01	≤0.01	≤0.01	0.02	0.02	0.02	0.02
18'	≤0.01	≤0.01	≤0.01	≤0.01	≤0.01	≤0.01	≤0.01	≤0.01	≤0.01	≤0.01	≤0.01	≤0.01	≤0.01	≤0.01	≤0.01	≤0.01	≤0.01	≤0.01	≤0.01	0.02
19'	≤0.01	≤0.01	≤0.01	≤0.01	≤0.01	≤0.01	≤0.01	≤0.01	≤0.01	≤0.01	≤0.01	≤0.01	≤0.01	≤0.01	≤0.01	≤0.01	≤0.01	≤0.01	≤0.01	≤0.01
20'	≤0.01	≤0.01	≤0.01	≤0.01	≤0.01	≤0.01	≤0.01	≤0.01	≤0.01	≤0.01	≤0.01	≤0.01	≤0.01	≤0.01	≤0.01	≤0.01	≤0.01	≤0.01	≤0.01	≤0.01

Calculation Continuation Sheet

Calculation No.	Sheet No.	Rev.
N-CLC-Z-00021	43 of 43	0

Appendix L – Dose Rates (mrem/hr) from Unshielded 4" Diameter Transfer Lines (Schedule 40 Steel)

Distance	Line Length																			
	1'	**2'**	**3'**	**4'**	**5'**	**6'**	**7'**	**8'**	**9'**	**10'**	**11'**	**12'**	**13'**	**14'**	**15'**	**16'**	**17'**	**18'**	**19'**	**20'**
5 cm	2.4	2.8	2.8	2.8	2.9	2.9	2.9	2.9	2.9	2.9	2.9	2.8	2.8	2.9	2.9	2.9	2.9	2.8	2.8	2.8
30 cm	0.3	0.5	0.7	0.7	0.8	0.8	0.8	0.8	0.8	0.8	0.8	0.8	0.8	0.8	0.8	0.8	0.8	0.8	0.8	0.8
2'	0.09	0.2	0.2	0.3	0.3	0.4	0.4	0.4	0.4	0.4	0.4	0.4	0.4	0.4	0.4	0.4	0.4	0.4	0.4	0.4
3'	0.04	0.09	0.1	0.2	0.2	0.2	0.2	0.2	0.3	0.3	0.3	0.3	0.3	0.3	0.3	0.3	0.3	0.3	0.3	0.3
4'	0.03	0.05	0.08	0.1	0.1	0.1	0.1	0.2	0.2	0.2	0.2	0.2	0.2	0.2	0.2	0.2	0.2	0.2	0.2	0.2
5'	0.02	0.03	0.05	0.07	0.08	0.09	0.1	0.1	0.1	0.1	0.1	0.1	0.1	0.2	0.2	0.2	0.2	0.2	0.2	0.2
6'	≤0.01	0.02	0.04	0.05	0.06	0.07	0.08	0.08	0.09	0.1	0.1	0.1	0.1	0.1	0.1	0.1	0.1	0.1	0.1	0.1
7'	≤0.01	0.02	0.03	0.04	0.04	0.05	0.06	0.06	0.07	0.08	0.08	0.09	0.09	0.1	0.1	0.1	0.1	0.1	0.1	0.1
8'	≤0.01	≤0.01	0.02	0.03	0.03	0.04	0.05	0.05	0.06	0.06	0.07	0.07	0.07	0.08	0.08	0.08	0.09	0.09	0.09	0.09
9'	≤0.01	≤0.01	0.02	0.02	0.03	0.03	0.04	0.04	0.05	0.05	0.05	0.06	0.06	0.06	0.07	0.07	0.07	0.07	0.08	0.08
10'	≤0.01	≤0.01	≤0.01	0.02	0.02	0.03	0.03	0.03	0.04	0.04	0.04	0.05	0.05	0.05	0.06	0.06	0.06	0.06	0.07	0.07
11'	≤0.01	≤0.01	≤0.01	≤0.01	0.02	0.02	0.03	0.03	0.03	0.03	0.04	0.04	0.04	0.05	0.05	0.05	0.05	0.05	0.06	0.06
12'	≤0.01	≤0.01	≤0.01	≤0.01	0.02	0.02	0.02	0.02	0.03	0.03	0.03	0.03	0.04	0.04	0.04	0.04	0.05	0.05	0.05	0.05
13'	≤0.01	≤0.01	≤0.01	≤0.01	≤0.01	0.02	0.02	0.02	0.02	0.03	0.03	0.03	0.03	0.03	0.04	0.04	0.04	0.04	0.04	0.04
14'	≤0.01	≤0.01	≤0.01	≤0.01	≤0.01	≤0.01	0.02	0.02	0.02	0.02	0.02	0.03	0.03	0.03	0.03	0.03	0.03	0.04	0.04	0.04
15'	≤0.01	≤0.01	≤0.01	≤0.01	≤0.01	≤0.01	≤0.01	0.02	0.02	0.02	0.02	0.02	0.02	0.03	0.03	0.03	0.03	0.03	0.03	0.03
16'	≤0.01	≤0.01	≤0.01	≤0.01	≤0.01	≤0.01	≤0.01	≤0.01	0.02	0.02	0.02	0.02	0.02	0.02	0.02	0.03	0.03	0.03	0.03	0.03
17'	≤0.01	≤0.01	≤0.01	≤0.01	≤0.01	≤0.01	≤0.01	≤0.01	≤0.01	0.02	0.02	0.02	0.02	0.02	0.02	0.02	0.02	0.03	0.03	0.03
18'	≤0.01	≤0.01	≤0.01	≤0.01	≤0.01	≤0.01	≤0.01	≤0.01	≤0.01	≤0.01	≤0.01	0.02	0.02	0.02	0.02	0.02	0.02	0.02	0.02	0.03
19'	≤0.01	≤0.01	≤0.01	≤0.01	≤0.01	≤0.01	≤0.01	≤0.01	≤0.01	≤0.01	≤0.01	≤0.01	0.02	0.02	0.02	0.02	0.02	0.02	0.02	0.02
20'	≤0.01	≤0.01	≤0.01	≤0.01	≤0.01	≤0.01	≤0.01	≤0.01	≤0.01	≤0.01	≤0.01	≤0.01	≤0.01	0.02	0.02	0.02	0.02	0.02	0.02	0.02