Attachment 3

SAVANNAH RIVER REMEDIATION
SALTSTONE DISPOSAL UNIT 6

DRAWING INDEX

SHT. NO.	DWG. NO.	DRAWING TITLE
		GENERAL
1	C-C2-Z-00002	COVER SHEET
2	C-C2-Z-00003	LEGEND, OVERVIEW ITEMS, GENERAL INFO (NOT IN PACKAGE)
3	C-C2-Z-00004	ABBREVIATIONS
4	C-C2-Z-00005	GENERAL STRUCTURAL NOTES
5	C-C2-Z-00007	STATEMENT OF SPECIAL INSPECTIONS SHEET 1 OF 3
6	C-C2-Z-00008	STATEMENT OF SPECIAL INSPECTIONS SHEET 2 OF 3
7	C-C2-Z-00009	STATEMENT OF SPECIAL INSPECTIONS SHEET 3 OF 3
		TANK SUBGRADE INTFACE/LEAKAGE DETECTION SYSTEM
8	C-CY-Z-00005	LEAKAGE DETECTION PLAN
9	C-CY-Z-00006	LEAKAGE DETECTION SECTIONS AND DETAILS (NOT IN PACKAGE)
10	C-CY-Z-00007	LEAKAGE DETECTION SECTIONS AND DETAILS (NOT IN PACKAGE)
		TANK STRUCTURE
11	C-CC-Z-00039	FOUNDATION PLAN
12	C-CC-Z-00040	OVERALL ROOF PLAN AND PARTIAL PLAN
13	C-CC-Z-00041	PARTIAL ROOF PLAN
14	C-CC-Z-00042	WALL AND COLUMN SECTIONS AND DETAIL
15	C-CC-Z-00043	TYPICAL ROOF SECTIONS
16	C-CC-Z-00044	SECTIONS AND DETAILS
17	C-CC-Z-00045	DETAILS
18	C-CM-Z-00013	DETAILS
19	C-CC-Z-00046	DETAILS
20	C-CC-Z-00047	DETAILS (NOT IN PACKAGE)
21	C-CM-Z-00014	STAIR TOWER PLAN SECTION AND DETAILS (NOT IN PACKAGE)
22	C-CY-Z-00008	LEAKAGE DETECTION MANHOLE PLAN SECTION AND DETAILS (NOT IN PACKAGE)

PRELIMINARY ISSUED FOR INTERNAL REVIEW

C C2 Z 00002 LATEST REVISION A

PROJ.	REV. NO.	REVISION	INITIAL AND DATE PRP'D	LEAD ENG	CHK'D/VERIF'D	APRV'D	APRV'D	APRV'D
SDU6	A	50% INFORMAL REVIEW	JW 1/31/12	[signature] 1/31/12				

THIS DRAWING HAS BEEN FURNISHED BY THE SAVANNAH RIVER SITE. THE INFORMATION AND IDEAS HERE THEREON MAY NOT BE USED NOR THE DRAWING REPRODUCED WITHOUT WRITTEN PERMISSION OF THE PRIME CONTRACTOR. ALL REPRODUCTIONS IN WHOLE OR IN PART, INCLUDING VENDOR'S SHOP DRAWINGS, SHALL BEAR OR REFER TO THIS STAMP.

REFERENCE DRAWINGS

REFERENCE STANDARDS

UNITED STATES DEPARTMENT OF ENERGY

SAVANNAH RIVER SITE

BLDG. NO.	SITE CLEARANCE NO.	DESIGN AREA NO.	DESIGN GROUP
451-6Z	N/A	Z451	CH2MHILL

TITLE

Z AREA
SALTSTONE DISPOSAL SITE
SDU 6
TANK DESIGN
GENERAL
COVER SHEET

SCALE	SHP DRAWING NO.	SHEET NO.	LATEST REVISION
1"= 1"	NA	1 OF 1	A

W.S. = ( ) REF FILES YES NO

LEVELS 1234567890123456789012345678901234567890123456789012345678901234567890123

PSC= 1 PLOT DATE 01-18-12 DRAWN BY (ORIG) JOE W TIME DATE LAST CADD REV. BY:

Scale shown on this drawing is only applicable when plotted at 30"x42" (actual drawing size)

Attachment 3

V/N

DO NOT SCALE DRAWING

ABBREVIATIONS

AB	ANCHOR BOLT
ADDL	ADDITIONAL
ADJ	ADJACENT
AL	ALUMINUM
ALTN	ALTERNATE
AVG	AVERAGE
@	AT
BTWN	BETWEEN
BF	BLIND FLANGE
BM	BEAM, BENCHMARK
BOT	BOTTOM
BRG	BEARING
°C	DEGREE CELSIUS
C TO C	CENTER TO CENTER
CHKD	CHECKERED
CJ	CONSTRUCTION JOINT
CL	CENTERLINE
CLDI	CEMENT LINED DUCTILE IRON
CLSF	CONTROLLED LOW STRENGTH FILL
CLR	CLEAR, CLEARANCE
CLSM	CONTROLLED LOW STRENGTH MATERIAL
COL	COLUMN
CONC	CONCRETE
CONN	CONNECTION
CONSTR	CONSTRUCTION
CONT	CONTINUED, CONTINUOUS, CONTINUATION
CONTR	CONTRACTOR
COORD	COORDINATE
CTR	CENTER
CTRD	CENTERED
CTSK	COUNTERSUNK
D	DRAIN
DBA	DEFORMED BAR ANCHOR
DBL	DOUBLE
DI	DUCTILE IRON
DIA	DIAMETER
DIAG	DIAGONAL
DN	DOWN
DWG	DRAWING
DWL	DOWEL
EA	EACH, EXHAUST AIR
EF	EACH FACE
EL	ELEVATION
ENGR	ENGINEER
EQL	EQUAL
EQL SP	EQUALLY SPACED
EQPT	EQUIPMENT
EW	EACH WAY
EXP	EXPANSION, EXPOSED
EXP AB	EXPANSION ANCHOR BOLT
EXP JT	EXPANSION JOINT
EXST, EXIST	EXISTING
EXT	EXTERIOR
°F	DEGREE FAHRENHEIT
FB	FLAT BAR
FDN	FOUNDATION
FG	FINISH GRADE
FLG	FLANGE
FRP	FIBERGLASS REINFORCED PLASTIC
FT	FOOT OR FEET
FTG	FOOTING
GA	GAUGE
GALV	GALVANIZED
GRTG	GRATING
H.A.S.	HEADED ANCHOR STUD
HORIZ	HORIZONTAL
HP	HORSEPOWER
HPT	HIGH POINT
HVAC	HEATING, VENTILATING AND AIR CONDITIONING
IE	INVERT ELEVATION
I.D.	INSIDE DIAMETER
I.F.	INSIDE FACE
IN	INCH
INVT	INVERT
JT	JOINT
KIP	THOUSAND POUNDS
L	ANGLE
LB	POUND
LF	LINEAR FEET
LLH	LONG LEG HORIZONTAL
LLV	LONG LEG VERTICAL
LONG	LONGITUDINAL
LPT	LOW POINT
MAX	MAXIMUM
MB	MACHINE BOLT
MECH	MECHANICAL
MFR	MANUFACTURER
MH	MANHOLE, MOUNTING HEIGHT
MIN	MINIMUM
MISC	MISCELLANEOUS
MJ	MECHANICAL JOINT
MTD	MOUNTED
MTG	MOUNTING
NGVD	NATIONAL GEODETIC VERTICAL DATUM
NIC	NOT IN CONTRACT
NS	NON-SHRINK
NTS	NOT TO SCALE
O TO O	OUT TO OUT
OC	ON CENTER
OD	OUTSIDE DIAMETER
O.F.	OUTSIDE FACE
OPNG	OPENING
OPP	OPPOSITE
PE	PLAIN END
PJF	PREMOULDED JOINT FILLER
PL	PLATE (STEEL)
PSF	POUNDS PER SQUARE FOOT
PSI	POUNDS PER SQUARE INCH
PSIG	POUNDS PER SQUARE INCH, GAUGE
R	RISER
R OR RAD	RADIUS
REINF	REINFORCED, REINFORCING, REINFORCE
REQD	REQUIRED
S	I-BEAM
SIM	SIMILAR
SP	SPACE OR SPACES, SPANDREL PANEL, STORMPROOF
SPEC, SPECS	SPECIFICATIONS
SPG	SPACING
SQ	SQUARE
SQ FT	SQUARE FOOT, FEET
SQ IN	SQUARE INCH
SST	STAINLESS STEEL
STD	STANDARD
STIF	STIFFENER
STL	STEEL
STRUCT	STRUCTURE
SYMM	SYMMETRICAL
T	TREAD
T&B	TOP AND BOTTOM
THD	THREAD
THK	THICKNESS
THRU	THROUGH
T.O.	TOP OF
TOC	TOP OF CONCRETE
TOF	TOP OF FOOTING
TOG	TOP OF GROUT, TOP OF GRATE
T.O.P.	TOP OF PARAPET
TOS	TOP OF SLAB
TOW	TOP OF WALL
TST	TOP OF STEEL
TYP	TYPICAL
UON	UNLESS OTHERWISE NOTED
UNO	UNLESS NOTED OTHERWISE
VERT	VERTICAL
W/	WITH
WP	WORKPOINT
WS	WATERSTOP
WWF	WELDED WIRE FABRIC

NOTES:

1. CONTACT ENGINEER FOR ABBREVIATIONS USED BUT NOT SHOWN ON THIS DRAWING.

GENERAL NOTE:

1. THIS IS A STANDARD LEGEND SHEET. THEREFORE, NOT ALL OF THE INFORMATION SHOWN MAY BE USED ON THIS PROJECT.

PRELIMINARY ISSUED FOR INTERNAL REVIEW

C C2 Z 00004 LATEST REVISION A

THIS DRAWING HAS BEEN FURNISHED BY THE SAVANNAH RIVER SITE. THE INFORMATION AND KNOW HOW THEREON MAY NOT BE USED NOR THE DRAWING REPRODUCED WITHOUT WRITTEN PERMISSION OF THE PRIME CONTRACTOR. ALL REPRODUCTIONS IN WHOLE OR IN PART, INCLUDING VENDORS SHOP DRAWINGS, SHALL BEAR OR REFER TO THIS STAMP.

REFERENCE DRAWINGS

REFERENCE STANDARDS

UNITED STATES DEPARTMENT OF ENERGY

SAVANNAH RIVER SITE

WBS NO.	SITE DRAWING NO.	DESIGN WBS NO.	DESIGN GROUP
451-62	N/A	Z451	CH2MHILL

TITLE

Z AREA
SALTSTONE DISPOSAL SITE
SDU 6
TANK DESIGN
GENERAL
ABBREVIATIONS

SCALE	DWG DRAWING NO.	SHEET NO.	LATEST REVISION
1"= 1"	NA	1 OF 1	A

Scale shown on this drawing is only applicable when plotted at 30"x42" Vectus/drawing sheet

PROJ.	REV. NO.	REVISION	INITIAL AND DATE: PRP'D	LEAD ENG	CHKD/VERF'D	APRV'D	APRV'D	APRV'D
SDU6	A	50% INFORMAL REVIEW	ILT 01-31-12	01-31-12				

W.S. # C 3 - REF FILES YES NO

LEVELS 1234567890123456789012345678901234567890123456789012345678901234567890123 PSC- 1 DRAWN BY (ORIGI-NAL L-T DATE) LAST CADD REV. BY: PLOT DATE 01-31-12 TIME

V/N

Attachment 3

DESIGN CRITERIA

1. APPLICABLE CODE: 2009 INTERNATIONAL BUILDING CODE (IBC), AS AMENDED BY SRS MANUAL WSRC-TM-95-1, ENGINEERING STANDARD 01060, REVISION 10. DESIGN IS IN ACCORDANCE WITH SALTSTONE FACILITY DISPOSAL UNIT (SDU) #6 TASK REQUIREMENTS AND CRITERIA DOCUMENT M-TC-Z-000008, REVISION 0, AND ADDENDUM DOCUMENT SRR-SDU-2011-00010.
2. PLANT MODIFICATION CLASSIFICATIONS:
   - FUNCTIONAL CLASSIFICATION = PS
   - HAZARD CLASSIFICATION = HC-2
   - PERFORMANCE CATERGORY = SDC-2, LIMIT STATE D
3. REFER TO THE DRAWINGS FOR ADDITIONAL AND SPECIFIC STRUCTURE LOADINGS AND REQUIREMENTS.
4. ROOF LOADS:
   - LIVE LOAD = 30 PSF
   - DEFLECTION CRITERIA FOR ROOF FRAMING MEMBERS:
     - TOTAL LOAD L/180
     - LIVE LOAD L/240
     - WHERE L IS THE MEMBER'S SPAN LENGTH
5. FLOOR LIVE LOADS:
   - EXITS AND STAIRS 100 PSF
   - DEFLECTION CRITERIA FOR FLOOR FRAMING MEMBERS:
     - TOTAL LOAD L/240
     - LIVE LOAD L/360
     - WHERE L IS THE MEMBER'S SPAN LENGTH
6. WIND LOAD:
   - ASCE 7 METHOD 2
   - BASIC WIND SPEED (3-SECOND GUST) = 100 MPH
   - EXPOSURE = C
   - INTERNAL PRESSURE COEFFICENT = 0.18
   - OCCUPANCY CATEGORY = IV
   - I = 1.15
   - COMPONENTS AND CLADDING DESIGNED FOR WIND PRESSURE IN ACCORDANCE WITH ASCE 7-05, 6.5.12.4.1, SEE SPECIFICATIONS FOR DESIGN WIND PRESSURES FOR EXTERIOR COMPONENT AND CLADDING MATERIALS.
7. SRS SDC-2 SEISMIC LOAD:
   - MAPPED SPECTRAL RESPONSE ACCELERATIONS
     - S_s = 0.344 g
     - S_1 = 0.131 g
   - DESIGN SPECTRAL RESPONSE ACCELERATIONS
     - S_{DS} = 0.350 g
     - S_{D1} = 0.199 g
   - SITE CLASS = D
   - OCCUPANCY CATEGORY = IV
   - IBC SEISMIC DESIGN CATEGORY = D
   - I = 1.5
   - RESPONSE MODIFICATION COEFFICENT
     - R = 1
   - BUILDING STRUCTURES HAVE BEEN ANALYZED USING THE EQUIVALENT LATERAL FORCE PROCEDURES OF ASCE 7-05. PRESTRESSED TANK SEISMIC LOADS IN ACCORDANCE WITH THE PROVISIONS OF ACI350.3-06 AS MODIFIED BY ASCE 7-05.
8. AWWA D110-05/06 SEISMIC LOAD:
   - SEISMIC ZONE, Z = 0.15
   - SOIL PROFILE, S = 1.5
   - IMPORTANCE FACTOR, I = 1.25
   - RESPONSE MODIFICATION FACTOR, R = 1
   - THE TANK STRUCTURE HAS BEEN DESIGNED PER EQUATIONS CONTAINED IN D110-05/06 WHERE MORE CONSERVATIVE THAN SDC-2 LOADINGS.
9. LATERAL FORCE-RESISTING SYSTEMS
   - TANK:
     - FLAT-BOTTOM GROUND SUPPORTED PRESTRESSED CONCRETE TANK WITH ANCHORED FLEXIBLE BASE.
   - STAIR STRUCTURE:
     - ORDINARY STEL CONCENTRICALLY BRACED FRAME.
10. SPECIAL LOADS:
    - A. GROUT UNIT WEIGHT = 113 PCF
    - B. GROUT BLEED WATER WEIGHT = 82 PCF
    - C. THERMAL LOADS:
      - AMBIENT TEMPERATURE RANGE -18°C TO 43°C
      - GROUT TEMPERATURE RANGE 10°C TO 95°C
    - D. CRANE LOAD ON FLOOR = 100 TON
11. SOIL DESIGN PARAMETERS:
    - A. NET ALLOWABLE SOIL BEARING PRESSURES: 10,000 PSF
    - B. EQUIVALENT DRAINED FLUID PRESSURES:
      - AT REST: 60 PCF
      - PASSIVE: 360 PCF
    - C. EQUIVALENT UNDRAINED FLUID PRESSURES:
      - AT REST: 91 PCF
      - PASSIVE: 235 PCF
    - D. MODULUS OF SUBGRADE REACTION: 43 KCF
    - E. VERTICAL SURCHARGE: EQUIVALENT 2 FEET OF SOIL
    - F. COEFFICENT OF FRICTION: 0.35
    - G. NATIVE SOIL UNIT WEIGHT: 120 PCF
    - H. DESIGN GROUND WATER ELEVATION:
      - SOIL FRICTION AND WEDGE FAILURE NOT CONSIDERED IN UPLIFT RESISTANCE:
      - NORMAL HIGH GWT WITH UPLIFT (FS =1.10): ELEVATION 225
12. STRUCTURES HAVE BEEN DESIGNED FOR DIFFERENTIAL SETTLEMENT OF 2 INCHES ACROSS THE RADIUS OF THE SDU6 TANK.

GENERAL INFORMATION

1. FOR ABBREVIATIONS NOT LISTED, SEE ASME Y14.38 "ABBREVIATIONS AND ACRONYMS: PUBLICATION AS DISTRIBUTED BY THE AMERICAN SOCIETY OF MECHANICAL ENGINEERS (ASME).
2. DESIGN DETAILS ARE INTENDED TO BE TYPICAL AND SHALL APPLY TO SIMILAR SITUATIONS OCCURRING THROUGHOUT THE PROJECT, WHETHER OR NOT THEY ARE INDIVIDUALLY CALLED OUT.
3. VERIFY FINAL OPENING DIMENSIONS IN SLABS AND DECKS WITH SALTSTONE DISPOSAL UNIT 6 BALANCE OF PLANT DRAWINGS PRIOR TO CONSTRUCTION OF THESE ELEMENTS.
4. STRUCTURAL MEMBERS SHALL NOT BE CUT OR MODIFIED FOR PIPES, DUCTS, ETC, UNLESS SPECFICALLY DETAILED OR APPROVED IN WRITING BY THE ENGINEER.
5. VISITS TO THE JOB SITE BY THE ENGINEER TO OBSERVE THE CONSTRUCTION DO NOT IN ANY WAY MEAN THAT ENGINEER IS GUARANTOR OF CONSTRUCTOR'S WORK, NOR RESPONSIBLE FOR THE COMPREHENSIVE OR SPECIAL INSPECTIONS, COORDINATION, SUPERVISION, OR SAFETY AT THE JOB SITE.

SPECIAL INSPECTION, OBSERVATIONS AND TESTING

1. SPECIAL INSPECTION (OWNER FURNISHED) IS REQUIRED IN ACCORDANCE WITH IBC SECTIONS 109 AND 1704 AS INDICATED IN THE STATEMENT OF SPECIAL INSPECTIONS PLAN ON DRAWINGS C-C2-Z-00007 THROUGH C-C2-Z-00009.
2. SPECIFIED CONCRETE TESTING DURING CONSTRUCTION WILL BE OWNER FURNISHED.
3. STRUCTURAL OBSERVATIONS (OWNER FURNISHED) IS REQUIRED IN ACCORDANCE WITH IBC SECTION 1710 AS INDICATED IN THE STATEMENT OF SPECIAL INSPECTION PLAN ON DRAWING C-C2-Z-00007.

FOUNDATIONS

1. REFER TO SALTSTONE DISPOSAL UNIT 6 GEOTECHNICAL INVESTIGATION REPORT BY XXXXXXXX, DATED MO. DATE, YEAR.
2. ALL FOUNDATION SLABS, SLABS-ON-GRADE AND WALL AND COLUMN FOUNDATIONS, UNLESS NOTED OTHERWISE, SHALL BEAR ON 6 INCHES OF COMPACTED GRANULAR FILL.
3. ALL FOUNDATION BEARING SURFACES SHALL BE OBSERVED BY A GEOTECHNICAL ENGINEER OR HIS DESIGNEE PRIOR TO PLACEMENT OF FORMING OR REINFORCING STEEL THE OBSERVATION SHALL VERIFY THAT THE ACTUAL EXPOSED SUBGRADE IS AS ANTICIPATED BY THE SITE SPECIFIC BORINGS, TEST PITS, TESTING AND DATA REPORTS.

FORMWORK, SHORING AND BRACING

1. STRUCTURES SHOWN ON THE DRAWINGS HAVE BEEN DESIGNED FOR STABILITY UNDER FINAL CONDITIONS ONLY. DESIGN SHOWN DOES NOT INCLUDE NECESSARY COMPONENTS OR EQUIPMENT FOR STABILITY OF THE STRUCTURES DURING CONSTRUCTION. CONTRACTOR IS RESPONSIBLE FOR ALL WORK RELATING TO CONSTRUCTION ERECTION METHODS, BRACING, SHORING, RIGGING, GUYS, SCAFFOLDING, FORMWORK, AND OTHER WORK AIDS REQUIRED TO SAFELY PERFORM THE WORK SHOWN.
2. TEMPORARY SHORING SHALL REMAIN IN PLACE UNTIL ELEVATED CONCRETE FLOOR OR SLABS HAVE REACHED 80 PERCENT OF THE 28 DAY DESIGN STRENGTH AS DETERMINED BY CYLINDER BREAKS.

CONCRETE REINFORCING

1. MINIMUM REINFORCING FOR ALL CONCRETE WALLS AND SLABS SHALL BE AS FOLLOWS:

WALL THICKNESS	REINF EACH WAY	LOCATION
6"	#4@12"	CENTERED
8"	#5@12"	CENTERED
10"	#4@12"	EACH FACE
12"	#5@12"	EACH FACE

PROVIDE LARGER SIZES AND MORE REINFORCING IN SECTIONS OF CONCRETE WHERE REQUIRED BY THE DETAILS ON THE DRAWINGS OR BY THE SPECIFICATIONS.

2. CLEARANCE FOR REINFORCEMENT BARS, UNLESS SHOWN OTHERWISE, SHALL BE:
   - WHEN PLACED ON GROUND: 3"
   - ALL OTHER CONCRETE SURFACES 2"
3. 90 DEGREE BENDS, UNLESS OTHERWISE SHOWN, SHALL BE ACI318 STANDARD HOOKS.
4. LOCATE SLAB TOP BAR SPLICES AT MIDSPAN AND BOTTOM BAR SPLICES AT SUPPORTS.
5. REINFORCEMENT BENDS AND LAPS, UNLESS OTHERWISE NOTED, SHALL SATISFY THE FOLLOWING MINIMUM REQUIREMENTS:

CONCRETE DESIGN STRENGTH = 5,000 PSI		GRADE 60 REINFORCING STEEL								
BAR SIZE		#3	#4	#5	#6	#7	#8	#9	#10	#11
LAP SPLICE LENGTH										
SPACING<6"	TOP BAR *	1'-6"	2'-5"	3'-6"	4'-8"	7'-4"	9'-0"	10'-2"	11'-5"	12'-8"
	OTHER BAR	1'-2"	1'-10"	2'-8"	3'-7"	5'-8"	6'-11"	7'-10"	8'-9"	9'-9"
SPACING≥6"	TOP BAR *	1'-1"	1'-6"	1'-10"	2'-2"	3'-2"	3'-7"	4'-6"	5'-6"	6'-7"
	OTHER BAR	1'-0"	1'-2"	1'-5"	1'-8"	2'-5"	2'-9"	3'-5"	4'-3"	5'-1"
EMBEDMENT LENGTH										
SPACING<6"	TOP BAR *	1'-2"	1'-10"	2'-8"	3'-7"	5'-8"	6'-11"	7'-10"	8'-9"	9'-9"
	OTHER BAR	1'-0"	1'-5"	2'-1"	2'-9"	4'-4"	5'-4"	6'-0"	6'-9"	7'-6"
SPACING≥6"	TOP BAR *	1'-0"	1'-2"	1'-5"	1'-8"	2'-5"	2'-9"	3'-5"	4'-3"	5'-1"
	OTHER BAR	1'-0"	1'-0"	1'-1"	1'-4"	1'-11"	2'-2"	2'-8"	3'-3"	3'-11"

* TOP BARS SHALL BE DEFINED AS ANY HORIZONTAL BARS PLACED SUCH THAT MORE THAN 12 INCHES OF CONCRETE IS CAST IN THE MEMBER BELOW THE BAR IN ANY SINGLE POUR. HORIZONTAL WALL BARS ARE CONSIDERED TOP BARS.

CONCRETE

1. 28-DAY CAST-IN-PLACE CONCRETE STRENGTHS:
   - TYPICAL: 5000 PSI
2. REINFORCING STEEL: ASTM A615, GRADE 60
3. FABRICATION AND PLACEMENT OF REINFORCING STEEL SHALL BE IN ACCORDANCE WITH CRSI MSP-1 "MANUAL OF STANDARD PRACTICE" AND ACI 301 "SPECIFICATIONS FOR STRUCTURAL CONCRETE".
4. CONTINUOUS WATERSTOP AS SPECIFIED SHALL BE INSTALLED IN ALL CONSTRUCTION JOINTS EXCEPT WHERE SPECIFICALLY NOTED OTHERWISE.
5. ADDITIONAL CONSTRUCTION JOINT LOCATIONS TO THOSE SHOWN, INCLUDING ADDITIONAL REQUIRED FOR CONSTRUCTION, SHALL BE SUBMITTED FOR REVIEW BY ENGINEER.
6. ROUGHEN AND CLEAN CONSTRUCTION JOINTS IN WALLS AND SLABS AS SPECIFIED PRIOR TO PLACING ADJACENT CONCRETE.
7. THE CONTRACTOR SHALL COORDINATE PLACEMENT OF OPENINGS, CURBS, DOWELS, SLEEVES, CONDUITS, BOLTS AND INSERTS PRIOR TO PLACEMENT OF CONCRETE.
8. NO ALUMINUM CONDUIT OR PRODUCTS CONTAINING ALUMINUM OR ANY OTHER MATERIAL INJURIOUS TO THE CONCRETE SHALL BE EMBEDDED IN THE CONCRETE.
9. CONDUIT SHALL NOT BE PLACED PARALLEL WITH BEAM OR COLUMN REINFORCEMENT UNLESS SPECFICALLY INDICATED IN DRAWINGS.

WELDING

1. WELDS SHALL CONFORM TO AMERICAN WELDING SOCIETY (AWS), LATEST EDITION:
   - D1.1, STRUCTURAL WELDING CODE - STEEL
   - D1.6, STRUCTURAL WELDING CODE - STAINLESS STEEL
2. REPAIR WELDS FOUND DEFECTIVE IN ACCORDANCE WITH AWS D1.1 SECTION 5.26.
3. USE INTERMITTENT WELDS AT FIELD WELDS OF EMBED PLATES AND ANGLES TO AVOID SPALLING OR CRACKING OF THE EXISTING CONCRETE.
4. BUTT JOINT WELDS SHALL BE COMPLETE JOINT PENETRATION (CJP) UNLESS INDICATED OTHERWISE.

STRUCTURAL STEEL AND METAL FABRICATIONS

1. STRUCTURAL STEEL SHALL CONFORM TO THE FOLLOWING:
   - W-SHAPES A992
   - MISCELLANEOUS SHAPES INCLUDING ANGLES, CHANNELS, PLATES, ETC. A36
   - SQUARE OR RECTANGULAR STEEL TUBING A500, GRADE B
   - STEEL PIPE A53, GRADE B
2. STRUCTURAL STEEL SHALL BE FABRICATED AND ERECTED IN CONFORMANCE WITH THE AISC STEEL CONSTRUCTION MANUAL, CURRENT EDITION, AND CURRENT OSHA STANDARDS.
3. BOLTS SHALL BE HIGH STRENGTH BOLTS CONFORMING TO THE FOLLOWING EXCEPT WHERE SPECIFICALLY INDICATED OTHERWISE:
   - UNLESS SHOWN OTHERWISE A325-N
   - ANCHOR BOLTS (AB)
     - STAINLESS STEEL F593, AISI TYPE 316, CONDITION CW
     - STEEL F1554, GR 36
     - GALVANIZED STEEL F1554, GR 36 / A153
   - MACHINE BOLTS (MB) A307
4. ITEMS TO BE EMBEDDED IN CONCRETE SHALL BE CLEAN AND FREE OF OIL, DIRT AND PAINT.
5. NO HOLES OTHER THAN THOSE SPECIFICALLY DETAILED SHALL BE ALLOWED THROUGH STRUCTURAL STEEL MEMBERS. NO CUTTING OR BURNING OF STRUCTURAL STEEL IS PERMITTED WITHOUT THE APPROVAL OF THE ENGINEER.

DEFERRED SUBMITTALS

1. DEFERRED SUBMITTALS ARE THOSE PORTIONS OF THE DESIGN WHICH ARE NOT SUBMITTED AT THE TIME OF PERMIT APPLICATION AND WHICH ARE TO BE SUBMITTED TO THE PERMITTING AGENCY FOR ACCEPTANCE PRIOR TO INSTALLATION OF THAT PORTION OF THE WORK.
2. THE FOLLOWING IS A LIST OF DEFERRED SUBMITTALS PER IBC SECTION 107.3.4.2 THAT ARE EXPECTED TO CONTAIN STRUCTURAL CALCULATIONS OR SAFETY RELATED SYSTEM INFORMATION FOR REVIEW TO MEET BUILDING PERMITTING REQUIREMENTS FOR DESIGNED SYSTEMS. PRIOR TO INSTALLATION OF THE INDICATED STRUCTURAL ELEMENT, EQUIPMENT, DISTRIBUTION SYSTEM, OR COMPONENT OR ITS ANCHORAGE, THE CONTRACTOR SHALL SUBMIT THE REQUIRED CALCULATIONS AND SUPPORTING DATA AND DRAWINGS FOR REVIEW AND ACCEPTANCE BY THE ENGINEER. ADDITIONALLY, ACCEPTANCE INDICATED ON THE ENGINEER'S COMMENT FORM, ALONG WITH THE COMPLETED, FINAL SUBMITTAL SHALL THEN BE FILED BY THE CONTRACTOR AND ACKNOWLEDGED AS ACCEPTED BY THE PERMITTING AGENCY PRIOR TO INSTALLATION OF THESE ITEMS.

SPECIFICATION SECTION	ITEM
01611	ANCHORAGE AND BRACING
02533	MANHOLES
03314	PRESTRESSED TANK VERTICAL POST-TENSIONING - RESERVOIR PRESTRESSING SUBCONTRACTOR CALCULATIONS INCLUDING HORIZONTAL PRESTRESSING AND VERTICAL POST-TENSION BAR ANCHORAGE
OTHER	ANY EQUIPMENT OR COMPONENT IN WHICH A TECHNICAL SPECIFICATION REQUIRES SUBMITTAL OF EQUIPMENT OR ANCHORAGE SYSTEM CALCULATIONS

PRELIMINARY ISSUED FOR INTERNAL REVIEW

C C2 Z 00005 — LATEST REVISION A

PROJ.	REV. NO.	REVISION	PRP'D	LEAD ENG	CHK'D/VERIF'D	APRV'D	APRV'D	APRV'D
SDU6	A	50% INFORMAL REVIEW	LT 01-31-12	[signature] 01-31-12				

THIS DRAWING HAS BEEN FURNISHED BY THE SAVANNAH RIVER SITE. THE INFORMATION AND KNOW HOW THEREON MAY NOT BE USED NOR THE DRAWING REPRODUCED WITHOUT WRITTEN PERMISSION OF THE PRIME CONTRACTOR. ALL REPRODUCTIONS IN WHOLE OR IN PART, INCLUDING VENDOR'S SHOP DRAWINGS, SHALL BEAR OR REFER TO THIS STAMP.

REFERENCE DRAWINGS

REFERENCE STANDARDS

UNITED STATES DEPARTMENT OF ENERGY

SAVANNAH RIVER SITE

BLDG NO.	SITE CLEARANCE NO.	DESIGN AREA NO.	DESIGN GROUP
451-6Z	N/A	Z451	CH2MHILL

TITLE: Z AREA
SALTSTONE DISPOSAL SITE
SDU 6
TANK DESIGN
GENERAL
GENERAL STRUCTURAL NOTES

SCALE	SRP DRAWING NO.	SHEET NO.	LATEST REVISION
1" = 1"	NA	1 OF 1	A

W.S. = 1 3 REF FILES YES NO
PSC= 1 PLOT DATE 01-31-12 TME
DRAWN BY (ORIGIN)RINA L-T DATE:
LAST CADD REV. BY:
Scale shown on this drawing is only applicable when plotted at 30"x42" (actual drawing size)

N/A

Attachment 3

STATEMENT OF SPECIAL INSPECTIONS

GENERAL NOTES

1. THE STATEMENT OF SPECIAL INSPECTIONS DRAWINGS PROVIDE PROJECT COMPLIANCE WITH THE PROVISIONS OF THE INTERNATIONAL BUILDING CODE (IBC) CHAPTER 17 FOR SPECIAL INSPECTION, STRUCTURAL OBSERVATION, AND TESTING FOR WIND AND SEISMIC RESISTANCE AS APPLICABLE. EXCEPT WHERE OTHERWISE NOTED, THIS INSPECTION IS OWNER FURNISHED.
2. STANDARD SPECIAL INSPECTION REQUIREMENTS FOR NONSTRUCTURAL COMPONENTS ARE CONTAINED IN TABLE 1.
3. STANDARD SPECIAL INSPECTION REQUIREMENTS FOR STRUCTURAL COMPONENTS, REGARDLESS OF WIND OR IBC SEISMIC DESIGN CATEGORIES, ARE CONTAINED IN TABLE 2. STANDARD TESTING REQUIREMENTS FOR STRUCTURAL COMPONENTS ARE CONTAINED IN TABLE 3.
4. PROJECT SPECIFIC REQUIREMENTS FOR STRUCTURES ASSIGNED TO IBC SEISMIC DESIGN CATEGORIES C, D, E, OR F ARE CONTAINED IN TABLE 4. ADDITIONAL TESTING REQUIREMENTS FOR STRUCTURAL RESISTANCE ARE CONTAINED IN TABLE 6.
5. PROJECT SPECIFIC REQUIREMENTS FOR STRUCTURES SUBJECT TO BASIC WIND SPEEDS IN EXCESS OF 100 MPH ARE CONTAINED IN TABLE 5.
6. FOR ADDITIONAL REQUIREMENTS, REFER TO SPECIFICATION SECTION 01451, SPECIAL INSPECTION, OBSERVATION AND TESTING. THESE INCLUDE:
   - A. CONTRACTOR'S REQUIREMENTS TO PROVIDE ACCESS TO THE WORK FOR REQUIRED INSPECTIONS, AND TO PROVIDE NOTICE OF REQUIRED INSPECTIONS AND STRUCTURAL OBSERVATION.
   - B. CONTRACTOR'S STATEMENT OF RESPONSIBILITY FOR WORK TO BE PERFORMED ON SYSTEMS DESIGNATED UNDER THE STATEMENT OF SPECIAL INSPECTIONS PLAN FOR WIND OR SEISMIC RESISTANCE.
   - C. DEFINITIONS AND TERMINOLOGY USED IN THIS STATEMENT OF SPECIAL INSPECTIONS.

SPECIAL INSPECTION

1. SPECIAL INSPECTION WILL BE IN ACCORDANCE WITH IBC SECTION 1704 TOGETHER WITH LOCAL AND STATE AMENDMENTS. REFER TO THE TABLES CONTAINED ON THESE GENERAL SHEETS FOR PROJECT SPECIFIC INSPECTION TYPES AND FREQUENCIES.
2. SPECIAL INSPECTIONS WILL BE PROVIDED BY A CERTIFIED OR QUALIFIED INSPECTOR AND ASSOCIATED TESTING WILL BE PERFORMED BY AN APPROVED ACCREDITED INDEPENDENT AGENCY. THE OWNER WILL SECURE AND PAY FOR THE SERVICES OF THE AGENCY TO PERFORM ALL SPECIAL INSPECTION AND ASSOCIATED TESTS. INSPECTORS FOR EACH SYSTEM AND MATERIAL WILL BE INTERNATIONAL CODE COUNCIL (ICC) CERTIFIED OR OTHERWISE APPROVED BY THE BUILDING OFFICIAL.
3. THE SPECIAL INSPECTOR WILL OBSERVE THE INDICATED WORK FOR COMPLIANCE WITH THE APPROVED CONTRACT DOCUMENTS AND SUBMIT RECORDS OF INSPECTION. ALL DISCREPANCIES WILL BE BROUGHT TO THE IMMEDIATE ATTENTION OF THE CONTRACTOR FOR CORRECTION.
4. SPECIAL INSPECTION AND ASSOCIATED TESTING REPORTS WILL BE SUBMITTED TO THE ENGINEER, CONTRACTOR, BUILDING OFFICAL, AND OWNER WITHIN ONE WEEK OF INSPECTION OR WITHIN ONE WEEK OF TEST COMPLETION. INSPECTIONS FOR WHICH REPORTING WILL BE REQUIRED ARE NOTED IN THE TABLES CONTAINED ON THIS STATEMENT OF SPECIAL INSPECTIONS.
5. AT THE CONCLUSION OF CONSTRUCTION, A FINAL REPORT DOCUMENTING REQUIRED SPECIAL INSPECTIONS AND CORRECTION OF PREVIOUSLY NOTED DISCREPANCIES WILL BE SUBMITTED.

SPECIAL INSPECTIONS FOR WIND RESISTANCE

1. SPECIAL INSPECTIONS REQUIREMENTS FOR WIND RESISTANCE IN ACCORDANCE WITH IBC SECTION 1705.4 ARE NOT APPLICABLE TO THIS PROJECT.PREVIOUSLY NOTED DISCREPANCIES WILL BE SUBMITTED.

SPECIAL INSPECTIONS FOR SEISMIC RESISTANCE

1. SPECIAL INSPECTIONS REQUIREMENTS FOR SEISMIC RESISTANCE WILL BE IN ACCORDANCE WITH IBC SECTION 1705.3 TOGETHER WITH LOCAL AND STATE AMENDMENTS.
2. SPECIAL INSPECTIONS REQUIREMENTS FOR SEISMIC RESISTANCE SHALL APPLY TO THE SYSTEMS AND COMPONENTS LISTED IN TABLE 4.
3. MAIN SYSTEMS REQUIRED TO BE COVERED UNDER PROJECT SPECIAL INSPECTION REQUIREMENTS INCLUDE THE FOLLOWING TOGETHER WITH THEIR CONNECTIONS. REFER TO SPECIFICATION 01451, SPECIAL INSPECTION, OBSERVATION AND TESTING.
   - A. SALTSTONE DISPOSAL UNIT 6 TANK STRUCTURE AND STAIR TOWER.

GEOTECHNICAL OBSERVATION

1. ALL FOUNDATION BEARING SURFACES SHALL BE INSPECTED UNDER THE SUPERVISION OF A REGISTERED GEOTECHNICAL ENGINEER PRIOR TO PLACEMENT OF FOUNDATION REINFORCING STEEL.
2. ADDITIONAL GEOTECHNICAL SPECIAL INSPECTION REQUIREMENTS ARE LISTED IN TABLE 1.
3. GEOTECHNICAL TESTING REQUIREMENTS ARE LISTED IN TABLE 3.

STRUCTURAL OBSERVATION

1. STRUCTURAL OBSERVATION WILL BE IN ACCORDANCE WITH IBC SECTION 1710 TOGETHER WITH LOCAL AND STATE AMENDMENTS. REFER TO PROJECT SPECIFIC NOTES ON THIS SHEET.
2. ONSITE STRUCTURAL OBSERVATION WILL BE PERFORMED FOR EACH IDENTIFIED SEISMIC FORCE-OR WIND FORCE-RESISTING SYSTEM, INCLUDING FOUNDATIONS AND CONNECTIONS. REFER TO THE GENERAL STRUCTURAL NOTES, DRAWING C-C2-z-00005 FOR THE BASIC SEISMIC- AND WIND-RESISTING SYSTEMS FOR THE STRUCTURES INCLUDED IN THE WORK.
3. STRUCTURAL OBSERVATION WILL BE PERFORMED BY A REGISTERED PROJECT DESIGN PROFESSIONAL FOR GENERAL CONFORMANCE TO THE APPROVED CONSTRUCTION DOCUMENTS. STRUCTURAL OBSERVATION DOES NOT INCLUDE OR WAIVE THE RESPONSIBILITY FOR ANY REQUIRED SPECIAL INSPECTIONS OR INSPECTIONS BY THE BUILDING OFFICIAL.
4. STRUCTURAL OBSERVATION REPORTS, NOTING ANY DEFICIENCIES IN OBSERVED CONSTRUCTION, WILL BE DELIVERED TO THE CONTRACTOR, BUILDING OFFICIAL, AND OWNER FOLLOWING EACH OBSERVATION. THE CONTRACTOR WILL BE NOTIFIED ON-SITE OR BY PHONE OR EMAIL WITHIN 24 HOURS UPON FINDING DEFICIENCIES.
5. AT THE CONCLUSION OF CONSTRUCTION, A WRITTEN STATEMENT WILL BE PROVIDED TO VERIFY THAT THE STRUCTURAL OBSERVATION SITE VISITS WERE MADE AND WHETHER THERE REMAIN ANY STRUCTURAL DEFICIENCIES THAT HAVE NOT BEEN RESOLVED.
6. STRUCTURAL OBSERVATION WILL INCLUDE VISUAL OBSERVATION OF THE STRUCTURAL SYSTEM AT SIGNIFICANT CONSTRUCTION STAGES AND AT COMPLETION OF THE STRUCTURAL SYSTEM FOR EACH STRUCTURE CONTAINED IN THE WORK. THE CONTRACTOR SHALL SCHEDULE AND FACILITATE STRUCTURAL OBSERVATION INCLUDING THE FOLLOWING:

	SYSTEM	STAGE	ITEMS	COMMENTS
1.	FOUNDATION SLAB OF TANK	PRIOR TO FIRST CONCRETE PLACEMENT OF FIRST SECTION WHEN ITEMS CAN STILL BE REVISED	REINFORCING STEEL, LATERAL CABLES, WATERSTOPS, EMBEDS, AND SIMILAR ITEMS	NOTE 1
2.	WALL TO FOUNDATION CONNECTIONS OF TANK PRIOR TO FORM CLOSURE	PRIOR TO FIRST CONCRETE PLACEMENT OF FIRST WALL SECTION WHEN ITEMS CAN BE REVISED		NOTE 1
3.	CONCRETE WALLS OF RESERVOIR STRUCTURE	PRIOR TO FIRST CONCRETE PLACEMENT OF FIRST SECTION WHEN ITEMS CAN STILL BE REVISED	REINFORCING STEEL, LATERAL CABLES, WATERSTOPS, POST-TENSIONING UNITS AND DUCTS, EMBEDS, AND SIMILAR ITEMS	NOTE 1
4.	VERTICAL THREAD BAR TENSIONING	AT BEGINNING OF POST-TENSIONING OPERATION		NOTE 1
5.	TANK INITIAL CIRCUMFERENTIAL PRESTRESSING OPERATIONS INCLUDING PREPARED TANK WALL SURFACES	AT BEGINNING OF STRAND APPLICATION		NOTE 1
6.	TANK ELEVATED CONCRETE SLAB PRIOR TO CONCRETE PLACEMENT	PRIOR TO FIRST CONCRETE PLACEMENT OF FIRST SECTION WHEN ITEMS CAN STILL BE REVISED		NOTE 1
7.	STEEL FRAME JOINTS	AT END OF FRAMING INSTALLATION		NOTE 1
8.	AT END OF STRUCTURAL WORK OF EACH ITEM, OR IF VISIBLE, AT END OF ALL STRUCTURAL WORK FOR DETERMINATION OF FINAL CONDITION OF STRUCTURE			NOTE 1

NOTES:
1. STRUCTURAL OBSERVER TO DISCUSS ITEMS AND SITE SPECIFIC CONDITIONS WITH SPECIAL INSPECTOR AND FIELD INSPECTION STAFF DURING OBSERVATION.

TABLE 1
REQUIRED NON-STRUCTURAL SPECIAL INSPECTION
REFER TO SPECIFICATION SECTION 01451

SYSTEM OR MATERIAL	2009 IBC CODE REFERENCE	REFERENCED STANDARD	PERIODIC OWNER FURNISHED SPECIAL INSPECTION (SEE NOTE 1)	CONTINUOUS OWNER FURNISHED SPECIAL INSPECTION	REQUIRED REPORTING BY SPECIAL INSPECTOR TO DESIGNATED DISTRIBUTION LIST	COMMENTS	TESTING FOR SPECIAL INSPECTION
GEOTECHNICAL							
1. SOILS:							
A. VERIFY MATERIALS BELOW SHALLOW FOUNDATIONS ARE ADEQUATE TO ACHIEVE THE DESIGN BEARING CAPACITY	1704.7, 1803.5, 1803.6	SECTION 02319, SUBGRADE PREPARATION	X		X	PROFESSIONAL OBSERVATION BY GEOTECHNICAL ENGINEER	
B. VERIFY EXCAVATIONS ARE EXTENDED TO PROPER DEPTH AND HAVE REACHED PROPER MATERIAL	1704.7		X		X	PROFESSIONAL OBSERVATION BY GEOTECHNICAL ENGINEER	
C. PERFORM CLASSIFICATION AND TESTING OF CONTROLLED FILL MATERIALS	1704.7	SECTION 02316, FILL AND BACKFILL	X		X		SEE TABLE 3 FOR GRADATION TEST REQUIREMENTS
D.VERIFY USE OF PROPER MATERIALS, DENSITIES, AND LIFT THICKNESSES DURING PLACEMENT AND COMPACTION OF COMPACTED FILL	1704.7	SECTION 02316, FILL AND BACKFILL		X	X		SEE TABLE 3 FOR DENSITY TEST REQUIREMENTS
E. PRIOR TO PLACEMENT OF COMPACTED FILL, OBSERVE SUBGRADE AND VERIFY THAT SITE HAS BEEN PREPARED PROPERLY	1704.7	SECTION 02319, SUBGRADE PREPARATION	X		X	PROFESSIONAL OBSERVATION BY GEOTECHNICAL ENGINEER	SEE TABLE 3 FOR DENSITY TEST REQUIREMENTS
GENERAL							
1. INSTALLATION OF MATERIALS THAT REQUIRE ADDITIONAL MANUFACTURER'S INSTRUCTIONS BEYOND CODE REQUIREMENTS	1703.4.2, 1704.15 ITEM 3	ICC-ES EVALUATION REPORTS		X	X		
STRUCTURAL							
SEE TABLE 2.							

NOTES:
1. PERIODIC INSPECTION IS DEFINED AS INSPECTION BY THE SPECIAL INSPECTOR OF ALL MATERIALS AND SYSTEMS, IN SOME CASES PERFORMED DURING THEIR PLACEMENT AND IN ALL CASES PERFORMED UPON COMPLETION OF THEIR PLACEMENT. THE COMPLETION INSPECTION SHALL BE PERFORMED SO THAT WORK CAN BE CORRECTED PRIOR TO OTHER RELATED WORK PROCEEDING

PRELIMINARY ISSUED FOR INTERNAL REVIEW

C C2 Z 00007 LATEST REVISION A

PROJ.	REV. NO.	REVISION	PRP'D	LEAD ENG	CHK'D/VERIF'D	APRV'D	APRV'D	APRV'D
		50% INFORMAL REVIEW	LT 01-31-12	01-31-12				

THIS DRAWING HAS BEEN FURNISHED BY THE SAVANNAH RIVER SITE. THE INFORMATION AND KNOW HOW THEREON MAY NOT BE USED NOR THE DRAWING REPRODUCED WITHOUT WRITTEN PERMISSION OF THE PRIME CONTRACTOR. ALL REPRODUCTIONS IN WHOLE OR IN PART, INCLUDING VENDOR'S SHOP DRAWINGS, SHALL BEAR OR REFER TO THIS STAMP.

REFERENCE DRAWINGS

REFERENCE STANDARDS

UNITED STATES DEPARTMENT OF ENERGY
SAVANNAH RIVER SITE

BLDG. NO.	SITE CLEARANCE NO.	DESIGN AREA NO.	DESIGN GROUP
451-6Z	N/A	Z451	CH2MHILL

TITLE: Z AREA
SALTSTONE DISPOSAL SITE
SDU 6
TANK DESIGN
GENERAL
STATEMENT OF SPECIAL INSPECTIONS
SHEET 1 OF 3

SCALE	SHP DRAWING NO.	SHEET NO.	LATEST REVISION
1"= 1"	NA	1 OF 1	A

Scale shown on this drawing is only applicable when plotted at 30"x42" (actual drawing size)

W.S. = [ ] - REF FILES YES NO LEVELS PSC= 1

N/A

Attachment 3

TABLE 2
REQUIRED STRUCTURAL SPECIAL INSPECTION
REFER TO SPECIFICATION SECTION 01451

SYSTEM	2009 IBC CODE REFERENCE	REFERENCED STANDARD	PERIODIC OWNER FURNISHED SPECIAL INSPECTION (SEE NOTE 1)	CONTINUOUS OWNER FURNISHED SPECIAL INSPECTION	REQUIRED REPORTING BY SPECIAL INSPECTOR TO DESIGNATED DISTRIBUTION LIST	COMMENTS	TESTING FOR SPECIAL INSPECTION
CONCRETE							
1. INSPECTION OF REINFORCING STEEL, INCLUDING PRESTRESSING STEEL, AND PLACEMENT	1704.4, 1903.1, 1907.1, 1907.7, 1913.4	ACI 318: 3.5, 7.1-7.7	X		X		
2. INSPECT BOLTS TO BE INSTALLED IN CONCRETE PRIOR TO AND DURING PLACEMENT OF CONCRETE	1704.4	ACI 318: 8.1.3, 21.1.8		X	X		
3. INSPECTION OF ANCHORS INSTALLED IN HARDENED CONCRETE	1912.1	ACI 318: 3.8.6, 8.1.3, 21.1.8	X		X		
4. VERIFY USE OF REQUIRED DESIGN MIX	1704.4, 1904.2.2, 1905.2, 1913.2, 1913.3	ACI 318: Ch. 4, 5.2-5.4	X		X		
5. AT THE TIME FRESH CONCRETE IS SAMPLED TO FABRICATE SPECIMENS FOR STRENGTH TESTS, PERFORM SLUMP AND AIR CONTENT TESTS, AND DETERMINE THE TEMPERATURE OF THE CONCRETE	1704.4, 1905.6, 1913.10	ASTM C 172, ASTM C 31, ACI 318: 5.6, 5.8		X	X		SEE TABLE 3 FOR CONCRETE TEST REQUIREMENTS
6. INSPECTION OF CONCRETE AND SHOTCRETE PLACEMENT FOR PROPER APPLICATION TECHNIQUES	1704.4, 1905.9, 1905.10, 1913.5, 1913.7, 1913.8	ACI 318: 5.9, 5.10		X	X		
7. INSPECTION FOR MAINTENANCE OF SPECIFIED CURING TEMPERATURE AND TECHNIQUES	1704.4, 1905.11-1905.13, 1913.9	ACI 318: 5.11-5.13	X		X		
8. INSPECTION OF PRESTRESSED CONCRETE:							
A. APPLICATION OF PRESTRESSING FORCES	1704.4	ACI 318: 18.20		X	X		
B. GROUTING OF PRESTRESSING DUCTS	1704.4	ACI 318: 18.18.4		X	X		
9. VERIFICATION OF IN-SITU CONCRETE STRENGTH, PRIOR TO STRESSING OF TENDONS IN POST-TENSIONED CONCRETE AND PRIOR TO REMOVAL OF SHORING AND FORMS FROM STRUCTURAL SLABS	1704.4, 1908.2	ACI 318: 6.2	X		X		
10. INSPECT FORMWORK FOR SHAPE, LOCATION AND DIMENSIONS OF THE CONCRETE MEMBER BEING FORMED	1704.4, 1908.1	ACI 318: 6.1.1	X		X		

TABLE 2 CONTINUED
REQUIRED STRUCTURAL SPECIAL INSPECTION
REFER TO SPECIFICATION SECTION 01451

SYSTEM	2009 IBC CODE REFERENCE	REFERENCED STANDARD	PERIODIC OWNER FURNISHED SPECIAL INSPECTION (SEE NOTE 1)	CONTINUOUS OWNER FURNISHED SPECIAL INSPECTION	REQUIRED REPORTING BY SPECIAL INSPECTOR TO DESIGNATED DISTRIBUTION LIST	COMMENTS	TESTING FOR SPECIAL INSPECTION
STEEL							
1. MATERIAL VERIFICATION OF HIGH-STRENGTH BOLTS, NUTS, AND WASHERS:							
A. IDENTIFICATION MARKINGS TO CONFORM TO ASTM STANDARDS SPECIFIED IN THE APPROVED CONSTRUCTION DOCUMENTS	1704.3	Applicable ASTM Material Specifications; AISC 360: Sec. A3.3	X		X		
B. MANUFACTURER'S CERTIFICATE OF COMPLIANCE REQUIRED	1704.3		X		X		
2. INSPECTION OF HIGH-STRENGTH BOLTING:							
A. SNUG-TIGHT JOINTS	1704.3.3	AISC 360: Sec. M2.5	X		X		
3. MATERIAL VERIFICATION OF STRUCTURAL STEEL:							
A. FOR STRUCTURAL STEEL, IDENTIFICATION MARKINGS TO CONFORM TO AISC 360	1704.3, 1708.3, 2203.1	AISC 360: Sec. M3.5	X		X		
B. FOR OTHER STEEL, IDENTIFICATION MARKINGS TO CONFORM TO ASTM STANDARDS SPECIFIED IN THE APPROVED CONSTRUCTION DOCUMENTS	1704.3, 1708.3, 2203.1	APPLICABLE ASTM MATERIAL STANDARDS	X		X		
C. MANUFACTURER'S CERTIFIED TEST REPORTS	1704.3		X				
4. MATERIAL VERIFICATION OF WELD FILLER MATERIALS:							
A. IDENTIFICATION MARKINGS CONFORM TO AWS SPECIFICATIONS IN THE APPROVED CONSTRUCTION DOCUMENTS	1704.3	AISC 360: Sec. A3.5 AND APPLICABLE AWS A5 DOCUMENTS	X		X		
B. MANUFACTURERS CERTIFICATES OF COMPLIANCE REQUIRED	1704.3		X		X		
5.A. INSPECTION OF WELDING, STRUCTURAL STEEL:							
1. COMPLETE AND PARTIAL PENETRATION GROOVE WELDS	1704.3.1	AWS D1.1		X	X		
2. MULTI-PASS FILLET WELDS	1704.3.1	AWS D1.1		X	X		
3. SINGLE-PASS FILLET WELDS > 5/16"	1704.3.1	AWS D1.1		X	X		
4. SINGLE-PASS FILLET WELDS <= 5/16"	1704.3.1	AWS D1.1	X		X		
6. INSPECTION OF STEEL FRAME JOINT DETAILS FOR COMPLIANCE:							
A. DETAILS SUCH AS BRACING AND STIFFENING	1704.3.2		X		X		
B. MEMBER LOCATIONS	1704.3.2		X		X		
C. APPLICATION OF JOINT DETAILS AT EACH CONNECTION	1704.3.2		X		X		

NOTES:
1. PERIODIC INSPECTION IS DEFINED AS INSPECTION BY THE SPECIAL INSPECTOR OF ALL MATERIALS AND SYSTEMS. IN SOME CASES PERFORMED DURING THEIR PLACEMENT AND IN ALL CASES PERFORMED UPON COMPLETION OF THEIR PLACEMENT. THE COMPLETION INSPECTION SHALL BE PERFORMED SO THAT WORK CAN BE CORRECTED PRIOR TO OTHER RELATED WORK PROCEEDING

PRELIMINARY ISSUED FOR INTERNAL REVIEW

C | C2 | Z | 00008 | LATEST REVISION A

PROJ.	REV. NO.	REVISION	INITIAL AND DATE: PREP'D	LEAD ENG	CHKD/VERIF'D	APRV'D	APRV'D	APRV'D
		50% INFORMAL REVIEW	KT 01-31-12	01-31-12				

THIS DRAWING HAS BEEN FURNISHED BY THE SAVANNAH RIVER SITE. THE INFORMATION AND IDEAS HERE THEREON MAY NOT BE USED NOR THE DRAWING REPRODUCED WITHOUT WRITTEN PERMISSION OF THE PRIME CONTRACTOR. ALL REPRODUCTIONS IN WHOLE OR IN PART, INCLUDING VENDOR'S SHOP DRAWINGS, SHALL BEAR OR REFER TO THIS STAMP.

REFERENCE DRAWINGS

REFERENCE STANDARDS

UNITED STATES DEPARTMENT OF ENERGY
SAVANNAH RIVER SITE

BLDG. NO. 451-6Z | SITE CLEARANCE NO. N/A | DESIGN AREA NO. Z451 | DESIGN GROUP CH2MHILL

TITLE
Z AREA
SALTSTONE DISPOSAL SITE
SDU 6
TANK DESIGN
GENERAL
STATEMENT OF SPECIAL INSPECTIONS
SHEET 2 OF 3

SCALE 1"= 1" | SHP DRAWING NO. NA | SHEET NO. 1 OF 1 | LATEST REVISION A

Scale shown on this drawing is only applicable when plotted on 30"x42" factual drawing size!

W.S. ( ) - REF FILES YES NO

LEVELS 1234567890123456789012345678901234567890123456789012345678901234567890123 PSC- 1

Tek 1 on 06/16/07

N/A

Attachment 3

TABLE 3
TESTING FOR REQUIRED SPECIAL INSPECTION
REFER TO SPECIFICATION SECTION 01451

MATERIAL	TYPE OR SCOPE	STANDARD	2009 IBC CODE REFERENCE	FREQUENCY	BY WHOM	REQUIRED REPORTING TO DESIGNATED DISTRIBUTION LIST	COMMENTS
GEOTECHNICAL							
CONTROLLED FILL	GRADATION	ASTM D422	1704.7	SECTION 02316, FILL AND BACKFILL	OWNERS APPROVED TESTING AGENCY	X	
CONTROLLED FILL	COMPACTION	ASTM D698	1704.7	SECTION 02316, FILL AND BACKFILL	OWNERS APPROVED TESTING AGENCY	X	
CONTROLLED FILL	RELATIVE COMPACTION	ASTM D1556, D2922	1704.7	SECTION 02316, FILL AND BACKFILL			
CONTROLLED FILL	PROOF ROLLING		1704.7	SECTION 02316, FILL AND BACKFILL			
PREPARED SUBGRADE	RELATIVE COMPACTION	ASTM D1556, D2922	1704.7	SECTION 02319, SUBGRADE PREPARATION	OWNERS APPROVED TESTING AGENCY	X	
PREPARED SUBGRADE	PROOF ROLLING		1704.7	SECTION 02319, SUBGRADE PREPARATION	OWNERS APPROVED TESTING AGENCY	X	
CONCRETE							
CONCRETE	STRENGTH	ASTM C39	1704.4, 1905.8	ONCE EACH DAY, BUT NOT LESS THAN ONE SAMPLE FOR EACH 150 CUBIC YARDS OR 5,000 SFT OF WALLS OR SLABS PLACED	OWNERS TESTING AGENCY	X	
SHOTCRETE	STRENGTH	ASTM C42	1704.4, 1913.10	ONCE EACH SHIFT, BUT NOT LESS THAN ONE SAMPLE FOR EACH 50 CUBIC YARDS PLACED	OWNERS TESTING AGENCY	X	
CONCRETE	SLUMP	ASTM C143, C94	1704.4	ONE SAMPLE PER STRENGTH TEST	OWNERS TESTING AGENCY	X	
CONCRETE	AIR CONTENT	ASTM C231, C94	1704.4	ONE SAMPLE PER STRENGTH TEST	OWNERS TESTING AGENCY	X	
CONCRETE	TEMPERATURE	ASTM C1064	1704.4	ONE SAMPLE PER STRENGTH TEST	OWNERS TESTING AGENCY	X	
STEEL							
STEEL STUD WELDING	PREPRODUCTION TESTING	AWS D1.1 Sec. 7.7.1	1704.3	PRIOR TO CONSTRUCTION FOR EACH SIZE AND TYPE AND FIRST 2 STUDS EACH SHIFT	CONTRACTOR	X	SPECIAL INSPECTOR SHALL MONITOR PROCEDURES AND RESULTS OF BEND TESTING
STRUCTURAL STEEL	ULTRASONIC OR RADIOGRAPHIC NONDESTRUCTIVE TESTING	AWS D1.1	1704.3.1	SECTION 05 05 23, WELDING	CONTRACTOR'S APPROVED TESTING AGENCY	X	SPECIAL INSPECTOR SHALL MONITOR PROCEDURES AND RESULTS OF TESTING PERFORMED ON GROOVE AND BUTT JOINT WELDS

TABLE 4
REQUIRED SPECIAL INSPECTION FOR SEISMIC RESISTANCE FOR STRUCTURAL SYSTEMS
REFER TO TABLE 2 FOR STANDARD STRUCTURAL SPECIAL INSPECTION REQUIREMENTS

The IBC Seismic Design Category (SDC) for this Project is D.

SYSTEM	2009 IBC CODE REFERENCE	STANDARD OR CODE	PERIODIC OWNER FURNISHED SPECIAL INSPECTION (SEE NOTE 1)	CONTINUOUS OWNER FURNISHED SPECIAL INSPECTION	REQUIRED REPORTING BY SPECIAL INSPECTOR TO DESIGNATED DISTRIBUTION LIST	COMMENTS FOR DETAILS, REFER TO SPECIFICATION SECTION 01451	TESTING FOR SPECIAL INSPECTION
STRUCTURAL							
SEISMIC-FORCE-RESISTING SYSTEMS	1707.1 ITEM 1			X	X		
STRUCTURAL STEEL WELDING IN SEISMIC FORCE-RESISTING SYSTEMS EXCEPT FOR SINGLE PASS FILLET WELDS ≤ 5/16"	1707.2	AISC 341		X	X		SEE TABLE 6 FOR NONDESTRUCTIVE TESTING OF WELDS

NOTES:
1. PERIODIC INSPECTION IS DEFINED AS INSPECTION BY THE SPECIAL INSPECTOR OF ALL MATERIALS AND SYSTEMS. IN SOME CASES PERFORMED DURING THEIR PLACEMENT AND IN ALL CASES PERFORMED UPON COMPLETION OF THEIR PLACEMENT. THE COMPLETION INSPECTION SHALL BE PERFORMED SO THAT WORK CAN BE CORRECTED PRIOR TO OTHER RELATED WORK PROCEEDING AND COVERING THE INSPECTED WORK

TABLE 5
REQUIRED SPECIAL INSPECTION FOR WIND RESISTANCE FOR STRUCTURAL SYSTEMS

The 3-second-gust Basic Wind Speed for this Project is 100 mph.
The Wind Exposure is Category C.

SYSTEM	2009 IBC CODE REFERENCE	STANDARD OR CODE	PERIODIC OWNER FURNISHED SPECIAL INSPECTION (SEE NOTE 1)	CONTINUOUS OWNER FURNISHED SPECIAL INSPECTION	REQUIRED REPORTING BY SPECIAL INSPECTOR TO DESIGNATED DISTRIBUTION LIST	COMMENTS FOR DETAILS, REFER TO SPECIFICATION SECTION 01451
NOT APPLICABLE TO THIS PROJECT						

TABLE 6
TESTING FOR SEISMIC RESISTANCE
REFER TO SPECIFICATION SECTION 01451

MATERIAL	TYPE OR SCOPE	STANDARD	2009 IBC CODE REFERENCE	FREQUENCY	BY WHOM	REQUIRED REPORTING TO DESIGNATED DISTRIBUTION LIST	COMMENTS
STEEL							
COMPLETE AND PARTIAL PENETRATION GROOVE WELDS	NONDESTRUCTIVE TESTING	AISC 341 AWS D1.1	1706.3	CONTINUOUS	SPECIAL INSPECTOR	X	
MULTI-PASS FILLET WELDS	NONDESTRUCTIVE TESTING	AISC 341 AWS D1.1	1706.3	CONTINUOUS	SPECIAL INSPECTOR	X	
SINGLE-PASS FILLET WELDS > 5/16"	NONDESTRUCTIVE TESTING	AISC 341 AWS D1.1	1706.3	CONTINUOUS	SPECIAL INSPECTOR	X	

PRELIMINARY ISSUED FOR INTERNAL REVIEW

C | C2 | Z | 00009 | LATEST REVISION A

PROJ.	REV. NO.	REVISION	INITIAL AND DATE: PRP'D	LEAD ENG	CHKD/VERIF'D	APRV'D	APRV'D	APRV'D

PROJ.	REV. NO.	REVISION	INITIAL AND DATE: PRP'D	LEAD ENG	CHKD/VERIF'D	APRV'D	APRV'D	APRV'D
		50% INFORMAL REVIEW	ILT 01-31-12	01-31-12				

THIS DRAWING HAS BEEN FURNISHED BY THE SAVANNAH RIVER SITE. THE INFORMATION AND IDEAS HERE-IN MAY NOT BE USED NOR THE DRAWING REPRODUCED WITHOUT WRITTEN PERMISSION OF THE PRIME CONTRACTOR. ALL REPRODUCTIONS IN WHOLE OR IN PART, INCLUDING VENDORS SHOP DRAWINGS, SHALL BEAR OR REFER TO THIS STAMP.

REFERENCE DRAWINGS

REFERENCE STANDARDS

W.S.* ℄ REF FILES YES NO LEVELS PSG- 1

UNITED STATES DEPARTMENT OF ENERGY
SAVANNAH RIVER SITE

BLDG NO.	SITE CLEARANCE NO.	DESIGN AREA NO.	DESIGN GROUP
451-6Z	N/A	2451	CH2MHILL

TITLE
Z AREA
SALTSTONE DISPOSAL SITE
SDU 6
TANK DESIGN
GENERAL
STATEMENT OF SPECIAL INSPECTIONS
SHEET 3 OF 3

SCALE	SRP DRAWING NO.	SHEET NO.	LATEST REVISION
1"= 1"	NA	1 OF 1	A

Scale shown on this drawing is only applicable when plotted at 30"x42" (actual drawing size)

Attachment 3

N/A

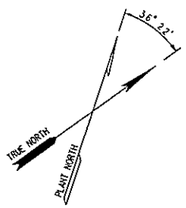

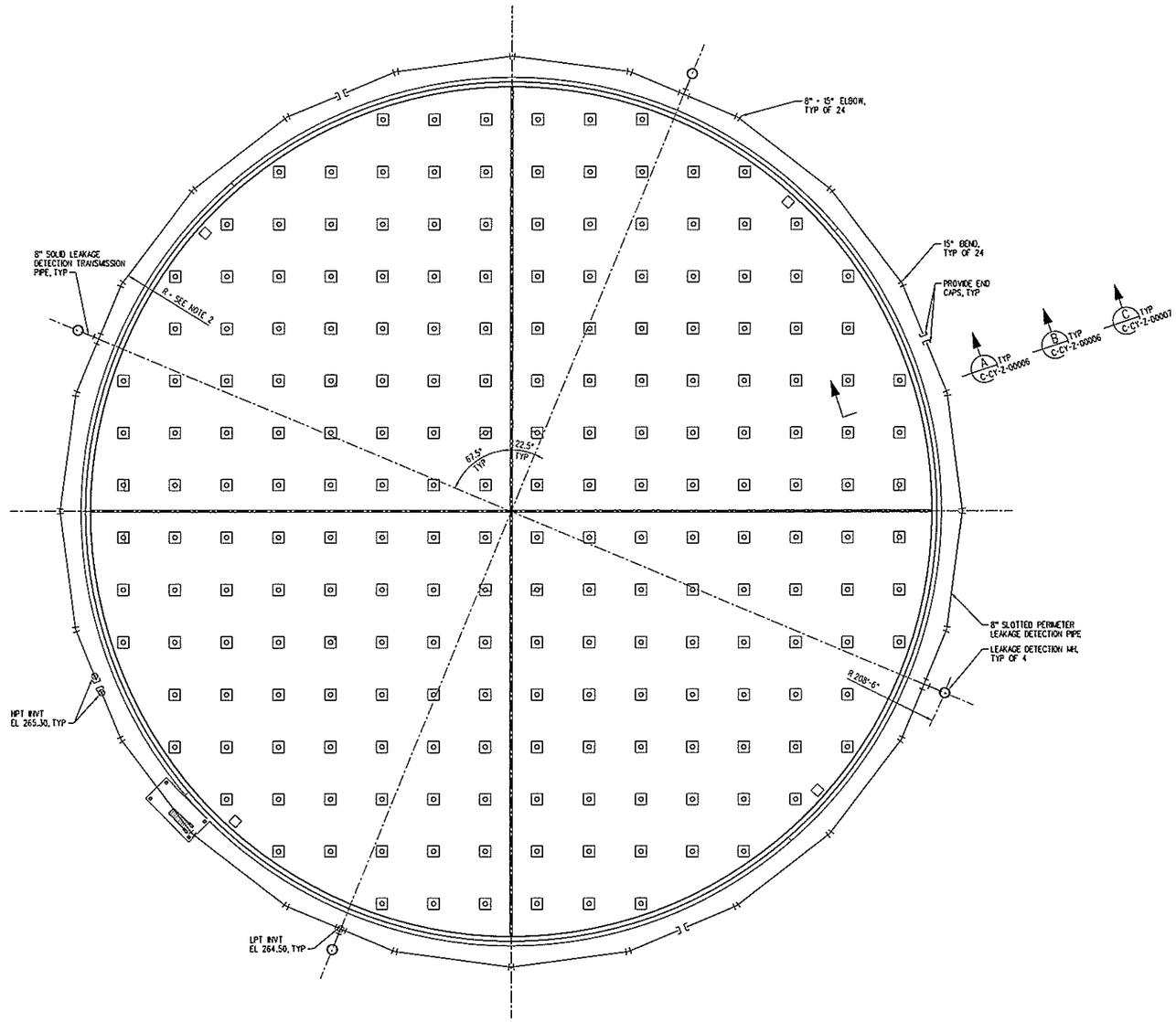

LEAKAGE DETECTION PLAN

NOTES

1. FABRICATE PERIMETER LEAKAGE DETECTION PIPE USING STRAIGHT SECTIONS WITH BENDS PLACED AT RADIUS.
2. TRANSITION DISTANCE FROM TANK CENTER TO PERIMTER PIPE CENTERLINE FROM 197.00 TO 199.00 FEET AT SLOPED RUN OF PIPE.

LEGEND

PRELIMINARY ISSUED FOR INTERNAL REVIEW

C CY Z 00005 LATEST REVISION A

PROJ.	REV. NO.	REVISION	INITIAL AND DATE PREP'D	LEAD ENG	CHKD/VERIF'D	APRV'D	APRV'D	APRV'D
SDU6	A	SDU INFORMAL REVIEW	LT 01-31-12	[illegible] 01-31-12				

REFERENCE DRAWINGS

REFERENCE STANDARDS

THIS DRAWING HAS BEEN FURNISHED BY THE SAVANNAH RIVER SITE. DISCLOSURE OF THIS DRAWING OR ITS CONTENTS TO OTHERS THAN THE SAVANNAH RIVER SITE OR ITS SUBCONTRACTORS WITHOUT WRITTEN PERMISSION IS PROHIBITED. ALL REPRODUCTIONS IN WHOLE OR IN PART, INCLUDING VENDORS, SHOP DRAWINGS, SHALL BEAR OR REFER TO THIS STAMP.

UNITED STATES DEPARTMENT OF ENERGY

SAVANNAH RIVER SITE

BLDG NO.	SITE CLEARANCE NO.	DESIGN AREA NO.	DESIGN GROUP
451-62	N/A	2451	CH2MHILL

TITLE

Z AREA
SALTSTONE DISPOSAL SITE
SDU 6
TANK DESIGN
CIVIL
LEAKAGE DETECTION PLAN

SCALE	SHP DRAWING NO.	SHEET NO.	LATEST REVISION
3/64" = 1'-0"	NA	1 OF 1	A

Scale shown on this drawing is only applicable when plotted at 30"x42" (ANSI D) drawing size

W.S. = C ? . REF FILES YES NO

LEVELS 1234567890123456789012345678901234567890123456789012345678901234567890123

PSD= 1 PLOT DATE 01-31-12 TIME DRAWN BY NORGIN-ANNA L-1 DATE: LAST CADD REV. BY:

Attachment 3

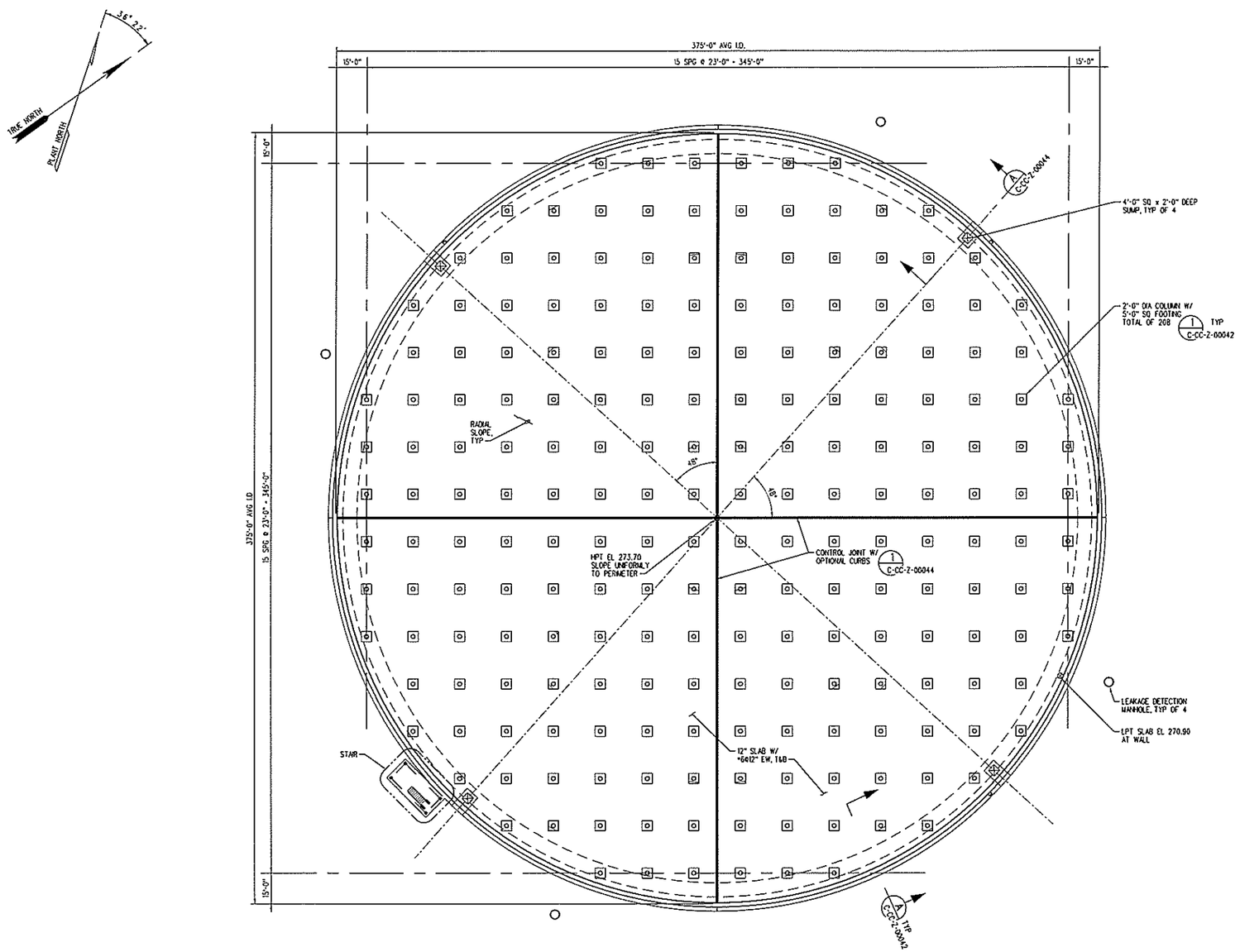

FOUNDATION PLAN

NOTES

GENERAL NOTES:

1. FOR GENERAL STRUCTURAL NOTES SEE DRAWINGS C-CC-Z-00005 AND C-CC-Z-00006.

BOTTOM SLAB:

1. PREPARE CONCRETE MUD MATS, GEOSYNTHETIC CLAY LINER, HDPE LINER, DRAIN SAND, GRANULAR FILL, AND SUBGRADE MATERIALS AND CONSTRUCT LEAKAGE DETECTION SYSTEM AS REQUIRED BY SPECIFICATION, AND AS SHOWN ON DRAWINGS C-CY-Z-00005 THRU C-CY-Z-00007.
2. BOTTOM SLAB SHALL BEAR ON COMPACTED GRANULAR FILL, GEOTEXTILE, AND DRAIN SAND OF LEAKAGE DETECTION SYSTEM.
3. MINIMUM COMPACTION OF BACKFILL AROUND TANK BASE SHALL BE AS SPECIFIED. USE ONLY HAND HELD EQUIPMENT WITHIN 5'-0" OF THE WALL.
4. DIMENSIONS FOR MATERIALS AT WALL BASE JOINT REQUIRE VERY CLOSE TOLERANCES IN LOCATING CENTERLINE OF WATERSTOP AND LATERAL CABLES PRIOR TO AND DURING CONCRETE PLACEMENT OF BASE SLAB.
5. CAST BASE SLAB IN 4 SEPARATE POURS WITH JOINTS BETWEEN AND WITH 7 DAYS MINIMUM TIME BETWEEN POURS.
6. FOR CONCRETE PLACEMENT SEQUENCE AT WATERSTOP AND CONSTRUCTION JOINTS, SEE DETAIL 4 / C-CC-Z-00044
7. SLAB TRANSVERSE REINFORCING SHALL BE ORIENTED PARALLEL AND PERPENDICULAR TO GRID LINES UNLESS OTHERWISE NOTED. LAP TOP REINFORCING ON INTERSECTING GRID LINES AND BOTTOM REINFORCING CENTERED BETWEEN GRID LINES.

CORE WALL:

1. SUPPORT VERTICAL WALL REINFORCING ON HARD PLASTIC OR STAINLESS STEEL PLATE SUPPORTS. VERTICALS ARE NOT TO REST DIRECTLY ON THE BOTTOM RUBBER PADS.
2. PRIOR TO CASTING CONCRETE IN WALL, WATER TEST THE VERTICAL BAR DUCT UNITS OR CLOSELY INSPECT THE UNITS FOR CRACKS. SEAL OR REPAIR ALL CRACKS OR DAMAGE PRIOR TO CASTING CONCRETE IN WALL.
3. PROVIDE POSITIVE FORM SUPPORTS AT BASE OF WALL TO PREVENT SPREADING OF FORMS, SO THAT CONCRETE WILL NOT PENETRATE BELOW TOP OF NEOPRENE PADS. FORM SUPPORTS SHALL NOT RESTRICT WALL BASE JOINT MOVEMENT AND CLEARANCES FOR REINFORCING BARS SHALL BE MAINTAINED PER DRAWING C-CZ-Z-00005.
4. THE CONTRACTOR SHALL COMPLETE THE VERTICAL POST-TENSIONING PRIOR TO THE HORIZONTAL PRESTRESSING OF THE WALL. THE ROOF SLAB SECTIONS SHALL NOT BE POURED UNTIL THE GROUT FOR THE POST-TENSIONING BLOCKOUTS HAS BEEN PLACED.
5. FORMWORK TOLERANCES SHALL CONFORM TO ACI347, STANDARD PRACTICE FOR CONCRETE WORK. IN NO CASE SHALL THE FINISHED CONCRETE CORE WALL BE OUT OF ROUND OR OUT OF PLUMB BY MORE THAN 3/8" +/-. FLAT FORM PANELS IF USED SHALL NOT EXCEED 3 FEET IN WIDTH.
6. CAST CORE WALLS IN 25 WALL SEGMENTS WITH 2 DAY MINIMUM BETWEEN ADJACENT POURS.

MISCELLANEOUS:

1. REFER TO SPECIFICATION 03255, CONCRETE WALL BASE AND TOP JOINTS, FOR SPECIFIED TOLERANCE FOR PLACING 12" X 3/8" PLASTIC WATERSTOP AT BASE OF WALL.
2. REFER TO SECTION 03300, CAST-IN-PLACE CONCRETE, FOR EXPERIENCE REQUIREMENTS AND SPECIAL FORMING REQUIREMENTS FOR THE CONCRETE CORE WALL CONSTRUCTION.
3. PERMANENTLY MARK POST-TENSIONING BAR LOCATIONS ON TOP OF OUTSIDE BASE SLAB.
4. PERFORM LIQUID TIGHTNESS TEST PRIOR TO MAKING HDPE LINER CONNECTION TO THE WALL FOUNDATION AND BRINGING BACKFILL TO FINISH GRADE.

LEGEND

PRELIMINARY ISSUED FOR INTERNAL REVIEW

C CC Z 00039 — LATEST REVISION A

PROJ.	REV. NO.	REVISION	INITIAL AND DATE: PREP'D	LEAD ENG	CHKD/VERIF'D	APRV'D	APRV'D	APRV'D
SDU6	A	SOLI INFORMAL REVIEW	E.T. 01-31-12	[illegible] 01-31-12				

THIS DRAWING HAS BEEN FURNISHED BY THE SAVANNAH RIVER SITE. THE INFORMATION AND IDEAS HEREIN MAY NOT BE USED NOR THE DRAWING REPRODUCED WITHOUT WRITTEN PERMISSION OF THE PRIME CONTRACTOR. ALL REPRODUCTIONS IN WHOLE OR IN PART, INCLUDING VENDOR'S SHOP DRAWINGS, SHALL BEAR OR REFER TO THIS STAMP.

REFERENCE DRAWINGS

REFERENCE STANDARDS

UNITED STATES DEPARTMENT OF ENERGY
SAVANNAH RIVER SITE

BLDG NO.	SITE CLEARANCE NO.	DESIGN AREA NO.	DESIGN GROUP
451-6Z	N/A	Z451	CH2MHILL

TITLE
Z AREA
SALTSTONE DISPOSAL SITE
SDU 6
TANK DESIGN
STRUCTURAL
FOUNDATION PLAN

SCALE	SHP DRAWING NO.	SHEET NO.	LATEST REVISION
3/16" = 1'-0"	NA	1 OF 1	A

#S: 1 REF FILES — YES — NO
LEVELS 1234567890123456789012345678901234567890123456789012345678901234
PSC: 1 PLOT DATE 01-31-12 TIME
DRAWN BY (ORIGINAL) L.T. DATE:
LAST CADD REV. BY:
Scale shown on this drawing is only applicable when plotted at 30"x42" (actual drawing size)

Attachment 3

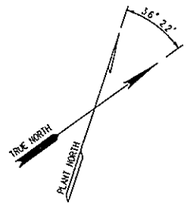

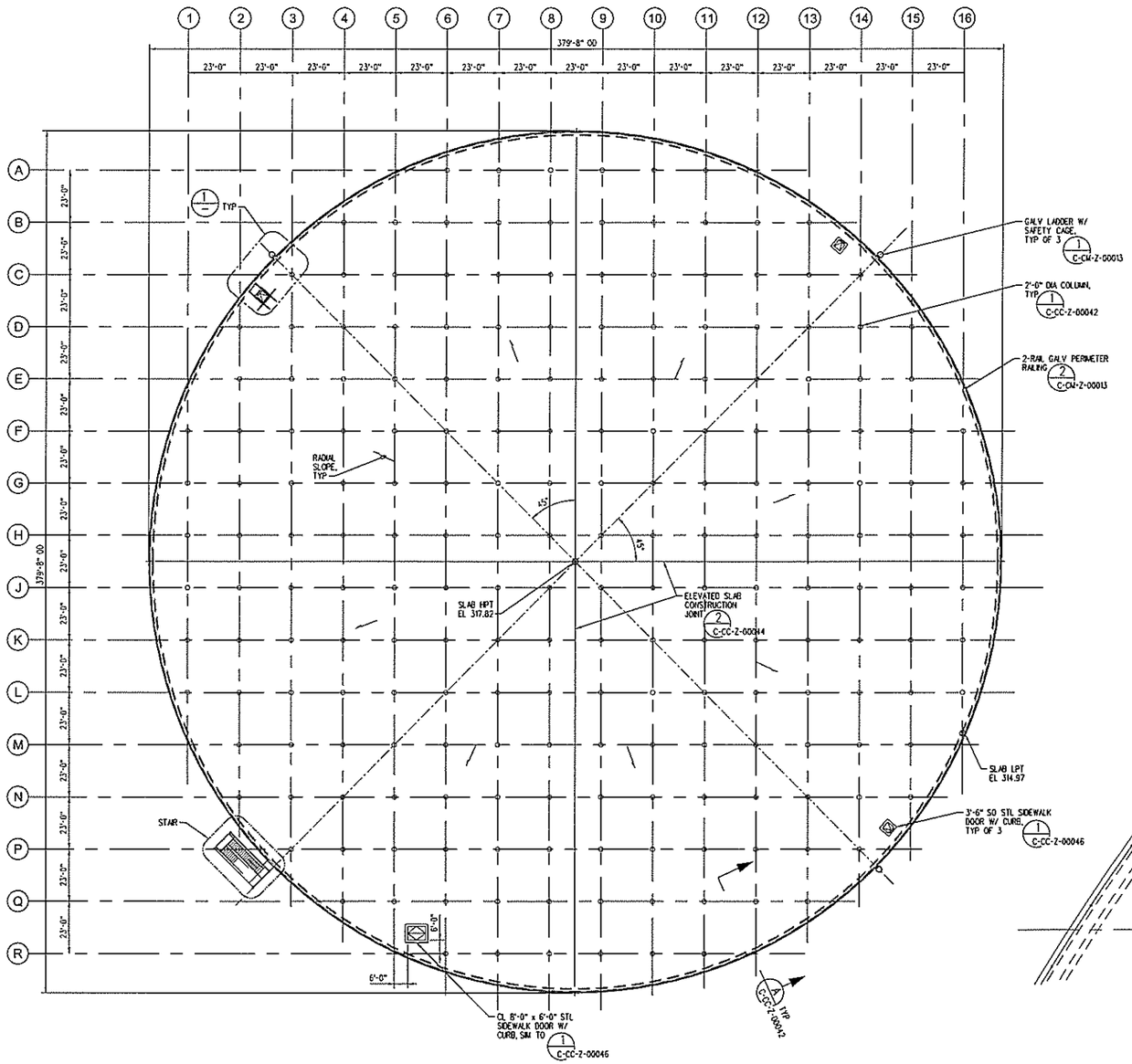

OVERALL ROOF PLAN
SCALE 3/64"=1'-0"

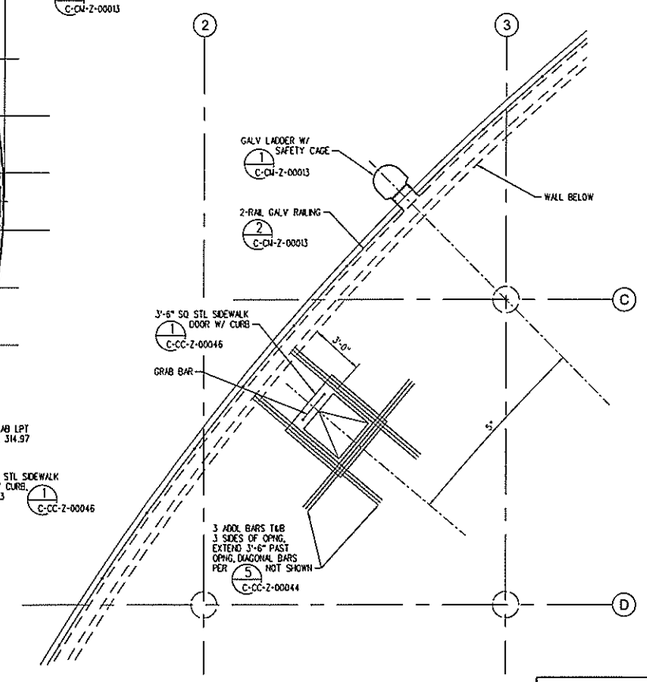

PARTIAL PLAN
SCALE 1/4"=1'-0"

PRELIMINARY ISSUED FOR INTERNAL REVIEW

C CC Z 00040 LATEST A REVISION

PROJ.	REV. NO.	REVISION	INITIAL AND DATE PREP'D	LEAD ENG	CHKD/VERIF'D	APRV'D	APRV'D	APRV'D
SDU6	A	SCI INFORMAL REVIEW	K.T 01-31-12	01-31-12				

THIS DRAWING HAS BEEN FURNISHED BY THE SAVANNAH RIVER SITE. THE INFORMATION AND DESIGN HERE PROVIDED MAY NOT BE USED NOR THE DRAWING REPRODUCED WITHOUT WRITTEN PERMISSION OF THE PRIME CONTRACTOR, AS REPRODUCED IN WHOLE OR IN PART, INCLUDING VENDORS SHOP DRAWINGS, SHALL BEAR OR REFER TO THIS STAMP.

REFERENCE DRAWINGS

REFERENCE STANDARDS

UNITED STATES DEPARTMENT OF ENERGY
SAVANNAH RIVER SITE

BLDG. NO.	SITE CLEARANCE NO.	DESIGN AREA NO.	DESIGN GROUP
451-BZ	N/A	Z451	CH2MHILL

TITLE
Z AREA
SALTSTONE DISPOSAL SITE
SDU 6
TANK DESIGN
STRUCTURAL
OVERALL ROOF PLAN AND PARTIAL PLAN

SCALE	SHP DRAWING NO.	SHEET NO.	LATEST REVISION
AS SHOWN	NA	1 OF 1	A

W.S.* ( ) REF FILES YES NO
LEVELS 1234567890123456789012345678901234567890123456789012345678901234567890123
PSC- 1 PLOT DATE 01-31-12 14:4C
DRAWN BY IORCHIANNA L-T DATE
LAST CADD REV. BY:
Scale shown on this drawing is only applicable when plotted at 30"x42" (actual drawing size)

Attachment 3

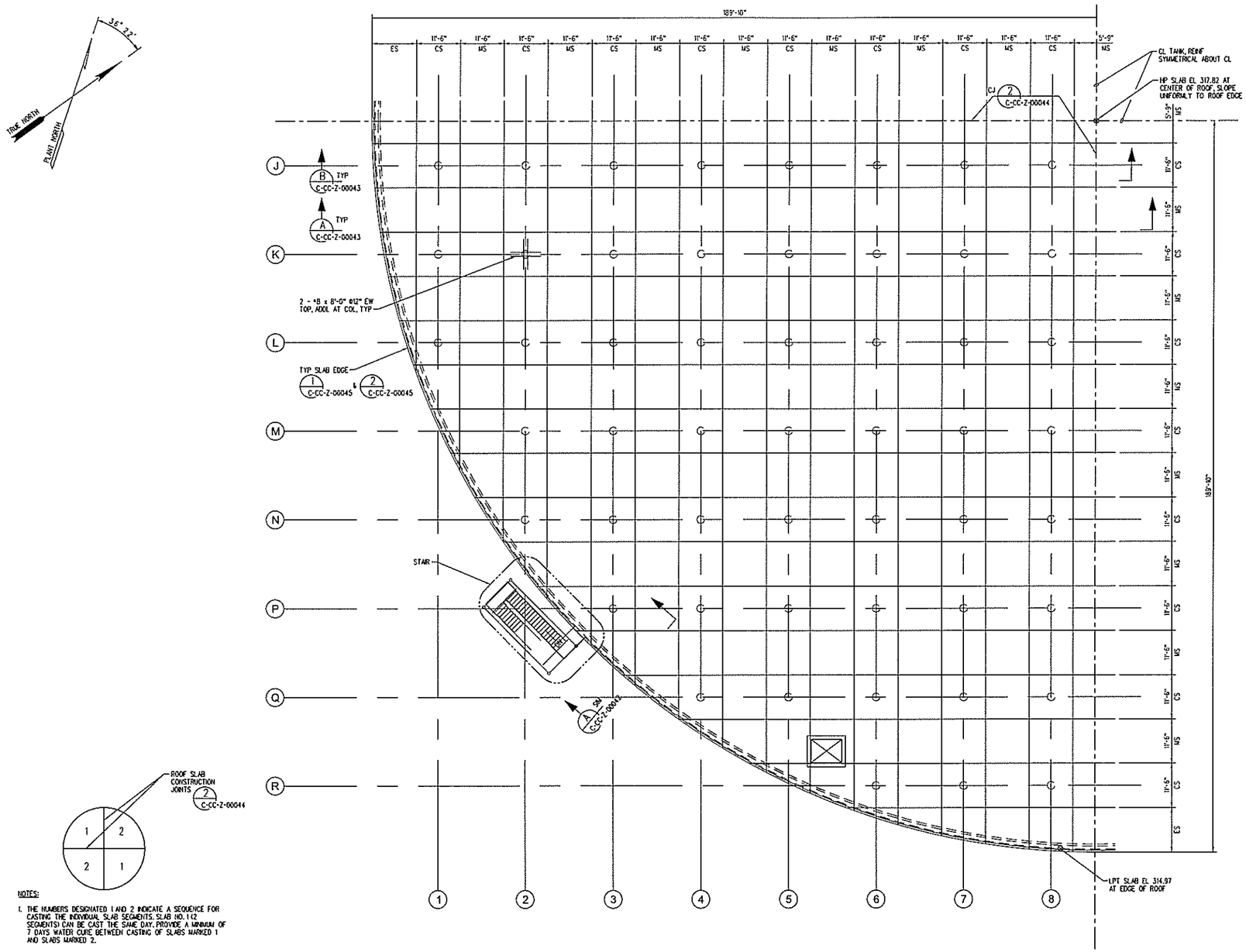

PARTIAL ROOF PLAN

NOTES:

1. THE NUMBERS DESIGNATED 1 AND 2 INDICATE A SEQUENCE FOR CASTING THE INDIVIDUAL SLAB SEGMENTS. SLAB NO. 1 (2 SEGMENTS) CAN BE CAST THE SAME DAY. PROVIDE A MINIMUM OF 7 DAYS WATER CURE BETWEEN CASTING OF SLABS MARKED 1 AND SLABS MARKED 2.

ROOF SLAB JOINT PLAN

NOTES

1. DO NOT PLACE ROOF SLAB SECTIONS UNTIL THE GROUT FOR THE POST-TENSIONING BLOCKOUTS HAS BEEN PLACED.
2. FOR DIAGONAL BARS AT OPENINGS, SEE 5 / C-CC-Z-00044
3. THE CONTRACTOR SHALL FURNISH AND INSTALL ANCHOR BOLTS IN THE ROOF SLAB AS REQUIRED BY THE PRESTRESSING SUBCONTRACTOR. REMOVE BOLTS AND REPAIR SLAB AT END OF CONSTRUCTION.

LEGEND

ROOF SLAB REINFORCING SYMBOLS:

T - TOP SHORT BARS
B - BOTTOM SHORT BARS
MS - MIDDLE STRIP
CS - COLUMN STRIP
ES - EDGE STRIP
—— BAR DESIGNATION INDICATES EXTRA BARS ARE PARALLEL TO SHAFT OF ARROW. AT END SPANS, EXTEND EXTRA BOTTOM BARS TO END OF SLAB.

PRELIMINARY ISSUED FOR INTERNAL REVIEW

C CC Z 00041 LATEST REVISION A

PROJ.	REV. NO.	REVISION	INITIAL AND DATE: PREP'D	LEAD ENG.	CHK'D/VERIF'D	APRV'D	APRV'D	APRV'D
SDU6	A	SDU INFORMAL REVIEW	ELT 01-31-12	[illegible] 01-31-12				

THIS DRAWING HAS BEEN FURNISHED BY THE SAVANNAH RIVER SITE. THE INFORMATION AND INSIGHT HERE THEREON MAY NOT BE USED NOR THE DRAWING REPRODUCED WITHOUT WRITTEN PERMISSION OF THE PRIME CONTRACTOR. ALL REPRODUCTIONS IN WHOLE OR IN PART, INCLUDING VENDORS SHOP DRAWINGS, SHALL BEAR OR REFER TO THIS STAMP.

REFERENCE DRAWINGS

REFERENCE STANDARDS

UNITED STATES DEPARTMENT OF ENERGY
SAVANNAH RIVER SITE

BLDG NO.	SITE CLEARANCE NO.	DESIGN AREA NO.	DESIGN GROUP
451-6Z	N/A	Z451	CH2MHILL

TITLE
Z AREA
SALTSTONE DISPOSAL SITE
SDU 6
TANK DESIGN
STRUCTURAL
PARTIAL ROOF PLAN

SCALE	SHP DRAWING NO.	SHEET NO.	LATEST REVISION
3/32" = 1'-0"	NA	1 OF 1	A

W.S. = 1 REF FILES 1 YES - NO
LEVELS 1234567890123456789012345678901234567890123456789012345678901234567890123
PSC: 1 PLOT DATE 01-31-12 TIME
DRAWN BY (ORG) HWA L-T DATE: LAST CADD REV. 01-
Same shown on this drawing is only applicable when plotted at 30"x42" Tectum Drawing sheet

Attachment 3

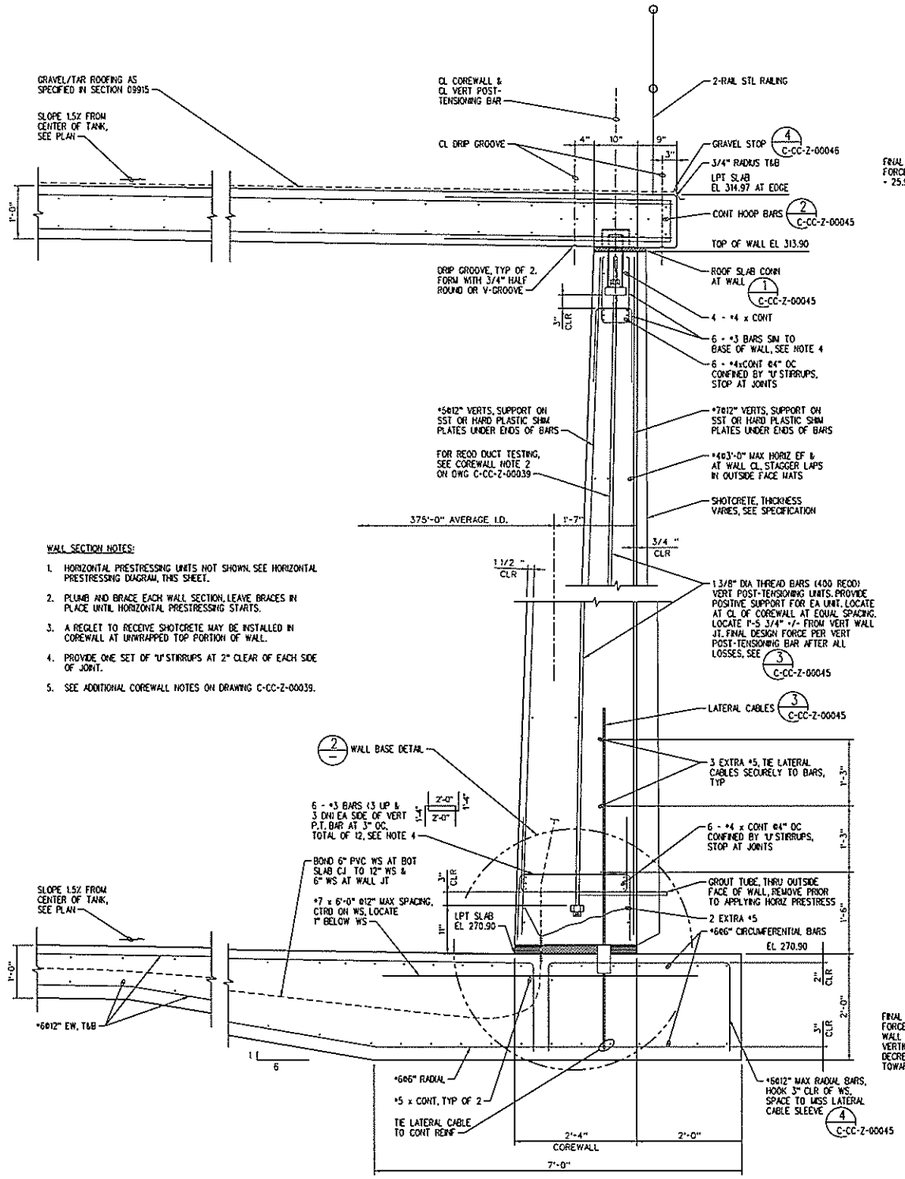

WALL SECTION NOTES:

1. HORIZONTAL PRESTRESSING UNITS NOT SHOWN. SEE HORIZONTAL PRESTRESSING DIAGRAM, THIS SHEET.
2. PLUMB AND BRACE EACH WALL SECTION. LEAVE BRACES IN PLACE UNTIL HORIZONTAL PRESTRESSING STARTS.
3. A REGLET TO RECEIVE SHOTCRETE MAY BE INSTALLED IN COREWALL AT UNWRAPPED TOP PORTION OF WALL.
4. PROVIDE ONE SET OF 'U' STIRRUPS AT 2" CLEAR OF EACH SIDE OF JOINT.
5. SEE ADDITIONAL COREWALL NOTES ON DRAWING C-CC-Z-00039.

TYPICAL WALL SECTION

SECTION A
SCALE 1"=1'-0"
C-CC-Z-00039
C-CC-Z-00040
C-CC-Z-00041
C-CC-Z-00045

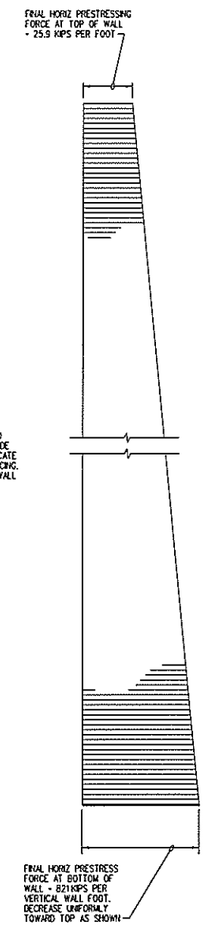

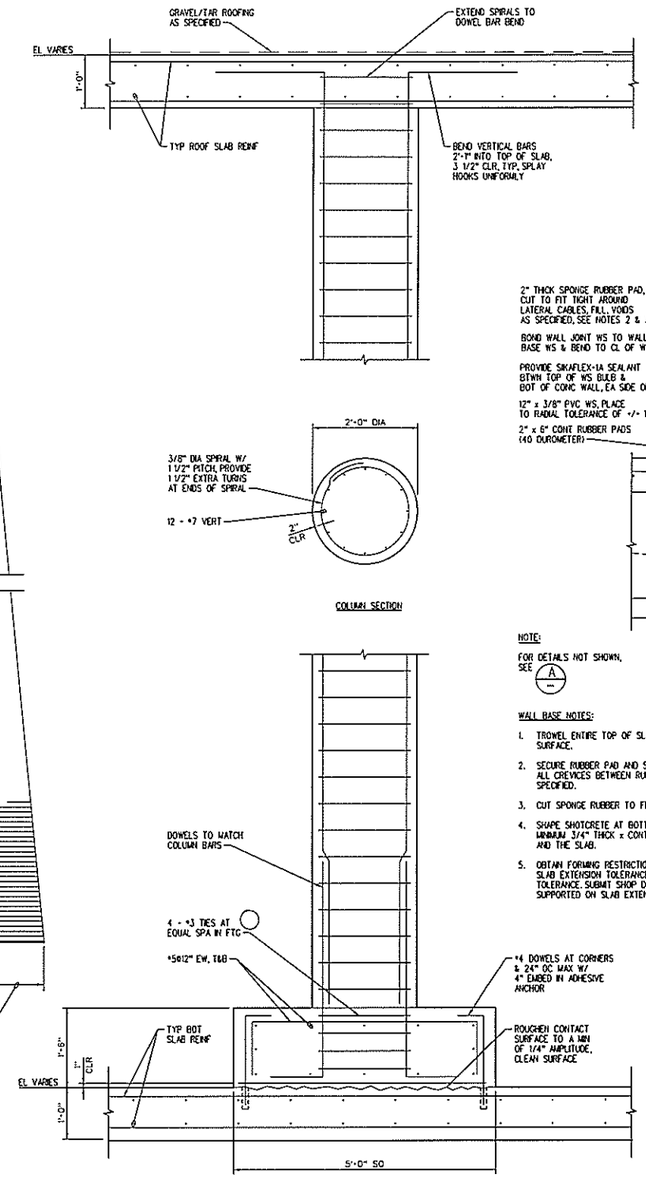

TYPICAL COLUMN SECTION

DETAIL 1
SCALE 1"=1'-0"
C-CC-Z-00039
C-CC-Z-00040

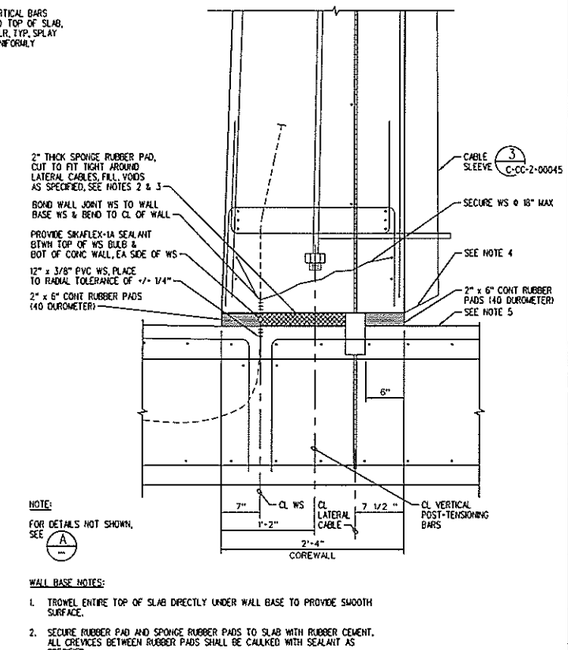

NOTE:
FOR DETAILS NOT SHOWN, SEE A

WALL BASE NOTES:

1. TROWEL ENTIRE TOP OF SLAB DIRECTLY UNDER WALL BASE TO PROVIDE SMOOTH SURFACE.
2. SECURE RUBBER PAD AND SPONGE RUBBER PADS TO SLAB WITH RUBBER CEMENT. ALL CREVICES BETWEEN RUBBER PADS SHALL BE CAULKED WITH SEALANT AS SPECIFIED.
3. CUT SPONGE RUBBER TO FIT TIGHTLY AROUND LATERAL CABLE SLEEVE.
4. SHAPE SHOTCRETE AT BOTTOM OF WALL TO PROVIDE FREE JOINT OR PROVIDE A MINIMUM 3/4" THICK x CONTINUOUS SPONGE RUBBER PAD BETWEEN THE SHOTCRETE AND THE SLAB.
5. OBTAIN FORMING RESTRICTIONS FROM PRESTRESSOR FOR TOP OF EXTERIOR WALL SLAB EXTENSION TOLERANCE AND LEVEL REQUIREMENTS AND FOR ROUNDNESS TOLERANCE. SUBMIT SHOP DRAWING SHOWING WHERE PRESTRESS EQUIPMENT WILL BE SUPPORTED ON SLAB EXTENSION DURING WRAPPING.

WALL BASE DETAIL

DETAIL 2
SCALE 1 1/2"=1'-0"

PRELIMINARY ISSUED FOR INTERNAL REVIEW

C CC Z 00042 LATEST REVISION A

PROJ.	REV. NO.	REVISION	PREPD	LEAD ENG	CHKD/VERF'D	APRV'D	APRV'D	APRV'D
SDU6	A	SOL INFORMAL REVIEW	K.T 01-31-12	[illegible] 01-31-12				

THIS DRAWING HAS BEEN FURNISHED BY THE SAVANNAH RIVER SITE. THE INFORMATION AND DATA SHOWN HEREON MAY NOT APPLY TO OTHER DRAWINGS REFERENCED. THE SAVANNAH RIVER SITE DOES NOT WARRANT THE CONTENTS OR ANY REPRESENTATIONS IN WHOLE OR IN PART INCLUDING VENDOR'S SHOP DRAWINGS, SHALL BEAR OR REFER TO THIS STAMP.

REFERENCE DRAWINGS

REFERENCE STANDARDS

UNITED STATES DEPARTMENT OF ENERGY
SAVANNAH RIVER SITE

BLDG. NO.	SITE CLEARANCE NO.	DESIGN AREA NO.	DESIGN GROUP
451-6Z	N/A	Z451	CH2MHILL

TITLE
Z AREA
SALTSTONE DISPOSAL SITE
SDU 6
TANK DESIGN
STRUCTURAL
WALL AND COLUMN SECTION AND DETAILS

SCALE	SRP DRAWING NO.	SHEET NO.	LATEST REVISION
AS SHOWN	NA	1 OF 1	A

Scale shown on this drawing is only applicable when plotted at 30"x42" (ISO/ANSI drawing size)

W.S. + C REF FILES YES NO

LEVELS 1234567890123456789012345678901234567890123456789012345678901234567890123

PSC- 1 PLOT DATE 01-31-12 TIME

DRAWN BY (ORIGINAL) K.T DATE LAST CADD REV. BY

Attachment 3

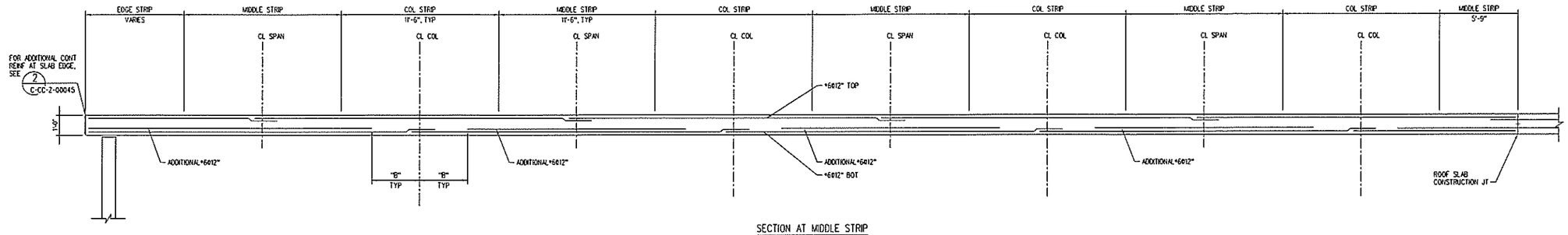

SECTION AT MIDDLE STRIP
SCHEMATIC ABOUT CL - SEE ROOF PLAN

SECTION A / NTS / C-CC-Z-00041

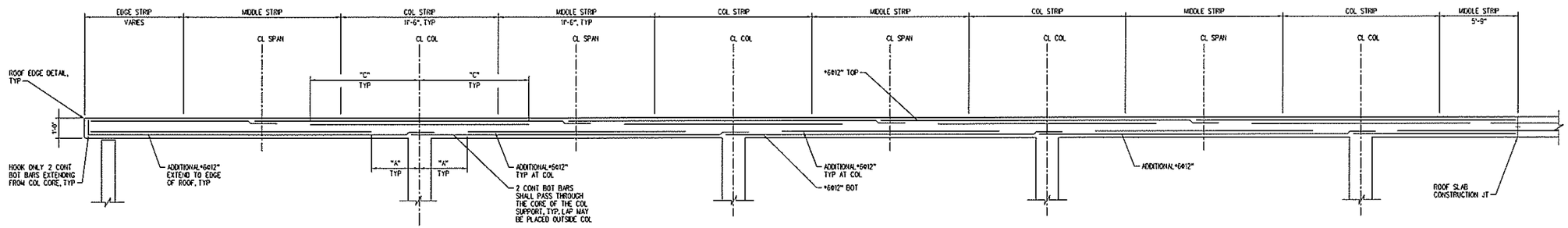

SECTION AT COLUMN STRIP
SCHEMATIC ABOUT CL - SEE ROOF PLAN

SECTION B / NTS / C-CC-Z-00041

REINFORCING LENGTHS AND DIMENSIONS (SEE SECTIONS ABOVE FOR LOCATIONS)	
A	6'-4" MAX
B	7'-10" MAX
C	4'-0" MIN

NOTES FOR ROOF REINFORCING:

1. BOTTOM BARS SHALL BE 2" CLEAR AT BOTTOM OF SLAB, AND TOP BARS SHALL BE 2" CLEAR AT TOP OF SLAB.
2. PROVIDE #6@12" EACH WAY TOP AND BOTTOM OF SLAB FOR TYPICAL, CONTINUOUS REINFORCING. SPLICE TOP BARS AT CENTERLINE OF SPAN AND SPLICE BOTTOM BARS AT COLUMN LINES. PROVIDE TYPICAL BARS AT 12"+/- SPACING PER STRIP STARTING 3" FROM EDGE OF STRIP. PROVIDE A MINIMUM OF 12 BARS PER EACH TYPICAL MIDDLE AND COLUMN STRIPS. TYPICAL REINFORCING IS ORTHAGONAL AND LOCATED PARALLEL TO STRIPS. FOR LAP LENGTHS, SEE GENERAL STRUCTURAL NOTES.
3. ADDITIONAL REINFORCING TO THE TYPICAL CONTINUOUS BARS EACH WAY, TOP AND BOTTOM, SHALL BE AS INDICATED AND SHALL BE DISTRIBUTED UNIFORMLY AND SYMMETRICALLY ACROSS COLUMN OR MIDDLE STRIPS. ALTERNATE WITH TYPICAL REINFORCING.
4. REINFORCING SHOWN ON ONE QUADRANT ON DRAWING C-CC-Z-00041 IS TYPICAL FOR ALL QUADRANTS.
5. TRANSVERSE BARS NOT SHOWN.
6. ALL BARS IN THE SAME DIRECTION IN THE SAME LAYER (TOP & BOTTOM) SHALL BE IN THE SAME PLANE.
7. FOR ADDITIONAL REINFORCING AROUND SIDEWALK DOORS, PIPE PENETRATIONS, ETC. SEE NOTES ON DRAWING xxxxxxxxx AND
8. THE CONTRACTOR SHALL FURNISH AND INSTALL ANCHOR BOLTS IN THE ROOF SLAB AS REQUIRED BY THE PRESTRESSING SUBCONTRACTOR. REMOVE AND REPAIR AT END OF CONSTRUCTION AS APPROVED.
9. BARS FROM ONE SPAN MAY BE CONTINUOUS AND EXTENDED TO ADJACENT SPANS.
10. BURY BARS OR CARRIER BARS MAY NOT BE USED IN ROOF SLAB.
11. NUMBER OF SPANS AND COLUMNS IS SCHEMATIC AND MAY VARY FROM THAT OCCURING IN ANY GIVEN ROOF STRIP.

PRELIMINARY ISSUED FOR INTERNAL REVIEW

C CC Z 00043 LATEST REVISION A

PROJ.	REV. NO.	REVISION	PREP'D	LEAD ENG	CHKD/VERIF'D	APRV'D	APRV'D	APRV'D
SDU6	A	50% INFORMAL REVIEW	E.T 01-31-12	01-31-12				

REFERENCE DRAWINGS

REFERENCE STANDARDS

THIS DRAWING HAS BEEN FURNISHED BY THE SAVANNAH RIVER SITE. THE INFORMATION AND IDEAS HERE THEREON MAY NOT BE USED NOR THE DRAWING REPRODUCED WITHOUT WRITTEN PERMISSION OF THE PRIME CONTRACTOR. ALL REPRODUCTIONS IN WHOLE OR IN PART, INCLUDING VENDORS' SHOP DRAWINGS, SHALL BEAR OR REFER TO THIS STAMP.

UNITED STATES DEPARTMENT OF ENERGY
SAVANNAH RIVER SITE

BLDG NO.	SITE CLEARANCE NO.	DESIGN AREA NO.	DESIGN GROUP
451-6Z	N/A	Z451	CH2MHILL

TITLE
Z AREA
SALTSTONE DISPOSAL SITE
SDU 6
TANK DESIGN
STRUCTURAL
TYPICAL ROOF SECTIONS

SCALE	SHP DRAWING NO.	SHEET NO.	LATEST REVISION
AS SHOWN	NA	1 OF 1	A

W.S. REF FILES YES NO
LEVELS 1 2 3 4 5 6 7 8 9 0 1 2 3 4 5 6 7 8 9 0 1 2 3 4 5 6 7 8 9 0 1 2 3 4 5 6 7 8 9 0 1 2 3 4 5 6 7 8 9 0 1 2 3 4 5 6 7 8 9 0 1 2 3 4 5 6 7 8 9 0 1 2 3
PSC- 1 PLOT DATE 01-31-12
DRAWN BY TAMC
LAST CADD REV. BY:
DATE:
Scale shown on this drawing is only applicable when plotted at 30"x42" (actual drawing size)

Attachment 3

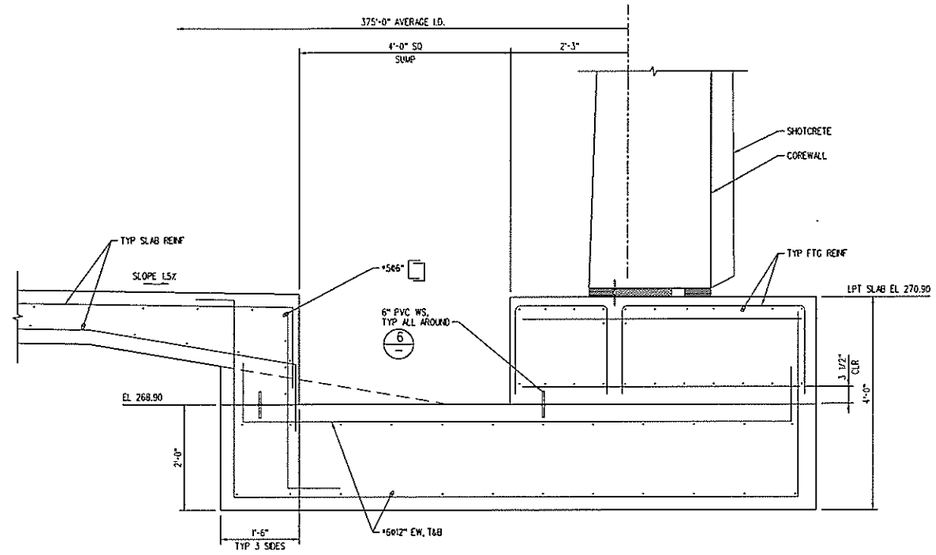

SECTION A
SCALE 1"=1'-0"
C-CC-Z-00039

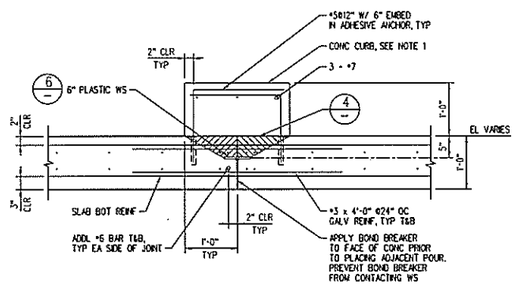

NOTES:
1. CONCRETE CURB ABOVE CONTROL JOINT SHALL BE PLACED AFTER REMAINDER OF TANK CONSTRUCTION (INCLUDING ROOF SLAB) IS COMPLETE.
2. STOP TYPICAL SLAB REINFORCING EACH SIDE OF JOINT.

BASE SLAB CONTROL JOINT
DETAIL 1
SCALE 1"=1'-0"
C-CC-Z-00039
C-CC-Z-00045

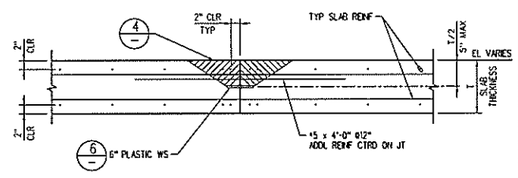

ROOF SLAB CONSTRUCTION JOINT
DETAIL 2
SCALE 1"=1'-0"
C-CC-Z-00039
C-CC-Z-00041

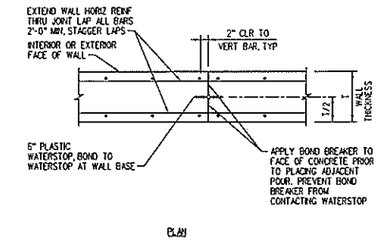

ELEV

VERTICAL WALL CONTROL JOINT
DETAIL 3
SCALE NTS
C-CC-Z-00045

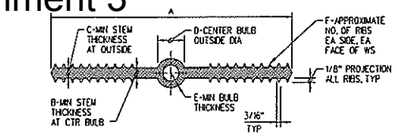

SIZE	A	B	C	D	E	F
6"x3/8"	6"	3/8"	3/8"	7/8"	1/4"	6
12"x3/8"	12"	3/8"	3/8"	2"	3/8"	8

NOTES:
1. MATERIAL QUALITY PER SPECIFICATIONS.
2. DIM REQUIREMENTS INDICATED SHOULD BE GIVEN TO SUPPLIERS PRIOR TO PLACING ORDERS.
3. NON-ROUND CENTER BULBS SHALL HAVE A MIN OUTSIDE DIM OF 'D'.

PLASTIC WATERSTOP
DETAIL 6
SCALE NTS
C-CC-Z-00045

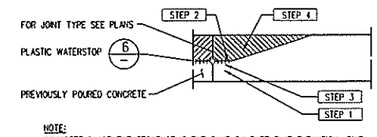

NOTE:
CONCRETE PLACEMENT SEQUENCE IS THE SAME ON BASE SLAB EXPANSION JOINT.

STEP 1
PLACE CONCRETE BELOW WATERSTOP FIRST, REMOVE ALL AIR VOIDS BY VIBRATING THOROUGHLY.

STEP 2
TO CONFIRM THERE ARE NO AIR VOIDS, LIFT WATERSTOP. A CONTINUOUS IMPRESSION OF THE WATERSTOP, INCLUDING EDGE OF BULB, SHOULD BE VISIBLE IN THE FRESH CONCRETE. CONTINUE THIS PROCEDURE ALONG THE ENTIRE POURED JOINT, END TO END. IF A CONTINUOUS IMPRESSION IS CONFIRMED, PROCEED WITH STEP 4. IF A VOID LARGER THAN 1/4 INCH IN DIAMETER IS PRESENT ANYWHERE IN THE WATERSTOP IMPRESSION, PROCEED WITH STEP 3.

STEP 3
IF A VOID LARGER THAN 1/4 INCH IN DIAMETER IS PRESENT IN THE WATERSTOP IMPRESSION, ADDITIONAL CONCRETE SHALL BE PLACED UNDER THE WATERSTOP, VIBRATED, AND STEP 2 REPEATED.

STEP 4
FINISH PLACING CONCRETE ABOVE THE WATERSTOP TO TOP OF SLAB.

CONCRETE PLACEMENT SEQUENCE AT JOINTS
DETAIL 4
SCALE NTS
C-CC-Z-00039

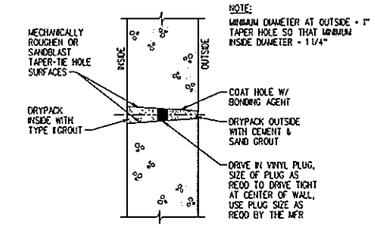

NOTE:
MINIMUM DIAMETER AT OUTSIDE = 1" TAPER HOLE SO THAT MINIMUM INSIDE DIAMETER = 1 1/4"

CONSTRUCTION STEPS:
1. SANDBLAST OR MECHANICALLY ROUGHEN WITH ELECTRIC EQUIPMENT.
2. DRIVE IN VINYL PLUG.
3. COAT INSIDE AND WHILE BONDING AGENT IS TACKY, DRYPACK INSIDE.
4. COAT OUTSIDE AND WHILE BONDING AGENT IS TACKY, DRYPACK OUTSIDE.

FORM TIE-THROUGH BOLT
DETAIL 7
SCALE NTS

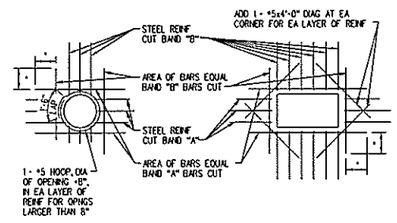

NOTES:
1. TYPICAL FOR ALL OPENINGS IN CONCRETE WALLS AND SLABS UNLESS INDICATED OTHERWISE ON PLANS.
2. DO NOT WELD REINFORCEMENT TO PIPE SLEEVES, INSERTS, OR EMBEDMENTS.
3. (+) PROVIDE MINIMUM LAP AS NOTED OR SHOWN ON PLANS

OPENING REINFORCING
DETAIL 5
SCALE NTS
C-CC-Z-00040
C-CC-Z-00041

PRELIMINARY ISSUED FOR INTERNAL REVIEW

C CC Z 00044 LATEST REVISION A

PROJ.	REV. NO.	REVISION	INITIAL AND DATE: PREP'D	LEAD ENG	CHKD/VERIF'D	APRV'D	APRV'D	APRV'D
SDU6	A	SOE INFORMAL REVIEW	LT 01-31-12	01-31-12				

THIS DRAWING HAS BEEN FURNISHED BY THE SAVANNAH RIVER SITE. THE INFORMATION AND IDEAS HERE THEREON MAY NOT BE USED NOR THE DRAWING REPRODUCED WITHOUT WRITTEN PERMISSION OF THE SRNS CONTRACTOR. ALL REPRODUCTIONS IN WHOLE OR IN PART, INCLUDING VENDOR'S SHOP DRAWINGS, SHALL BEAR OR NOTE TO THIS EFFECT.

REFERENCE DRAWINGS

REFERENCE STANDARDS

UNITED STATES DEPARTMENT OF ENERGY
SAVANNAH RIVER SITE

BUILD NO.	SITE CLEARANCE NO.	DESIGN AREA NO.	DESIGN GROUP
451-6Z	N/A	Z451	CH2MHILL

TITLE
Z AREA
SALTSTONE DISPOSAL SITE
SDU 6
TANK DESIGN
STRUCTURAL
SECTIONS AND DETAILS

SCALE	SHP DRAWING NO.	SHEET NO.	LATEST REVISION
AS SHOWN	NA	1 OF 1	A

W.S.= ( ) REF FILES YES NO
LEVELS
PSC= 1 DRAWN BY IORGIVONIA L+T LAST CADD REV. BY:
PLOT DATE 01-31-12 TMC DATE:
Scale shown on this drawing is only applicable when plotted at 22"x34" (actual drawing size)

Attachment 3

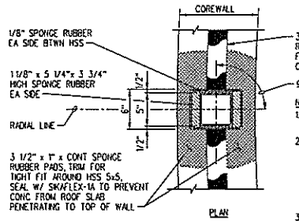

NOTES:

1. TROWEL TOP OF WALL TO PROVIDE SMOOTH SURFACE.
2. TO ENSURE PROPER FUNCTIONING OF LATERAL CONNECTIONS, TUBES SHALL BE CHECKED PRIOR AND DURING CONCRETE WALL PLACEMENT TO VERIFY RADIAL AND TANGENTIAL ORIENTATION. UNITS OUT OF ALIGNMENT BY MORE THAN 2°, AFTER MAJOR PLACEMENT, MAY REQUIRE MAJOR RECONSTRUCTION.
3. SECURE ALL PADS TO WALL TOP WITH RUBBER CEMENT.
4. VERTICALLY POST-TENSION WALLS PRIOR TO POURING ROOF SLABS.

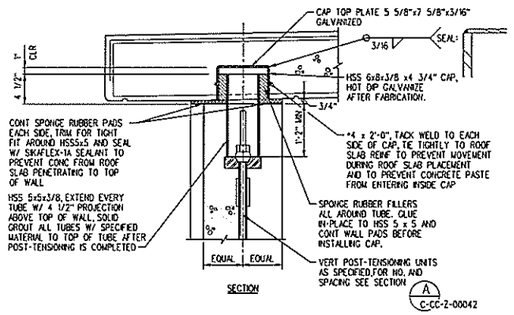

ROOF SLAB SEISMIC CONNECTION

DETAIL 1 — NTS — C-CC-Z-00041, C-CC-Z-00042, C-CC-Z-00046

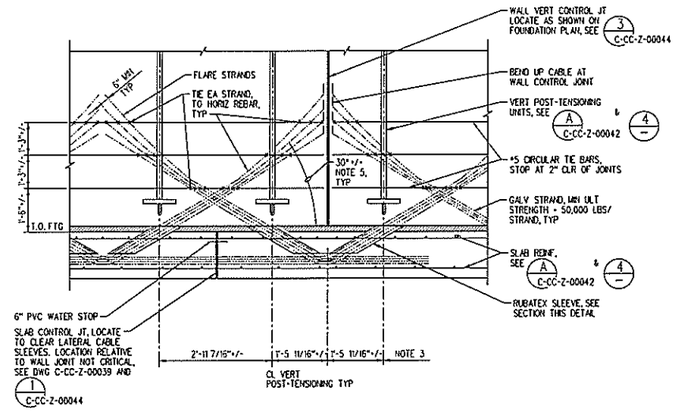

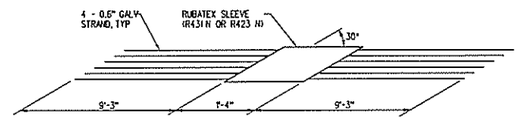

NOTES:

1. FORM RUBATEX SLEEVE OF TWO PIECES OF RUBATEX. FORM GROOVES IN RUBATEX BY ROUTING OUT SOCKETS SMALL ENOUGH FOR TIGHT FIT. INSERT CABLES AND GLUE PIECES TOGETHER. SLEEVE SHALL FORM A TIGHT FIT AROUND CABLES TO PREVENT MORTAR INTRUSION.
2. BOND 6" PVC WATERSTOP IN SLAB CJ TO 12"x3/8" PVC WATERSTOP AT WALLS AS SPECIFIED, SEE A C-CC-Z-00042 AND 6 C-CC-Z-00044
3. DIMENSIONS FOR SPACING UNITS SHOWN AT CL OF WALL AT WALL BASE.
4. AT CONTRACTORS OPTION, FURNISH AND INSTALL LATERAL CABLE SLEEVES LONGER AND HIGHER THAN TOP OF BASE PAD AND THEN FIELD TRIM BACK LEVEL WITH TOP OF PAD.
5. MAINTAIN AVERAGE 30° ANGLE FOR LENGTH OF STRANDS.
6. FOUR STRANDS SHOWN IN ELEVATION AS AN EXAMPLE. SEE SECTION FOR ACTUAL NUMBER. PROVIDE THREE HORIZONTAL TIE BARS FOR STRANDS EXTENDING MORE THAN 7'-0" BEYOND SLEEVE.
7. MARK TOP OF FOOTING OUTSIDE WALL AT POST-TENSIONING UNITS FOR FUTURE LOCATION.

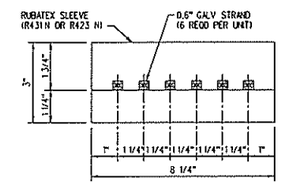

LATERAL CABLE SLEEVE

DETAIL 3 — NTS — C-CC-Z-00042

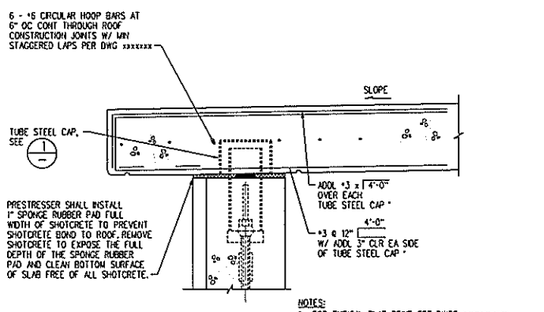

NOTES:

1. FOR TYPICAL SLAB REINF, SEE DWGS xxxxxxxxx
2. * ORIENT PARALLEL TO TYP REINF AT JOINTS AND CHANGE ORIENTATION AT SLAB 1/4 POINTS.

SLAB EDGE DETAIL

DETAIL 2 — SCALE 1 1/2"=1'-0" — C-CC-Z-00041, C-CC-Z-00042, C-CC-Z-00043

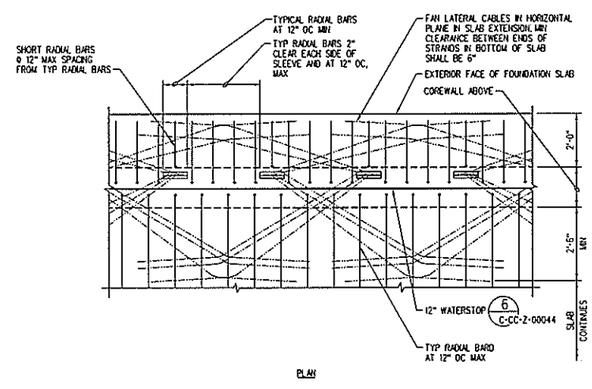

LATERAL CABLES IN WALL FOOTING

DETAIL 4 — NTS — C-CC-Z-00042

PRELIMINARY ISSUED FOR INTERNAL REVIEW

C CC Z 00045 — LATEST REVISION A

PROJ.	REV. NO.	REVISION	INITIAL AND DATE: PRP'D	LEAD ENG	CHKD/VERF'D	APR'VD	APR'VD	APR'VD

PROJ.	REV. NO.	REVISION	INITIAL AND DATE: PRP'D	LEAD ENG	CHKD/VERF'D	APR'VD	APR'VD	APR'VD
SDU6	A	50% INFORMAL REVIEW	LT 01-31-12	01-31-12				

THIS DRAWING HAS BEEN FURNISHED BY THE SAVANNAH RIVER SITE. THE INFORMATION AND DATA HERE SHOWN MAY NOT BE USED NOR THE DRAWING REPRODUCED WITHOUT WRITTEN PERMISSION OF THE PRIME CONTRACTOR. ALL DRAWINGS SHOWING THE SEAL OR NOTE TO THIS STAMP, VENDOR'S SHOP DRAWINGS, SHALL BEAR OR REFER TO THIS STAMP.

REFERENCE DRAWINGS

REFERENCE STANDARDS

UNITED STATES DEPARTMENT OF ENERGY

SAVANNAH RIVER SITE

BLDG. NO.	SITE CLEARANCE NO.	DESIGN AREA NO.	DESIGN GROUP
451-6Z	N/A	Z451	CH2MHILL

TITLE: Z AREA SALTSTONE DISPOSAL SITE SDU 6 TANK DESIGN STRUCTURAL DETAILS

SCALE	SHP DRAWING NO.	SHEET NO.	LATEST REVISION
AS SHOWN	NA	1 OF 1	A

Scale shown on this drawing is only applicable when plotted at 30"x42" (actual drawing size)

REF FILES: YES NO — LEVELS — PSC= 1 — PLOT DATE 01-31-12 — DRAWN BY KORCH #9NA L-T — LAST CADD REV. BY: TMC — DATE:

Attachment 3

NOTES:
1. CURB TYPICAL AROUND SIDEWALK DOOR PERIMETER.
2. LOCATE HANDRAIL POSTS AND CURB REBAR EMBEDS TO MISS ROOF TIES TO WALL PER (1) C-CC-Z-00045

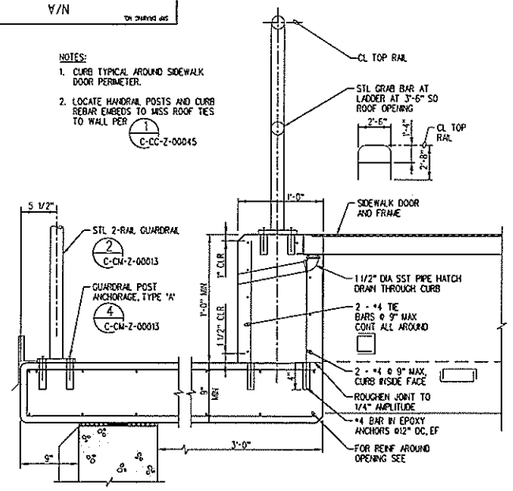

ROOF CURB DOOR

DETAIL (1) C-CC-Z-00040
NTS

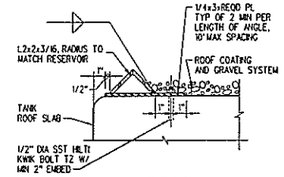

SECTION

NOTES:
1. HOT DIP GALVANIZE AFTER FABRICATION.
2. ANGLE SECTION LENGTHS AS REQUIRED TO ALLOW RAIN RUNOFF BELOW ANGLE AND TO FIT CIRCULAR EDGE.
3. TRIM ANGLE AS REQUIRED FOR ELECTRICAL SUPPORTS. SEE ELECTRICAL DRAWINGS.

GRAVEL STOP

DETAIL (4) C-CC-Z-00042
NTS

EQUIPMENT PAD

DETAIL (2)
NTS

EMBED PLATE

DETAIL (3)
NTS

NOTES:
1. PROVIDE PROTECTION FOR DISSIMILAR METALS AND CONCRETE AS SPECIFIED.
2. AMERICAN STANDARD C12x20.7 STRINGERS TYPICAL EXCEPT WHERE OTHERWISE NOTED ON PLANS.
3. GALVANIZED STEEL GRATING TREADS UNLESS OTHERWISE NOTED ON PLANS.
4. STAIR HANDRAIL NOT SHOWN.
5. STAIR MANUFACTURER TO COORDINATE BOLTED TREADS AND HANDRAIL CONNECTIONS.
6. FIELD VERIFY DIMENSIONS AND ELEVATIONS PRIOR TO FABRICATION.
7. HOT DIP GALVANIZE ALL MEMBERS AND FASTENERS AFTER FABRICATION.
8. FOR RISER PLATE SEE PARTIAL RISER PLATE DETAIL UNO. CLEARANCE BETWEEN TOP OF RISER PLATE AND BOTTOM OF TREAD TO BE 3 3/4" MAX. FOR STAIRS WITH PICKET HANDRAIL EXTEND RISER PLATE PER FULL RISER PLATE DETAIL.

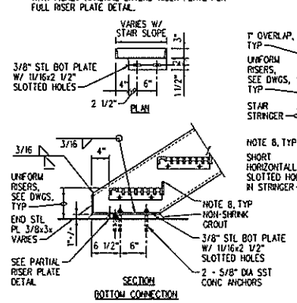

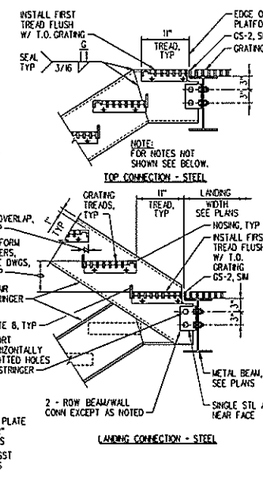

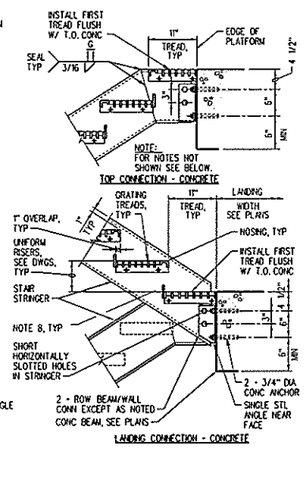

STAIRWAY WIDTH	TREAD BEARING BARS STEELTREAD
2'-3" OR LESS	3/4" x 3/16"
2'-9" OR LESS	1" x 3/16"
3'-3" OR LESS	1 1/4" x 3/16"
4'-7" OR LESS	1 1/2" x 3/16"

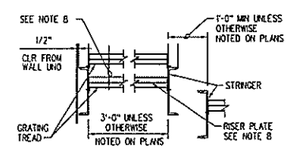

STAIR TREADS

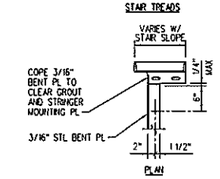

BOTTOM CLOSURE PLATE

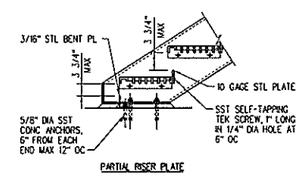

PARTIAL RISER PLATE

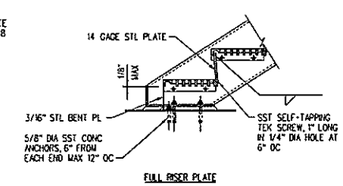

FULL RISER PLATE

STAIR DETAILS

DETAIL (5) C-CM-Z-00014
NTS

PRELIMINARY ISSUED FOR INTERNAL REVIEW

C CC Z 00046 — LATEST REVISION A

PROJ.	REV. NO.	REVISION	INITIAL AND DATE: PREP'D	LEAD ENG	CHKD/VERIF'D	APRV'D	APRV'D	APRV'D
5206	A	50% INFORMAL REVIEW	ILT 01-31-12	[illegible] 01-31-12				

THIS DRAWING HAS BEEN FURNISHED BY THE SAVANNAH RIVER SITE. THE INFORMATION AND DATA HERE THEREON SHALL NOT BE USED NOR THE DRAWING REPRODUCED WITHOUT WRITTEN PERMISSION OF THE PRIME CONTRACTOR. ALL REPRODUCTIONS IN WHOLE OR IN PART, INCLUDING VENDORS SHOP DRAWINGS, SHALL BEAR OF NOTICE TO THIS STAMP.

REFERENCE DRAWINGS

REFERENCE STANDARDS

UNITED STATES DEPARTMENT OF ENERGY
SAVANNAH RIVER SITE

BLDG. NO.	SITE CLEARANCE NO.	DESIGN AREA NO.	DESIGN GROUP
451-5Z	N/A	Z451	CH2MHILL

TITLE: Z AREA SALTSTONE DISPOSAL SITE SDU 6 TANK DESIGN STRUCTURAL DETAILS

SCALE	SKP DRAWING NO.	SHEET NO.	LATEST REVISION
AS SHOWN	NA	1 OF 1	A

W.S. + L REF FILES: YES NO
LEVELS: 1234567890123456789012345678901234567890123456789012345678901234567890123
PSC+ 1 PLOT DATE 01-31-12
DRAWN BY (ORIGIN WHM) L-T DATE
LAST CHKD REV. BY:
Scale shown on this drawing is only approximate when plotted at 30"x42" (actual drawing size)

Attachment 3

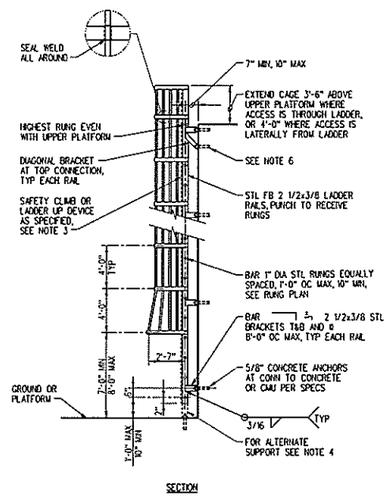

SECTION

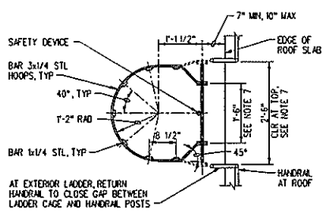

PLAN

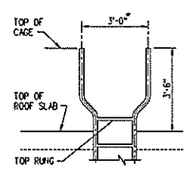

ELEVATION

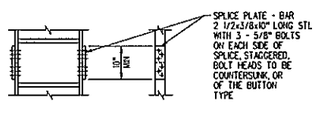

FRONT ELEVATION SIDE ELEVATION

SPLICE DETAIL

EXTERIOR LADDER W/ SAFETY CAGE
(GALVANIZED STEEL)

DETAIL 1 / NTS — C-CC-Z-00040

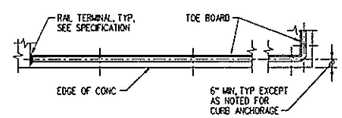

PLAN

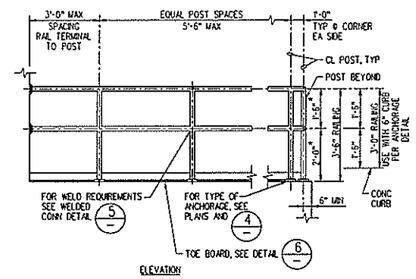

ELEVATION

NOTE:
* SPACE RAILS EVENLY, 1'-9" APART, WHERE TOEBOARD IS NOT USED.

TWO RAIL GUARDRAIL
GALVANIZED STEEL

DETAIL 2 / NTS — C-CC-Z-00040, C-CC-Z-00046

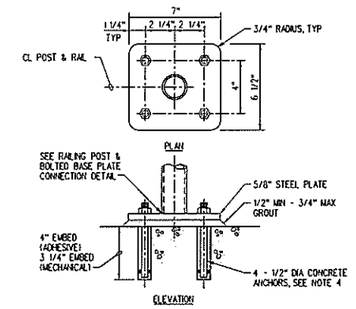

PLAN

ELEVATION

NOTES:
1. DO NOT CUT REINFORCING WITHOUT PRIOR CONSENT FROM PROJECT ENGINEER.
2. PROVIDE PROTECTION FOR DISSIMILAR METALS AND CONCRETE PER SPECIFICATIONS.
3. CONCRETE ANCHOR SIZE AND EMBEDMENTS CALCULATED FOR HILTI ADHESIVES, RE-500-SD AND HY 150-MAX-SD, AND HILTI MECHANICAL ANCHORS KBTZ.

TYPE A

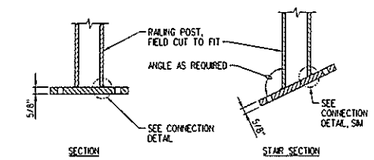

SECTION STAIR SECTION

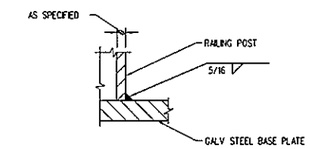

CONNECTION DETAIL

TYPE B

GUARDRAIL POST ANCHORAGE
GALVANIZED STEEL

DETAIL 4 / NTS — C-CC-Z-00046

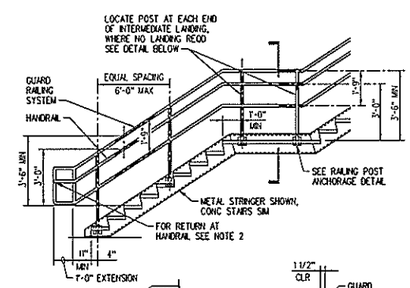

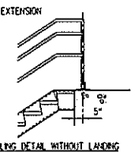

RAILING DETAIL WITHOUT LANDING

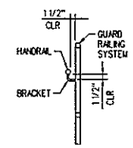

RAILING SECTION

NOTES:
1. PROVIDE TOE BOARD AT LANDING WHERE REQUIRED.
2. RETURN ENDS OF HANDRAIL TO GUARD AT BOTH ENDS.

RAILING W/ EXTENSION
TWO RAIL STAIR
GALVANIZED STEEL

DETAIL 3 / NTS — C-CM-Z-00014

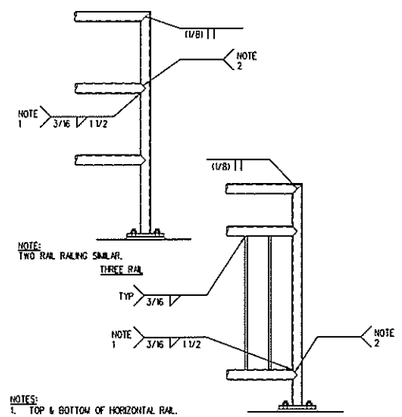

NOTES:
1. TOP & BOTTOM OF HORIZONTAL RAIL.
2. INFILL BETWEEN TOP AND BOTTOM WELDS WITH SEAL WELD.

PICKET

RAILING POST
WELDED CONNECTION

DETAIL 5 / NTS

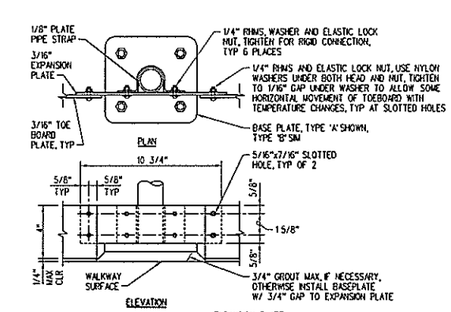

PLAN

ELEVATION

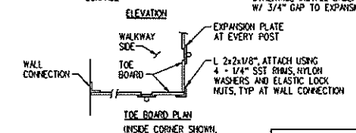

TOE BOARD PLAN
(INSIDE CORNER SHOWN, OUTSIDE CORNER SIMILAR)

NOTES:
1. TOE BOARD TO BE MOUNTED ON WALKWAY SIDE OF RAILING.
2. RHMS - ROUND HEAD MACHINE SCREW, AS SPECIFIED.

RAILING TOE BOARD

DETAIL 6 / NTS

PRELIMINARY ISSUED FOR INTERNAL REVIEW

C CM Z 00013 — LATEST REVISION A

PROJ.	REV. NO.	REVISION	INITIAL AND DATE: PRPD	LEAD ENG	CHKD/VERIF'D	APRV'D	APRV'D	APRV'D
SDU6	A	50% INFORMAL REVIEW	LT 01-31-12	01-31-12				

THIS DRAWING HAS BEEN FURNISHED BY THE SAVANNAH RIVER SITE. THE INFORMATION AND IMAGE HERE THEREON MAY NOT BE USED NOR THE DRAWING REPRODUCED WITHOUT WRITTEN PERMISSION OF THE PRIME CONTRACTOR. ALL REPRODUCTIONS IN WHOLE OR IN PART, INCLUDING VENDORS SHOP DRAWINGS, SHALL BEAR OR REFER TO THIS STAMP.

REFERENCE DRAWINGS

REFERENCE STANDARDS

UNITED STATES DEPARTMENT OF ENERGY
SAVANNAH RIVER SITE

BLDG NO.	SITE CLEARANCE NO.	DESIGN AREA NO.	DESIGN GROUP
451-6Z	N/A	Z451	CH2MHILL

TITLE
Z AREA
SALTSTONE DISPOSAL SITE
SDU 6
TANK DESIGN
STRUCTURAL
DETAILS

SCALE	SHP DRAWING NO.	SHEET NO.	LATEST REVISION
AS SHOWN	NA	1 OF 1	A

N.S. - 1 REF FILES YES NO

LEVELS 1234567890123456789012345678901234567890123456789012345678901234567890123

PSCo - 1 DRAWN BY CORCHIVINA L-3 LAST CADD REV. BY: DATE:
PLOT DATE 01-31-12 TIME

Sizes shown on this drawing is only applicable when plotted at 30"x42" (actual drawing size)