SRR-LWP-2014-00004
Revision 0
May 2014

Keywords:

DWPF Feed
Sludge Batches
Canisters

RETENTION: PERMANENT

SLUDGE BATCH PLAN 2014 IN SUPPORT OF SYSTEM PLAN REV. 19

J. M. Gillam

Savannah River Remediation
Liquid Waste Organization
Liquid Waste Planning
Aiken, SC 29808

Prepared for U.S. Department of Energy Under Contract No. DE-AC09-09SR22505

Approval

Author

J. M. Gillam, Sludge & Salt Planning — Date: 4/29/14

Technical Reviewer

H. B. Shah, Manager- Sludge and Salt Planning — Date: 4/30/14

K. D. Gilbreath, System Planning — Date: 5/1/14

Concurrence

B. A. Hamm, System Planning — Date: 5/1/14

Approval:

H. B. Shah, Manager-Sludge and Salt Planning — Date: 5/1/14

P. J. Hill, Manager-Liquid Waste System Planning — Date: 5-2-14

Table of Contents

1 Executive Summary 6
2 Introduction 9
3 Inputs and Assumptions 11
3.1 Aluminum Dissolution 11
3.2 Tank Farm Current Conditions 12
3.3 Future Sludge Batch Washing Assumptions 13
3.4 Assumptions for Additional Sludge 16
3.5 Sludge Modifier Addition 16
3.6 Assumptions for Sludge Removal 17
3.7 Assumptions for DWPF Processing 18
3.8 Sludge Batch Preparation Details 19
3.9 DWPF Processing 23
3.10 PCCS Modeling 23
3.11 DWPF Waste Acceptance Criteria 23
4 Canister Production and Batch Need Dates 28
4.1 Estimated Canisters and Need Dates 28
5 Risks and Issues 32
5.1 Equipment and Infrastructure Problems 32
5.2 Sludge Characterization Uncertainty 32
5.3 Sludge Behavior Uncertainty 32
5.4 New Programs or Delays in Currently Planned Programs 33
5.5 Sludge Processing Uncertainty 33
6 Conclusions and Recommendations 35
7 References 38

List of Tables

Table 1: Sludge Batch Decant Volumes from Tank 51 22
Table 2: SB9-23 WAC Value Estimation: NOx, Hg, IDP, and Canister Fissile 25
Table 3: SB9-23 WAC Value Estimation: Criticality and Hydrogen Generation 26
Table 4: SB9-23 WAC Value Estimation: Canister Heat, Gamma, and Neutron 27
Table 5: Canister Production and Sludge Batch Feed Dates 29
Table 6: Difference in Canisters Produced Rev. 19 vs. Rev. 18..... 36

List of Figures

Figure 1: Sludge Removal Sequence for Sludge Batch Preparation……21

List of Acronyms

ARP	Actinide Removal Process
CSSX	Caustic Side Solvent Extraction
CST	Crystalline Silicotitanate
DWPF	Defense Waste Processing Facility
HM	H-Modified PUREX Process
IDP	Inhalation dose potential
kg	kilograms
LTAD	Low temperature aluminum dissolution
LWSP	Liquid Waste System Plan
MCU	Modular CSSX Unit
MST	Monosodium Titanate
PCCS	Product Composition Control System
PRFT	Precipitate Reactor Feed Tank
PUREX	Plutonium Uranium Extraction process
Q-Time	Quiescent Time
R2O	Sum of Alkali Materials
SB	Sludge Batch
SCIX	Small Column Ion Exchange
SEFT	Strip Effluent Feed Tank
SMP	Submersible Mixer Pump
SOL	Sludge Oxide Loading
SPTK	System Planning Toolkit
SRAT	Sludge Receipt and Adjustment Tank
SRNL	Savannah River National Laboratory
SRS	Savannah River Site
TiO2	Titanium Dioxide
SWPF	Salt Waste Processing Facility
WAC	Waste Acceptance Criteria
WCS	Waste Characterization System
wt%	weight percent

1 Executive Summary

This Sludge Batch Plan validates the sludge processing sequence [Gillam, 2014] devised in concert with the overall future processing scheme recommended by the System Plan Revision 19 [Hamm and Chew, 2014]. It also includes an estimate of The Defense Waste Processing Facility (DWPF) feed compositions which are used to predict DWPF Waste Acceptance Criteria (WAC) compliance, projection of canisters produced upon completion of sludge and salt processing, and volumes of supernate generated and decanted in the course of processing sludge. In the course of devising a sludge processing sequence, insights to potential operational challenges and opportunities are obtained.

Liquid Waste Planning routinely produces long-range planning documents such as the Liquid Waste System Plan (LWSP) for the integrated Liquid Waste System. The Liquid Waste Planning group provides input to support the orderly planning of Liquid Waste System operation with regards to sludge batch preparation and qualification for feed to DWPF. Key outputs of the LWSP are sludge batch sequence and timing and DWPF canister production rate estimates. The Sludge Batch Plan supports those outputs and identifies associated program risks.

This document is intended for long-term planning and does not contain sufficient detail to guide operation of individual process steps. Any dates, volumes, and chemical compositions contained herein are planning approximations only. To guide actual execution of individual processing steps in the future, detailed plans will be developed. This document will be revised if significant changes occur in the planning bases that impact successful implementation of this Plan.

The System Plan devises a sequence of waste removal steps to best meet the goals, priorities, assumptions, and funding provided as inputs to that Plan. The Sludge Batch Plan builds further detail into the sludge processing sequence devised by the System Plan. The result is a verification of the feasibility of preparing the sludge batches in the way prescribed by the System Plan, sludge batch composition estimates to verify their processability by DWPF, and recognition of potential risks to be addressed.

In this Plan, DWPF produces canisters at a rate of 120 to 168 discrete canisters/year before the Salt Waste Processing Facility (SWPF) startup, as required to support the Salt Batch Plan. Sludge oxide loading (SOL) is projected at 36 wt% until after the SWPF tie-in outage in June through September 2018. After that outage, DWPF production is assumed to be 276 canisters/year at 40 wt% SOL. Melter replacement outages of 4 months each are assumed to occur beginning June 2016, June 2024, and June 2033. The plan assumes that during the next Melter replacement, ARP/MCU will also undergo necessary refurbishment of the contactors and replacement of the solvent. The Plan also assumes that supplemental canister storage is available beginning December 2018.

To the extent practical, this Plan utilizes the low temperature aluminum dissolution (LTAD) process to reduce the mass of sludge from high-aluminum sources. LTAD has been successfully performed for Sludge Batch (SB) 5 and SB6 and also on the Tank 12 sludge heel. Leachate from those dissolutions is being processed by the Actinide Removal Process (ARP) and the Modular CSSX Unit (MCU). SWPF is expected to be able to process the high-aluminum liquid decanted from the later dissolutions when blended with other tank farm solutions.

Aluminum dissolution will reduce the number of glass canisters otherwise produced, by reducing the sludge solids mass, increasing canister waste loading, and increasing DWPF melt rate.

LTAD is utilized for SB10 – SB13. Although it could possibly also become an option for some later sludge batches, in the overall System Plan there is insufficient space projected for aluminum leachate storage for higher aluminum sludge batches after SB13.

Sludge blending for makeup of sludge batches is devised to accommodate sludge movements for planned tank closure activities, to perform aluminum dissolution on high-aluminum content sludge from particular tanks, to wash the sludge as efficiently as possible, and to provide DWPF feed that will result in acceptable sludge processing and glass quality.

In the System Plan, spent Monosodium Titanate (MST) and strip effluent from ARP/MCU operation or SWPF operation is sent directly to DWPF. Small Column Ion Exchange (SCIX) processing is not part of this System Plan. Large Tank MST strikes are also not part of this system plan. Given the uncertainty of where and how oxalic acid cleaning will be applied to reduce tank heel volumes, potential bulk oxalic acid/sodium oxalate has not been included in the sludge batch modeling after SB9.

The System Plan calls for addition of sludge modifier (simulated sludge, iron, and/or Uranium 238) for SB12-SB18, SB20, and SB22. Three main factors contributed to addition of sludge modifiers in this plan

1. Maintain Al/Fe ratio of 0.6 or less,
2. Canister production rate of 276 per year to sustain salt processing rates of 6 to 9M gallons per year from 2022 through 2032, and
3. Assumption to maintain higher waste loading of 40% from 2019 through 2032.

Inclusion of the modifier is modeled in the System Planning Toolkit (SPTK). The additive form and the addition method have not yet been devised. This Plan does not model any impact of sludge modifier on sludge batch preparation in Tank 51. Therefore, Sludge modifier use will require further research and development including ways to reduce or eliminate the need of sludge modifier. Detailed discussion on sludge modifier and options to reduce or eliminate the need is provided in Section 3.5 of this report.

Washing is examined in detail through SB18 of this Plan. That washing includes 90% of the estimated existing unprepared sludge inventory. Since sludge batches 19-23 have smaller amounts of radioactive sludge and greater compositional uncertainty little can be confirmed or learned by attempting to model their preparation.

Differences in sludge batch sequencing, total number of canisters produced, and batch end dates between this Sludge Batch Plan and the previous Plan [Gillam and McIlmoyle, 2013] are mainly driven by the following:

(1) Tank 22 sludge removal will begin sooner (SB9) to alleviate storage constraints for the DWPF recycle stream.
(2) Tanks 4 and 7 will be used to store concentrated salt solution after their current supernate inventories are processed, so heel removal from Tanks 4 and 7 are deferred from near-term sludge batches.
(3) Reduced funding has limited canister production to that necessary to support a reduced ARP/MCU rate, until SWPF startup.
(4) ARP/MCU will process about 7M gallons of waste Beginning 2014 until SWPF startup, instead of 18.4M gallons, due to funding limitations.
(5) Tank 26 sludge will be used beginning SB10 instead of Tank 33 sludge. Tank 26 requires fewer resources than Tank 33 to prepare for bulk waste removal, and Tank 26 is now available for SB10 since it does not support 2F Evaporator operation.
(6) Tank 15 bulk waste removal is planned to begin December 2016 instead of June 2014.
(7) Tank 11 heel removal is planned to begin November 2018 instead of April 2015, due to lack of funding.
(8) Tank 14 bulk waste removal is planned to begin March 2023 instead of July 2016, due to lack of funding.
(9) Future sludge batches are assumed to be washed to 1.25 M supernate sodium concentration, instead of 1.5 M, based on additional experience with SB8 qualification.
(10) SCIX processing is not part of this Plan.
(11) There are 23 sludge batches rather than 21. The last five sludge batches are smaller and have a high proportion of tank heel solids and insoluble solids remaining from salt dissolution.
(12) Sludge modifier is added to SB12-18, SB20, and SB22 to support the SWPF processing rate.
(13) DWPF canister production is reduced in near-term years due to the reduced availability of canister storage locations. The canisters produced up to SWPF startup in 2018 are those needed to support the planned ARP/MCU operation.

2 Introduction

Cleanup initiatives at the Savannah River Site (SRS) include sludge processing. Sludge is the highest risk component of liquid waste since it contains the majority of the long-lived radionuclides in the SRS waste. SRS has been immobilizing sludge since 1996 with the startup of DWPF; the LW system has produced 3751 canisters as of January 2014.

In September 2010, the Melter was retrofitted with bubblers to circulate the molten glass. The bubblers have increased the DWPF (short-term) production rate to as high as 480 canisters per year as demonstrated in a month of August 2013 and are capable of supporting an overall rate of 276 canisters per year at SOL of 36 wt%. This plan assumes that process improvements will lead to an increase of SOL to 40 wt% at the time SWPF comes on line in October 2018.

The SPTK Ver. 13 (SPTK) [Hamm (A), 2014] is a linked set of Excel workbooks used to calculate composition and identify possible processing constraints for each sludge batch. DWPF WAC [Ray, 2013] and Product Composition Control System (PCCS) limits were also evaluated within the SPTK. The limits which are not met are identified for each sludge batch in Section 3.10 and 3.11. It should be noted that although the current SPTK model indicates that the assumed batch compositions, SOL, and canister production rates are feasible, SPTK calculation runs do not account for processing rates within the Sludge Receipt and Adjustment Tank (SRAT), Slurry Mix Evaporator, Melter Feed Tank, or Melter within DWPF.

This document is for planning purposes. The purpose of this document is to describe the Sludge Batch Plan in sufficient detail to establish project objectives and execution schedules. This Plan provides input on sludge batch sequence and timing and estimates of canister production numbers, wash water volumes, and concentrations of soluble species. It documents major risks, inputs, and assumptions associated with sludge processing.

Several studies have been conducted to better predict the quantity of sludge in the Tank Farms. Adjustment of this prediction has a significant impact on the number of future canisters to be produced [Hill, 2006]. The studies used tank waste sample data and empirical processing data from sludge batch vitrification. The first study quantified the magnitude of the disparity between Waste Characterization System (WCS) [Hester, 1996] predictions and measured sludge mass for sludge batches 1A through 4 [Elder and Hamm, 2006]. A second evaluation, "Estimating the Sludge Mass Remaining in SRS Waste Tanks after the Processing of Sludge Batch 4", performed a statistical analysis of the correlation between the WCS forecast and empirical experience for the first five sludge batches [Edwards, 2006]. A third study, "Sludge Characterization Model Using Dial-up Factors", analyzed sludge type, canyon processes, year of operation, existing sludge sample data, and the two studies mentioned above [Hamm and Elder, 2006]. The recommended sludge masses and compositions were developed by applying a series of dial-up factors to the WCS predictions. These 'recommended' dial-up masses were used in the previous version of the Sludge Batch Plan.

Based on lessons from Tank 13 waste removal, the 'recommended' dial-up factor for the projected sludge mass of H Area low activity waste has been scaled back to correspond to the original WCS mass for this Plan.

Other sludge masses in this Plan are re-estimated in some cases. Tank 39 was rebaselined to account for 91,000 kg of new sludge solids [WCS1.5, August 27, 2013]. Going forward, the System Plan assumes that 130,000 kg of additional future sludge solids from H-Canyon are received into Tank 39 through 2026.

The System Plan assumes that sludge modifier is added to Tank 40 feed as necessary to support SWPF feed rates. In total, 424,000 kg of insoluble iron and sludge modifier is added to the DWPF feed stream as part of SB12-SB18, SB20, and SB22.

Sludge mass estimates will continue to be evaluated as future waste removals and sludge batches are completed to determine whether general dial-up factors need to be readjusted. The extent of those evaluations will depend on the tank sampling, mappings, and sludge soundings performed.

This document is intended for long-term planning and does not contain sufficient detail to guide operation of individual process steps. Any dates, volumes, and chemical compositions contained herein are planning approximations only. To guide actual execution of individual processing steps in the future, detailed flowsheets will be developed. This document will be revised when significant changes occur in the planning bases that impact successful implementation of this Plan. Revisions to this document will be managed by issuing a revision to the document approved by all indicated organizations.

3 Inputs and Assumptions

Inputs and assumptions used in this Plan are summarized in the following sections. Assumptions are shown for aluminum dissolution, current Tank Farm conditions, sludge washing, amounts of additional sludge to be realized, sludge removal from storage tanks, and DWPF processing.

3.1 *Aluminum Dissolution*

Aluminum solids in the sludge are believed to be present in at least three forms – aluminum trihydrate or gibbsite, alumina monohydrate or boehmite, and aluminosilicate. Only the first two forms are soluble in caustic solutions. Aluminum dissolution is performed by adding 50 wt% NaOH to the process tank (Tank 51), while agitating the tank contents and heating to approximately 70 degrees Celsius for one month.

The LTAD process was successfully implemented for SB5, SB6, and Tank 12 heel removal achieving an estimated reduction of 310 to 344 canisters at 36% SOL. This plan assumes the use of LTAD for SB10 through SB13. This plan assumes no high temperature aluminum dissolution for sludge batch preparation (greater than 85 degrees Celsius).

Aluminum dissolution inputs and assumptions are as follows:

3.1.1 LTAD will be used for processing of the sludge from Tanks 15, 35, remaining heels in Tanks 11 and 13, and 110,000 kg from Tank 39. Some of the sludge from Tank 39 and none of the sludge in Tank 32 will be subjected to aluminum dissolution due to the projected lack of storage space for aluminum leachate.

3.1.2 Aluminum dissolution will be performed in Tank 51.

3.1.3 LTAD will dissolve 75% of the mass of the aluminum solids.

3.1.4 Enough 50 wt% caustic is added for LTAD that after dissolution, the [OH]/[Al] molar ratio in the supernate is at least 6.0, which is assumed to be sufficient to keep the aluminum dissolved through the subsequent washing.

3.1.5 Tank 51 will utilize conventional style slurry pumps, which have greater operating range than Submersible Mixer Pumps (SMPs) with respect to liquid height, fluid density, and slurry temperature.

3.1.6 A six inch separation between the settled sludge layer and the decanting jet suction will be employed to maximize the leachate decant volume.

3.1.7 Approximately thirty days of gravity settling are employed before leachate decanting for the purpose of settling calculations in this Plan.

3.2 *Tank Farm Current Conditions*

Assumptions specific to sludge recently or currently being processed or moved from storage tanks are as follows:

3.2.1 Sludge Tank waste volumes are those as of the beginning of September 2013.

3.2.2 Supernate compositions of sludge tanks, except for Tank 40, use the latest available Ntank sample database entries as of the beginning of September 2013. For Tanks 51, 40, 13, and 11, running material balances are employed to account for the impact of waste transfers since the time of the latest sampling.

3.2.3 The composition of the current Tank 40 SB8 supernate composition and solids concentration is based on the combination of the final SB7B heel characterization (from the WAPS sample taken in January 2012 [Bannochie, 2012], and adjusted for apparent water dilution from slurry pump bearing water by transfer material balances), combined with the characterized volume [Hay, 2013] transferred from SB8 into Tank 40. The calculated blend is also adjusted for subsequent water dilution from slurry pump bearing water by transfer material balances.

3.2.4 The Tank 51 solids content is determined from sample analysis [Pareizs, 2013]. The mass portion of those solids that are sodium oxalate is estimated from the bulk oxalic addition quantity to Tank 12, Tank 12 supernate analyses in the Ntank sample database, the Tank 12 transfer volumes transferred to Tank 51, and the sodium oxalate solubility [Kilpatrick, 1984].

3.2.5 The Tank 13 remaining solids mass has been roughly estimated at 30,000 kg, based on a mapping of the settled solids volume [Bhatt, 2013].

3.2.6 Tank 22 solids mass is derived from an inventory rebaseline [Shafer, 2013] that attributes the sounded historical sludge heights in Tank 22 to sludge entrained in the tank receipts. This Plan assumes that the solids inventory is just two-thirds of that “high-side” conservative estimate. That rebaseline also provides the basis for the estimated radiolytic heat inventories.

3.2.7 Sludge tank solids masses other than those of Tanks 40, 51, 13, and 22 are from the adjustment of the WCS1.5 inventory database, adjusted using the chosen “dial-up” factors, as described in Section 2.

3.2.8 The Tank 40 radiolytic heats results from a running material balance beginning at the time of the Tank 40 SB7b slurry sample, December 2012 [Crawford and DiPrete, 2013], used for radiolytic heat calculation. The material balance accounts for subsequent feed transfers to DWPF and the SB8 receipt from Tank 51. That receipt from Tank 51 uses the radiolytic heat determined by the WCS1.5 database as of April 15, 2013.

3.2.9 The Tank 13 and Tank 51 radiolytic heats, derived from material balances that account for individual transfers into and from those tanks, are in agreement with the values determined by WCS 1.5 [WCS1.5, August 27, 2013].

3.2.10 Initial radiolytic heats of all tanks other than Tanks 22, 40, 13, and 51 come from WCS1.5 [WCS1.5, August 27, 2013].

3.2.11 SB9 is undergoing preparation, and is awaiting transfer of slurry from Tank 22 and additions of Sodium Reactor Experimental (SRE) waste from H-Canyon.

3.3 *Future Sludge Batch Washing Assumptions*

Future sludge batch washing for SB9 through SB18 is modeled using general assumptions, as follows:

3.3.1 All Sludge batches are prepared in Tank 51, and then stored in Tank 40.

3.3.2 SB9-18 are washed to 1.25 M sodium in the supernate.

3.3.3 Settling characteristics of SB10 through SB18 are estimated by:

- Determining the mass of “high-heat” HM sludge solids, in the sludge batch (sludge from Tanks 11, 12, 14, 15, 32, 35, or 39). Any mass originating from Tank 13, Tank 22, or Tank 43 is considered to be half “high-heat” HM for settling purposes.

- Settling of HM sludge without aluminum dissolution is projected using the pre-dissolution SB4 / SB5 settling model [Gillam, 2008].

- Settling of the post-dissolution HM sludge is projected using the observed SB4/pre-dissolution SB5 settling model [Gillam, 2008] using a mass input to the model that only credits dissolution of 42% of the actual mass to be dissolved. This is from SB5 dissolution experience.

- Solids other than HM solids in the sludge are assumed to settle like sludge from the Plutonium-Uranium Extraction Process (PUREX), which is projected using a PUREX settling model [Lee, 1996] with an H_{∞} input corresponding to a 20-day settled compaction of 292 grams of insolubles per liter of slurry [Ades, 2010].

- Settling of combinations of "HM" and "PUREX-like" solids is modeled using a technique that assumes independent settling behavior two different sludges [Gillam, 2013].

3.3.4 Settling of SB9 is projected by:

- Assuming that the sludge behaves according to the settling results derived from SB8 experience. SB8 settling is fitted to the "Poloski" model [Gillam, 2013], and adjusted to the appropriate solids mass for SB9.

- When sodium oxalate solids are also present, they are assumed to behave like PUREX solids per the PUREX settling model [Lee, 1996] with an H_{∞} input corresponding to a 20-day settled compaction of 292 grams of insolubles per liter of slurry [Ades, 2010]. The settling of the combination of "SB8-like" solids and "PUREX-like" solids is modeled using a technique that assumes independent settling behavior of the two sludge types [Gillam, 2013].

3.3.5 Slurry pump run frequencies for Tanks 40 and 51 are estimated using the "gas release" quiescent times (Q-times) calculated as prescribed in the CSTF Flammability Control Program [Hansen (A), 2013].

3.3.6 Available sludge settling time is the projected Q-time, less the time required to reposition the decanting jet (or pump), execute the decant transfer, perform subsequent Q-time pump runs, plus some operating margin to ensure that the decant can be completed before the pump runs must begin. This difference between the Q-time and settling time is managed to be at least six days.

3.3.7 Since 20-day settled sludge heights of the assembled SB9 in Tanks 51 is less than 90 inches, 50% retention of all generated hydrogen is assumed between pump runs. Other batches have over or near the 90 inch settled height, so 100% retention is assumed [Hansen (A), 2013].

3.3.8 Jet decants to evaporator system tanks are generally from a tank elevation at least 24 inches above the projected turbidity level to comply with Evaporator Feed Qualification Program [Le, 2010] requirements. Separations of 12 inches are assumed for the final decants in the preparation of a few of the sludge batches, to ameliorate the low solids concentrations. These decants would probably need to be routed to tanks that are not part of evaporator systems. No significant sludge entrainment is expected for these decants.

3.3.9 The waste tank high liquid level conductivity probes in Tanks 51 and 40 must be at least eight inches above the waste level.

3.3.10 Corrosion inhibitor adjustments are assumed as necessary to comply with the Corrosion Control Program [Hansen (B), 2013]. Addition of 50 wt% sodium hydroxide and 40 wt% sodium nitrite is assumed. A sufficient margin over the minimum inhibitor requirements for final washed sludge is provided by a [NO2]/[NO3] molar ratio of 1.85 or greater.

3.3.11 A supernate temperature of 40° C is assumed when applying the Corrosion Control Program [Hansen (B), 2013] and Flammability Control Program [Hansen, 2012] criteria. Higher temperatures are encountered during LTAD, but due to frequent slurry pump operation, no additional corrosion inhibitor is required.

3.3.12 Decay of radioactive elements is accounted in the SPTK and used to determine the radiolytic heats that result in hydrogen generation during sludge washing.

3.3.13 Evaporator capacity is maintained to support the Plan.

3.3.14 Per the System Plan [Chew and Hamm, 2014] sludge batches must be prepared within 15 month periods.

3.3.15 SB19 through SB23 will be required to disposition remaining sludge, residual tank waste heels, and salt insolubles, after bulk waste removal is almost complete. Washing for these batches was not analyzed in detail due to the uncertain composition and behavior. Also, their smaller size means that they are much less likely to represent a washing process constraint.

3.3.16 Sodium oxalate dissolution during sludge washing is modeled according to a Savannah River National Laboratory (SRNL) study [Kilpatrick, 1984].

3.3.17 Evaporator concentrate is used as needed in order to reduce bulk chemical addition requirements to Tank 51 while maintaining compliance with the Corrosion Control Program [A. G. Hansen (B), 2013]. Its composition is assumed to be that of the Ntank37 sample database August 2013 sample.

3.4 *Assumptions for Additional Sludge*

3.4.1 Assumptions pertaining to anticipated additional sludge being processed are as follows:

3.4.2 The System Plan assumes that sludge modifier is added to Tank 40 feed as necessary to support SWPF processing volumes. In total, 424,000 kg of modifier is added to the DWPF feed stream as part of SB12-SB18, SB20, and SB22. A modifier using simulated PUREX sludge has been assumed in targeting acceptable physical properties and a favorable iron to aluminum ratio for the DWPF feed.

3.4.3 Tank 39 receives new receipts from H-Canyon at the rate of 10,000 kg of insoluble solids per year until July 2026. The impact of the associated additional liquid on the washed sludge batch composition will be slight, so is not accounted for. However, any future additions to sludge batches will be evaluated before being approved for impacts to the washing, DWPF criticality, and total fissile limit in glass.

3.5 *Sludge Modifier Addition*

The System Plan calls for the addition of sludge modifiers (simulated sludge, iron, and/or Uranium 238) for SB12–SB18, SB20, and SB22. Three main factors contribute to the need for addition of sludge modifiers in this plan:

- Maintain an aluminum to iron (Al/Fe) ratio of 0.6 or less
- Support canister production rate of 276 per year to sustain salt processing rates of 6 to 9 million gallons (Mgal) per year from 2022 through 2032, and
- Maintain waste loading of 40% from 2019 through 2032.

Processing Sludge Batches 5 and 6 demonstrated that maintaining an Al/Fe ratio less than 0.6 helps sludge settle faster thereby enabling sludge washing to be performed within the scheduled duration for sludge batch preparation. Maintaining the proper Al/Fe ratio also helps to attain canister waste loadings of 36% and higher. Therefore, in this plan and in previous plans, sludge batches are planned with Al/Fe ratios close to 0.6 through the addition of sludge modifiers when necessary. The major portion of iron sludge (PUREX) will have been depleted by 2022 in preparing the sludge batches. Sludge remaining after this time (mainly HM) will be high in aluminum, therefore, iron based sludge modifier was used in this plan for the batches beyond 2022.

This plan assumes a salt processing rate of 4 Mgal/yr in the first year of processing (2019), 3 Mgal/yr for the next two years (2020, 2021), 6 Mgal/yr from 2022 through 2024, and 9 Mgal/yr from 2024 to 2032. A canister production rate of 276 cans per year is necessary to support salt processing rates of 6 to 9 Mgal/yr. This higher canister production rate requires preparing batches faster, depleting the inventory of iron sludge, and thus requires addition of sludge modifiers.

Historically, high aluminum sludge negatively affected processability at DWPF at higher waste loading. Thus, a lower Al/Fe ratio is required to maintain acceptable productivity. Since the major portion of iron sludge is going to be used up by 2022, addition of sludge modifiers was needed.

Inclusion of the modifier is modeled in the System Planning Toolkit (SPTK) as dry material added to Tank 51 during sludge batch assembly. The additive form and the addition method have not yet been devised. This Plan does not model any impact of sludge modifier on the physical aspects of sludge batch preparation in Tank 51.

While sludge modifier use is currently in the Plan, options to reduce or eliminate the need of sludge modifier include:

- Develop a frit formulation that will enable processing high aluminum sludges at higher waste loading at DWPF
- Develop sludge washing methods to reduce high aluminum sludge batch preparation time (e.g., Rotary Micro-filtration)
- Develop a sludge modifier blend that reduces the quantity of modifier while reducing settling time and maintaining acceptable rheology
- Increase aluminum to iron ratio >0.6
- Develop methods to process higher strip effluent per CPC batch at DWPF

3.6 *Assumptions for Sludge Removal*

The following assumptions pertain to the strategies and methods of waste removal from storage tanks, which impact the waste composition and process during sludge batch preparation:

3.6.1 Saltcake dissolution from sludge tanks is modeled when applicable, in order to project supernate composition during sludge removal. Amounts and composition of salt in sludge tanks are from the WCS database of August, 2013 [WCS1.5 August 27, 2013].

3.6.2 It takes 1.93 gallons of water to dissolve one gallon of saltcake, resulting in a combined post-dissolution volume of 2.8 gallons [Nguyen, 2004].

3.6.3 Sludge removal is to be accomplished with SMPs, except in the case of Tanks 11 and 22.

3.6.4 SMPs require 120 inches of suction head to operate.

3.6.5 Sludge solids have a density of 2.4 g/ml.

3.6.6 Insoluble solids concentration for sludge slurry transfers into Tank 51 will be no greater than 8 wt%.

3.6.7 About 5000 kg of insoluble solids are assumed to represent the residual quantity for future sludge heel removal.

3.6.8 Transfers to and from sludge tanks in the transfer modeling are managed to maintain compliance with the Corrosion Control Program [A. G. Hansen (B), 2013].

3.6.9 Concentrated salt solution is added to some sludge tanks during their bulk waste removal period based on the System Plan transfer sequence [Hamm (A), 2014]. For the sludge batch preparation modeling, the composition of that stream is assumed to be like that of Tank 37 (evaporator concentrate). Details of each such adjustment are noted in the sludge preparation spreadsheets [Gillam, 2014].

3.7 *Assumptions for DWPF Processing*

The following assumptions pertain to the DWPF processing rate:

3.7.1 Dilution of DWPF sludge slurry feed from Tank 40 due to slurry pump bearing purge water is not accounted for.

3.7.2 Canister production rates before SWPF startup for this Plan are limited to the amount to support ARP/MCU production, and range from 120 to 168 canisters/year until SWPF startup in December 2018. After SWPF startup, a rate of 276 canisters/year is maintained until the sludge waste inventory is reduced to only residual heel volumes in FY33.

3.7.3 Waste loading is assumed to be 36% SOL from now until after the SWPF tie-in outage ending in September 2018. By that time, DWPF process improvements will be implemented to increase SOL levels at DWPF to 40 wt%. SB21, SB22, and SB23 have the highest fraction of residual tank heels, and are assumed to have waste loadings of 30%, 30%, and 36 % SOL, respectively.

3.7.4 DWPF outages of 4 months each are assumed to occur beginning 6/1/16 (Melter replacement), 6/1/18 (SWPF tie-in), 6/1/24 (Melter replacement), and 6/1/33 (Melter replacement).

3.7.5 Supplemental canister storage will be available in December 2018.

3.7.6 Frit 803 is selected for glass compositions of all batches in this Plan. During qualification of a specific batch it is possible that a different frit will be used to meet the glass acceptance constraints.

3.7.7 Strip effluent is received in the Strip Effluent Feed Tank (SEFT) from both SWPF and MCU. Washed MST/sludge slurry is received in the Precipitate Reactor Feed Tank (PRFT).

3.7.8 The impact of future neptunium or plutonium campaigns by H-Canyon operations beyond SB9 are currently unknown, and not accounted for in the DWPF feed stream. Any proposed special neptunium or plutonium campaigns will be evaluated for impacts to the Sludge Batch Plan, ensuring that the limit of total fissile of 897 g/m^3 in glass and DWPF criticality constraints are met.

3.8 *Sludge Batch Preparation Details*

Excel spreadsheets are used to model a corresponding set of sequential material balances that track the movement of sludge slurry to and from waste removal tanks, to preparation of sludge batches in Tank 51, and to feed Tank 40 in a way that estimates interim and final quantities of insoluble sludge solids, supernate, associated alpha and beta-gamma heat rates, supernate composition, and other parameters that correspond to operating limits and constraints. In addition to transfers, these “Washing Spreadsheets” [Gillam, 2014] model chemical adjustment, aluminum dissolution, solids settling, hydrogen generation, and batch washing. This modeling demonstrates the feasibility of bringing the prescribed sludge batch ingredients to the target composition, identifies potential processing constraints, and provides supernate compositions used for projected glass evaluations.

The current sludge mass inventory used is based on the "recommended dial-up estimates" [Hamm and Elder, 2006]. Based on experience from Tank 13 bulk waste removal, dial-up factors for H Canyon low heat waste streams to the Tank Farm were removed beginning with the System Plan Rev. 18. Tanks 13, 22, 39, 40, and 51 sludge mass inventories have been updated in accordance with the latest available samples, sludge volume mappings, and transfer data, as described in Section 3.2.

Several key inputs to this modeling are specified by an overall liquid waste transfer sequence [Hamm (A), 2014], [Hamm (B), 2014] devised to meet the key input bases and assumptions of the System Plan [Chew and Hamm, 2014]. This sequence considered volume constraints, processing rates, and key compositional constraints. The information therein utilized for this Sludge Batch Plan includes the sequence of transfers to remove sludge stored in sludge tanks, the source and quantity of solids included in each sludge batch, a description other additions to sludge tanks assumed when managing waste volumes, and the quantity of aluminum compounds dissolved in each sludge batch.

The modeling for this Sludge Batch Plan in turn verifies that the planned batches are manageable, and determines the final washed composition of each prepared batch.

Those batch characterizations are used as inputs to the SPTK to project compositions for the sludge batch blends (including any sludge modifier), and the resultant glass compositions in DWPF.

The plan modeled for processing and blending of sludge feed, including batch aluminum dissolution, is shown in Figure 1 in an abbreviated schematic depicting the sources of sludge for each sludge batch and each aluminum dissolution batch. A minor deviation from sequence proposed in the final version of the System Plan sequence [Hamm (A), 2014] is that most of Tank 11 sludge is transferred into Tank 13 in time for inclusion in SB13, instead of in time for SB12. This will not significantly alter the final SB12 or SB13 washed supernate compositions used by the SPTK.

The size and number of decants to prepare the sludge in Tank 51, including those for sludge concentration/washing and for LTAD leachate removal, are listed in Table 1. For each sludge batch of the Plan washed, the number and total decant volumes are given. Sometimes the washing strategy modeled involved directing some concentration/washing decants to sludge storage tanks to utilize for removal of sludge for a subsequent sludge batch. This comprised 14% (SB9-SB17) of the decant volume generated from concentration/washing. That amount would not comprise part of the immediate evaporator load.

Figure 1: Sludge Removal Sequence for Sludge Batch Preparation

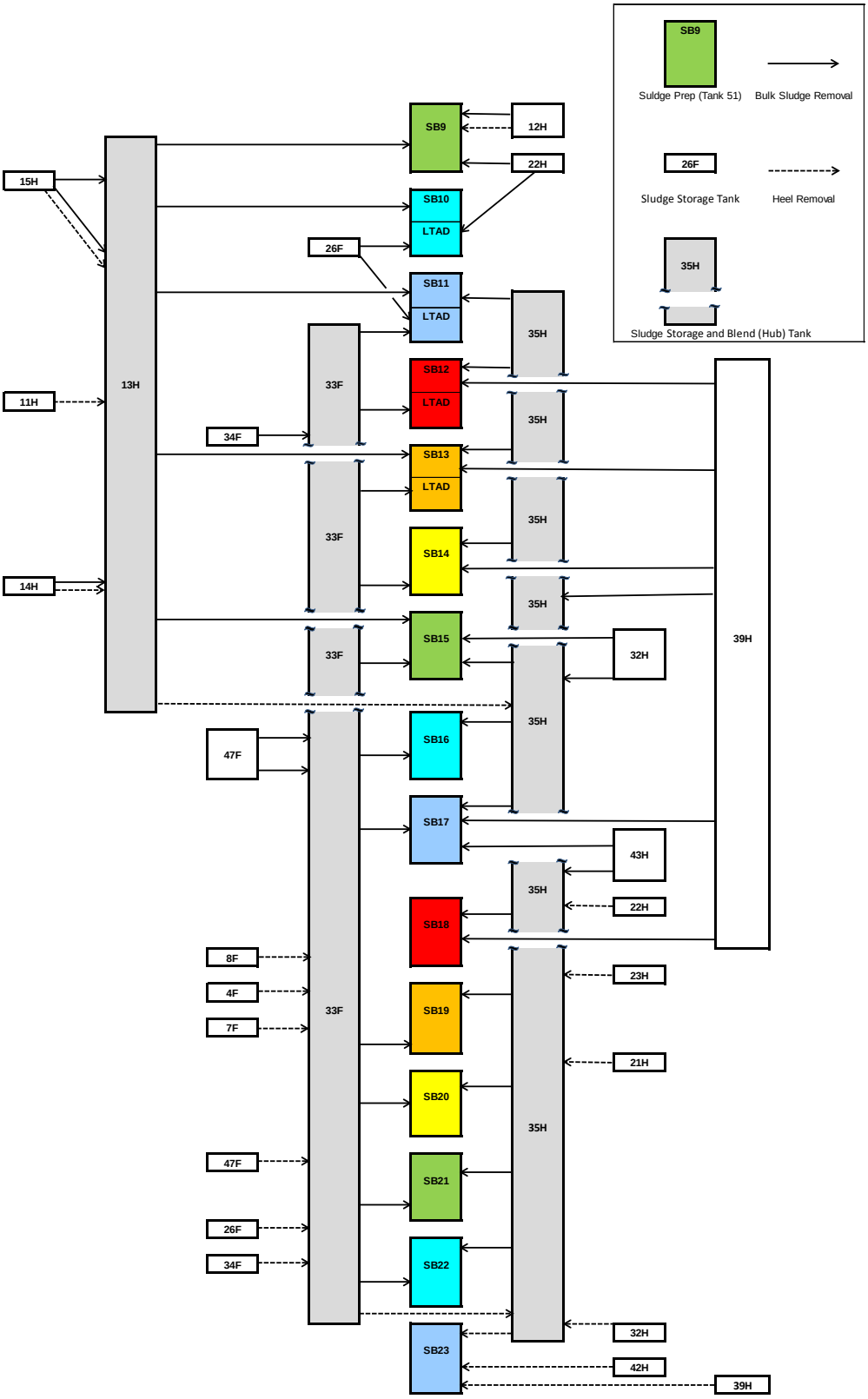

Table 1: Sludge Batch Decant Volumes from Tank 51

SB No.	Source/Reason	Volume (gallons)
9	Washing and Supernate Removal Decants Remaining (5)	1,485,000
10	Washing and Supernate Removal Decants (10)	1,775,000
	Aluminum Leachate (1)	491,000
11	Washing and Supernate Removal Decants (14)	2,720,000
	Aluminum Leachate (1)	388,000
12	Washing and Supernate Removal Decants (17)	1,319,000
	Aluminum Leachate (2)	368,000
13	Washing and Supernate Removal Decants (11)	1,703,000
	Aluminum Leachate (1)	417,000
14	Washing and Supernate Removal Decants (8)	1,551,000
15	Washing and Supernate Removal Decants (10)	1,956,000
16	Washing and Supernate Removal Decants (11)	2,370,000
17	Washing and Supernate Removal Decants (10)	1,555,000
18	Washing and Supernate Removal Decants (7)	1,354,000

3.9 *DWPF Processing*

In this Plan, DWPF produces canisters at a rate of 120 to 168 discrete canisters/year before SWPF startup, as required to support the Salt Batch Plan. SOL is projected at 36 wt% until after the SWPF tie-in outage in June through September 2018. After that outage, DWPF production is assumed to be 276 canisters/year at 40 wt% SOL until processing of the final sludge batches SB21-SB23 that have a high fraction of residual tank heel material. Melter replacement outages of 4 months each are assumed to occur beginning June 2016, June 2024, and June 2033.

Assumptions pertaining to DWPF processing of feeds are given in Section 3.6.

3.10 *PCCS Modeling*

The PCCS modeling algorithms from the SPTK [Hamm, 2014] are used to determine whether each sludge batch (including frit) as currently planned produces acceptable glass. Frit 803 is utilized for all batches in this Plan.

Total MST and strip effluent additions from SWPF and ARP/MCU are added to the SRAT on a monthly basis. This is the most logical approach, as the System Plan Rev. 19 [Hamm and Chew, 2014] calls for SWPF and ARP/MCU additions to be made incrementally during the batches.

The PCCS algorithm analyzes high and low liquidus temperatures, high and low viscosities, homogeneity (minimum amount of aluminum/alkaline oxides in the sludge), R2O (sum of alkali materials), and glass solubility limits (a maximum wt% is allowed in glass for certain compounds, such as TiO2) [Ray, 2013]. Homogeneity constraint was not met for SB9 through SB14. SB14 through SB20 did not meet the TiO2 limit. SB23 failed low viscosity, homogeneity, and nephaline limits [Hamm (A), 2014].

Although several PCCS constraints are not met with the assumptions in this Plan, in the past PCCS constraints such as homogeneity have been relaxed as a result of paper studies at SRNL [Raszewski and Edwards, 2009]. Before startup of SWPF in 2018, further studies will be required to reduce those PCCS constraints which are challenged in this Plan, especially the 2 wt% TiO2 limit. Use of frits other than Frit 803, refining the limits and logic in the PCCS modeling algorithms, and revisions to processing strategy will allow all PCCS constraints in future batches to be met. As per our current practice, each batch should be evaluated by SRNL to ensure PCCS limits are met.

3.11 *DWPF Waste Acceptance Criteria*

Several DWPF WAC criteria are evaluated using the SPTK [Hamm (A), 2014]. These criteria include NO_x emissions, Hg concentration, canister heat generated due to Tank 40 sludge transfers, gamma shielding, neutron shielding, inhalation dose potential (IDP),

nuclear criticality limits, radiolytic hydrogen generation, and fissile mass per cubic meter of glass. Although there are several other criteria included in the DWPF WAC, some must be directly measured by SRNL during sludge batch flowsheet and glass qualification runs and cannot be accurately estimated. These criteria are not analyzed in this Plan.

The SPTK Engineering Evaluations Workbook [Hamm (A), 2014] is used to evaluate compliance to WAC limits. Each limit is evaluated on a monthly basis in the DWPF Engineering Evaluations Workbook. To determine slurry volumes, insoluble solids wt% and slurry specific gravity are estimated using the same generic value for each batch. These insoluble solids wt% and slurry specific gravity values were compared to the washing spreadsheet [Gillam, 2014] values and deemed comparable.

It is estimated that the WAC limits that have been evaluated meet the acceptance criteria. Table 2 shows averages of monthly values for SB8-23 for NOx Emissions, Hg Concentration, IDP, and Canister Fissile. Based on assumptions of wt% insoluble solids, specific gravity and supernate concentration, the limits for these acceptance criteria are met.

Table 2: SB9-23 WAC Value Estimation: NOx, Hg, IDP, and Canister Fissile

	NO_x Emissions (Tank 40 Contribution)	Hg Concentration (Tank 40 Slurry)	Inhalation Dose Potential (Tank 40 Slurry)		Canister Fissile Limits (all contributors)
Batch	≤103.52 ton/yr	< 21 g/l	≤2.47E8 total rem/gal	≤1.34 Ci Cs-137/gal	(≤897 g fissile/m3) 0.61 kg fissile/can
SB9	29.8	2.3	1.8E+07	0.4	0.2
SB10	38.1	2.4	2.0E+07	0.4	0.2
SB11	41.5	3.1	3.5E+07	0.5	0.3
SB12	53.1	4.7	9.2E+07	0.7	0.4
SB13	53.6	4.9	1.2E+08	0.9	0.4
SB14	43.9	3.5	1.3E+08	0.9	0.5
SB15	46.5	4.2	9.8E+07	0.6	0.3
SB16	43.8	3.3	7.8E+07	0.4	0.2
SB17	43.7	3.4	9.1E+07	0.4	0.3
SB18	43.7	3.5	8.9E+07	0.4	0.2
SB19	42.7	3.3	8.1E+07	0.4	0.2
SB20	40.6	1.9	4.4E+07	0.2	0.1
HSB21	18.7	1.5	3.3E+07	0.2	0.1
HSB22	18.6	0.8	2.1E+07	0.1	0.1
HSB23	21.3	2.4	3.8E+07	0.2	0.1

Table 3 shows the estimated WAC calculations for Criticality Limits and Radiolytic Hydrogen Generation. The acceptance limits for all of these criteria are met.

Table 3: SB9-23 WAC Value Estimation: Criticality and Hydrogen Generation

	Criticality Limits (Tank 40 Slurry)					Radiolytic H_2 generation (SRAT)
	≤0.59 g Pu-239 Eq./gal.	Ratio of Weight of Fe/Pu-239 ≥ 160	wt% U-235 Eq. Enrichment ≤0.93% or ≤5% with Mn/U-235 Eq. ≥70	Ratio of Weight of Mn/U-235 ≥ 70	Ratio of Mass of Pu-240/Pu-241 >1	≤8.95E-5 Cu. Ft./hr/gal
SB9	0.1	1446	0.77%	153	48	1.43E-05
SB10	0.1	962	0.50%	213	46	1.41E-05
SB11	0.1	672	0.20%	93	27	1.79E-05
SB12	0.2	493	0.22%	77	15	2.85E-05
SB13	0.2	482	0.24%	63	14	3.62E-05
SB14	0.2	438	0.27%	56	13	4.05E-05
SB15	0.1	765	0.35%	54	15	3.20E-05
SB16	0.1	817	0.51%	140	16	2.56E-05
SB17	0.1	899	0.82%	108	14	2.70E-05
SB18	0.1	950	0.83%	103	15	2.63E-05
SB19	0.1	1029	0.81%	111	16	2.51E-05
SB20	0.1	1907	0.82%	412	17	1.83E-05
HSB21	0.1	2241	0.72%	525	20	6.36E-06
HSB22	0.0	3173	0.41%	844	28	4.14E-06
HSB23	0.1	1604	0.62%	221	33	7.40E-06

Table 4 shows the estimated WAC calculations for Canister Heat generation based on Tank 40 contribution and all contributors, gamma shielding and Neutron Shielding. All these criteria's meet the acceptance limit

Table 4: SB9-23 WAC Value Estimation: Canister Heat, Gamma, and Neutron

	Canister Heat Generation (Tank 40 Contribution)	Canister Heat Generation (All contributors)	Gamma Shielding (for Tank 40 Slurry)		Neutron Shielding (for Tank 40 Slurry)
	≤437 Watts/canister	≤834 Watts/canister	≤3.7 mR/hr/g IS	≤4070 mR/hr/gal	≤1.50E-3 Ci Alpha Emitters/g IS
SB9	55	85	0.3	173	2.09E-04
SB10	58	95	0.3	155	2.28E-04
SB11	89	122	0.5	254	3.91E-04
SB12	133	176	0.7	381	1.06E-03
SB13	157	218	0.9	457	1.39E-03
SB14	155	237	0.9	465	1.50E-03
SB15	110	195	0.6	307	1.14E-03
SB16	76	159	0.4	203	9.03E-04
SB17	82	163	0.4	217	1.07E-03
SB18	79	158	0.4	206	1.04E-03
SB19	74	152	0.4	195	9.50E-04
SB20	42	116	0.2	110	5.12E-04
HSB21	36	36	0.2	86	3.85E-04
HSB22	24	24	0.1	57	2.39E-04
HSB23	37	37	0.2	97	4.37E-04

Several risks to future sludge processing have been identified and evaluated against the WAC criteria. Uncertainty remains as to total sludge mass in the tanks, sludge compositions, processability, and supernate concentrations. Heel batch compositions (HB19-23) may pose future challenges as their makeup is not well-known at this time.

If WAC limits are expanded due to process improvements, improved analytical analyses, or reducing the waste loading, a larger margin for error would be provided for future sludge batches.

4 Canister Production and Batch Need Dates

Estimates of the total number of canisters produced from each sludge batch and batch need dates are shown in the following section. Information contained herein is to be used as an input to the LWSP.

The Sludge Batch Plan continues to evolve as new technologies are evaluated for reducing the total mass of solids sent to DWPF and increasing the rate at which the sludge is processed. This Plan includes detailed washing calculations and rearrangement of the waste removal plans shown in the previous Sludge Batch Plan.

4.1 *Estimated Canisters and Need Dates*

Table 5 provides the estimated number of canisters produced from each sludge batch and batch need dates. The aluminum dissolution process is modeled for SB10 through SB13 to provide processible sludge feed and to reduce the canisters poured, shortening the life cycle. It is to be noted that the waste loadings listed for each batch are assumed. The source tanks and Sludge Removal Sequence (Figure 1) should be viewed for clarification on how hub tanks are utilized to prepare sludge batches.

Producing canisters requires washing sludge feed batches in time for each new batch to be ready when sludge in the previous batch has been made into glass. This washing schedule requires maintaining enough tank space to support continued evaporator operations to receive and evaporate decants from sludge washing in a timely manner, ensuring that canister production is not interrupted.

Melter #2 replacement outage is shown beginning in June 2016 for planning purposes. SWPF tie-ins will occur in June through September of 2018. The following Melter replacement outages are planned beginning in June of 2024 and June of 2033. Two one-week bubbler replacement outages each year are accounted for as part of the attainment for DWPF (no bubbler replacement outages are planned for Melter replacement years).

Table 5: Canister Production and Sludge Batch Feed Dates

Batch	Batch Material Source Tanks (a)	DWPF WL% (e)	Production Rate Cans/year	Total Projected Canisters	End Date (b)
Cans thru Apr 2013 (FY96 thru part of FY13)	SB1A, SB1B, SB2, SB3, SB4, SB5, SB6, SB7A,SB7B Tks 1, 2, 3, 5, 6 via Tk7 Tks 8, 17, 18, 21, 22 Tks 11, 12 Tk15 via Tk42 Tks 4, 7, 12 Tk13, Tk12 Heel Removal			3629	
SB8 (FY13 thru end of batch)	Tk13, Tk12 Heel Removal	0.36	various	484	Feb. 2016
SB9	Tk13, Tk12 Chemical Cleaning, Tk22 solids from DWPF	0.36	various	51	May 2016
DWPF Melter Replacement June 2016 thru September 2016					Sep. 2016
SB9 (to completion)	Same as above	0.36	various	268	Feb. 2018
SB10 (LTAD) (c)	Tk13, Tk26, Tk22 Solids from DWPF Tk15 (via Tk13)	0.36	various	60	May 2018
SWPF Tie-In Outage June 2018 thru September 2018					Sep. 2018
SB10 (to completion)	Same as above	0.4	276	276	Sep. 2019
SB11 (LTAD)	Tk13, Tk35, Tk26, Tk33 Tk15 (via Tk13) Tk10, Tk15 Heel Removal, Chemical Cleaning (via Tk13)	0.4	276	345	Dec. 2020
SB12 (LTAD)	Tk13, Tk35, Tk39 Tk33, Sludge Modifier Tk11 Heel Removal, Chemical Cleaning (via Tk13)	0.4	276	345	Mar 2022
SB13 (LTAD)	Tk13, Tk35, Tk 39 Tk33, Sludge Modifier Tk9 Heel Removal, Chemical Cleaning (via Tk13) Tk34 (via Tk33)	0.4	276	345	June 2023
SB14	Tk13, Tk35, Tk39 Tk33, Sludge Modifier	0.4	276	253	May 2024
DWPF Melter Replacement June 2024 thru September 2024					Sep. 2024
SB14 (to completion)	Same as above	0.4	276	92	Jan. 2025
SB15	Tk13, Tk32, Tk35 Tk33, Sludge Modifier Tk14 (via Tk13) Tk14 Heel Removal, Chemical Cleaning (via Tk13) Tk39 (via Tk35)	0.4	276	345	Apr. 2026
SB16	Tk35, Tk33, Sludge Modifier Tk13 Heel Removal, Chemical Cleaning (via Tk35) Tk47 (via Tk33) Tk32 (via Tk35)	0.4	276	345	July 2027

Table 5: Canister Production and Sludge Batch Feed Dates (Continued)

Batch	Batch Material Source Tanks (a)	DWPF WL% (e)	Production Rate Cans/year	Total Projected Canisters	End Date (b)
SB17	Tk35, 39 Tk33, Tk43, Sludge Modifier Tk47 (via Tk33)	0.4	276	345	Oct. 2028
SB18	Tk35, Tk39 Tk33, Sludge Modifier Tk43, Tk22 (via Tk35) Tk8 Heel Removal, Chemical Cleaning (via Tk33)	0.4	276	299	Nov. 2029
SB19	Tk35, Tk39 Tk33, Sludge Modifier Tk 1, 2, 3 Heel Removal (via Tk7 and Tk33) Tk 1, 2, 3 Chemical Cleaning (via Tk7 and Tk33) Tk4 Heel Removal, Chemical Cleaning (via Tk33) Tk7 Heel Removal (via Tk33)	0.4	276	184	July 2030
SB20	Tk35, Tk33, Sludge Modifier Tk7 Chemical Cleaning (via Tk33) Tk21, Tk24 (via Tk35)	0.4	276	667	Dec. 2032
HSB21 (accounting for the heels) (d)	Tk35, Tk33, Sludge Modifier Tk28, Tk45, Tk46, Tk47 Heel Removal, Chemical Cleaning (via Tk33) Tk27 Heel Removal (via Tk33)	0.3	30	13	May 2033 (f)
DWPF Melter Replacement June 2033 thru September 2033					Sep. 2033
HSB21 (accounting for the heels) (d) (to completion)	Same as above	0.3	30	30	Sep. 2034 (f)
HSB22 (accounting for heels) (d)	Tk35, Tk33, Sludge Modifier Tk26, Tk34, Tk44 Heel Removal, Chemical Cleaning (via Tk33) Tk27 Chemical Cleaning (via Tk33)	0.3	44	117	May 2037 (f)
HSB23 (accounting for heels) (d)	Sludge Modifier Tk35, Tk41, Tk42, Tk39 Heel Removal, Chemical Cleaning Tk25 Heel Removal, Chemical Cleaning (via Tk33) Tk33, Tk30, Tk37, Tk29, Tk31, Tk32, Tk36 Heel Removal (via Tk35) Tk33, Tk30, Tk37, Tk29, Tk31, Tk32, Tk36 Chemical Cleaning (via Tk35)	0.36	67	89	Sep. 2038 (f)
Other(d)	Tk38, Tk51 cleaned to Tk43 Tk43 cleaned to Tk40 Tk40, Tk49 are cleaned directly to DWPF	n/a	n/a	n/a	n/a
Total Canisters Produced				8582	

Table 5 Notes:

(a) The indicated tanks are the sources of the major components of each sludge batch, not necessarily the sludge location just prior to transfer. Tanks 33 and 35, for example, are also used to stage sludge that is removed from other tanks.

(b) Dates are approximate and represent when Tank 40 gets to approximately 100,000 kg of insoluble solids left in the tank. Actual dates depend on canister production rates.

(c) LTAD stands for Low Temperature Aluminum Dissolution.

(d) Lower production rate assumed for dilute heel processing.

(e) Before SWPF tie-ins, DWPF WL% is 36%. After the tie-ins, production rate will be 276 canisters/yr @40% WL to support SWPF processing rates.

(f) Based on Reference [Hamm (B), 2014].

Note: Dates, volumes, and chemical or radiological composition information are planning approximations only.

5 Risks and Issues

Risks and issues that could impact this plan are documented herein. Most of these risks and issues are addressed in the "Risk and Opportunity Management Plan" (ROMP) [Winship, 2013] and detailed here with the cross referenced risk number of the plan. Note that plans devised for specific activities (i.e., plans for individual sludge batches, waste removal campaigns, etc.) will provide focused programmatic risk assessments and identify risk handling strategies.

5.1 *Equipment and Infrastructure Problems*

5.1.1 Discovery of additional leak sites in a sludge tank. Risk # 149 addresses this risk in the ROMP.

5.1.2 SMP or conventional slurry pumps failure. Risk # 011 addresses this risk in the ROMP.

5.1.3 Failure of Tank 51 or Tank 40 slurry pumps. Risk # 011 addresses this risk in the ROMP.

5.1.4 Excessive bearing water leakage into Tank 40. Risks # 011 and # 094 address this issue in the ROMP.

5.1.5 Inadequate availability or reduced performance of evaporators. Risks # 030, 116, 102, 344, and 094 address this risk in the ROMP.

5.2 *Sludge Characterization Uncertainty*

5.2.1 Differences between expected sludge mass estimates and masses actually realized. Risk # 119 addresses this issue in the ROMP.

5.2.2 The extent of application of oxalic acid chemical cleaning is not known. Large amounts of oxalic acid usage and subsequent oxalate receipt into sludge batches increases the amount of sludge washing necessary and deposits sodium oxalate in evaporator tanks. The method for eventual disposition of those sodium oxalate solids is uncertain. Risks # 33, # 117, and # 426 address this risk in the ROMP.

5.2.3 Uncharacteristic solids that could be encountered in waste removal tanks could result in washing constraints. Risks # 137 and # 048 address this risk in the ROMP.

5.3 *Sludge Behavior Uncertainty*

5.3.1 Unanticipated difficulty in removing the high level waste sludge from waste removal tanks. Risk # 048 addresses this risk in the ROMP.

5.3.2 Rheological properties of the sludge slurry could result in higher or lower slurry concentrations than predicted. Risk # 048 addresses this risk in the ROMP.

5.3.3 Lower than expected settling rates could result in additional wash water volume and Q-time constraints. Risk # 120 addresses this risk in the ROMP.

5.3.4 The aluminum dissolution process may be more or less successful than assumed for planning. Risk # 137 addresses this risk in the ROMP.

5.3.5 Assumed waste loading might be difficult to achieve for future batches. Risk # 396 addresses this risk in the ROMP.

5.4 *New Programs or Delays in Currently Planned Programs*

5.4.1 The process for Tank 48 remediation has not yet been determined. Tank 48 risk is to be determined.

5.4.2 Process for closure of tanks after heel sludge batch processing is not addressed in this Plan.

5.4.3 Inclusion of additional waste streams in the sludge batches could increase the washing volume requirements. Risk # 394 addresses this risk in the ROMP.

5.4.4 The process for addition of sludge modifier (simulated sludge, iron, and/or Uranium 238) to DWPF feed is not defined. As a result, impacts to tank space for sludge batch preparation and DWPF feed storage are not evaluated.

5.5 *Sludge Processing Uncertainty*

5.5.1 Actual assessed Tank 40 Q-times could constrain the transfer volume of sludge batches into Tank 40. This could cause transfers into Tank 40 to be delayed, or cause sludge batches to be somewhat smaller than assumed in this Plan.

5.5.2 Additional waste volume in Tank 51 and/or Tank 40 due to addition of sludge modifier could lower Tank Q-times and constrain sludge batch sizes.

5.5.3 Inclusion of sludge modifier in the sludge batches could result in unevaluated impacts to the sludge physical properties, which could adversely impact sludge processing.

5.5.4 Several sludge batches in this Plan do not comply in full with the current PCCS Limits [Hamm (A), 2014]. It is also possible that sludge batches may not meet WAC Limits. Risks # 083 and # 045 address this issue in the ROMP.

5.5.5 Washing of the heel-rich sludge batches (SB19-23) has not been considered in this Plan, partly due to the uncertainty of their composition. That uncertainty could mask potential processing difficulties. Risk # 33 addresses this risk in the ROMP.

6 Conclusions and Recommendations

Several inputs and assumptions in this Plan have changed from the previous Sludge Batch Plan. Funding, waste storage space and evaporation capacity have diminished. As a result, the planned rate of sludge processing has been lowered until SWPF startup.

Sludge processing is extended from September 2031 in Revision 18 of the System Plan to September 2038 (excluding the heel removal from the final several tanks) for the current Plan. The primary reason for this stems from concentrating more tank closure activities towards the end of the current System Plan. That results in a longer period of relatively slow canister production at the end of the Program. The high concentration of tank heel waste in the DWPF feed during that period also increases uncertainty as to the achievable waste loading. Another reason for the extended sludge processing period is the slower near-term salt processing rates through ARP/MCU. Processing more salt sooner would justify processing more sludge sooner as well.

This Plan includes the addition of modifiers to some sludge batches, mainly to maintain the Al/Fe ratio criteria of 0.6 or less, to support higher salt processing rates with higher canister production rates, and to maintain higher glass waste loading. This plan does not model any impact of sludge modifier on the physical aspects of sludge batch preparation in Tank 51. The additive form and addition method have not been devised. Therefore, sludge modifier use will require further research and development including ways to reduce or eliminate the need of sludge modifier.

In this Plan, LTAD will be performed for SB10 through 13.

The total canister production increases from 7824 in Revision 18 of the System Plan to 8582 for the current Plan. This is largely due to the addition of sludge modifier to sludge batches to maintain the production rate of 276 canisters/year after SWPF startup. The rate of 276 canisters/year supports the disposition of the strip effluent volume generated by the 9M gallon/year SWPF processing rate assumed in the System Plan. Table 6 provides an estimated breakdown of the impacts to the canister count difference between Revisions 18 and 19 of the Plan.

Table 6: Difference in Canisters Produced Rev. 19 vs. Rev. 18

Reasons for Changes in Canisters count	Change in Cans
R-18 Projected Canisters	7824
Increase due to estimated Tk 22 inventory	+289
Decrease due to estimated Tk 13 inventory (pre SB9 basis)	-189
Increase due to estimated Tk 39 inventory and future receipts	+132
Increase due to estimated Tank 51/SB8 inventory	+41
Increase due to addition of sludge modifier	+636
Decrease due to elimination of CST usage (No SCIX)	-117
Increase due to MST usage	+15
Decrease due to 18000 kg more dissolution with LTAD	-26
Decrease due to more washing (1.25 M from 1.5 M [Na])	-222
Additional canisters due to miscellaneous changes (i.e., heel processing projections, and compositional changes)	+199
R-19 Projected canisters	8582

The increase in canisters in this Plan compared with the previous version of the Sludge Batch Plan can be mainly attributed to a number of factors:

- A projected higher sludge mass in Tank 22.
- A projected need to add sludge modifier to SB15 through SB18, SB20, and SB22.
- The net impact of assumed changes in glass waste loading.
- Miscellaneous changes, including heel removal, chemistry projections, and potential compositional changes in the future sludge batches.

Factors which reduced the canister count include:

- The estimated impact of washing batches to 1.25 M instead of 1.5 M sodium endpoint.
- SCIX is not currently planned, so no CST is added to the waste.
- The estimated sludge mass from Tank 13 is reduced, based on sludge removal results.
- Approximately 18000 kg of more HM sludge is dissolved via LTAD compared to Revision18 of the Plan.

Many factors can affect future liquid waste operations, so actual canisters produced may be more or less than the amount projected here.

Preparation of SB9 through SB18 as devised for this Plan appears to be feasible. SB19 through SB23 were not modeled, as their small size greatly reduces the usual processing constraints (settling rate, flammability control, chemical adjustment), and their uncertain composition limits the ability to analyze them in much detail.

This Plan's success is dependent upon on-time start-up and operation of SWPF implementation as planned. Some PCCS criteria are not met by projections for some sludge batches, as described in Section 3.8. WAC criteria do meet the current limits based on the assumptions discussed earlier. If WAC or PCCS limits are not met in the future, there are options available such as, utilizing frits other than Frit 803, less constrained PCCS modeling algorithms, relaxation of certain WAC constraints, and future modifications to DWPF chemistry and processing strategy.

Risk mitigation strategies should continue to be developed. Equipment and infrastructure related problems are likely to dominate risks that are within the control of the program. These will be the focus of planned risk mitigation efforts.

7 References

D. P. Chew and B. A. Hamm, *Liquid Waste System Plan*, SRR-LWP-2009-00001, Revision 19, (DRAFT), 2014.

J. M. Gillam, D. W. McIlmoyle, *Sludge Batch Plan 2013 in Support of System Plan R-18*, SRR-LWP-2013-00019, Rev. 0, April 2013.

J. W. Ray, *Waste Acceptance Criteria for Sludge, ARP, and MCU Process Transfers to 512-S and DWPF*, X-SD-G-00008, Rev. 13, December 2013.

H. H. Elder and B. A. Hamm, *Savannah River Site, DWPF Sludge Feed Mass – Predicted vs. Measured*, CBU-PIT-2006-00046, Rev. 0, March 2006.

J. M. Gillam, Pitdata on \\Pitstop\pitdata\PitWork\Folks\Gillam-Jeff\Future SBs\SB Plan 1013\Rev19 SB Washing Sequence.xlsm, January 2014.

B. A. Hamm (A), System Planning Toolkit Ver. 13 Spreadsheets, \\Pitstop\pitdata \Pitwork\ Folks\Hamm-Barbara\2013 System Plan, Rev 19\Case LWSP_R19_A001, SWPF Sep 2018\2013 System Planning Toolkit, Ver 13, Case LWSP_R19_A001, 2014.

B. A. Hamm (B), System Planning Toolkit Ver. 13 Volume Balance, \\Pitstop\pitdata\ Pitwork\ Folks\Hamm-Barbara\2013 System Plan, Rev 19\Case LWSP_R19_C001.

B. A. Hamm and H. H. Elder, Savannah River Site, *Sludge Characterization Model Using Dial-Up Factors*, CBU-PIT-2006-00058, Rev. 0, March 2006.

T. B. Edwards, Savannah River Site, *Estimating the Sludge Mass Remaining in SRS Waste Tanks after the Processing of Sludge Batch 4*, SRNL-SCS-2006-00021, Rev. 0, July, 2006.

P. J. Hill, Savannah River Site, *Selection of Sludge Masses for Life Cycle Liquid Waste (LLWD) System Plan Development*, , LWO-PIT-2006-00005, Rev. 0, July 2006.

J. R. Hester, *High Level Waste Characterization System*, WSRC-TR-96-0264, Rev. 0, December 1996.

J. M. Pareizs, *Tank 51 (HTF-51-13-171) Weight Percent Solids and Density*, SRNL-L3100-2013-00171, Rev. 0, September 2013.

A. R. Shafer, *Tank 22: Inhalation Dose Potential and Hydrogen Generation Rate Determination Accounting For DWPF Recycle Solids and Rebaseline for WCS*, X-ESR-H-00494, Rev. 0, April 2013.

P. N. Bhatt, *Summary of Tank 13 Campaigns in Support of SB9*, SRR-WSE-2013-00171, September 2013.

C. L. Crawford and D. P. DiPrete, *Determination of Reportable Radionuclides for DWPF Sludge Batch 7B (Macrobatch 9)*, SRNL-STI-2012-00294, Rev. 1, August 2013.

J. M. Gillam, *Sludge Settling Rate Observations and Projections at the Savannah River Site*, SRR-LWP-2012-00070, February 2013.

T. Le, *CSTF Evaporator Feed Qualification Program*, WSRC-TR-2003-00055, Rev. 7, March 2010.

A. G. Hansen (A), *CSTF Flammability Control Program*, WSRC-TR-2003-00087, Rev. 21, August 2013.

M. J. Ades, *Hydrogen Retention in Slurried Sludge*, WSRC-TR-2004-00077, Rev. 2, January 2010.

E. D. Lee, *Insoluble Solids Settling in Tank 51 During Baseline Runs*, WSRC-RP-96-87, Rev. 0, May 1996.

WCS 1.5, Waste Characterization System Database of August 27, 2013, Pitdata on 'pitstop'\PitWork\Folks\Gillam-Jeff\Future SBs\SB Plan 1013\Copy of WCS 1.5_for R19 082713.

J. M. Gillam, *Projected Sludge Settling Results for Sludge Batch 5*, X-ESR-H-00130, March 2008.

L. L. Kilpatrick, *Solubility of Sodium Oxalate and Sodium Tetraphenylborate* in DWPF Supernate, DPST-84-341, February 1984.

A. G. Hansen (B), *CSTF Corrosion Control Program*, WSRC-TR-2002-00327, Rev. 7, April 2013.

Q. L. Nguyen, "*Tank 41 Salt Dissolution Flowsheet*", CBU-SPT-2004-00265, Rev. 0, November 29, 2004.

G. C. Winship, Risk and Opportunity Management Plan, Y-RAR-G-00022, Rev. 9, June 2013.

M.S. Hay, *Analysis of the Sludge Batch 8 (Tank 51) April 2013 Confirmation Sample*, SRNL-L3100-2013-00063, Rev. 1, May 2013.

C. J. Bannochie, Tank 40 Final SB7b Chemical Characterization Results, SRNL-STI-2012-00097, Rev. 1, Nov. 2012.

F. C. Raszewski and T. B. Edwards, Reduction of Constraints for Coupled Operations, SRNL-STI-2009-00465, Revision 0, December 2009.

Distribution:

Blackmon, R. W., 766-H
Blair, C. E., 704-56H
Blocker, B. D., 766-H
Borders, M. N., 704-S
Brass, E. A., 241-121H
Bricker, J. M., 704-30S
Bumgardner, D. C., 704-26F
Burkhart, R. T., 766-H
Cantrell, J. R., 705-1C
Chapman, N. F., 766-H
Chew, D. P., 766-H
Contardi, J. S., 766-H
Davis, N. R., 704-56H
Edwards, T. B., 999-W
Edwards, R. E., 766-H
Elder, H. H., 704-27S
Fellinger, T. L., 766-H
Freed, E. J., 704-S
Gilbreath, K. D., 766-H
Gillam, J. M, 766-H
Green, B. L. 704-56H
Hamm, B. A., 766-H
Harp, K. D., 766-H
Hauer, K. A., 766-H
Herbert, J. E., 241-108F
Hill, P. J., 766-H
Holtzsheiter, E. W., 766-H
Hubbard, M., 241-162H
Keefer, M. K., 704-56H
Le, T. A., 766-H
Ledbetter, J. S., 704-56H
Mahoney, M. J., 705-1C
Marra, S. L., 773-A
MacVean, S. A. 766-H
McGuire, D.H. 999-W
Occhipinti, J. E., 704-56H
Peeler, D. K., 999-W
Ray, J. W., 704-27S
Reuter, K. J., 766-H
Rios-Armstrong, M. A., 241-197H
Rowell, L. E., 766-H
Shah, H. B.,766-H
Sherburne, C. B., 707-7E
Spires, R. H., 241-156H
Thomas, S. A., 705-1C
Tihey, J.R., 241-162H
Tisler, A. J., 707-13E
Vitali, J. R., 241-156H
Wilkerson, S. W., 704-S
Winkler, C. J. 766-H
Wood, D. C., 7004-56H