Savannah River Remediation
AECOM BECHTEL CH2M | BWXT

Citizens Advisory Board Meeting
Savannah, GA

Liquid Waste Operations Overview

Larry Ling

Chief of Staff

Savannah River Remediation

The Beginning

We do the right thing.

THE WHITE HOUSE
WASHINGTON

July 25, 1950

Dear Mr. Greenewalt:

The Atomic Energy Commission has informed me that it has requested the DuPont Company to undertake the design, construction and operation of certain new facilities for the atomic energy program.

The Commission advises me that the Company has within its organization technical, scientific, engineering, construction and operating staffs capable of handling a task of this magnitude. The great resources of your Company in these fields, together with the experience which it has acquired through the successful handling of the design, construction and operation of the Hanford Project during the War make it uniquely qualified to undertake this most essential task.

I want you to know that I consider this project as one of highest urgency and vitally important to our national security and defense.

Very sincerely yours,

Harry Truman

Mr. Crawford H. Greenewalt
President, DuPont Company
10 Market Street
Wilmington, Delaware

RECEIVED
JUL 26 1950
C. H. GREENEWALT

- Request from President Truman to DuPont 1950
- Savannah River Plant Site acquired 1951
- DuPont begins operations 1952
- Westinghouse Savannah River Company assumed operations 1989
- Savannah River Remediation contract began July 2009

Savannah River Site

We do the right thing.

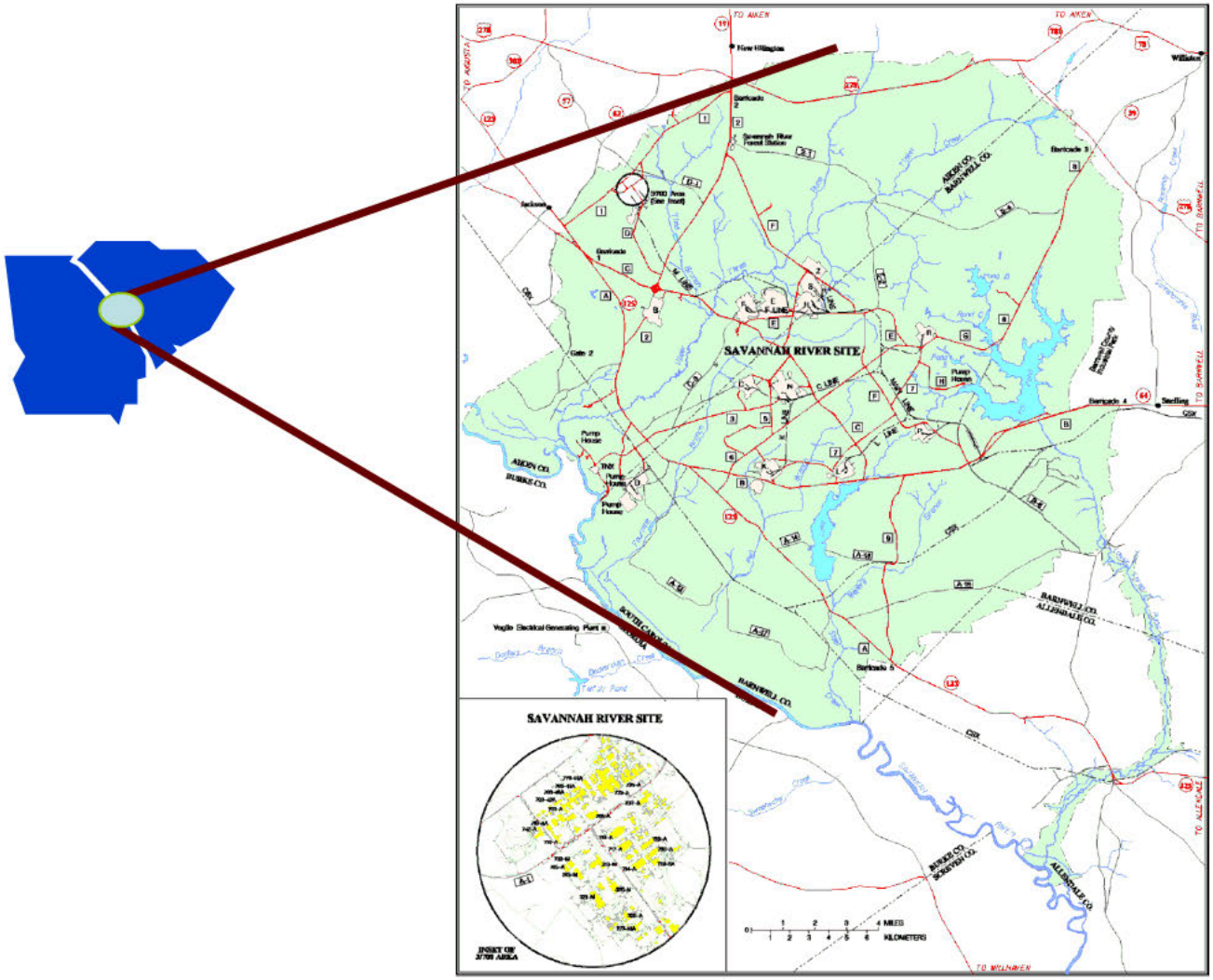

Facility Start-up

- **Site Construction begins Feb 1951**
- **D-Area — Heavy Water, operations begin Aug 1952**
- **M-Area — Fuel & Target Fabrication, slugs produced Dec 1952**
- **100 Areas — R-Reactor goes critical Dec 1953**
- **200 Areas — Separations**
  - 221-F operations begin Nov 1954
  - 221-H operations begin Jul 1955
  - Tank Farms —
    - F-Area Tanks 1-8 built 1951-1953, received first waste 1954
    - H-Area Tanks 9-12 built 1951-1953, received first waste 1955

L-Reactor

Savannah River Remediation
AECOM | BECHTEL | CH2M | BWXT

F Canyon & Tank Farm

We do the right thing.

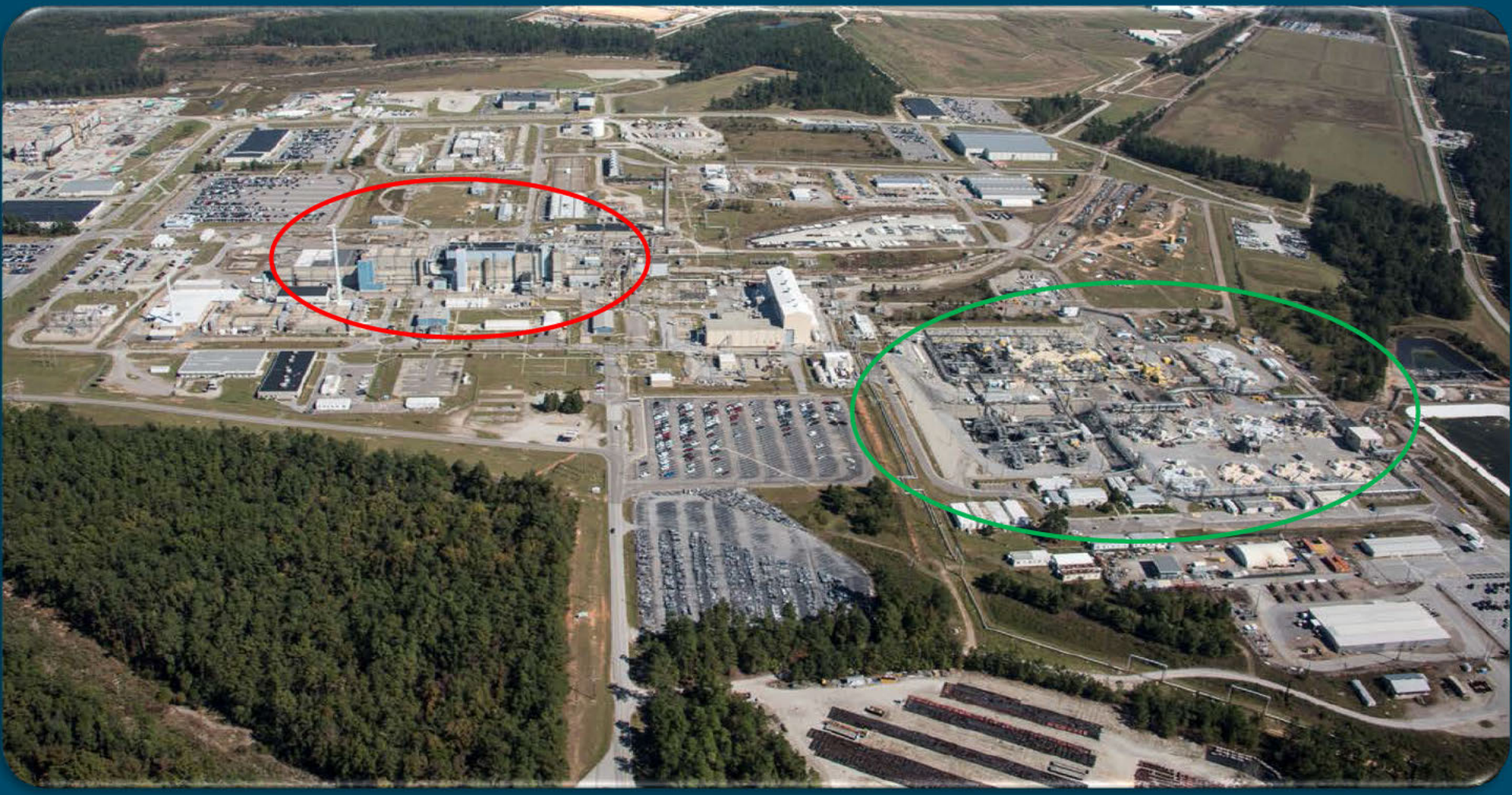

Savannah River Remediation
AECOM | BECHTEL | CH2M | BWXT

H-Canyon and Tank Farm

We do the right thing.

Type III Tank Under Construction

Tanks are built at grade and then backfilled with dirt to provide shielding.

Liquid Waste Operations Mission

- **Safely receive and store liquid radioactive waste**
- **Process that waste into stable, inert solids**
- **Operationally close the tanks**

Waste Tanks

We do the right thing.

Type I Waste Tank
750,000 gal

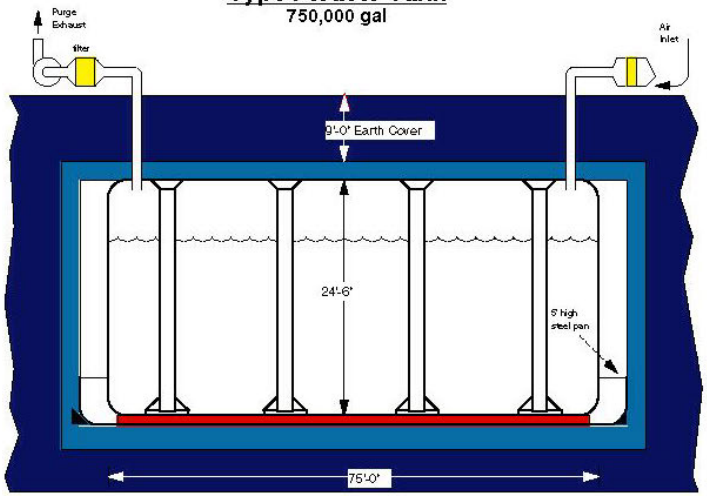

Type II Waste Tank
1,030,000 gal

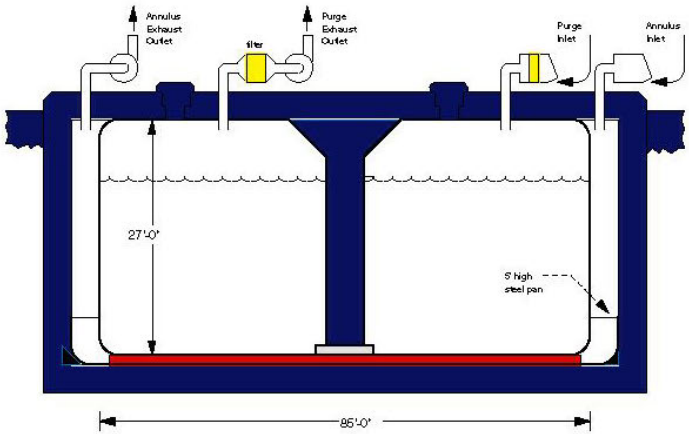

Type III Waste Tank
1,300,000 gal

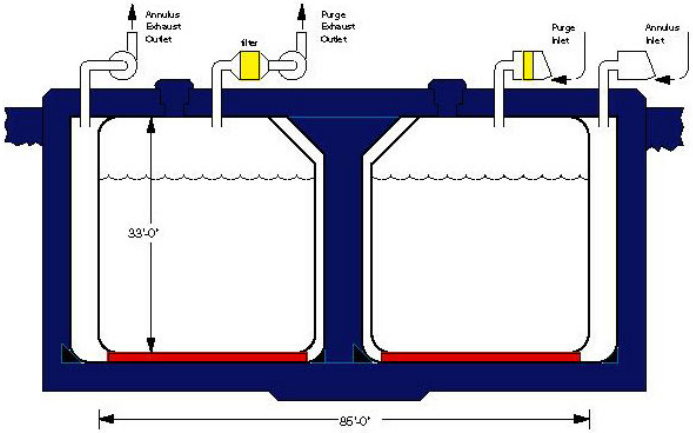

Type IV Waste Tank
1,300,000 gal

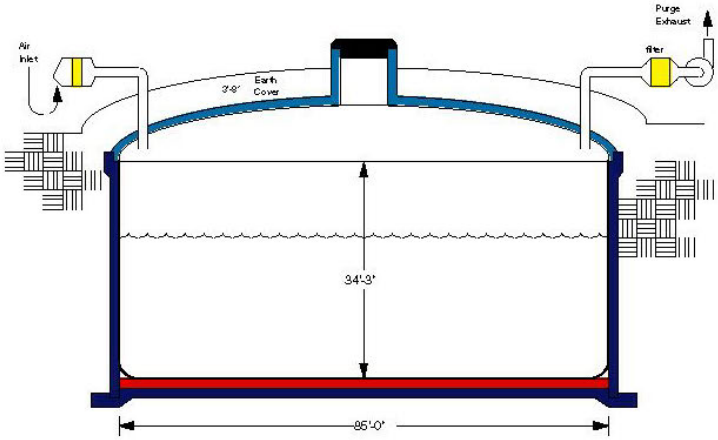

High-Level Waste Facilities

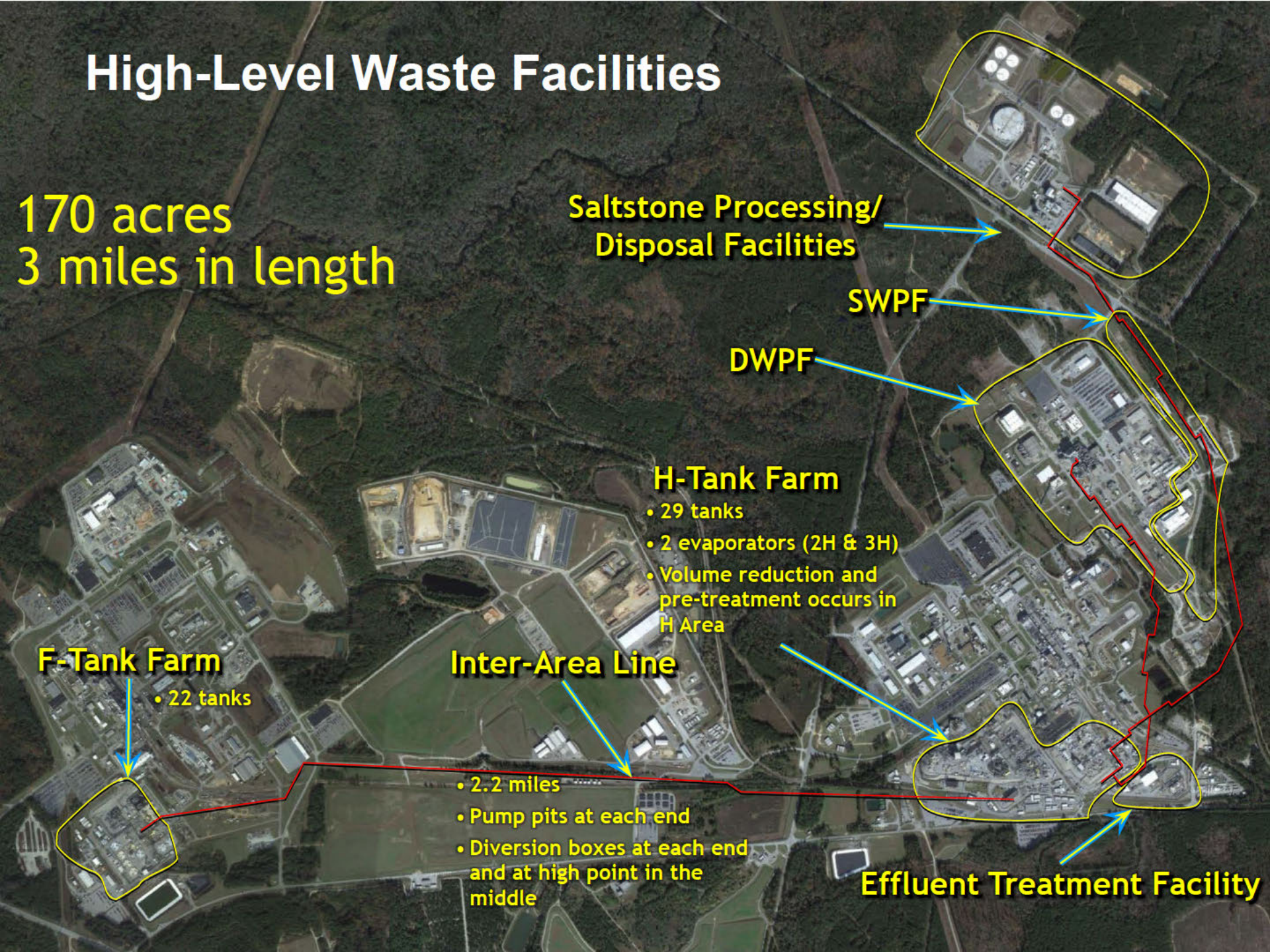

SRS Composite Inventory

We do the right thing.

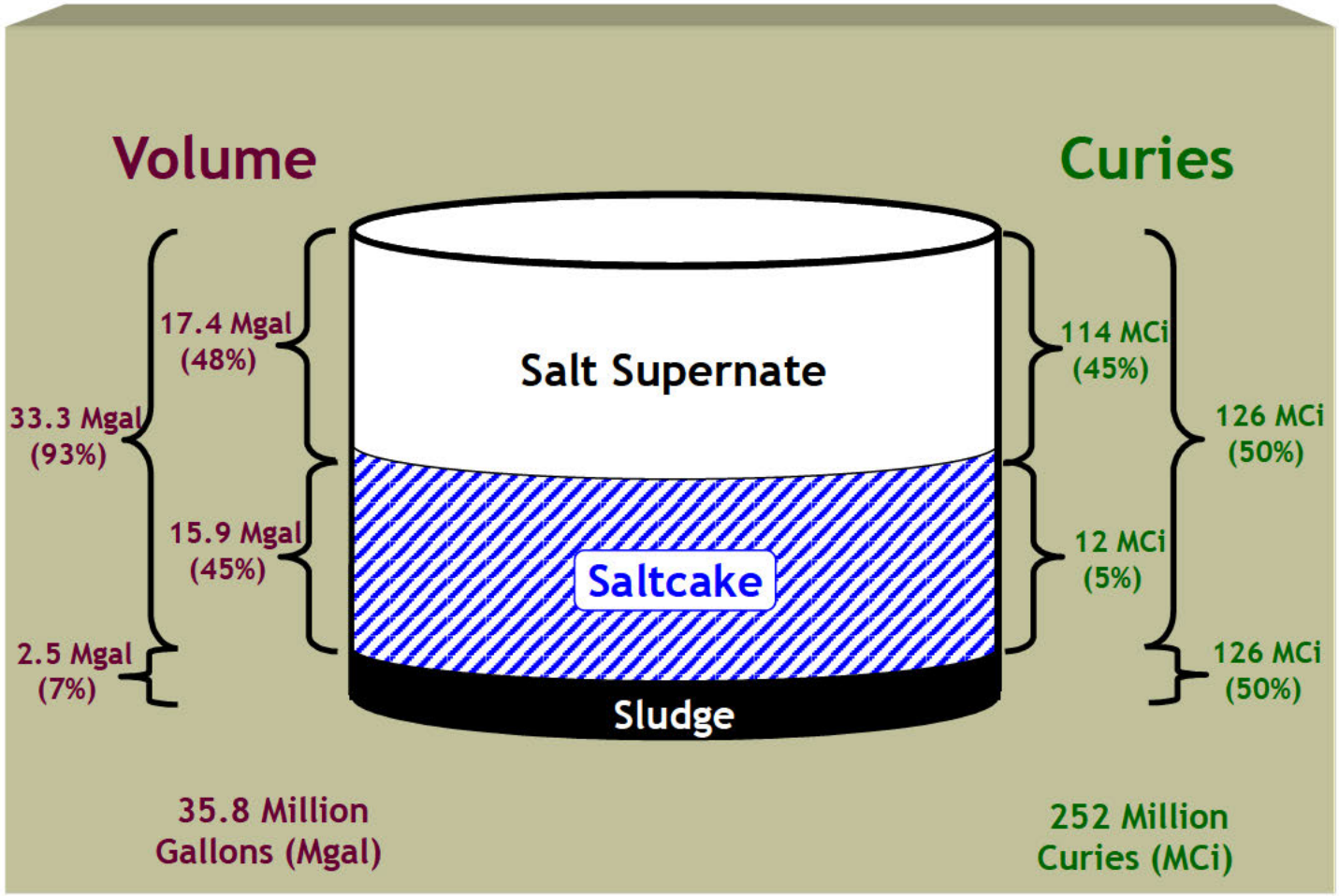

Inventory values as of 2016-03-31

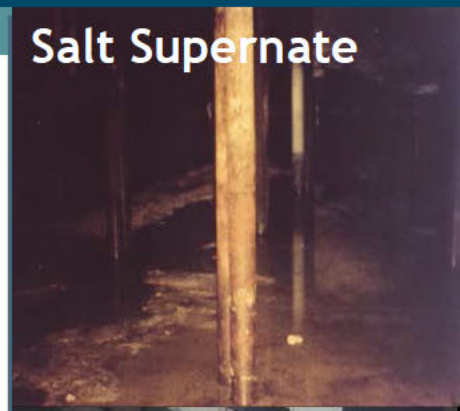

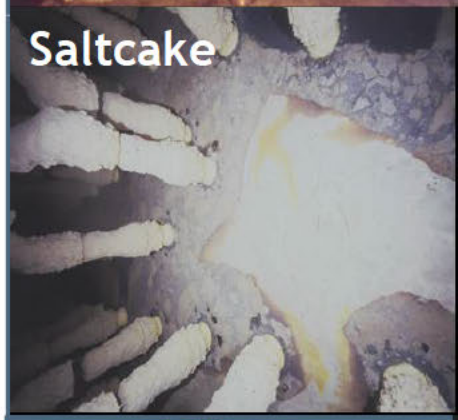

SRR Liquid Waste Program Operational Highlights

We do the right thing.

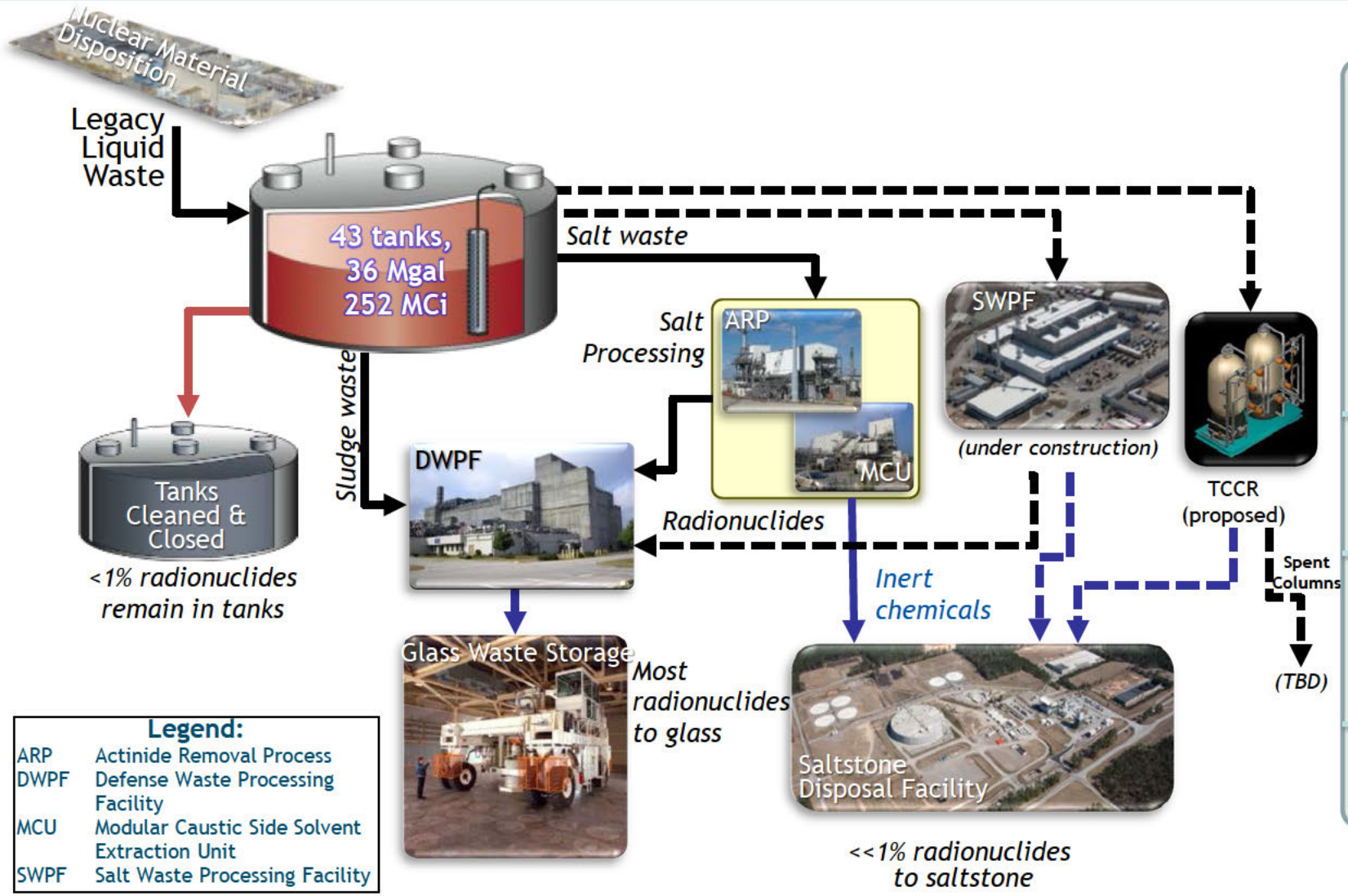

Legend:

ARP	Actinide Removal Process
DWPF	Defense Waste Processing Facility
MCU	Modular Caustic Side Solvent Extraction Unit
SWPF	Salt Waste Processing Facility

51 Tanks
7 grouted & closed
1 being grouted
4 bulk waste removed
64% empty (old style)
23% empty (new style)

Poured 4,039 cans of projected 8,170

19 Mgal grout dispositioned containing 463 kCi

8.8 Mgal salt waste treated

Tank 5 - Chemical Cleaning Results

We do the right thing.

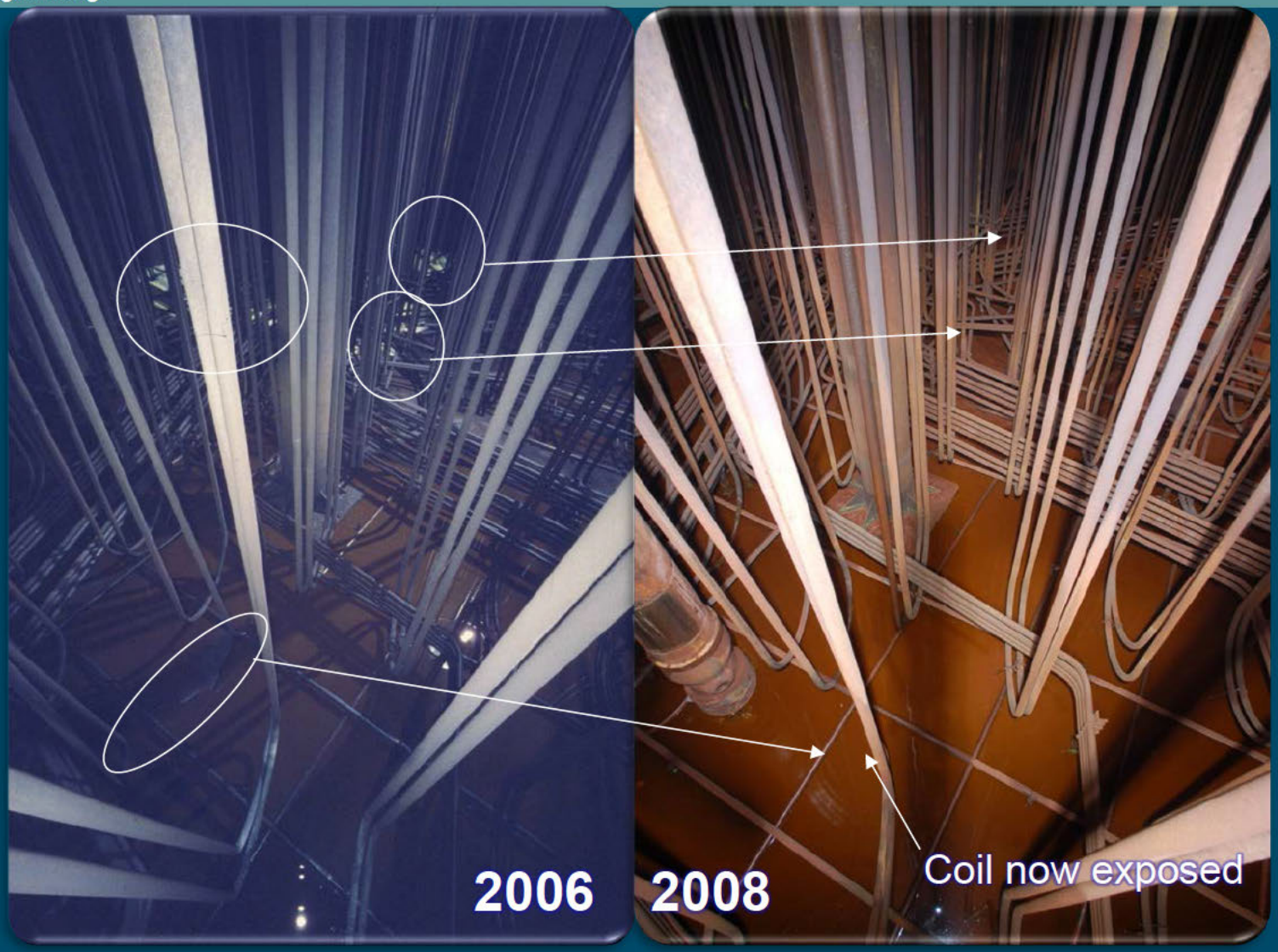

Tank 5 - Chemical Cleaning Results

We do the right thing.

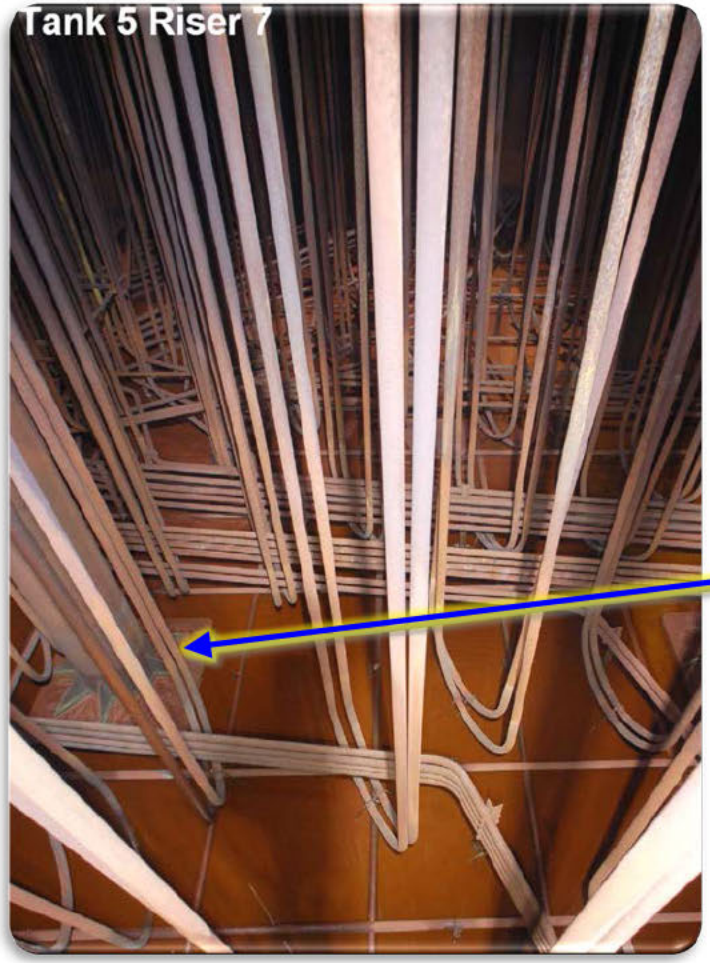

Annulus Cleaning Crawler

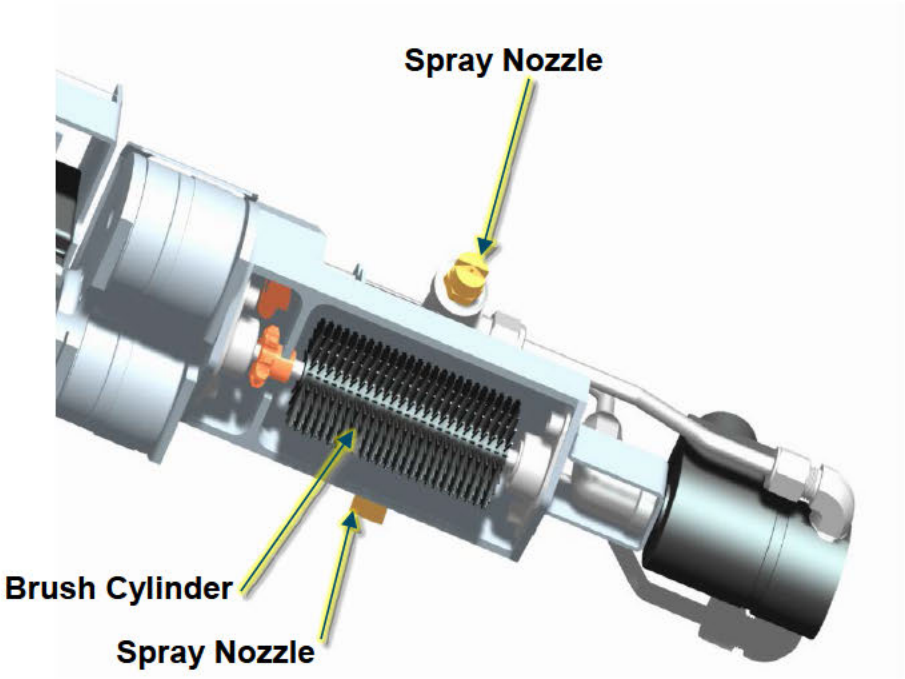

- Wall Crawler used to clean and inspect Tks 5 & 6 annulus wall (Tank 5 ~ 10 gallons of salt - Tank 6 ~ 90 gallons of salt)

Tank 20

We can get some tanks nearly clean

12" x 12" x ⅜" construction plates

July 16, 1996

Grouting

We do the right thing.

Saltstone Facility

We do the right thing.

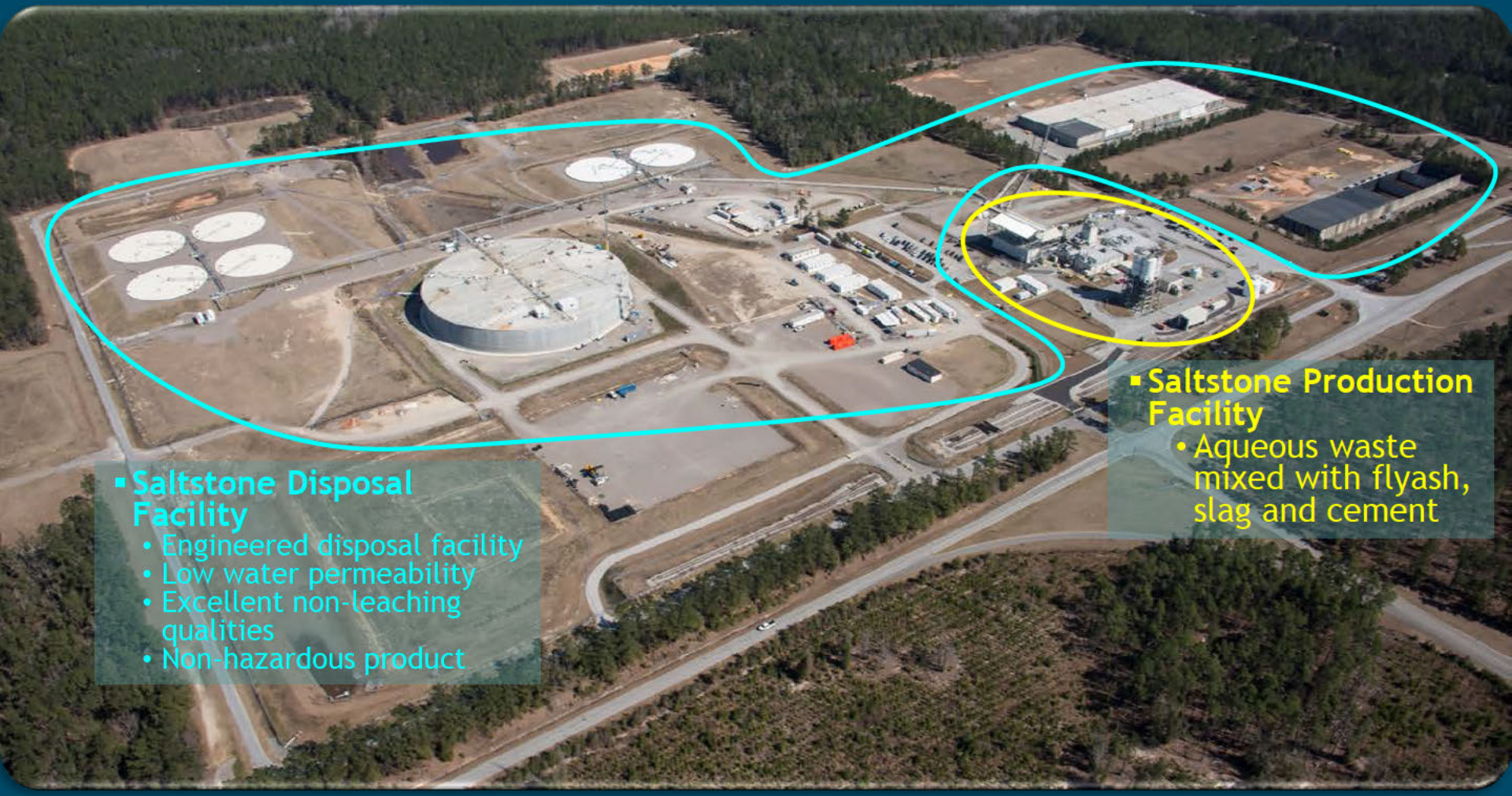

Savannah River Remediation
AECOM | BECHTEL | CH2M | BWXT

SDU-6 Construction

Saltstone Disposal Units (SDU)

We do the right thing.

Saltstone Flow Diagram

We do the right thing.

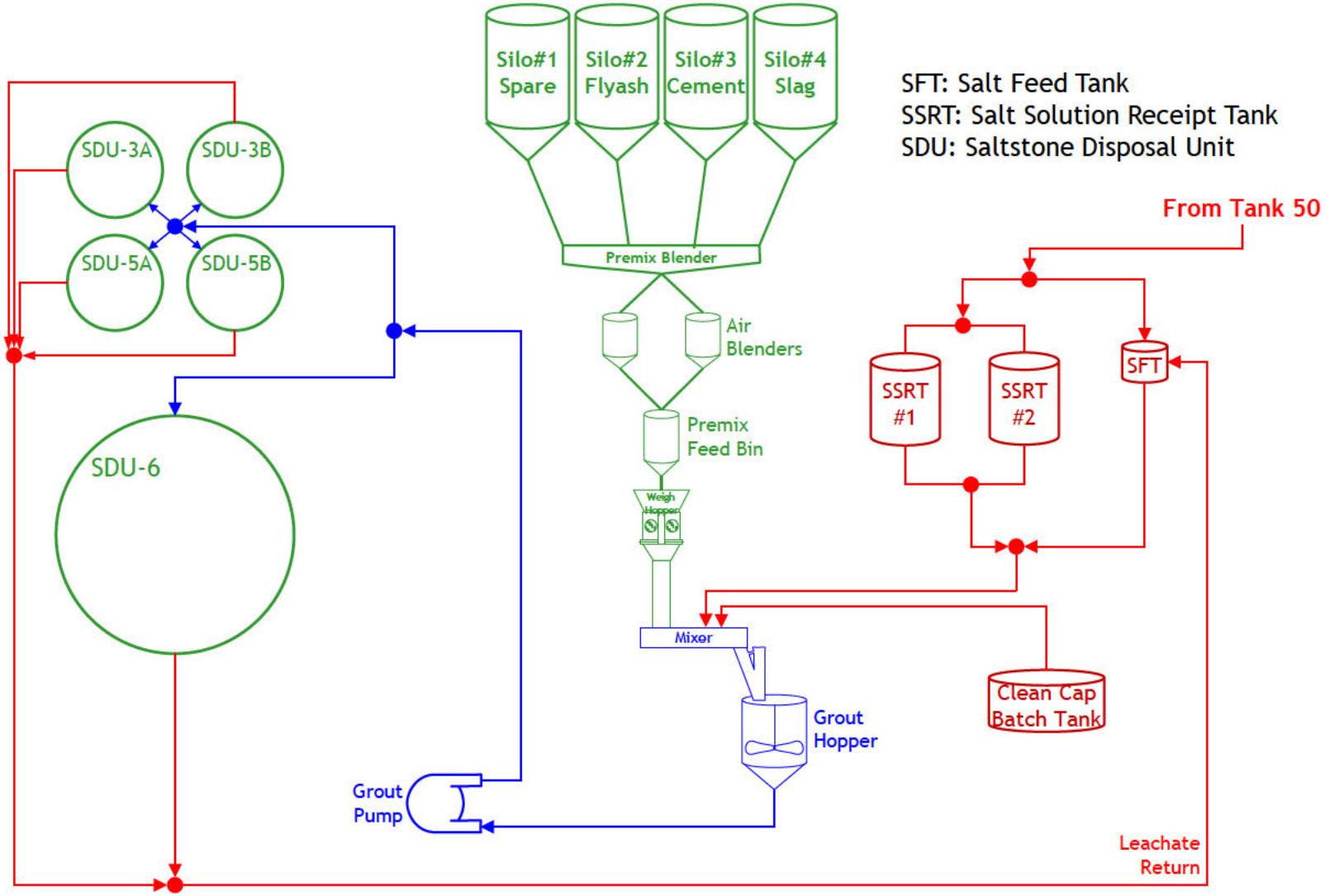

DWPF

We do the right thing.

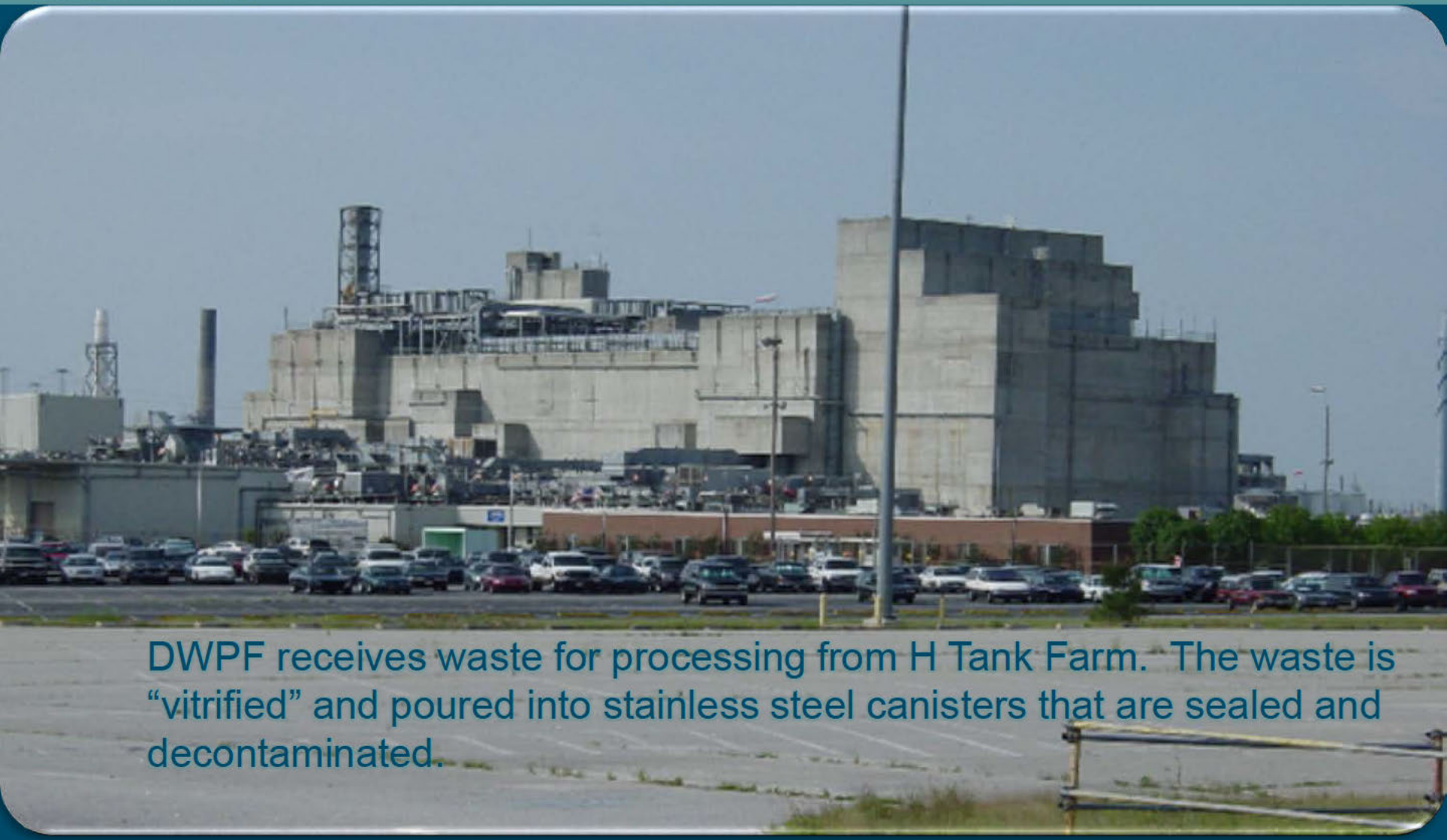

DWPF receives waste for processing from H Tank Farm. The waste is "vitrified" and poured into stainless steel canisters that are sealed and decontaminated.

Defense Waste Processing Facility Vitrification Process

We do the right thing.

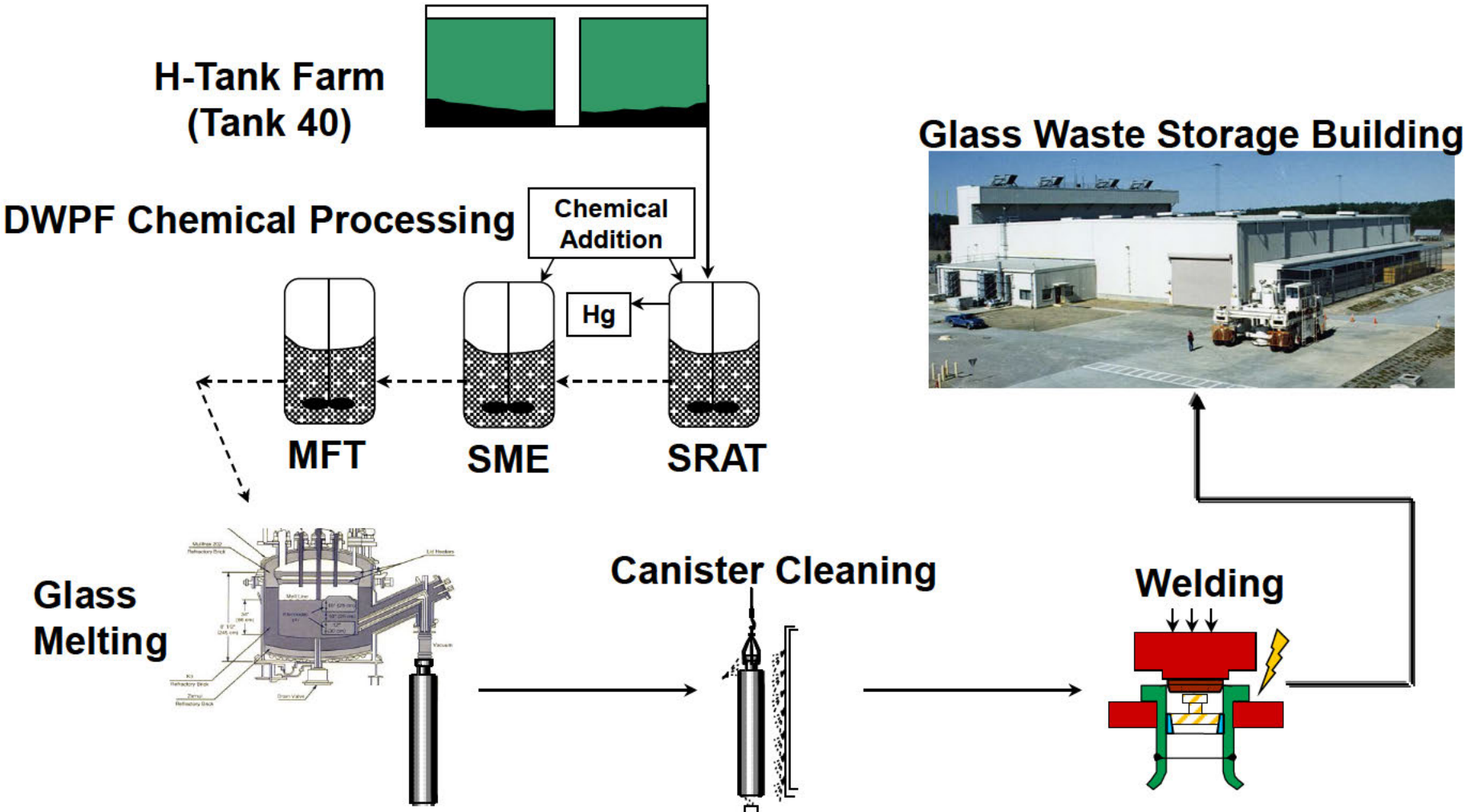

Largest Vitrification Plant in the World

Melter

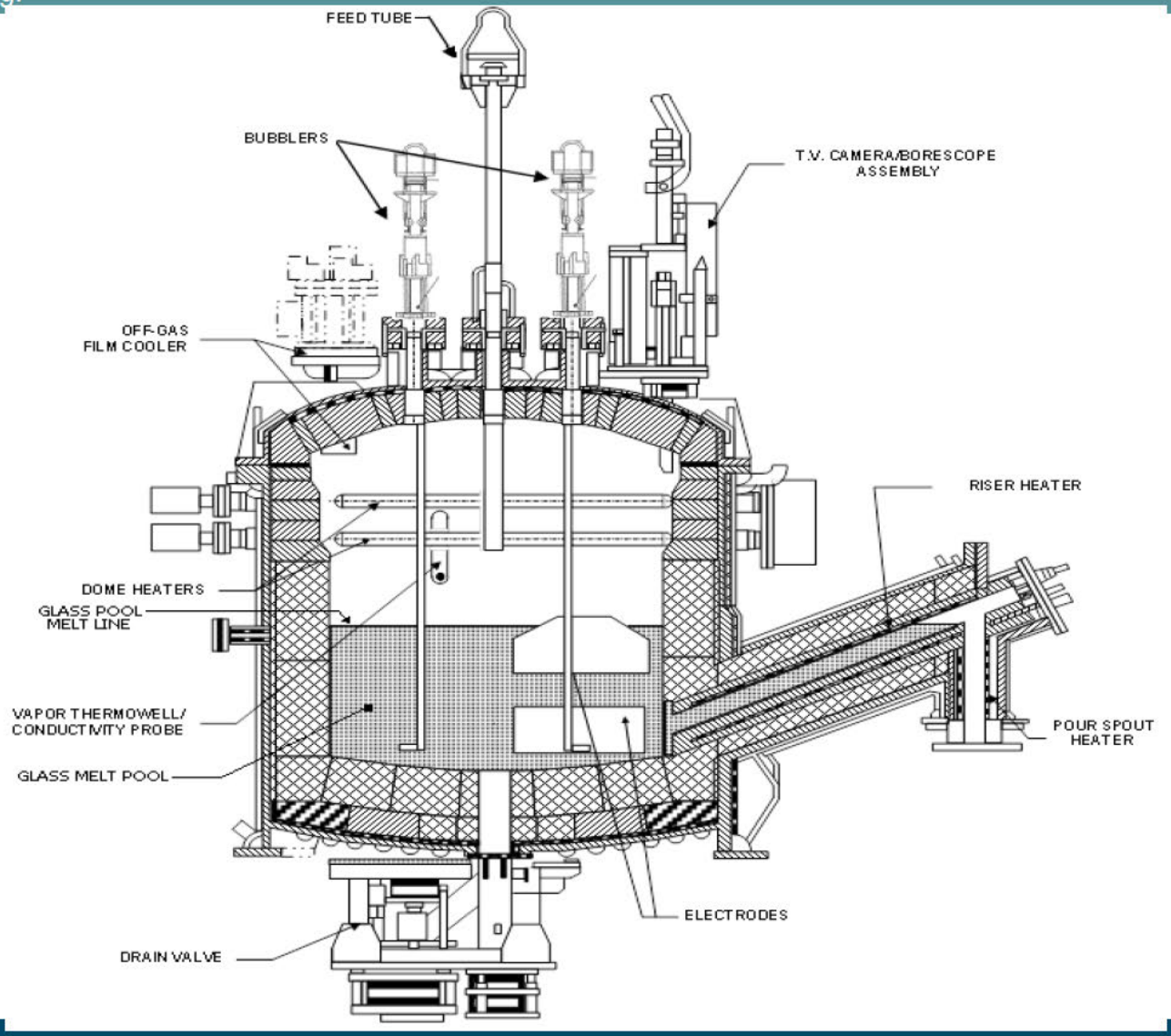
FEED TUBE
BUBBLERS
T.V. CAMERA/BORESCOPE ASSEMBLY
OFF-GAS FILM COOLER
RISER HEATER
DOME HEATERS
GLASS POOL MELT LINE
VAPOR THERMOWELL/ CONDUCTIVITY PROBE
GLASS MELT POOL
POUR SPOUT HEATER
ELECTRODES
DRAIN VALVE

DWPF Canister

We do the right thing.

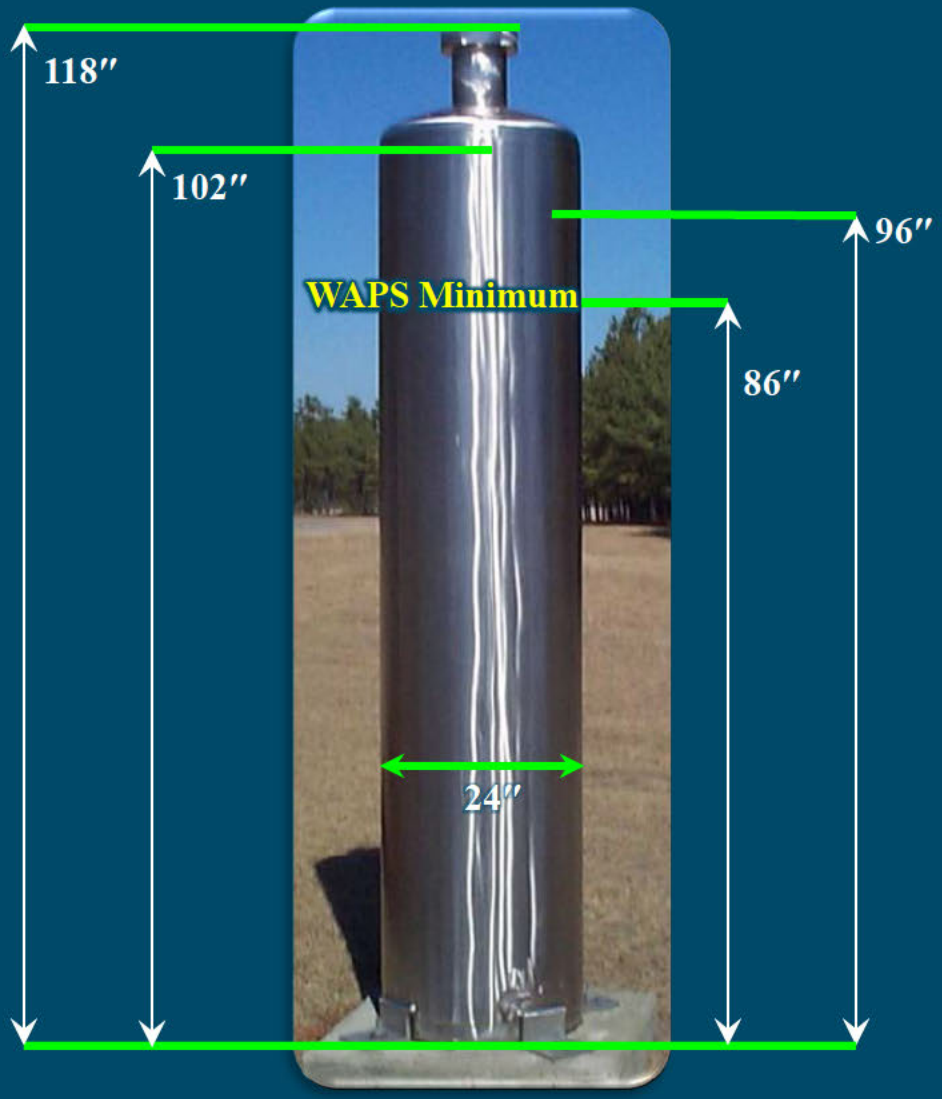

Filled Canister

Materials: 304L Stainless Steel
Empty Weight: 1,150 lbs.
Glass Weight: 4,000 lbs.

Shielded Canister Transporter

- **Canisters**
  - **Filled**
  - **Cleaned**
  - **Sealed . . .**

Ready for Transport

Glass Waste Storage Buildings

Glass Waste Storage Building #1 provides earthquake-resistant, safe interim storage for radioactive waste canisters

Glass Waste Storage Building #2 provides interim storage for an additional 2500 canisters

Interim Canister Storage - Double Stack (ICS-DS) Concept for GWSB1

We do the right thing.

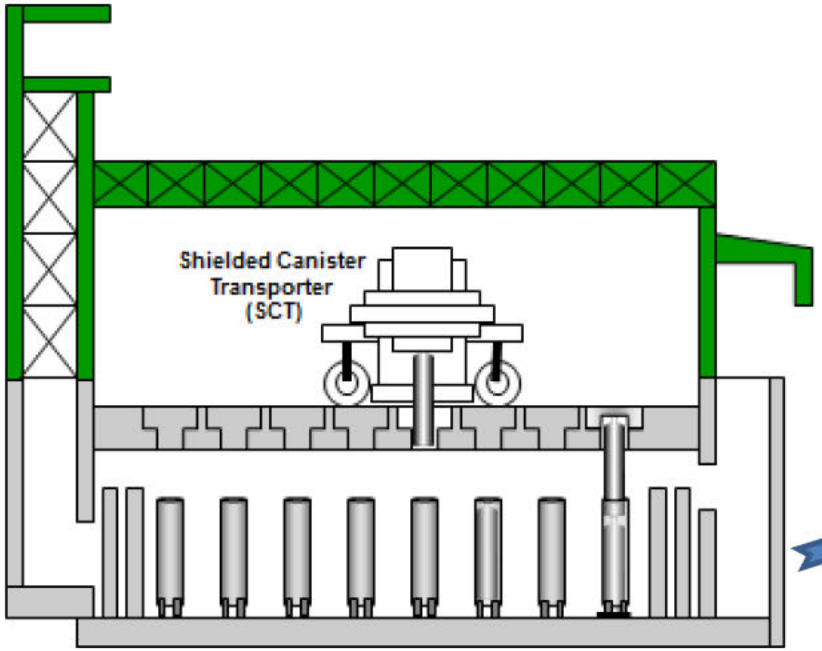

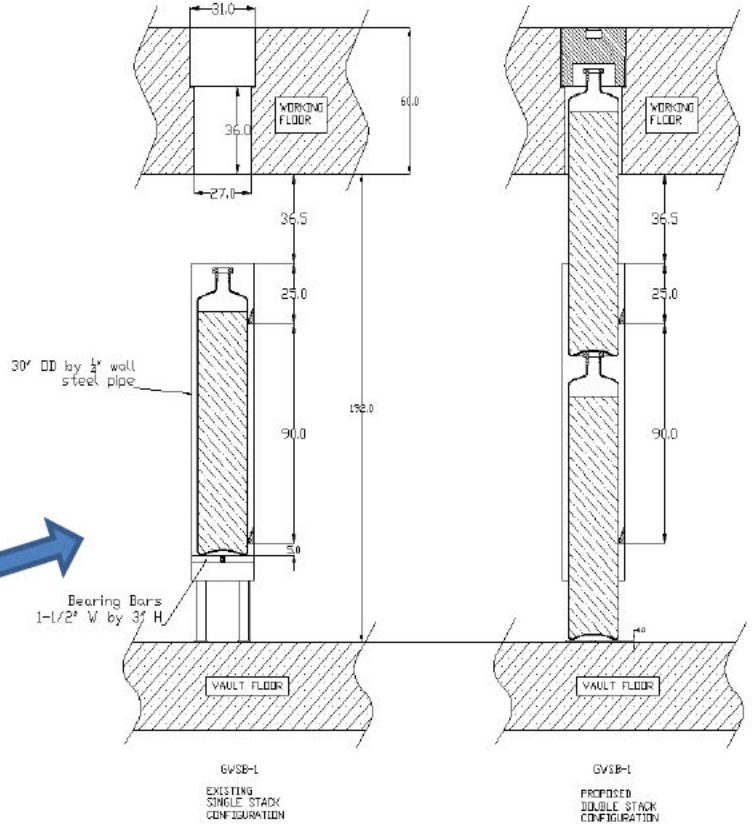

- Two canisters per location (vs. one can per location)
- Lower canister on support plate on vault floor (vs. cross bar support 3' off floor)
- Upper canister placed directly on top of lower canister
- Upper canister extends into operating deck floor, but remains below grade
- Shield plug redesigned for equivalent radiological protection

Glass Waste Storage Building 1 Vault

- **Inside vault looking across rows of canister supports**
- **Inside canister storage location**
  - Minimum Opening in floor is 27 inch ID
  - Cross Bar Assembly is 1 ½ inch x 3 inch galvanized carbon steel bars
  - Cross Bar Assembly~ 18 ft down with 30 inch OD
  - 2 sets of guides (3 tabs each) to guide canisters
  - Bottom guides sit 5 inches above cross bar assembly

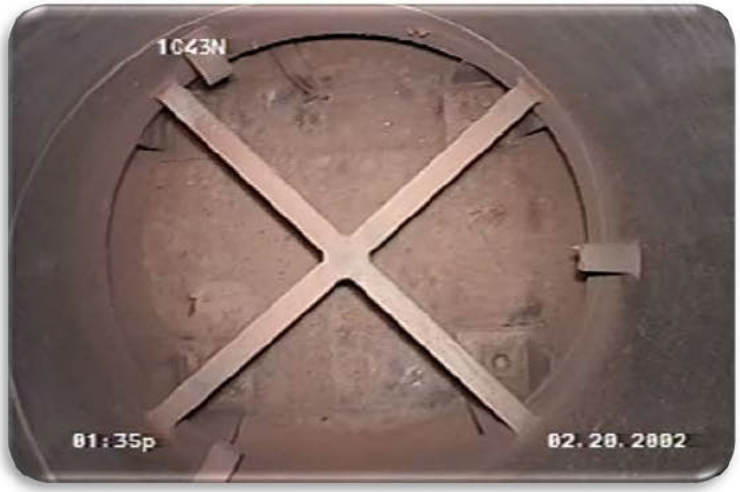

Proposed Modifications

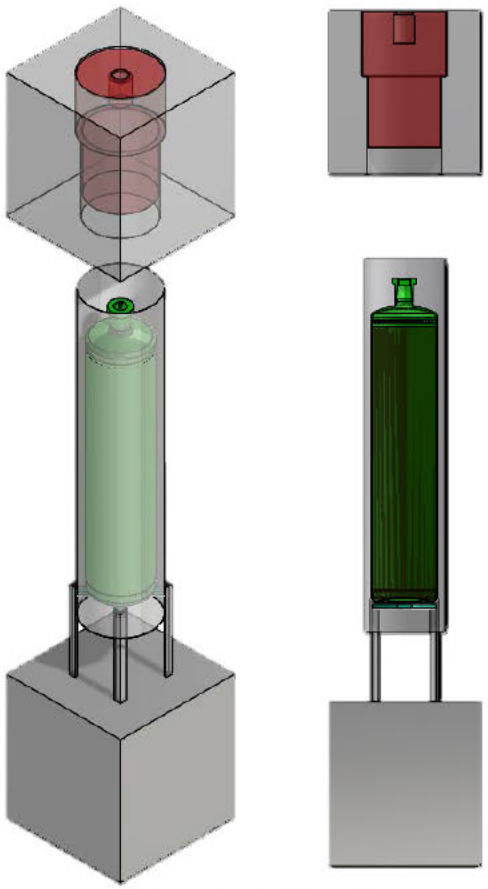

Single Stack
(Current)

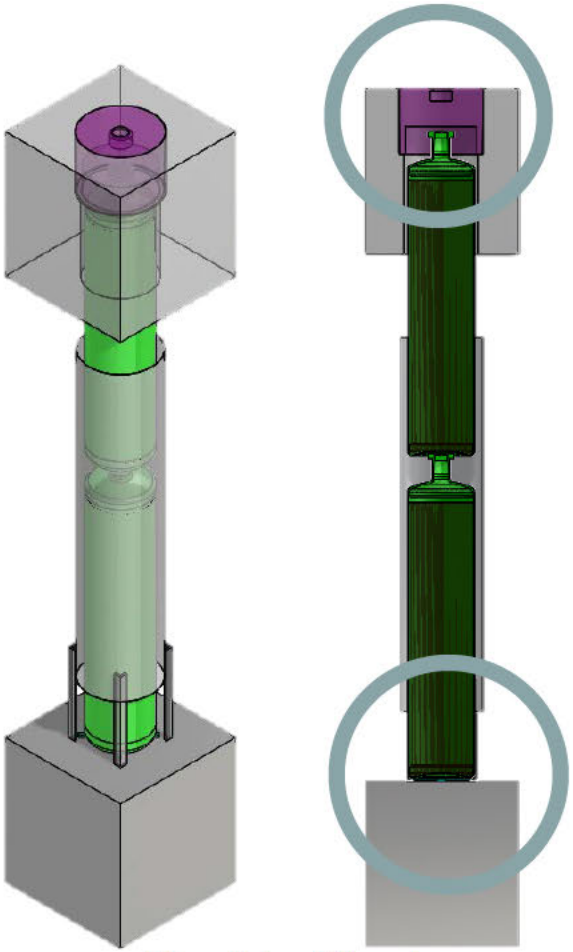

Double Stack
(Modified)

Summary

We do the right thing.

- **On May 12, DOE/SRR celebrated 20 years of Defense Waste Processing Facility operations and Tank 12 closure**
- **Dr. Monica Regalbuto, Assistant Secretary for Environmental Management, keynote speaker**

FY16 Production Status

84 of 150 Canisters
DWPF

439K of 1,500K Gallons
Saltstone

483K of 2,300K gal Space Gain
Evaporators

599K of 1,500K Gal.
ARP/MCU

Back-up Slides

Tank Waste Sources—Pu-239 Recovery F-Canyon – PUREX Process

- **Pu-239 recovery**
  - Depleted uranium targets dissolved in nitric acid and processed through solvent extraction
  - Acidic waste stream evaporated and neutralized with sodium hydroxide
  - High amounts of radioactivity (fission products)

Tank Waste Sources—U-235 Recovery H-Canyon – H Modified Process

- **U-235 / Np-237 recovery**
  - Uranium fuel dissolved in nitric acid and processed through solvent extraction
  - Acidic waste stream evaporated and neutralized with sodium hydroxide
  - High amounts of radioactivity (fission products)

- **Pu-238 recovery**
  - Neptunium targets dissolved in nitric acid and processed through solvent extraction
  - Acidic waste stream evaporated and neutralized with sodium hydroxide
  - High amounts of radioactivity (fission products)

SRS Tank Farm Operations

We do the right thing.

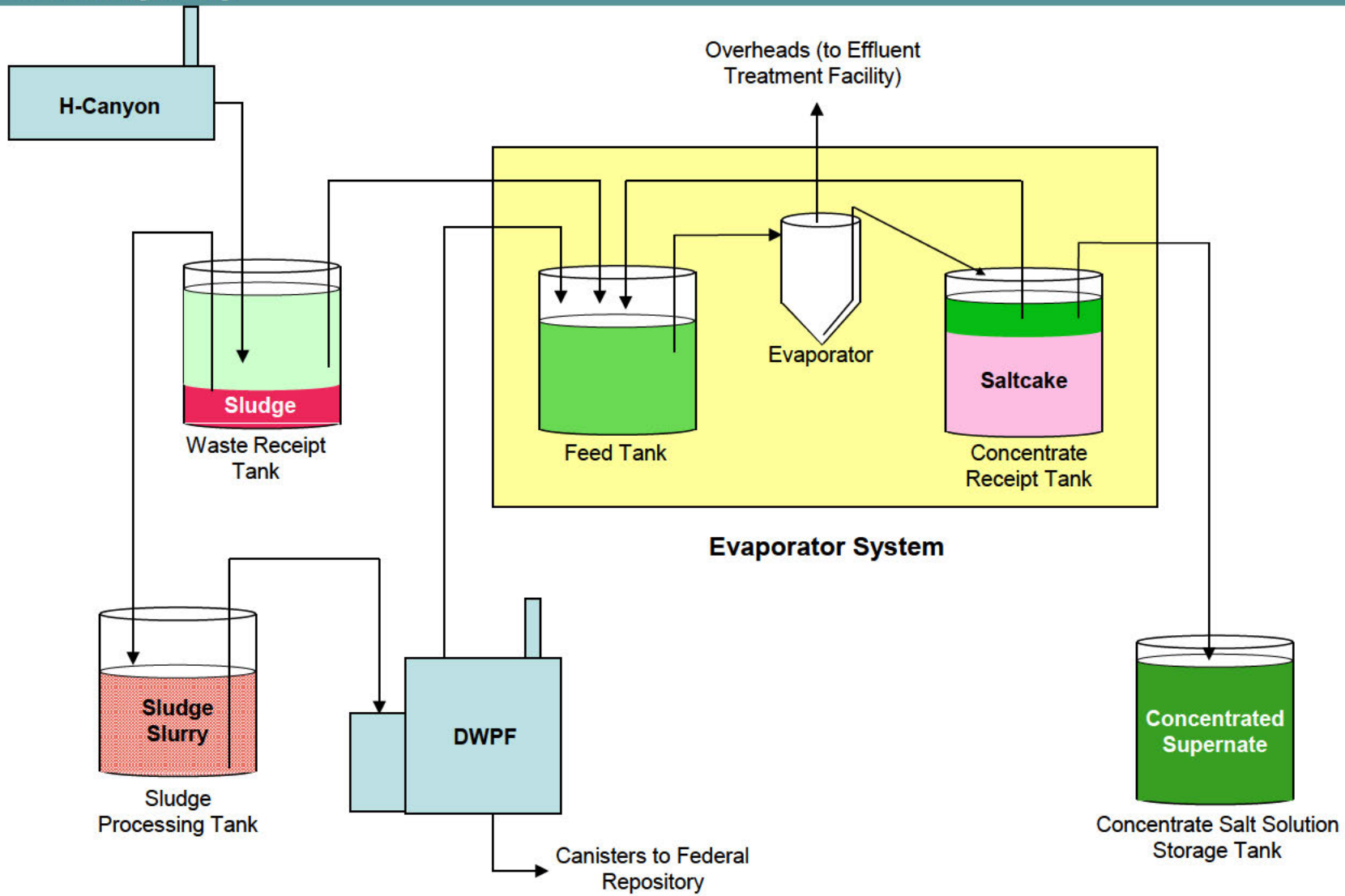

SRS Tank Farm Operations

We do the right thing.

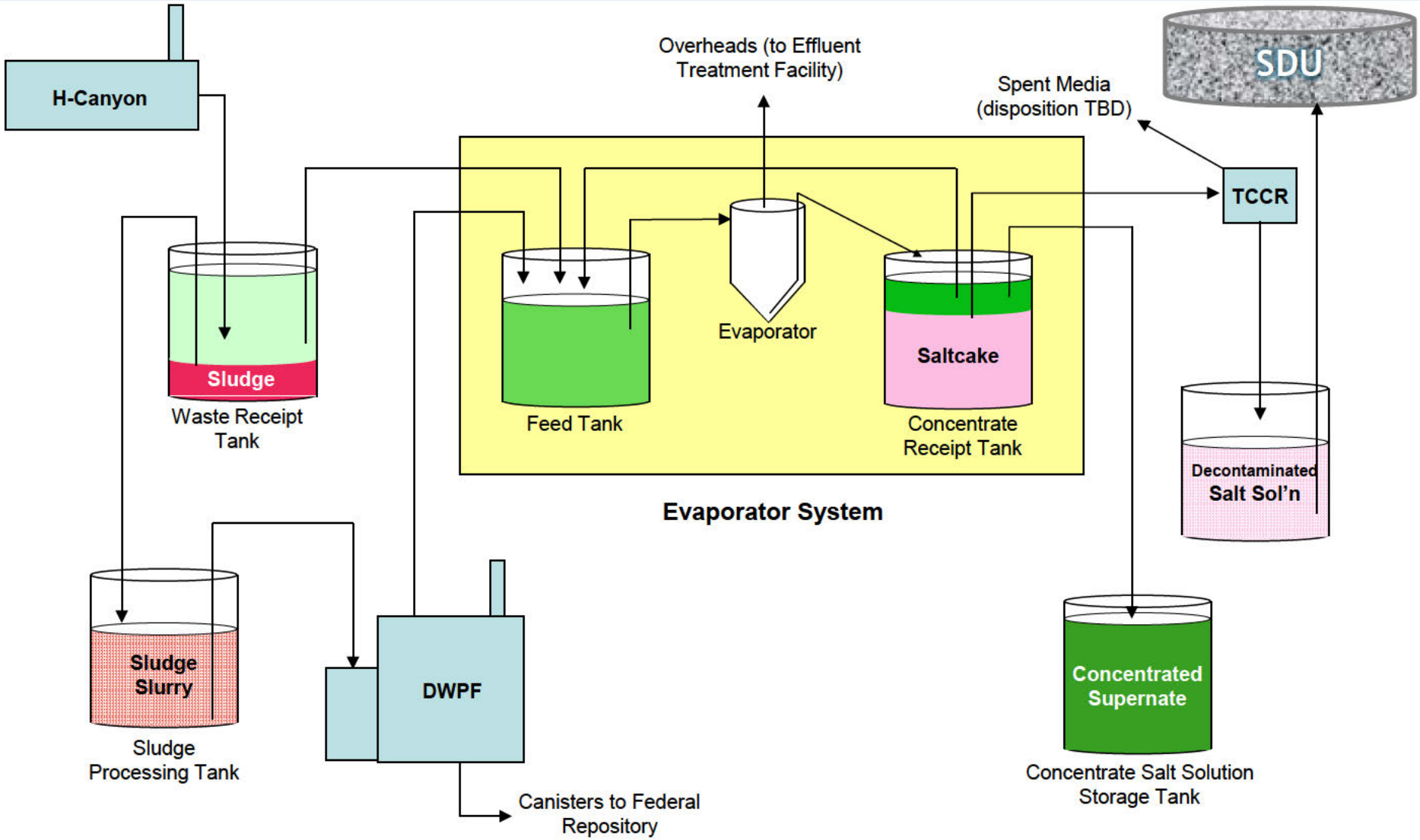

TCCR

We do the right thing.

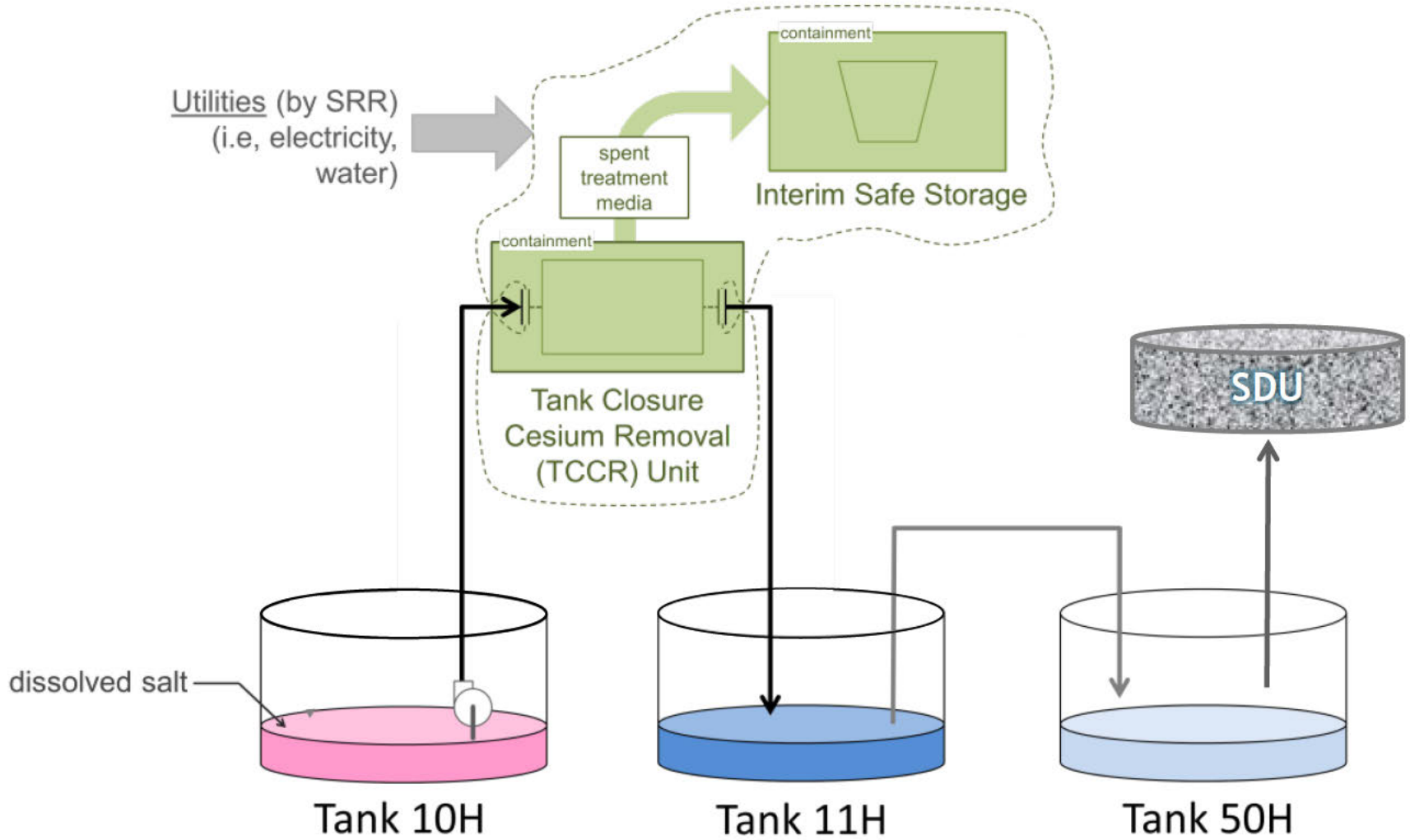

SRS Tank Farm Operations

We do the right thing.

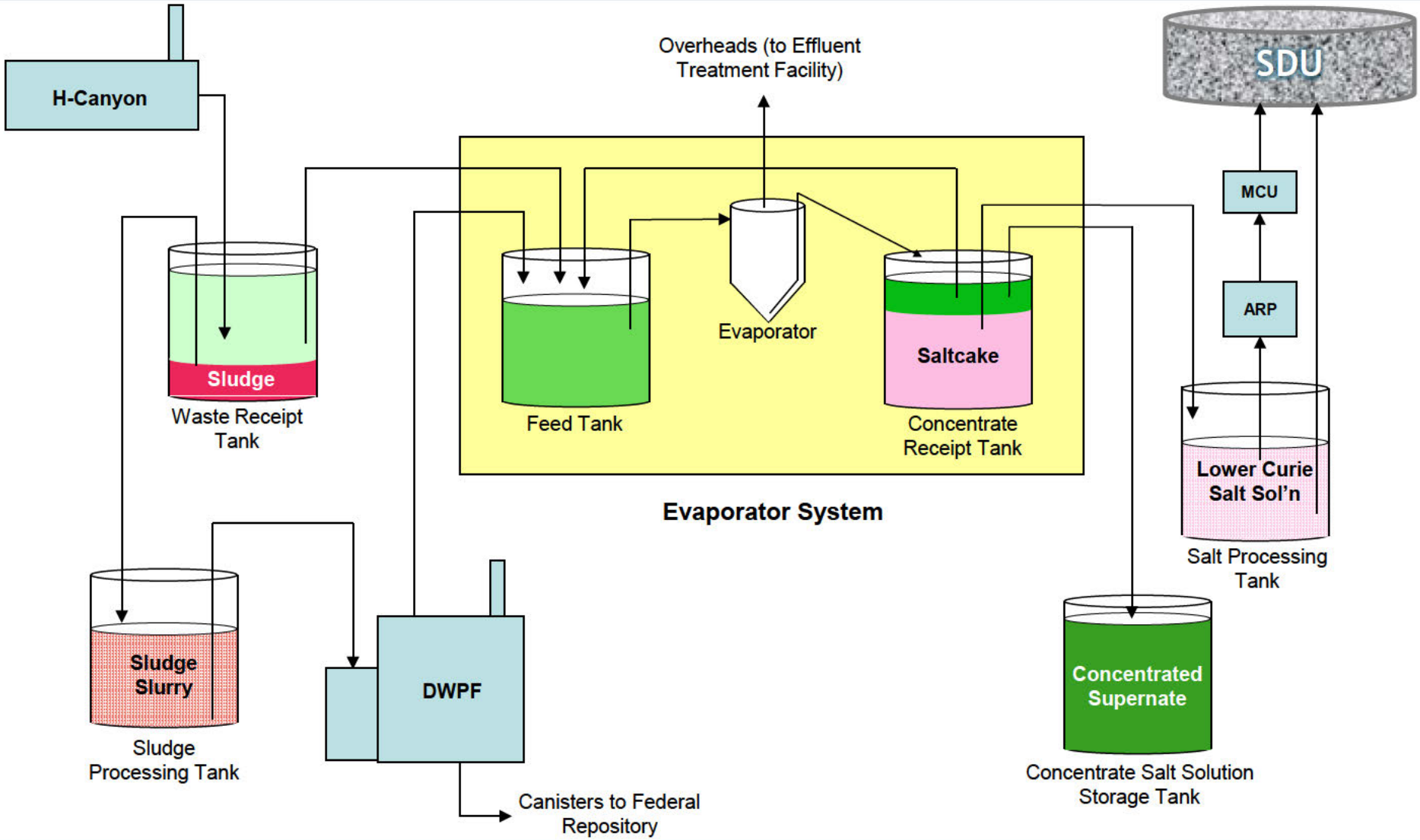

SRS Tank Farm Operations

We do the right thing.

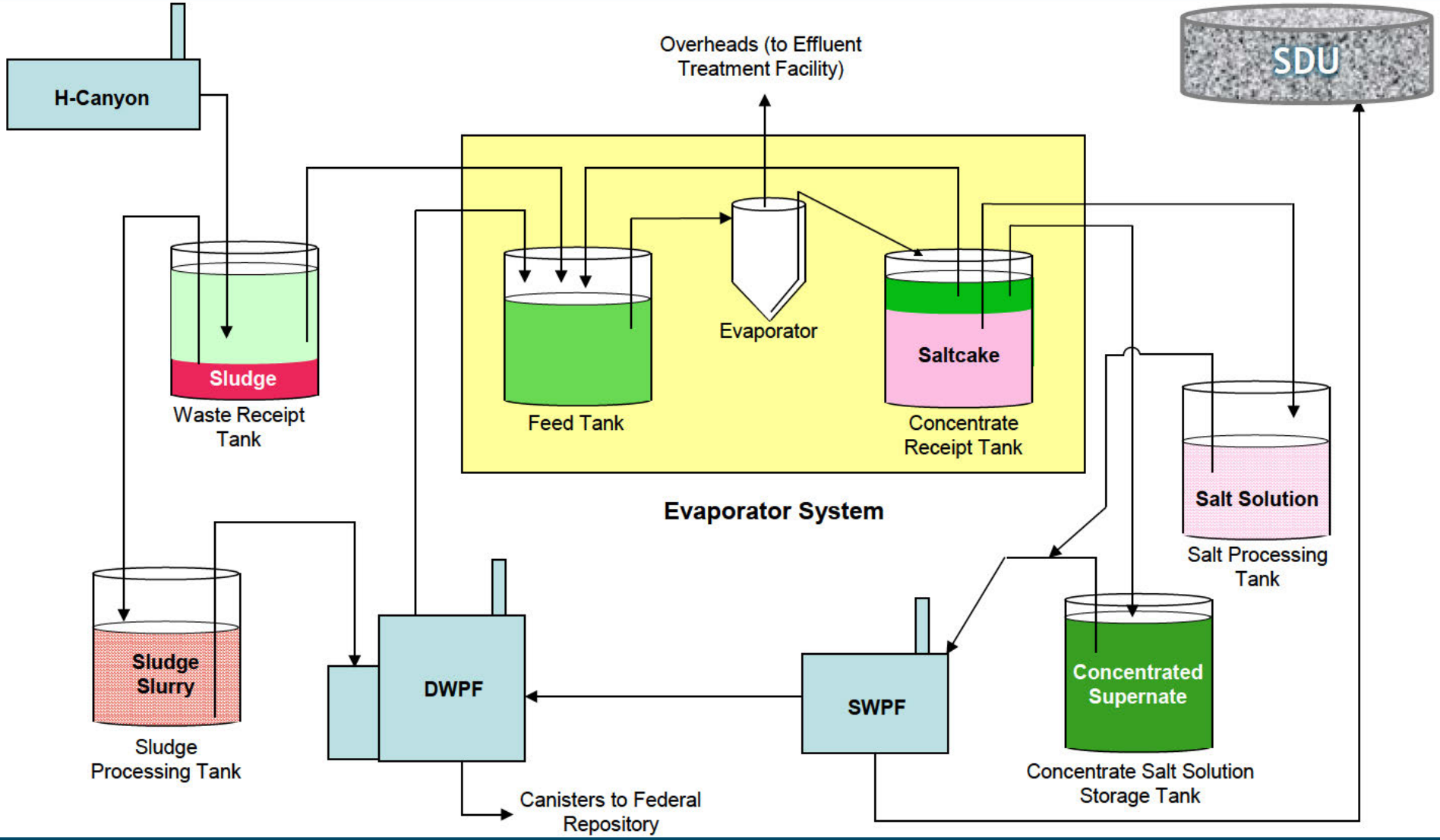

Tank Cracks…

Resulted in Waste Leaking into Annuli of 12 Tanks