Savannah River Remediation
AECOM | BECHTEL | CH2M HILL | B&W | AREVA

INTEROFFICE MEMORANDUM

SRR-WSE-2015-00025, Rev. 1
RSM Track No: 10080

Date: May 10, 2015

To: File

From: T.L. Fellinger, 766-H

<u>Subject:</u> Presentation – Mercury Overview for DWPF

Summary:

A mercury program team was established in February of 2015 to address a letter received from the Department of Energy (DOE). This presentation was made on April 8, 2015 and is a mercury overview of DWPF. This memo serves as documentation of the presentation made to mercury program team. Revision 1 of this memo fixes the inconsistencies and errors found in the time line for the presentation. See Attachment 1 for presentation.

Attachment 1

Savannah River Remediation

AECOM | BECHTEL | CH2M HILL | B&W | AREVA

MERCURY OVERVIEW FOR DWPF

T.L. Fellinger

Date: April 8, 2015

Agenda

We do the right thing.

- Process Overview
  - History
  - Main Flow Paths for Sludge, Salt, and Condensate
  - Overview of Processing Steps in Main Process Vessels (SRAT, SME, and MFT)
  - Overview of PVV and Mercury Transfer Header
  - Information Related to the Condensers (SRAT, SME and FAVC) and Scrubbers (SRAT, SME, and MFT/RCT)
  - Information on Main Hg Collection Vessels - MWWT and SMECT
  - Information on the MOG Off Gas Path
  - Information on DWTT and RCT
  - Information Mercury Purification Cell and Pumps
- Process Timeline and History of Key Events
- Routine Sampling and Process samples
- Mercury data from routine sampling or special sampling that was done
  - Samples sent to SRNL
  - Batch 735 (SMECT, RCT, and OGCT)
- Process or Equipment problems related to Hg
- Overall material balance with respect to Hg
- Gaps in understanding or knowledge with respect to Hg
- Recommendations
- Appendix – Extra Slides
  - Vitrification Building Layout and Tank Acronym List
  - Sludge Batch Qualification vs. WAPS Sample Composition
  - Basic Data Report - Hg Chemistry Summary

History

- DWPF began radioactive operations in 1996 utilizing a sludge only flow sheet
- Integrated Actinide Removal Process (ARP) and Modular Caustic Side Solvent Extraction (MCU) on 6/16/08
- Designed to be the purge point for Hg out of the High Level Waste system
- Design basis for Hg recovery from sludge processing was estimated to be ~ 75%
- DWPF has successfully recovered and removed small volumes elemental Hg in the past

Savannah River Remediation
AECOM | BECHTEL | CH2M HILL | B&W | AREVA

DWPF Main Flow Paths for Sludge, Salt, and Condensate

We do the right thing.

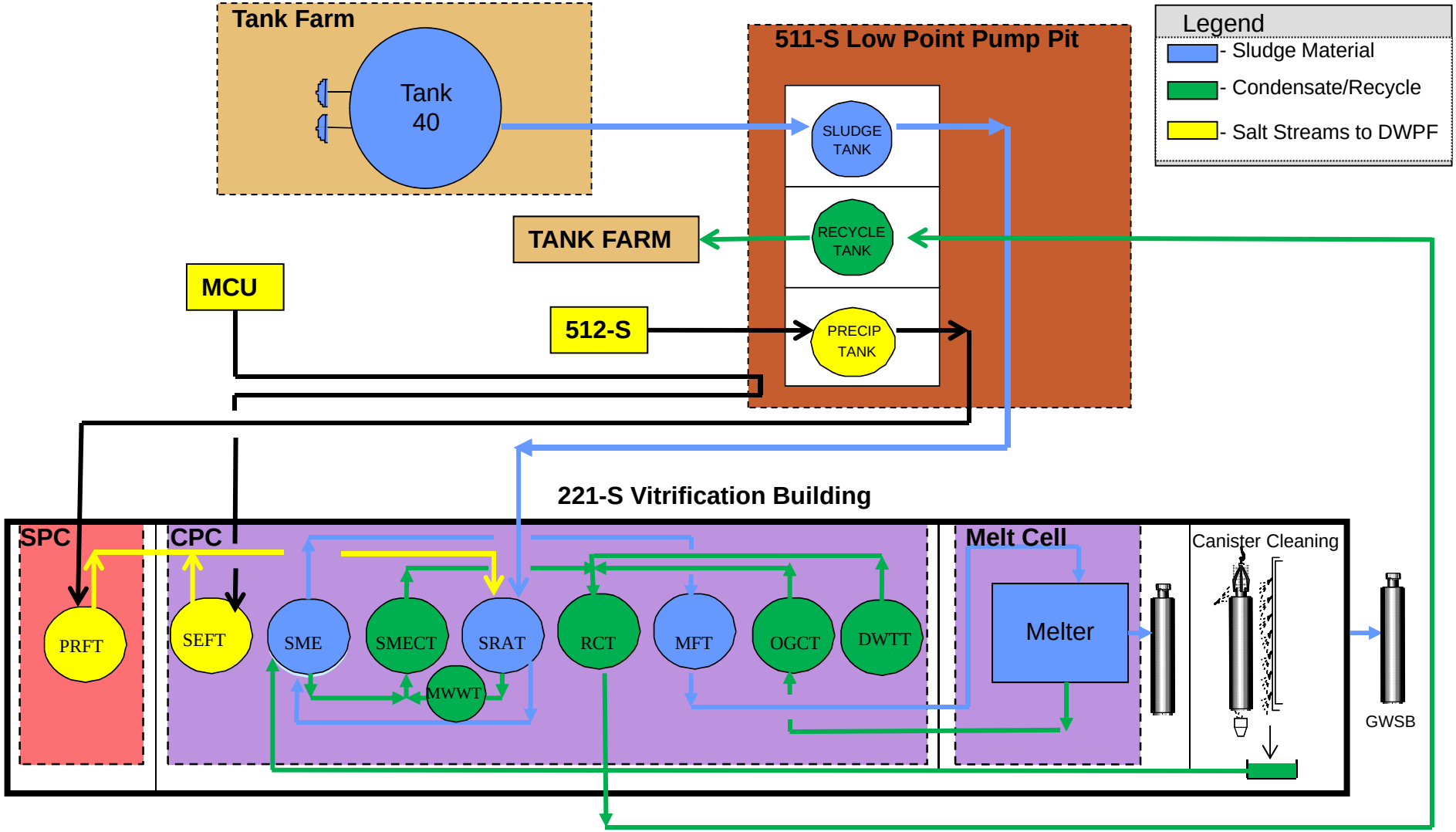

Overview of Main Processing Vessels – SRAT, SME, and MFT

We do the right thing.

SRAT

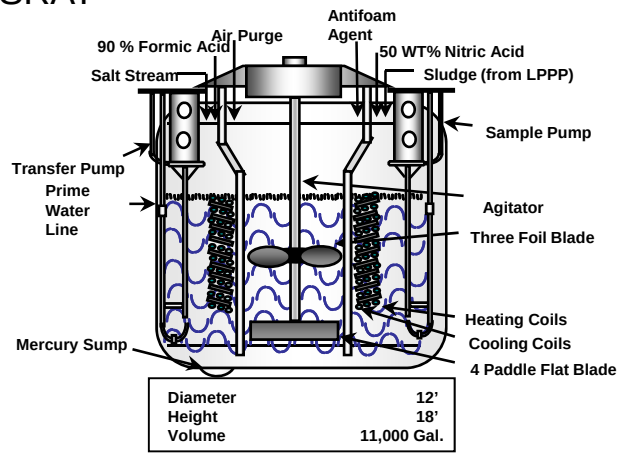

SRAT Process Steps*:

- Two to three transfers from Tank 40 (7200 to 8500 gallons)
- Caustic Boiling to concentrate contents (optional)
- PRFT Additions (Actinide Removal Process – ARP) – (optional)
- Cool Down and Sample Analysis
- Perform Acid Calculation
- Acid Additions (nitric and formic acids) at 93°C
- Concentration/Reflux (Hg Removal to 0.45 wt.%) to 6000 gallons
- SEFT Additions (Strip Effluent – mildly acidic Cs stream) – Optional
- Sample to confirm composition
- Transfer ~4000 to 4500 gallons to SME for further processing

*Antifoam additions made periodically throughout cycle while processing

SRAT Vapor:

- Exits SRAT vessel and enters SRAT Condenser

SME

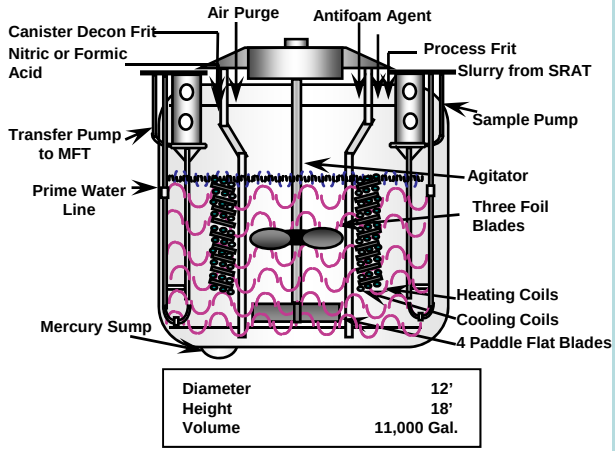

SME Process Steps*:

- Add spent frit from decon cell and 1st batch of process frit (can pre-charge the SME heel with 1 decon canister (800 gallons) prior to start of SME cycle)
- Concentrate mixture
- Receive 2nd batch of process frit
- Concentrate mixture
- Repeat 3rd addition (if necessary)
- Cool down SME
- Sample SME product
- Run final Product Confirmation Calculations (PCCS Model) – quality control
- Transfer ~4000 gallons to MFT for feeding of the melter
- Antifoam additions made periodically throughout cycle while processing. Also, have the capability of adjusting with nitric and formic acids to adjust REDOX or MOG flammability.

SME Vapor:

- Exits SRAT vessel and enters SME Condenser

MFT

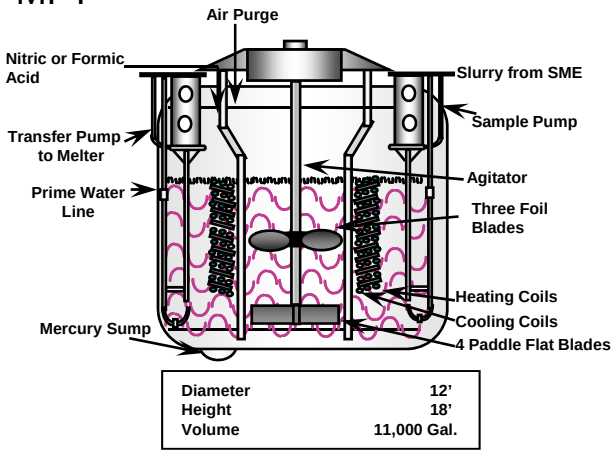

MFT Process Steps*:

- Hold tank for qualified feed to the melter
- 4-5 cans poured per batch process

* Have the capability of adjusting with nitric and formic acids to adjust REDOX or MOG flammability.

MFT Vapor

- Exits MFT vessel and enters RCT/MFT NH3 Scrubber

Savannah River Remediation

AECOM | BECHTEL | CH2M HILL | B&W | AREVA

Overview of PVV and Mercury Transfer Header

We do the right thing.

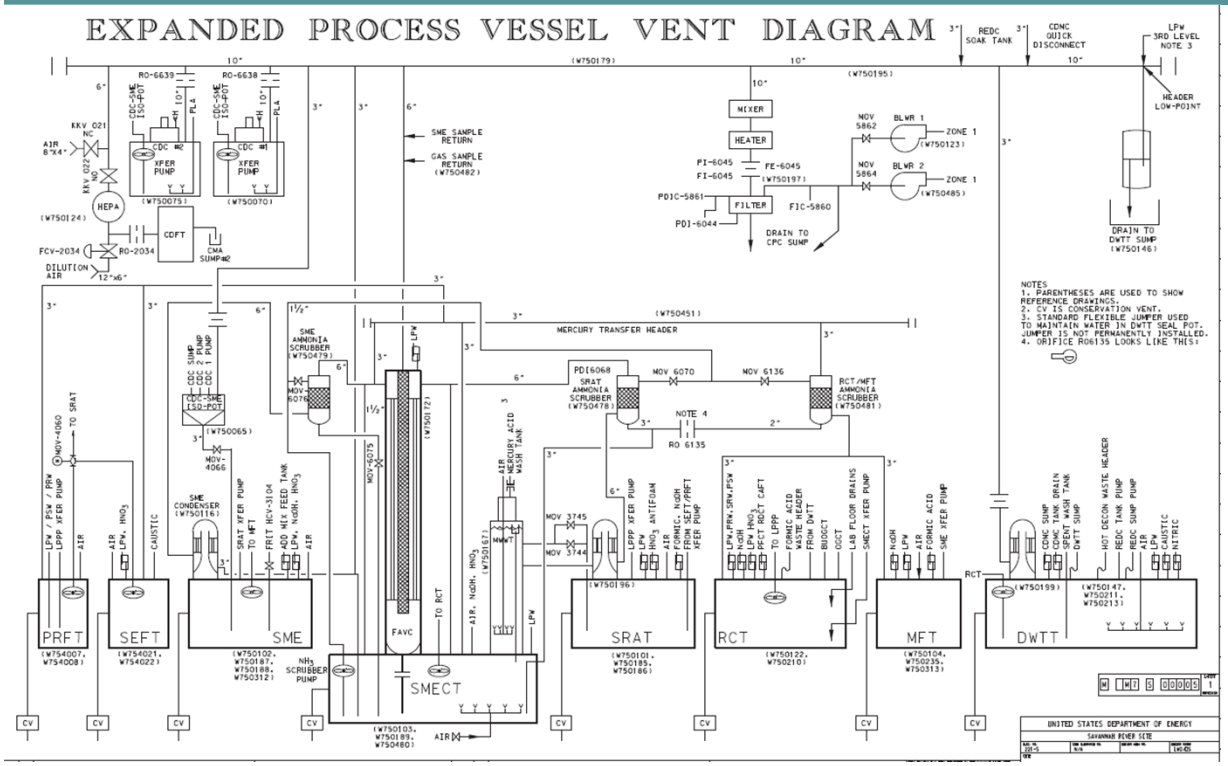

- All process vessels are equipped with Hg sumps
- SRAT and SME NH3 Scrubber vapor is directed toward the FAVC
- PRFT, SEFT, and RCT/MFT NH3 Scrubber vapor is directed toward the Hg transfer header and then to the FAVC
- FAVC vapor is directed toward the PVV header then to Zone 1 ventilation
- Any condensate collected from the FAVC is sent to SMECT
- DWTT is directly connected to the the PVV header
- Mercury Transfer Header is used to transport Hg from process vessels to the SMECT.

Information Related to Condensers and Scrubbers

We do the right thing.

SRAT , SME, and DWTT Condensers:
Diameter: 2 ft wide
Height: 13'6" tall
Surface area: 434ft ^{2}

- Vertical shell and tube heat exchanger with fixed tube sheet
- Vapor is forced down through the tubes while process water flows upward on the shell side
- The vapor is partially condensed
- SRAT condensate enters MWWT and remaining vapor enters SRAT NH3 scrubber
- SME condensate goes to the SMECT
- DWTT condensate is sent back to the DWTT
- Supply is process cooling water
- Controls set to maintain exit vapor temperature of 50˚C
- Spray nozzle at top for flushing tubes

FAVC:
Diameter: 3'3" wide
Height:15'6" tall
HEME: 2 ft wide, 125 inches tall with 3 in. thick Monsanto Type ES fiber bed filter element mounted inside the condenser

- Vertical shell and tube heat exchanger with fixed tube sheet equipped with a HEME filter to prevent any condensate from entering the Process Vessel Vent Header. Maintain vapor temperature less than 10 ˚C.
- Vapor forced down through the tubes and flows through the HEME while process chilled water flows upward on the shell side.

SRAT, SME, RCT/MFT NH3 Scrubbers:
Packing: 1" Interlox Saddles

- SRAT liquid flow 20gpm, vapor flow 1828.4 lb/hr, packing height 8.5 ft., column diameter 20", and max. allowable delta P for vapor 7.1 in W.C.
- SME liquid flow 10gpm, vapor flow 724.5 lb/hr, packing height 4.5 ft., column diameter 12", and max. allowable delta P for vapor 4.7 in W.C.
- MFT/RCT liquid flow is 5 gpm, vapor flow 368 lb/hr, packing height 5.0 ft., and column diameter 10", and max. allowable delta P for vapor 1.4 in W.C.
- Inlet vapor temperature 50˚C
- Supply liquid for the NH3 scrubbers is the condensate collected in the SMECT. The pH is maintained below 2.8 with nitric acid. Temperature of the supply liquid is 15 to 20 ˚C

Processing Observations:

- In the past, the vapor leaving the SRAT condenser could be as high as 60˚C to 70˚C for short periods of time.
- Carryover events from the SRAT and SME can deposit solids in the condensers and NH3 Scrubber and are a likely source for elemental Hg holdup.
- The FAVC vapor temperature ranges from 8 ˚C to 12 ˚C during processing.
- Recent delta P for SRAT, SME, and MFT/RCT scrubbers, during processing of Batch 735, are ~+2 in WC, +23 in WC, and +10 in WC, respectively.

Information on Main Hg Collection Vessels - MWWT and SMECT

We do the right thing.

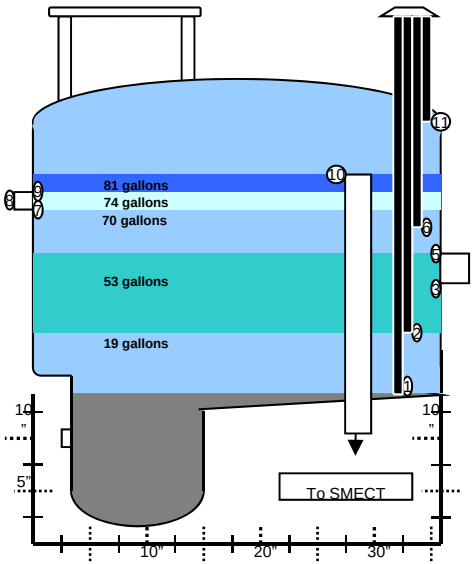

Prior to concentration – 71-73 gallons
Concentration – 82-83 gallons
Reflux – 75 -78 gallons

1	Bubbler dip tube D leg (mercury)
2	Bubbler dip tube B leg (Level)
3	Condenser Nozzle bottom
4	Condenser Nozzle middle (3")
5	Condenser Nozzle top (liquid seal)
6	Bubbler dip tube A leg (Den.)
7	Reflux return Bottom
8	Reflux return middle (1")
9	Reflux return Top
10	SMECT overflow riser
11	Bubbler dip tube C leg (Pres.)

- Receives and sends condensate back from/to the SRAT to maintain desired level in the SRAT during boiling conditions
- 110 gallon tank. Contains a weir to minimize floating elemental Hg beads going to SMECT
- Is the tank utilized to send recovered Hg to the mercury purification cell
- The pH of the MWWT solution could change based on SRAT processing
- Could contain sludge solids from carryover events
- 2.17 inches of water column is equivalent 6.57 gallons per S350-ZZZL-3742

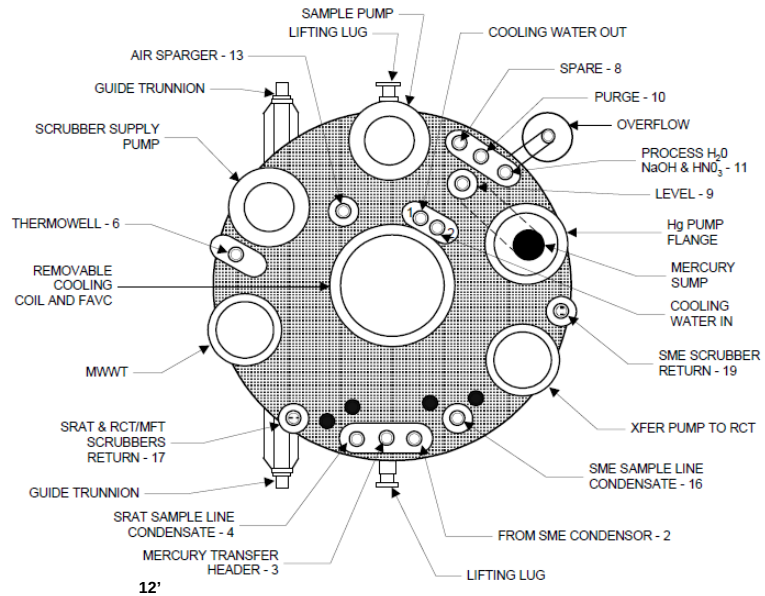

Diameter	**12'**
Height	**18'**
Volume	**11,000 Gal.**

- Receives condensate from the SRAT, SME and FAVC
- Needs a minimum level of ~4000 gallons to supply NH3 Scrubbers
- pH is maintained below 2.8 with nitric acid
- On-line continuous monitoring of pH during processing
- Could contain sludge solids from carryover events
- Collection point for elemental Hg from the scrubbers
- Can receive Hg from process vessels via the Hg Transfer Header
- Frequent transfers are made to the RCT
- Hg sump and trough hold approximately 10 gallons

Information on the MOG Off Gas Path

We do the right thing.

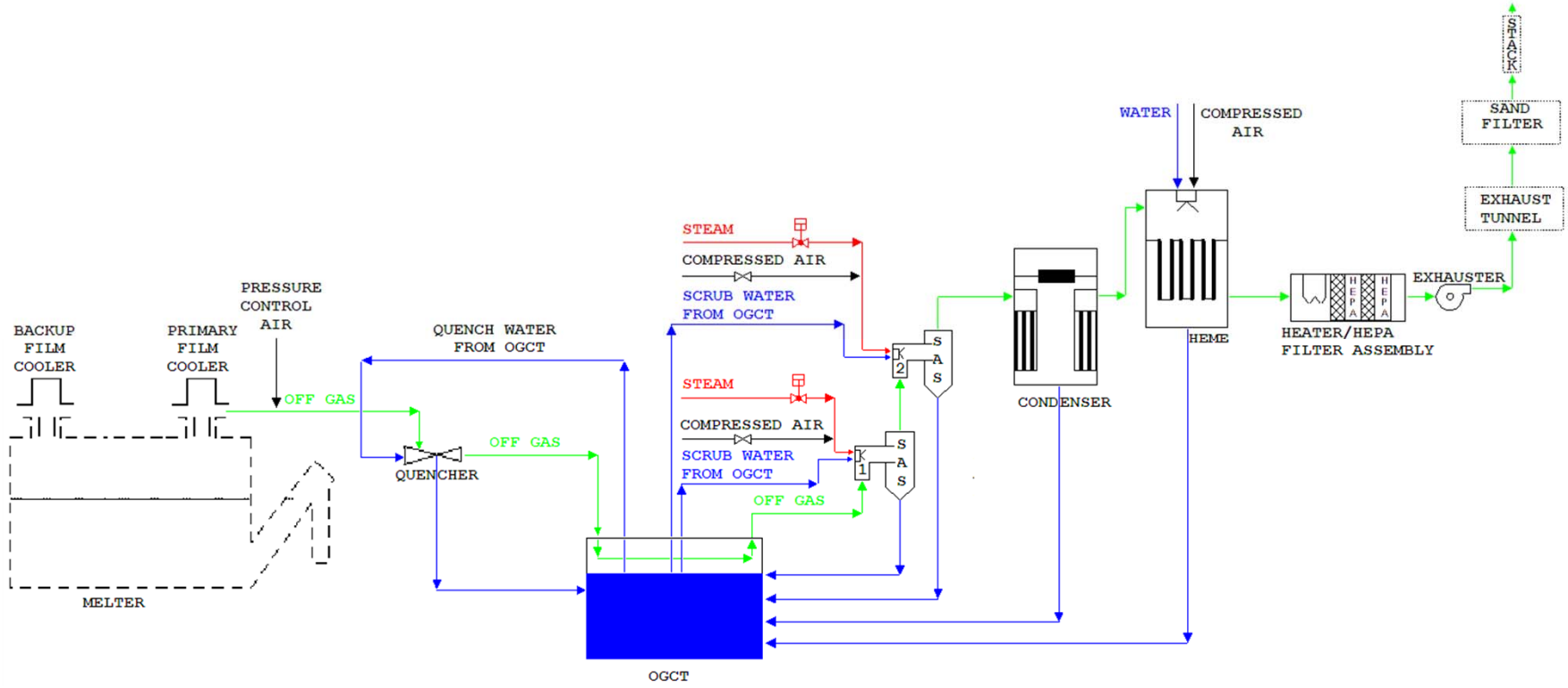

- Any Hg not removed in CPC operation will be sent to the melter via MFT
- Melter is operated at 1150 ˚C. Vapors are cooled to ambient temperature by time they reach the OGCT.
- Hg compounds will volatilize from the melter and collect in the OGCT
- Frequent transfers are made from the OGCT to the RCT
- Due to particulate/solids collection in the OGCT, the agitator is not operated
- Cleaned with nitric acid to remove solids collected periodically

Information on the DWTT and RCT

We do the right thing.

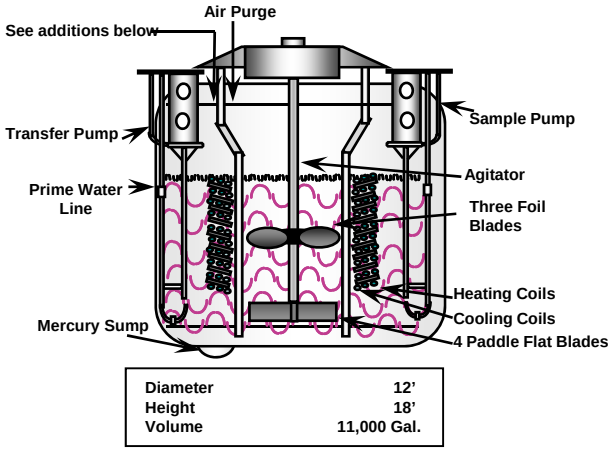

- Hot and Warm Decontamination Waste headers, the Contact Decontamination and Maintenance Cell tank drain pump(decontamination waste solutions from the vessels being decontaminated in the CDMC) and sumps, the Remote Equipment Decontamination Cell tank drain pump (decontamination waste solutions from the vessels being decontaminated in the REDC) and sump, and filter, the spent wash tank (spent wash water, spills, drains and overflows from the Mercury Purification Process), the DWTT sump [DWTT overflows and condensate from the process vessel vent header (PVVH)], the DWTT reflux condenser, dissolving spent HEME/HEPA filter dissolutions, etc.
- Ensuring the pH is at 7.0 prior to transfer to the RCT.

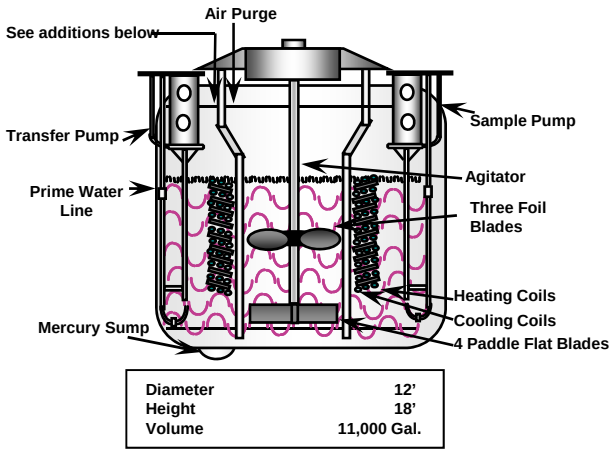

- Collects waste solutions from SMECT, OGCT, BUOGCT, DWTT, formic acid waste header, floor drain catch tank organic acid drain catch tank, regulated drains collection tank, effluent retention tank, Catalyst feed tank, generator purge pump, deionized water purge header, process cooling water purge header, process chilled water purge header, and sample/analytical lab waste.
- Adjusting the pH of the collected waste solutions with caustic
- Adjusting the corrosion inhibitor concentration of the collected waste solutions with sodium nitrite
- Currently, still doing pre-charge of caustic to heel of RCT

Mercury Purification Cell and Pumps

- There are two mercury pumps in the CPC; one in the MWWT and a mobile CPC mercury pump currently located in the SMECT. The MWWT mercury pump sends mercury directly to the mercury purification cell. The mobile CPC mercury pump can be placed in the SMECT, SRAT, SME, MFT, OGCT, RCT, or the SEFT
- The SMECT and SRAT pump mercury directly to the MWWT; all other tanks pump mercury to the SMECT via the mercury transfer header before being transferred to the MWWT and then ultimately to the purification cell.
- The mercury purification cell primarily consists of two tanks and two scrubbers. Material from the Mercury Acid Wash Tank (5 gallon capacity) is pumped through two scrubbers for cleaning with nitric acid and water before finally ending up in the Mercury Hold Tank
- A pump is connected to the MHT to re-circulate mercury through the tank before ultimately filling up bottles for disposal from the facility.

Timeline

SEE HANDOUT

Cold Run Demonstrations Batches 1-19

Demonstrated functionality of Systems and Unit Operations including Hg Removal

- Incoming sludge: 3.0 wt.% Hg total dried solids limit set for DWPF.
- SRAT Product: 0.45wt% Hg total dried solids limit set for DWPF.

Start: 3/6/1996 Finish: 9/12/1998

SLUDGE BATCH 1A – Hg Concentration Less Than 100 mg/Kg sludge slurry

Started radioactive operations:
- Sludge - Only Operations
Feeding from Tank 51
Sludge Batch 1A comprised of sludge from : Tank 17, 18, 21, and Tank 22
- Added dilute formic acid/copper nitrate stream to substitute for PHA (old salt process)

Batches: 20 - 93
Can Production: 495 cans
Frit : 200
WL Target : 28%

Notes:
- Dow Corning 544 Antifoam used in the process
- REDOX target used equation (F-N)
- R&D complete in 1997 to make flowsheet change to concentrated acid

Start: 10/11/1998 Finish: 11/11/2001

SLUDGE BATCH 1B – Hg Concentration 1410 mg/Kg sludge slurry

Sludge - Only:
- Feeding from Tank 51
Sludge Batch 1B comprised of sludge from : Heel of SB1A and Al dissolved Tk 42

Batches: 94 - 208
Can Production: 726 cans
Frit : 200
WL Target:28%

Notes:
- Dow Corning 544 Antifoam used in the process
- REDOX target switched to equation (F-3N)
- Hg Recovered, processed, and sent back to H-Canyon (~5.39 gallons).
-Sludge was noted to be tacky and adhering to surfaces in the DWPF lab.

Start: 12/18/2001 Finish: 3/9/2004

SLUDGE BATCH 2 – Hg Concentration 496 mg/Kg sludge slurry

Sludge-Only:
- Feeding from Tank 40
Sludge Batch 2 comprised of sludge from : Tanks 8, 17, 18, 22, and 42(heel)

Batches: 208-272
Can Production: 364 cans
Frit : 200 and 320
WL Target: 28-32 %

Notes:
- Antifoam IIT747
- Processing issues with air entrainment and rheology
- SME failure and melter replacement 10/18/02
- Hg recovered, processed, and sent Solid Waste(~6.2 gallons).
- "Mercury emissions from the Zone 1 exhaust stack are limited by an environmental permit to 0.0168 pph. Mercury monitoring downstream of the stack exhaust was originally required by DHEC, however they no longer require the monitoring because the limit is greater than the highest possible mercury content (assuming the mercury content is reduced to saturation at the respective condensers maximum air flow rates and exit temperatures). The monitors were abandoned in place in 2003."

Start: 3/23/2004 Finish: 4/6/2007

SLUDGE BATCH 3 – Hg Concentration 300 mg/Kg sludge slurry

Sludge-Only:
- Feeding from Tank 40
Sludge Batch 3 comprised of sludge from : Heel of SB2, Tk 7 (Tk 18/Tk 19). Oxalate and Coal thought to be high, but were not.
F& H-Canyon receipts into SB3: Am/Cm, Pu/Gd, and Np

Batches: 273-402
Can Production: 726 cans
Frit: 418 and 202
WL Target: 34%

Notes:
- Antifoam IIT747
- Raised wash endpoint from 0.5M Na to ~1M
- Implemented new REDOX correlation assigning coefficients to Nitrogen and Carbon source.

Start: 5/30/2007 Finish: 11/26/2008

SLUDGE BATCH 4 – Hg Concentration 1259 mg/Kg sludge slurry

Sludge-Only and Coupled Operation:
- Feeding from Tank 40
Sludge Batch 4 comprised of sludge from : Large heel of SB3, Tk 11 .
H-Canyon receipts into SB4: None

Batches: 402B-467
Can Production: 314 cans
Frit: 418 and 510
WL Target: 34%

Notes:
- Antifoam IIT747
- Coupled Operation started on 6/16/2008
- Al and Hg are higher
- Longer cycle times and more frequent additions of antifoam
- Catalytic hydrogen production in Shielded Cells Run high. Repeated run.

Start: 12/01/2008 Finish: 6/3/2010

SLUDGE BATCH 5 – Hg Concentration 2305 mg/Kg sludge slurry

SALT BATCH 1 – Hg Concentration 9.75 mg/L (Start: 4/25/2008)

SALT BATCH 2 – Hg Concentration 10.2mg/L (Start: 1/22/2009)

Sludge-Only and Coupled Operation:
- Feeding from Tank 40
Sludge Batch 5 comprised of sludge from : Tank 11 Al dissolution, Tank 7, and heel from SB4.
H-Canyon receipts into SB5: Pu/Be/Gd

Batches: 468-530
Can Production: 323 cans
Frit: 418
WL Target: 34%

Notes:
- Antifoam IIT747
- Longer cycle times due to Hg concentration and more frequent additions of antifoam
- Catalytic hydrogen production observed in DWPF . pH of SRAT/SME products very high.
- Installed Isolok sampler on SRAT. Eliminated small sample stream going to the RCT.
- Collected ~5 gallons of Hg in 2008. Sitting in a 5 gallon bucket in the purification cell.
- Replaced the MWWT in Jan 2009. Prior to replacement ,~ 2 gallons of Hg was sent to the Hg purification cell and 4 gallons remain in the MWWT.
- Mercury that was successfully removed from the tank (approximately 2 gallons) clogged up tanks in the purification cell. Likewise transfers made in July 2008 clogged up a tank in the purification cell. Also, noted floating material on the surface of tank. Appeared to be some sort of organic material, but not confirmed.
- 2010 outage revealed mercury buildup in the SRAT condenser and SRAT scrubber
- Hg probe in SMECT indicated 2", but prone fluctuations.
- SRAT Product limit raised to 0.60 wt.% Hg total dried solids.

Start: 6/18/2010 Finish: 5/6/2011

SLUDGE BATCH 6 – Hg Concentration 3592 mg/Kg sludge slurry

SALT BATCH 3 – Hg Concentration 32.4 mg/L (Start: 5/28/2010)

Sludge-Only and Coupled Operation:
- Feeding from Tank 40
Sludge Batch 6 comprised of sludge from : Tank 12 - Al dissolution, Tank 4, heel from SB5
H-Canyon receipts into SB6: Pu/Gd

Batches: 531-570
Can Production: 194 cans
Frit: 418
WL Target: 36%

Notes:
- Antifoam IIT747
- Highest Hg concentration observed to date. Longer cycle times due to Hg concentration and more frequent additions of antifoam. pH of SRAT/SME products very high.
- SRAT Product limit raised to 0.80 wt.% Hg total dried solids
- 8/2010 Reduced steam flow to SAS#1 from 370pph to 185pph.
- Bubblers installed in the melter 9/2010.
- PISA declared due to amount of antifoam going to the melter, due to long cycle time. Revised Calculation X-CLC-S-00164 to include carbon speciation.

Start: 6/2/2011 Finish: 12/31/2011

SLUDGE BATCH 7A – Hg Concentration 2241 mg/Kg sludge slurry

SALT BATCH 4A – Hg Concentration 32.2mg/L (Start: 7/23/2011)

SALT BATCH 4B – Hg Concentration 40.6 mg/L (Start: 9/20/2011)

Sludge-Only and Coupled Operation:
- Feeding from Tank 40
Sludge Batch 7A comprised of sludge from: Tank 4, 7, 12 and heel from SB6.
H-Canyon receipts into SB7A: Pu/Gd

Batches: 570B-608
Can Production: 198 cans
Frit: 418
WL Target: 36%

Notes:
- Antifoam IIT747 . Study undertaken to understand antifoam performance, degradation products and improved effectiveness. Report issued 9/2011
- 6 month batch
- Coil fouling issues noted.

Start: 1/09/2012 Finish: 5/7/2013

SLUDGE BATCH 7B – Hg Concentration 1713 mg/Kg sludge slurry

SALT BATCH 5 – Hg Concentration 68.3mg/L (Start: 8/31/2012)

SALT BATCH 6A – Hg Concentration 65.8 mg/L (Start: 1/25/2013)

SALT BATCH 6B – Hg Concentration 59.4mg/L (Start: 3/2/2013)

SALT BATCH 6C– Hg Concentration 54.8mg/L (Start: 3/22/2013)

SALT BATCH 6D– Hg Concentration 51.5 mg/L (Start: 4/17/2013)

Sludge-Only and Coupled Operation:
- Feeding from Tank 40
Sludge Batch 7B comprised of sludge from: Tank 7 and Heel of SB7a .
H-Canyon receipts into SB7B: None

Batches: 609-670
Can Production: 310 cans
Frit: 418
WL Target: 36%

Notes:
- Antifoam IIT747
- Carryover events noted in SME
- PISA declared for sludge solids carryover in recycle on 11/8/2012. Compensatory action required pre-caustic adjustment of the RCT.
- DWPF Review Team 2/2013. Noted issues with Hg recovery.

Start: 5/07/2013 Finish: Present

SLUDGE BATCH 8 – Hg Concentration 2192 mg/Kg sludge slurry

SALT BATCH 7A– Hg Concentration 68.1 mg/L (Start: 3/26/2014)

SALT BATCH 7B– Hg Concentration 68.7 mg/L (Start: 5/25/2014)

Sludge-Only and Coupled Operation:
- Feeding from Tank 40
Sludge Batch 8 comprised of sludge from: Tank 7, Tank 12 (remaining), Tank 13 and Heel of SB7B
H-Canyon receipts into SB8: Pu

Batches To Date : 671-to date
Can Production to Date: 314 cans
Frit: 803
WL Target: 36%

Notes:
- Antifoam IIT747
Sampling plan developed to sample SRAT sump, MWWT, and SMECT.
- Hg samples retrieved from the SRAT sump, MWWT sump, and SMECT sump on 11/2013 and sent to SRNL for analysis.
- Melter is currently unbubbled due to the PISA declared

Process Samples/Routine Samples

We do the right thing.

Vessel*	Sampled For Hg?	Notes
SRAT – Receipt	Upon engineering request	Sampled for the first 10 batches of a new Sludge Batch. Sampling typically suspended after WAPS sample obtained
SRAT – Product	Upon engineering request	Recently suspended sampling of the product
SME Product	Upon engineering request	Has been completed in the past for SB5 and SB6
MFT Product	Upon engineering request	N/A
SMECT	Upon engineering request	Has been completed in the past and recently for SB8
PRFT	No	Based on unit operations, it was thought that majority of the Hg would stay with the salt solution.
SEFT	No	Based on sampler configuration and limit of Isopar L in RCT, this tank is not sampled. Based on unit operations, it was thought that majority of the Hg would stay with the salt solution
RCT	Upon engineering request	Has been completed in the past and recently for SB8
OGCT	Upon engineering request	Has been completed in the past and recently for SB8
BOGCT	Upon engineering request	N/A
DWTT	Upon engineering request	N/A

*MWWT does not have sampling capability

Mercury Data from Routine Sampling or Special Sampling that was Done

We do the right thing.

Sample	Method	Result - mg/L unless otherwise indicated	Report/Memo
SMECT-4	CVHg	170	WSRC-TR-2004-00575
SMECT-D	CVHg	110	WSRC-TR-2004-00575
OGCT	CVHG	2	WSRC-TR-2004-00577
OGCT	SEM	Detected Hg in the solids	WSRC-TR-2005-00141
DWTT- SME Coil Decon	CVHg	1.91	WSRC-TR-2005-00036
DWTT- HEME Dissolution	CVHg	1	WSRC-TR-2005-00036
RCT	CVHg	16	WSRC-TR-2004-00577
PRFT	CVHg	22.4	SRNL-STI-2013-00735
Quencher	ICP-ES	Range 0.12-0.15 wt.%	WSRC-STI-2007-00262
SAS	XRD	Calomel	WSRC-STI-2007-00262
SAS	ICP-ES	Range 3.42 -6.57 wt.%	WSRC-STI-2007-00262
SAS - Water Leach	ICP-ES	Range 0.352-0.427 wt.%	WSRC-STI-2007-00262
SME Coil Sample	CVHg	Range 2470-6160 ug/g	SRNL-STI-2011-00623
SME Bulk Sample	CVHg	Range 501-610ug/g	SRNL-STI-2011-00623
Quencher Sample	ICP-ES	2.37 wt.%	SRNL-STI-2011-00520
GC HEME/HEPA/HEPA	XRD	Hg4(OH)(NO3)3 and Hg10(OH)4(NO3)6	SRNL-STI-2009-00602
GC HEME	CVHg	Dissolved in Nitric - 59wt.%	SRNL-STI-2009-00602
GC Line Particulate Material	XRD	Hg3CO3(OH)•2H2O	SRNL-PSE-2007-00095
SRAT Sump Sample	CVHg	557,000 mg/kg	SRNL-L3100-2014-00038
MWWT Hg Sump Sample	CVHg	845,000 mg/kg	SRNL-L3100-2014-00038
MWWT Hg Sump Sample - Solids	CVHg	436,000 mg/kg	SRNL-L3100-2014-00038
SMECT Hg Sump Sample	CVHg	784,000 mg/kg	SRNL-L3100-2014-00038
SMECT Hg Sump Sample Aqueous	CVHg	8, 390 mg/kg	SRNL-L3100-2014-00038
RCT Sample	CVHg	1.20 wt.%	SRNL-STI-2014-00603

Batch 735 – Results for the SMECT During SRAT Processing

SMECT Soluble Sample Results	Average Sample Results (mg/Kg)	STDEV	%RSD
Prior to Start of SRAT Cycle - Baseline	450	7.99E+00	1.8
Nitric Acid Addition	701	7.95E+01	11.3
Formic Acid Addition	876	5.66E+01	6.5
Concentration Mode	1000	3.60E+01	3.6
SEFT Addition	450	1.78E+01	4.0
End of SRAT cycle	326	2.54E+01	7.8

Batch 735 – Results for the SMECT During SME Processing

SMECT Soluble Sample Results	Average Sample Results (mg/Kg)	STDEV	%RSD
After Second Decon Canister	285	6.72E+00	2.36
After Last Decon Canister	154	1.48E+01	9.60
After first drop	151	7.64E+00	5.1
End of SME cycle	131	8.72E+00	6.6

Batch 735 – RCT Results for Total Hg

RCT Total Sample Results	Average Sample Results (mg/Kg)	STDEV	%RSD
Batch 4589 - SMECT Condensate from the SRAT	270	5.46E+00	2.0
Batch 4590 - SMECT Condensate from the SRAT	369	5.61E+01	15.2
Batch 4591 - SMECT Condensate from the SME	246	3.50E+01	14.2
Batch 4592 - SMECT Condensate from the SME	159	3.13E+01	19.7

Hg Balance for DWPF

SEE HANDOUT

DRAFT Summary Table - Mercury Based on DWPF Operation

Sludge Batch	Batch Numbers	Mass of Hg in Kg - Received into DWPF	Gallons of Hg - Received into DWPF	Mass of Hg in Kg - Remaining in SRAT Product	Gallons of Hg - Remaining in SRAT Product (assuming elemental)	Mass of Hg in Kg - Remaining in SME Product	Gallons of Hg - Remaining in SME Product (assuming elemental)	Kgs Lost in air emissions per methodology in SRNS-J2210 2013-00046*	Hg Recovered in Kgs (Includes H-Canyon and Solid Waste and ~76 gallons detected in SMECT and MWWT)	Mass in Kgs of Hg Potentially Sent from SMECT to RCT	Gallons of Hg Potentially Sent from SMECT to RCT	Mass of Hg in Kgs - Potentially Sent to the Melter	Kgs Lost in air emissions per methodology in SRNS-J2210-2013-00046	Gallons Lost in Air Emissions	Mass of Hg Potentially in the OGCT	Hg in Gallons - Potentially Sent to the Melter and Potentially in Recycle from OGCT (assuming elemental)
1A	20-93	239	4.65	207	4.02	0	0.00	0.09		32	0.63	207	156.79	3.05	50	0.97
1B	94-207	5248	101.99	859	16.69	0	0.00	0.13	278	4111	79.90	859	229.95	4.47	629	12.22
2	208-272	861	16.74	211	4.10	0	0.00	0.07	318	333	6.46	211	115.29	2.24	96	1.86
3	273-402	1234	23.99	361	7.02	0	0.00	0.13		873	16.96	361	229.95	4.47	131	2.55
4	402B-467	2723	52.93	537	10.43	0	0.00	0.06		2186	42.49	537	99.46	1.93	437	8.50
5	468-530	4756	92.43	978	19.01	0	0.00	0.06	566	3212	62.42	978	102.31	1.99	876	17.02
6	531-570	4707	91.49	2047	39.78	1343	26.11	0.04		1317	25.61	3390	61.45	1.19	3328	64.69
7A	570B-608	2998	58.28	1786	34.71	217	4.22	0.04		995	19.35	2003	62.71	1.22	1940	37.71
7B	609-670	3521	68.42	1558	30.29	1327	25.79	0.06		635	12.34	2885	98.19	1.91	2787	54.17
8	671-to date	5005	97.26	1316	25.58	0	0.00	0.06	3936	-248	-4.82	1316	99.46	1.93	1217	23.65
Sum		**3.13E+04**	**608**	**9.86E+03**	**192**	**2.89E+03**	**56**	**0.73**	**5.10E+03**	**1.34E+04**	**261**	**1.27E+04**	**1.26E+03**	**24**	**1.15E+04**	**223**

* Calculation based on canister production. Values reflect elemental Hg Only

** Does not account for elemental Hg contained in CPC Sump #1 or consider any hold up in the ventilation systems

Process or Equipment Problems related to Hg

- Hg accumulation is occurring in DWPF. The SMECT and MWWT are indicating that Hg is present in the sumps
- Updating/confirming the Hg chemistry/assumptions made in the Basic Data Report.
- The delta Ps indicate that the SME and RCT/MFT scrubbers may be plugged.
- Based on process history of carryover events, condensers may not be performing optimally. Process carryover events deposit solids and create sites for Hg accumulation in equipment.
- Several samples have been obtained and analyses have been performed related to partial plugs in the off gas systems for the CPC and Melter. Partial plugs have caused down time in the facility.
- It appears the majority of the Hg is being solubilized in the SMECT and being sent back to the Tank Farm. This may be due to the large amount of elemental Hg residing in the SMECT.
- Operation of the Hg Purification Cell equipment has been difficult due to numerous plugs, samples should be pulled to identify what is causing the plugs

Gaps in Understanding-Recommendations

- Obtain remaining data for Batch 735
- The impact of antifoam and solvent degradation products on Hg speciation for DWPF recycle streams
- Why Hg is present in the 2 results for the SEHT samples.
- Removing Hg from the MWWT/SMECT to reduce the amount of Hg sent back in the recycle stream
- The PRFT sample analyzed by SRNL indicated Hg was present. Analysis should be performed for the PRFT to determine if Hg is present
- Due to the potential introduction of Hg from the PRFT and SEFT, the SRAT product analysis should be resumed to ensure Hg endpoint is achieved
- More data should be collected to confirm the Hg behavior of the SMECT, RCT, and OCGT results of Batch 735. SRAT and SME product data should also be obtained

Gaps in Understanding-Recommendations

- Clean/replace the scrubber baskets to reduce the high delta P observed for SME and RCT/MFT scrubber
- Flushing/cleaning SRAT/SME condensers
- Spare Hg pumps should be made available
- Sample and analyze the solids plugging the vessels in the Hg Purification Cell
- Restore operation of the Mercury Purification Cell

Vitrification Building Layout and Tank Acronym List

We do the right thing.

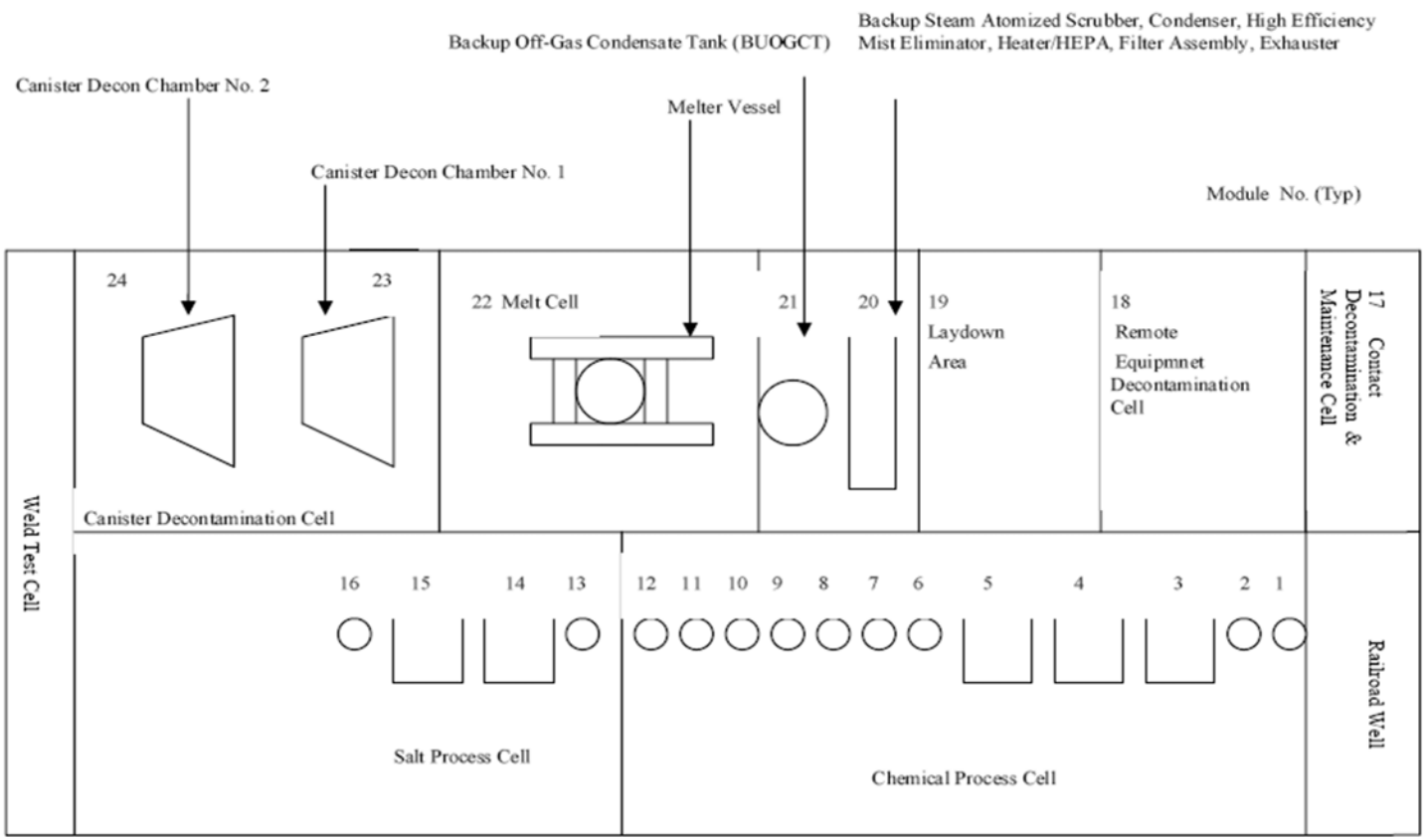

1. Decon Waste Treatment Tank (DWTT)
2. Process Vessel Vent Filter (PVVF)
3. Process Vessel Vent Blowers
4. Heater/HEPA Filter Assembly, Off-Gas Exhauster
5. Steam Atomized Scrubber (SAS), Off-Gas Condenser, High Efficiency Mist Eliminator (HEME)
6. Off-Gas Condensate Tank (OGCT)
7. Melter Feed Tank (MFT)
8. Recycle Collection Tank (RCT)
9. Sludge Receipt & Adjustment Tank (SRAT)
10. SME Condensate Tank (SMECT)
11. Slurry Mix Evaporator (SME)
12. Strip Effluent Feed Tank (SEFT)
13. Precipitate Reactor Feed Tank (PRFT)
14. Organic Evaporator Condensate Tank (OECT)
15. Organic Evaporator (OE)
16. Precipitate Reactor (PR)

Savannah River Remediation

AECOM | BECHTEL | CH2M HILL | B&W | AREVA

Sludge Batch Compositions – Qualification Sample Compared to WAPS Sample

We do the right thing.

	Shielded Cells	WAPS	Shielded Cells	WAPS	Shielded Cells	WAPS	Shielded Cells	WAPS	Shielded Cells	WAPS	Shielded Cells	WAPS	Shielded Cells	WAPS	Shielded Cells	WAPS	Shielded Cells	WAPS
	1B	1B	2	2	3	3	4	4	5	5	6	6	7a	7a	7b	7b	8	8
Al	8.04	7.66	5.77	5.44	5.12	5.14	9.64	9.52	8.91	9.02	11	10.6	10.6	10	8.80	9.18	5.5	6.98
Ca	2.41	2.18	2.34	2.3	1.28	1.61	1.516	1.41	1.31	1.38	0.527	0.868	0.56	0.72	0.64	0.699	1.12	0.968
Cr	0.14	0.13	0.157	0.118	0.0892	0.107	-	0.0767	0.046	0.055	0.044	0.042	0.043		0.04	0.0405	0.102	0.0729
Cu	0.03	0.03	-	0.0752	0.029	0.027	0.028	0.033	0.062	0.046	0.0711	0.059	0.039	0.12	0.08	0.043	0.05	0.0699
Fe	22.19	21.50	23.6	23.9	13.8	16.4	15.4	14.3	16.3	15	11.8	14	13.2	14	14.00	13.9	17.2	16.9
Mg	1.25	1.15	1.84	1.92	1.45	1.52	1.31	1.17	0.604	0.757	0.214	0.447	0.28	0.37	0.29	0.296	0.163	0.229
Mn	3.82	3.30	3.21	3.19	3.98	3.56	3.45	3.18	3.66	3.48	4.15	4.3	3.13	3.9	3.00	3.09	6.31	5.29
Na	6.94	5.78	7.8	6.8	14.1	13.1	10.8	11	15.2	12.2	15.4	13.2	14	13	14.00	14.4	16.9	14.5
Ni	0.38	0.34	1.19	1.88	0.929	0.983	0.989	0.894	2.34	1.87	1.69	1.83	2.3	2.4	2.90	2.69	0.81	1.64
P	0.90	0.66	0.636	0.542	0.5	0.44	0.298	0.297	0.21	0.16	0.143	0.076	0.064	-	0.10	0.115	0.239	0.14
Si	1.39	1.34	1.19	0.567	1.07	1.06	0.884	0.899	0.923	0.912	0.711	0.844	1.48	1.2	1.10	1.11	0.907	1.1
Th	-	-	-	-	-	-	-	-	-	-	2.98	2.23	0.92	1.5	1.00	1.08	0.614	0.816
Ti	0.02	0.02	-	0.0196	0.013	0.0164	0.017	0.0166	0.02	0.018	0.016	0.019	0.017	-	0.02	0.0181	0.013	0.014
U-238	2.62	1.92	7.61	8.12	5.71	6.77	5.75	5.29	5.33	5.02	2.46	3.68	5.3	4.7	4.80	4.78	2.63	3.74
Hg	1.26	0.86	0.195	0.166	0.0654	0.146	2.57	0.814	2.22	1.82	3.21	3.17	1.5	1.9	1.30	1.71	2	1.86
Wt % Solids	16.03	18.08	18.4	19.9	27.2	18.66	20.3	14.44	17.1	13.36	15.12	16.24	18.1	17.2	16.10	15.64	22.7	17.21
Density	1.13	1.10	1.12	1.14	1.22	1.15	1.16	1.084	1.14	1.09	1.13	1.12	1.15	1.14	1.12	1.12	1.16	1.16
NO_2^-	7240	6533	6190	5591	25300	17471	16200	12309	8660	7020	10000	9190	9,900	10088	10300	9140	17700	11300
NO_3^-	2653	2691	3830	2977	19600	10836	11300	7463	6220	3360	6840	5070	7900	5329	5570	5150	13600	6910
SO_4^-	714	665	882	849	3500	1790	1800	1173	586	790	1200	834	2100	1466	2222	1460	1270	1260
Cl^-	<20	12	115	7.4	<100	<27	<200	<52	225	<310	<100	46	<233	-	<185	<268	<270	<96
F^-	<30	39	614	58	187	182	<200	<52	<200	<310	<100	<29	<233	-	<185	<268	<270	<96
TIC	1378	558	372	897	1260	-	1670	897	1280	833	913	900	912	-	972	918	810	1180
Oxalate	-	-	-	-	2000	1253	-	<530	-	-	-	-	8200	3859	3090	2950	1600	1640
SRAT H2	0.0035	-	0.00076	-	0.017	-	0.007	-	0.495	-	0.55	-	0.24	-	0.012	-	0.028	-
SME H2	0.0029	-	0.003	-	0.044	-	0.0078	-	0.148	-	0.05	-	0.044	-	0.022	-	0.028	-
Frit Used	200	200	200	200/320	202		507	418/510	418	418	418	418	418	418	418	418	803	803
WL	26.3	-	28		35		30		34	34	35	36	36	36	36	36	36	36
Ag	0.036	-	0.0106	-	0.0115	0.0159	0.0109	0.0098	0.0135	0.0102	0.0138	0.0138	0.0132	0.018	0.011	0.0118	0.014	0.0123
Pd	0.0021	-	0.000885	-	0.00166	0.00146	0.00126	0.00124	0.00403	0.00252	0.00304	0.00289	0.00259	0.00261	0.0024	0.00254	0.00288	0.00317
Rh	0.0051	-	0.00777	-	0.00712	0.00729	0.00894	0.0084	0.025	0.0161	0.0187	0.0205	0.0188	0.0193	0.021	0.0207	0.00901	0.0151
Ru	0.021	-	0.0332	-	0.0362	0.0296	0.0365	0.0313	0.11	0.0733	0.0924	0.0937	0.0902	0.0942	0.1	0.102	0.0398	0.0693
Antifoam	Dow Corning 544	Dow Corning 544	IIT747	IIT747	IIT747	IIT747	IIT747	IIT747	IIT747	IIT747	IIT747	IIT747	IIT747		IIT747	IIT747	IIT747	IIT747
pH SRAT			5.8				-		8.27		10		-		-		7.9	-
pH SME			5.3				-		8.77		~10		8.58		-		8.1	-
PCCS Met	yes	yes	yes	yes	yes	yes	yes	yes	yes	yes	yes	yes	yes	yes	yes	yes	yes	-

Basic Data Report - Hg Chemistry Summary

We do the right thing.

General Assumptions in BDR[1] Cross Checked with DWPF System Design Descriptions:

Reactants:	Products:	Notes
Sludge Washing:		
HgO + NaOH	Na[HgO(OH)] (10 %)	
Salt Cell Chemistry (ITP Process)		
Na[HgO(OH)] + 2 HCOOH	HgO + NaCOOH + H20	If this form of Hg were present in the salt solution, it would undergo the reaction in the SRAT vessel.
Hg(C6H5)2 + 2 NH30HN03	Hg + N2 + 2 C6H6 + 2 H20 + 2 HN03 (90 %)	HAN REDOX reaction. This form of Hg is not expected in the current process due to the change to a solvent extraction process. Assumed what ever was unreacted vaporized.
HgO + HCOOH	Hg + H20 + C02	Assumed insoluble fraction present
Hg(C6H5)2 + HCOOH	Hg + C02 + 2 C6H6 (90%)	Assumed insoluble fraction present
Chemical Process Cell		
SRAT Soluble:		
Hg(N03)2 + HCOOH	Hg + 2 HN03 + CO2	
Na[HgO(OH)] + 2 HCOOH	HgO + NaCOOH + H20 + C02	
SRAT Insoluble:		
Hg(C6H5)2 + HCOOH	Hg + C02 + 2 C6H6	This form of Hg is not expected in the current process due to the change to a solvent extraction process.
HgO + HCOOH	Hg + H20 + C02	G-SYD-S-00054, Rev. 12 assumes this reaction yield is 100%
Endpoint 0.45 wt.% Hg		
Vitrification:		
2 HgO	2 Hg(v) + 02	
Hg	Hg (v)	
I2 + 2 Hg	Hg2I2 (99%)	
4 Hg + 4 HCl + 02	Hg2Cl2 + 2 H20 (90%)	
2 Hg2Cl2 + 4 HCl + 02	4 HgCl2 + 2 H20	

Basic Data Report - Hg Chemistry Summary

We do the right thing.

OGCT, Quencher, Ejector, and Scrubbers:		
$HgCl_2 + 2\ Na_2CO_3 + H_2O$	$HgO + 2\ NaCl + 2\ NaHCO_3$	BDR assumption was that NaOH was added to the OGCT to reduce corrosion and improve NOx scrubbing efficiency . CO_2 in the vapor is assumed to convert the NaOH to Na_2CO_3. Stoichiometry uses Na_2CO_3 as the reactant in the OGCT system. Caustic addition is calculated from reactive species in the cooled Off- Gas entering the Quencher plus a 20% excess to maintain ~pH> 7. Current process does not add NaOH to the OGCT. Thus, reaction chemistry is slightly different. G-SYD-S-00061, Rev.5 shows same chemical reactions. The SDD does not indicate that NaOH is being added on a regualr basis as in the BDR. The SDD does indicate that concentrated HNO_3 or NaOH can be used to dissolve the solids that build up in the OGCT.
$Hg_2Cl_2 + 2\ Na_2CO_3 + H_2O$	$Hg + HgO + 2\ NaCl + 2\ NaHCO_3$	See note above
$Hg_2I_2 + 2\ Na_2CO_3 + H_2O$	$Hg + HgO + 2\ NaI + 2\ NaHCO_3$	See note above
DWTT:		
$Hg(NO_3)_2 + 2\ NaOH$	$HgO + 2\ NaNO_3 + H_2O$	
DWPF Recycle during Interim Storage:		
$Hg + NaNO_3$	$HgO + NaNO_2$ (a)	From the BDR: Mercury slowly oxidizes in caustic. Oxidation will actually occur during storage; elemental mercury in the Recycle Collection Tank of the DWPF is assumed to be adsorbed on solids and transferred to Interim Waste Storage. G-SYD-S-00058, Rev. 2 does not address the reaction chemistry or the 2 admendments.
$HgCl_2 + 2\ NaOH$	$HgO + 2\ NaCl + H_2O$	
$Hg_2Cl_2 + 2\ NaOH$	$Hg + HgO + 2\ NaCl + H_2O$	
$Hg_2I_2 + 2\ NaOH$	$Hg + HgO + 2\ NaI + H_2O$	
Mercury Purification:		
$Hg + 4HNO_3$	$Hg(NO_3)_2 + 2H_2O + 2NO_2$	2 gallon of 12 wt% HNO_3 per gallon of Hg. Air sparge - 99 ft^3 per gallon of Hg. Entrained contaminants are assumed to be perfectly distributed through the acid wash solution. 0.1 gallon of the acid wash accompanies each gallon of Hg transferred. The remainder of the wash is transferred to the spent wash tank. Mercury solubility in acid wash 7.0E-03 Wt.%. Bases is 2 hr of air sparge per batch of mercury, air sparge rate of 4 scfm and mercury batch size of 5 gallons.