Liquid Waste Program
Prime Contractor

Overview of the Savannah River Liquid Waste Mercury Challenge

Presenters: Pat Suggs DOE-SR
Richard Edwards, AECOM / SRR

September 1, 2015

SRR-CES-2015-00018

Background

- Mercury has long been a consideration in the Savannah River Liquid Waste System, both from a hazard and a chemical processing perspective
- There have been no personnel exposures, no environmental releases, and waste treatment systems comply with requirements
- However, there have been several recent examples of new information related to mercury in the Liquid Waste System
  - January 7, 2015 - Larger than expected amount of mercury collected from the 3H evaporator
  - February 3, 2015 – DOE requested SRR to conduct an evaluation of mercury through the entire Liquid Waste System
  - February 10, 2015 – 4th quarter 2014 TCLP (Toxic Characteristic Leaching Procedure) result for Saltstone grout (sample taken October 2, 2014) above the LDR (Land Disposal Restriction) control limit of 0.025 mg/L but below the toxic waste limit of 0.2 mg/L
  - April 1, 2015 – Special analysis of a sample from Tank 50 (feed to Saltstone) showed higher than expected amounts of mercury in the form of methyl mercury ion (~50 ppm vs. ~1 ppm); Resulted in declaration of PISA at Saltstone and operational restrictions

Mercury in Liquid Waste

- Originated from decades of canyon processing (used to aid reactor fuel dissolution)
- Is present throughout the liquid waste system (~60 metric tons)
- Is not a new issue
  - Removed at evaporators
  - Designed to be stripped and removed at DWPF
  - Removed at Effluent Treatment Plant
  - Will need to remove about one 55-gal drum of mercury from the Liquid Waste System every year for the remaining life of the program

Mercury in Liquid Waste *(continued)*

- But the issue is changing
  - Higher mercury concentrations in H-area waste is being processed in DWPF (H-area Tank Farm contains ~96% of the mercury)
  - SRR evaluations identified that a significant amount of mercury (40-80%) is being recycled to the tank farms from DWPF
  - Chemical forms of mercury are changing (increases in soluble mercury and methylated mercury)
    - *Prior to 2000, Mercury was believed to HgO (insoluble) or Hg+2 (soluble) with soluble Hg+2 limited to ~100 mg/l*
    - *Early 2000's, low concentrations of methyl mercury and dimethyl mercury around evaporators (ppb's)*
    - *Currently, experiencing higher total soluble mercury and higher methyl mercury concentrations (ppm's)*
- Poses several challenges to waste processing
  - Equipment impacts
  - Potential flammability of certain chemical forms
  - Saltstone grout performance (relative to mercury leaching)
  - Performance Assessment (relative to mercury leaching)
  - DWPF Mercury Removal and Recovery Process

Mercury in the Liquid Waste System

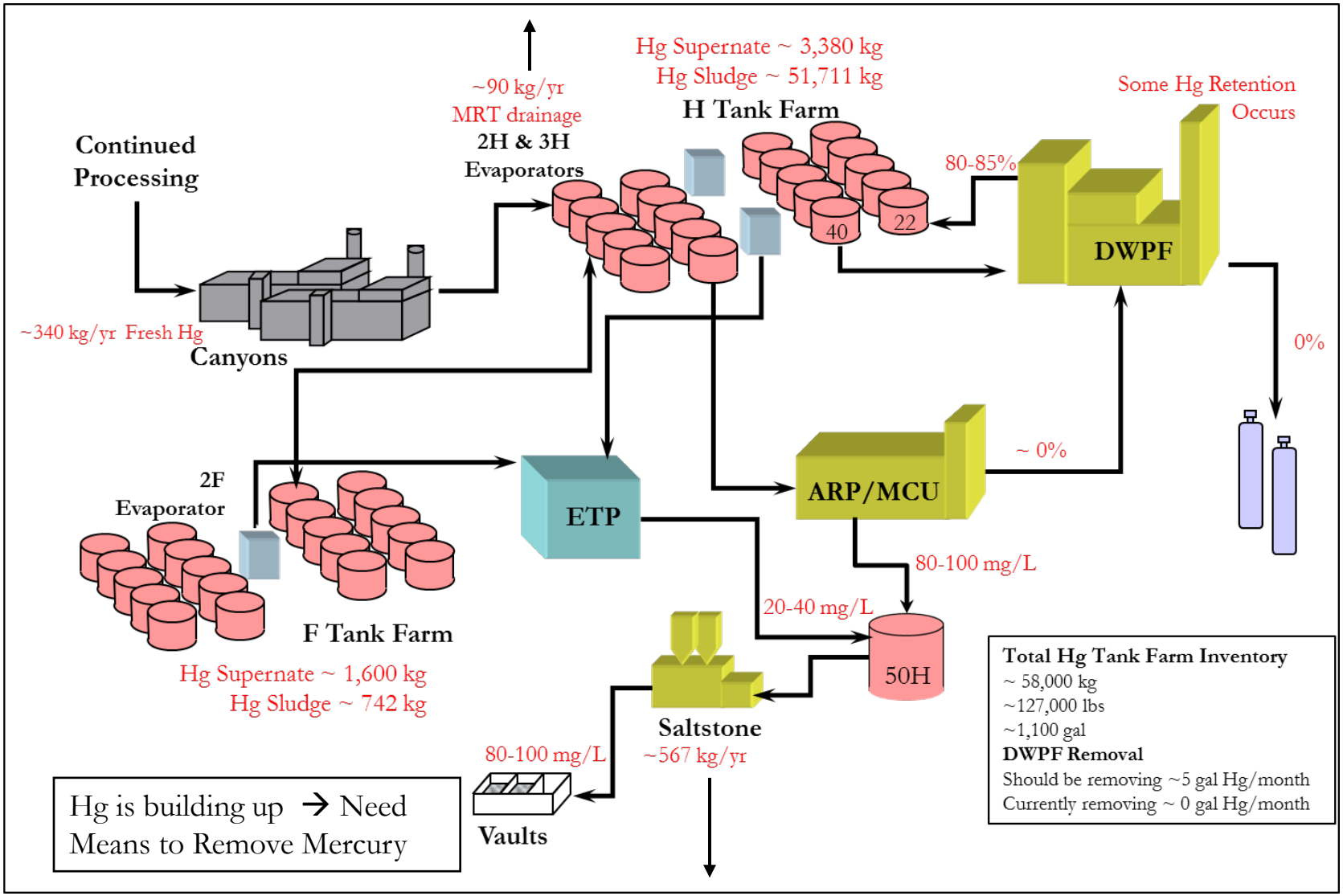

DWPF Mercury

- Early Hg removal system operations successful
- Since 2008 timeframe, not functioning per design

Mercury Program Team

- An integrated, system-wide evaluation of mercury behavior in the Liquid Waste System to identify
  - The inventory and chemical form of mercury throughout the Liquid Waste System
  - The chemical processing behavior and accumulation of mercury in the liquid waste facilities
  - The impacts of mercury, including worker safety and equipment degradation
  - Mercury removal and disposal alternatives
- Overall Goal: Develop long-term action plan to address overall mercury management and removal
- Two Phase Assessment Approach:
  - Phase 1: Review Liquid Waste inventory and chemical processing behavior using a system by system review methodology
    - *Assess Current Knowledge*
    - *Identify Gaps & Info Needs*
    - *Identify and Execute Selected Near Term Action Recommendations*
  - Phase 2: Integrated Assessment
    - *Re-Assess Overall System Knowledge*
    - *Identify Critical Gaps & Info Needs – Rank and Prioritize Gaps / Actions*
    - *Assess Impacts and Removal / Disposal Options*
    - *Document Action Plan Needed to Resolve Overall Mercury Management and Removal*

Mercury Program Team

- Established Mercury Expert Advisory Panel
  - Panel Members:
    - *Dr. Lou Papouchado, Retired SRS/SRNL Chemistry Expertise*
    - *Dr. Eric Pierce, ORNL Mercury Expert*
    - *Mandi Richardson, AECOM Mercury Consultant*
    - *Dr. Eric Prestbo, Tekran Corp. Chief Scientist, Mercury Behavior & Speciation Expert*

- Established AECOM Issue Coordination Team to integrate mercury related efforts between SRS and Oak Ridge (UCOR)
  - Lead: SRR – Richard Edwards
  - Lead: UCOR – Harold Connor

Mercury Program Team - Status

- Mercury in the LW facilities – Operational Restrictions (Saltstone) Resolved
  - Tank Farm Mercury accumulation PISA –measures in place to prevent excess accumulation
  - Saltstone TCLP - SCDHEC Agreed that the Saltstone Mercury Limit = Toxicity Limit for Mercury (~10x higher limit)
  - Methyl mercury PISA – Saltstone WAC changes to limit maximum organic mercury concentrations

- Mercury Assessment for Liquid Waste
  - Phase 1 Evaluations Completed (Phase 1 Report Issued July 1, 2015)
    - *Significant Effort to Determine Mercury Speciation throughout the Liquid Waste System*
      - Significant mercury buildup around 2H (recycle) evaporator (~ 500 mg/l & ~40% is methylmercury)
    - *In-depth DWPF Chemical Process Cell (CPC) sampling effort performed*
      - Confirmed significant mercury returning to tank farm in DWPF recycle (> 40%)
  - Phase 2 Initiated
    - *Includes two System Engineering Evaluations (SEE) recommended from Phase 1:*
      - Re-Establish Mercury Removal Capability within DWPF (complete)
      - Determine Best Alternative Mercury Removal Location within Liquid Waste System (underway)
    - *DWPF operations needed to complete sampling*

Key Challenges

- Primary Liquid Waste Mercury Removal System is DWPF
  - Chemistry shift occurred in mid-2008 timeframe
  - Multiple Mercury Purification System pluggage events / recovery attempts due to “Dirty Hg” (2009-2010)
  - Comprehensive parametric SRNL simulant testing performed (2011-2012)
    - *Did not identify specific cause, multiple causes plausible*
    - *This is a key technology challenge and potential risk*
  - Multiple Independent Consultant Reviews (2013)
  - Mercury Sampling and Characterization (2013/14)

Elemental Mercury

Sample from Primary Process Mercury Collection Location

Photographs of SMECT (A), SRAT (B), and MWWT (C) Samples

Key Challenges

- Primary Liquid Waste Mercury Removal System is DWPF (continued)
  - SEE Team recommendation: Re-establish designed Hg removal capability in DWPF (w/potential enhancements)
    - *Shift collection location to SMECT (condensate vessel with clean mercury)*
    - *Increase pH to maximum allowed within current technical baseline*
    - *Set of prioritized contingency actions to augment primary recommendation*
      - Many involve technology development

- Alternate Liquid Waste Mercury Removal System may be necessary
  - Potential Alternatives under development
  - All will involve varying levels of technology development, deployment, and maturation

Key Challenges

- Significant Organic Mercury formation and buildup in 2H (DWPF Recycle) evaporator concentrates
  - Exact mechanism for formation not established
  - Likely Contributing factors:
    - *Current High levels of Soluble Mercury in DWPF Recycle*
    - *Methyl groups present from degradation of antifoams (used for DWPF processing; present in the waste from prior usage)*
  - Numerous technology challenges, including:
    - *No in-house analytical capability for organic mercury species (radioactive)*
    - *Means to prevent organic mercury formation is unknown*
    - *Current methyl mercury concentration is high / maximum possible concentration is unknown*
    - *Impacts to salt processing chemical separations is being assessed; it appears negligible, but remains a risk*
    - *Saltstone waste form preferentially releases organic mercury species*

Summary

- Mercury is pervasive throughout the Liquid Waste System
- Represents both a current and a long term challenge to liquid waste processing
- Long term action plan under development
- Key technology challenges must be addressed to ensure success
  - Site Infrastructure Analytical Capability Needs
  - Baseline Technical Information Needs
  - Technology Development Needs
  - Technology Maturation Needs