DAC – Title / Approval Form

PROJECT / TITLE		CALC. NO.
Anchorage for Quonset Hut near C-742-B		DAC-CCA-FA1200-0001
LOCATION SITE FPDP	BUILDING(S) OR AREA C-742-B area	ESO FA1200

APPLIES TO PROJECT – ITEMS / SYSTEMS:
N/A

AND REPORTS / DWGS. / REV. NO.: N/A

SIGNATURE / DATE

	REV. 0	REV. _____	REV. _____	REV. _____
Prepared by:	9/4/15 Todd Walker			
Reviewed by:	9/4/15 William Turner			
Approved by:	9/4/15 Terry Fletcher			

REV	AFFECTED PAGES

TABLE OF CONTENT

1.0 Introduction and Objectives.....3

2.0 Schematics.....3

3.0 Basis for Design.....3

3.1 Design Input.....3

3.2 References.....3

3.3 Assumptions.....3

4.0 Methodolgy.....3

5.0 Analysis/Calculations.....3

6.0 Conclusions/ Recommendations.....4

Attachment A – Anchorage Calculation for Quonset Hut at C-742-B Pages A1-A3

1.0 Introduction and Objectives

The purpose of these calculations is to document design for anchorage of a quonset hut near C-742-B for temporary storage of ClF_3 cylinders.

2.0 Schematics

See Attachment A

3.0 Basis for Design

3.1 Design Input

3.1.1 Units

pounds force = lbf

kip = 1000 lbf

3.2 References

3.2.1 AISC, Manual of Steel Construction – Allowable Stress Design, 9th Ed

3.2.2 ASCE 7-10, Minimum Design Loads for Buildings and Other Structures

3.2.3 Kentucky Building Code, Second Edition, 2013

3.2.4 International Building Code (IBC), 2015

3.2.5 CP3-EN-0220, Temproary/Relocatable Structure Control

3.3 Assumptions

None

4.0 Methodology

The Quonset Hut is being used as a temporary shelter. This calculation evaluates the wind loading to determine reactions so appropriate tie-down can be accomplished. The wind loading is taken from applicable codes. Based on the geometry of the structure, the reactions are determined and the proposed anchoring evaluated. Approval for use of the building as a temporary structure will be performed according to CP3-EN-0220, Temproary/Relocatable Structure Control.

5.0 Analysis/Calculations

See Attachment A

6.0 Conclusion and Recommendations

Based on the calculations in Attachment A, the anchorage provided for the Quonset Hut is acceptable for the determined wind loading.

GENERAL DESIGN AND COMPUTATION SHEET

Attachment A

JOB DAC-CCA-FA1200-0001	DATE	SHEET 5 of 7
ESO NO	COMPUTED	CHECKED BY

Check tie-down of quonset hut near C-742-B. Hut is 11'x11'x7'6" tall round-shaped building made of steel channel frame and sheet metal and is being used as a temporary shelter for ClF_3 cylinder storage. Tie down structure using synthetic straps tied to concrete sully stones:

Weight of sully stone:

$2' \times 2' \times 6' \times \frac{150\#}{ft^3} = 3{,}600\#$

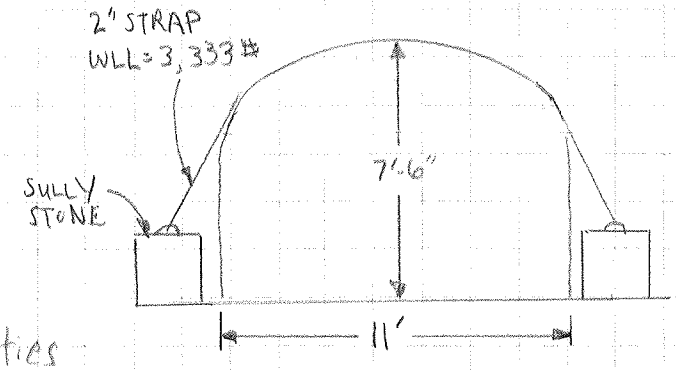

Est. wt of structure:

12 ga stl. plate: $4.38 \frac{\#}{sf} \times 240\ sf$
(area of PL conservative-used circle properties for 11' dia circle)

$4.38 \frac{\#}{sf} \times 240\ sf = 1{,}051\#$

Channel frame: 3" channel, $4.1 \#/ft \times 240\ ft = 984\#$

Total wt struct $= 1{,}051\# + 984\# = 2{,}035\#$

Wind loading

Cat I struct: 105 mph (2013 KBC, Table 1609.3)

$q_z = 0.00256 K_z K_{zt} K_d V^2$ (ASCE 7-10, Sect 27.3.2)

$K_d = 0.85$ (Table 26.6-1)

$K_{zt} = 1.0$ (Sect 26.8.2)

$K_z = .85$ (Table 27.3-1, Exposure C)

$V = 105$ mph

GENERAL DESIGN AND COMPUTATION SHEET

Attachment A

JOB	DATE	SHEET
DAC-CCA-FA1200-0001		6 of 7

ESO NO	COMPUTED	CHECKED BY

$q_z = 0.00256(0.85)(1.0)(0.85)(105)^2 = 20.4$ psf

Building is partially enclosed. Use Figure 27.4-1 in ASCE 7

$p = qGC_p - q_i\cancel{(GC_{pi})}^{\,0}$ internal pressure cancels. For windward:

$G = 0.85$ (sect 26.9.4)

$C_p = 0.8$

$p_w = 20.4(.85 \times .8) = 13.9$ psf

leeward: $\frac{l}{B} = \frac{11'}{11'} = 1.0$, $C_p = -.5$

$P_l = 20.4(.85 \times -.5) = -8.67$ psf

Roof pressure: Spring line of dome approaches 0, so use Fig 27.4-1

$\frac{h}{l} = \frac{7.5'}{11'} = .682$ Conservatively use highest C_p value: $C_p = -.9$

Roof pressure $= q_z(GC_p) - q_i(GC_{pi})$ — Partially enclosed, Table 26.11-1

$= 20.4(.85)(-.9) - 20.4(\pm .55)$

$= -26.8$ psf

Chord $= 2\sqrt{2(5')(7.5') - (5')^2} = 5.4'$

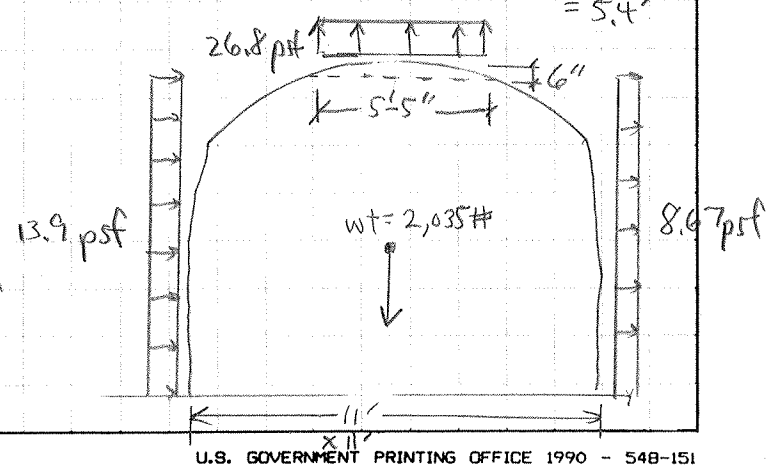

Note: Wind load diagram is for most conservative wind direction, as hut is open on one side in the other direction

GENERAL DESIGN AND COMPUTATION SHEET

Attachment A

JOB DAC-CCA-FA1200-0001	DATE	SHEET 7 of 7
ESO NO	COMPUTED	CHECKED BY

Check overturning due to wind:

Load comb: .6D + .6W + H (IBC Eq 16-15)

Total Horiz Load

$= (13.9 + 8.67)(7' \times 11') = 1{,}738\# \times .6 = 1{,}043\#$

Resisting Load (without straps)

$= 2{,}035\#(.6) - (5.4' \times 11')(26.8\ psf)(.6) = -371\#$

Check load on straps

$\cos 64° = \frac{1000\#}{P_S}$ $\quad P_S = 2{,}281\# < 3{,}333\#$

Strap ok

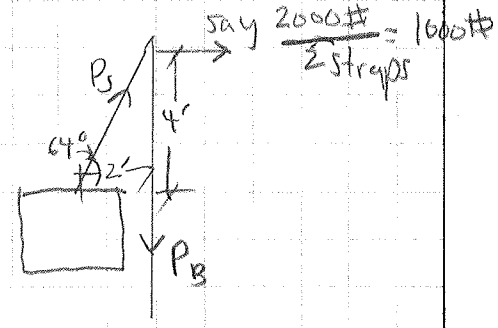

Sully Stone ok: $3600\# > 2{,}050\#$

Hold-down on bldg side: $\sin 64° = \frac{P_B}{2281\#}$ $\quad P_B = 2{,}050\#$ per strap

or $2 \times 2050\# = 4{,}100\#$ total

Resisting Load with straps:

$-371\# + 4{,}100\# = 3{,}729\#$ ∴ Hold down of building is acceptable.

Sully stone anchorage point (embed rebar) is a lifting point for the sully stone. By inspection, it is acceptable for tie-down.

U.S. GOVERNMENT PRINTING OFFICE 1990 - 548-151