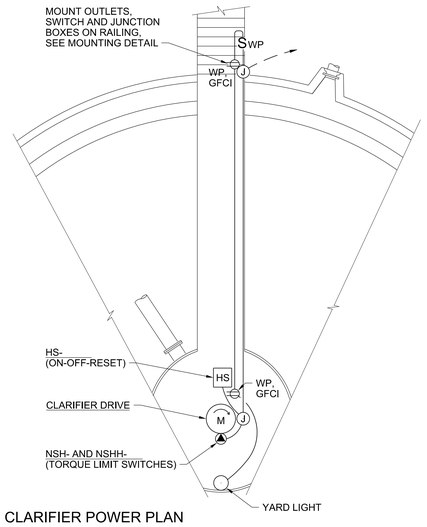

CLARIFIER POWER PLAN

NTS

2605-800

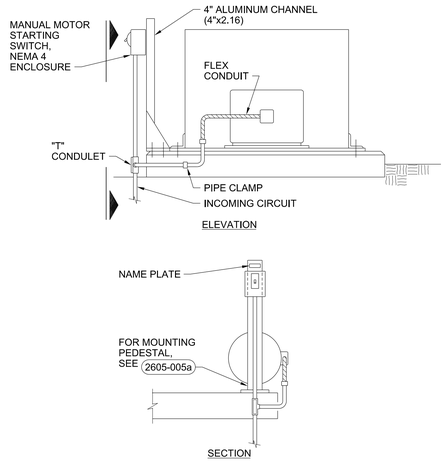

NOTES:
1. ALL HARDWARE SHALL BE STAINLESS STEEL.

SAMPLE PUMP

NTS

2605-801

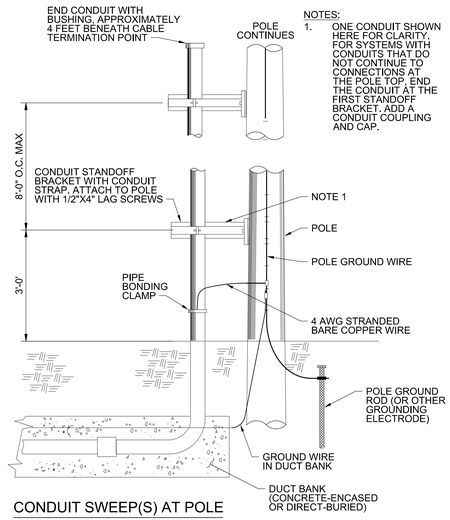

NOTES:
1. ONE CONDUIT SHOWN HERE FOR CLARITY. FOR SYSTEMS WITH CONDUITS THAT DO NOT CONTINUE TO CONNECTIONS AT THE POLE TOP, END THE CONDUIT AT THE FIRST STANDOFF BRACKET. ADD A CONDUIT COUPLING AND CAP.

CONDUIT SWEEP(S) AT POLE

NTS

2605-999

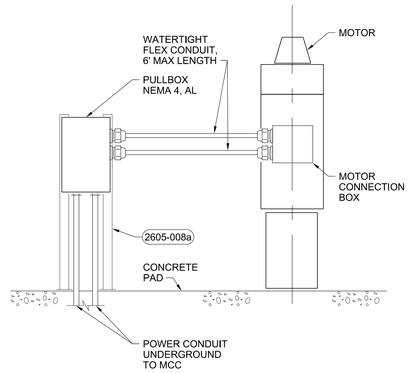

LARGE MOTOR CONNECTION

NTS

2620-001

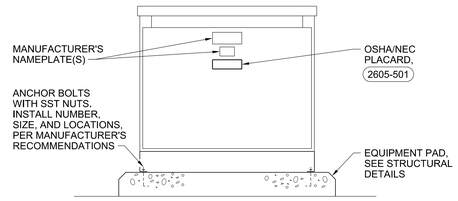

TRANSFORMER MOUNTING

NTS

2622-006

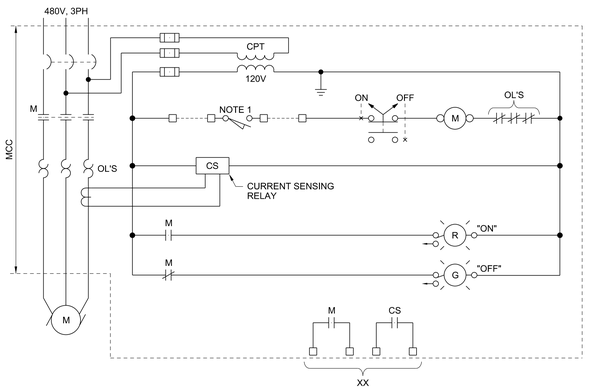

NOTES:
1. LIMIT SWITCH AT DAMPER. CLOSED WHEN DAMPER IS FULLY OPEN.

EXHAUST FAN WITH LOAD RELAY

NTS

2624-143

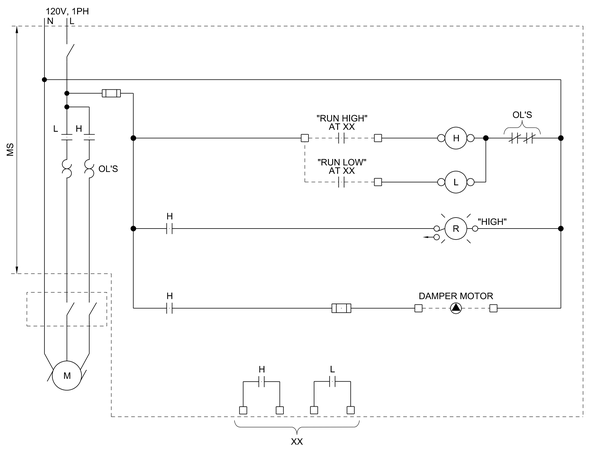

120 VOLT TWO SPEED CONTROL

NTS

2624-145

OF200 Mercury Treatment Facility

UCOR URS | CH2M Oak Ridge LLC

Designed by URS|CH2M Oak Ridge LLC (UCOR) for the Department of Energy
Oak Ridge Office of Environmental Management
under U. S. Government contract DE-SC-0004645

Y-12 National Security Complex managed and operated by Consolidated Nuclear Security, LLC for the Department of Energy under U.S. Government contract DE-NA0001942 • Oak Ridge, Tennessee •

DRW	R MARKEN	06/16/17
CHKR	B WILKINSON	06/16/17
DE	J LANDMAN	06/16/17
DVR		
DM	L ELLIS	06/16/17
PE	Teresa J. Pierce, P.E.	

RPE: JAMES KEITH LANDMAN, REGISTERED ENGINEER, STATE OF TENNESSEE, No. 119031

PROJECT NAME:
OF200 MERCURY TREATMENT FACILITY
ELECTRICAL
STANDARD DETAILS - SHEET 8 OF 10

USE	DISC	DT	DC	CM	SYSTEM	STAT	SIZE	BLDG	FL	CLASS
3	E	Y	K	NC	FAC	AR	E	9410-02	X	U

SH.	OF	TYPE		PART	REV
8	10	DD	E941002-F-0076	000	0

PART	REV	DESCRIPTION	DRW	CHKR	DE	DVR	DM	DATE	PE	DATE
	0	ISSUED FOR CONSTRUCTION	RM	BW	JL		LE	06/2017		

REVISION OR ISSUE PURPOSE — REVISION APPROVALS — SQUAD CHECK: WE AR CV ST HV EM FP PD EE IE M NP — DRAWING APPROVALS — DATE

ISSUED FOR CONSTRUCTION

THIS DRAWING IS LOANED FOR SOLE USE OF THE INTENDED RECIPIENT AND ONLY FOR THE LIMITED PURPOSES FOR WHICH IT WAS PROVIDED. USE BY OTHER ENTITIES OR FOR OTHER PURPOSES IS PROHIBITED AND AT THE USER'S OWN RISK. DRAWINGS ARE TO BE RETURNED UPON REQUEST OF THE FORWARDING RECIPIENT.

2017\06\16 1:44:48 PM
E941002-F-0076.dgn

662886