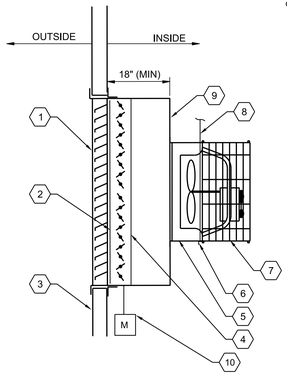

KEY NOTES:

1. LOUVER.
2. BIRDSCREEN.
3. WALL.
4. MOTORIZED DAMPER AS CALLED OUT ON THE DRAWING EQUIPMENT SCHEDULE.
5. FAN UNIT.
6. 1 1/2 "x1 1/2 "x1/4 " ANGLE.
7. MOTOR GUARD.
8. SUPPORT FROM STRUCTURE AS REQUIRED.
9. INSULATED SHEET METAL PLENUM FULL SIZE OF LOUVER.
10. DAMPER ACTUATOR.

1 WALL FAN MOUNTING
NTS

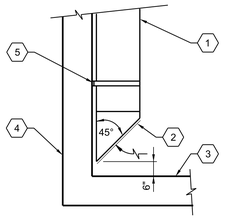

KEY NOTES:

1. SEE PLAN FOR SIZE OF DUCT.
2. 1/2" GRID SST SCREEN.
3. FINISHED FLOOR.
4. WALL.
5. DUCT SUPPORT PER SMACNA "HVAC DUCT CONSTRUCTION STANDARDS".

2 FLOOR EXHAUST
NTS

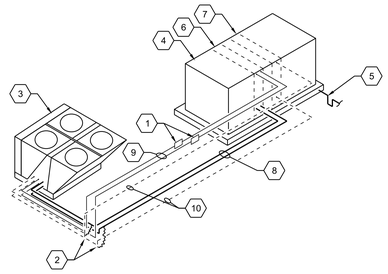

KEY NOTES:

1. RECEIVER TANK. FACTORY SUPPLIED, FIELD INSTALLED. (RECEIEVER TANK SHALL BE INTERNAL TO CONDENSING UNIT IF UNIT IS GREATER THAN 7 TON)
2. OIL RETURN
3. AIR COOLED CONDENSING UNITS
4. AIR HANDLING UNIT
5. CONDENSATE DRAIN PIPE
6. INDOOR COOLING / HEATING COIL
7. HOT GAS REHEAT COIL
8. SUCTION / DISCHARGE LINE
9. LIQUID LINE
10. HOT GAS REHEAT LINE (AS REQUIRED)

NOTES:

A. CONTRACTOR SHALL SUBMIT A REFRIGERANT PIPING DIAGRAM APPROVED BY THE CONDENSING UNIT MANUFACTURER BEFORE PROCEEDING WITH WORK.

B. REFRIGERANT PIPING SHALL BE SIZED PER MANUFACTURER OPTIMUM PERFORMANCE RATING.

C. UNITS SHALL INCLUDE THERMAL EXPANSION VALVE, SHUTOFF VALVES, CHECK VALVE, AND FILTER DRIER.

3 REFRIGERANT PIPING
NTS

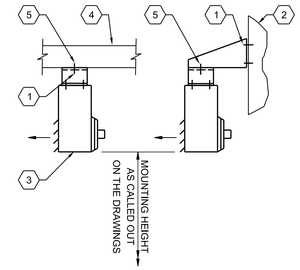

KEY NOTES:

1. FOR CONCRETE, USE 3/8" CONCRETE ANCHORS. FOR WOOD, USE BOLTS 2 1/2" SST LAG.
2. WALL.
3. UNIT HEATER.
4. CEILING OR ROOF.
5. MANUFACTURER'S MOUNTING BRACKETS, TYP.

NOTE
A. USE THREADED HANGER RODS ONLY WHERE MANUFACTURER'S MOUNTING BRACKETS ARE NOT PRACTICAL.

4 UNIT HEATER MOUNTING
NTS

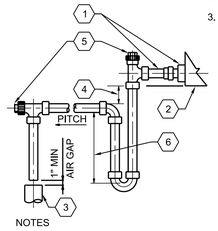

KEY NOTES:

1. DRAIN LINE SHALL BE AT LEAST THE SAME SIZE AS THE DRAIN PAN CONNECTION.
2. DRAIN PAN.
3. OPEN DRAIN.
4. 1" TO 4" FOR DRAW THRU UNITS ONLY.
5. AIR-TIGHT CLEAN OUT.
6. 6" FOR DRAW THRU AND 4" FOR BLOW THRU UNITS.

CONNECTED COOLING LOAD(TONS)	MIN* PIPE SIZE
2	3/4"
2.1-5	1"
5.1-50	1-1/2"
51-160	2"

* NOT SMALLER THAN OUTLET SIZE

NOTES

A. MANUALLY PRIME TRAP BEFORE START UP.
B. SUPPORT DRAIN LINES TO PREVENT SAG.
C. ALLOW SUFFICIENT SPACE BELOW PAN FOR TRAP AND PITCH TO DRAIN.

5 CONDENSATE DRAIN TRAP
NTS

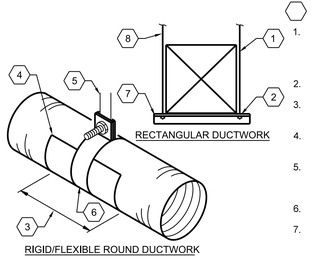

KEY NOTES:

1. ATTACH TO STRUCTURE WITH BEAM CLAMPS OR MASONRY EXPANSION BOLTS.
2. NUT WITH LOCK WASHER.
3. LENGTH EQUALS DIAMETER OF DUCT.
4. STAINLESS STEEL SHEET METAL SADDLE.
5. ATTACH TO STRUCTURE PER SMACNA RECOMMENDATIONS.
6. 1" MIN BAND CLAMP.
7. KINDORF HANGER WITH ALL THREAD ROD IN TRAPEZE CONFIGURATION.
8. ALL-THREAD ROD.

NOTES

A. DO NOT USE POWDER POWERED FASTENING SYSTEMS TO ATTACH SUPPORTS TO STRUCTURE.
B. SUPPORT SYSTEM MUST NOT DAMAGE DUCT, INSULATION, OR CAUSE DUCT SHAPE DEFORMATION.
C. HANGER SIZES SHALL BE IN ACCORDANCE WITH SMACNA, LATEST EDITION.

6 DUCTWORK SUPPORT
NTS

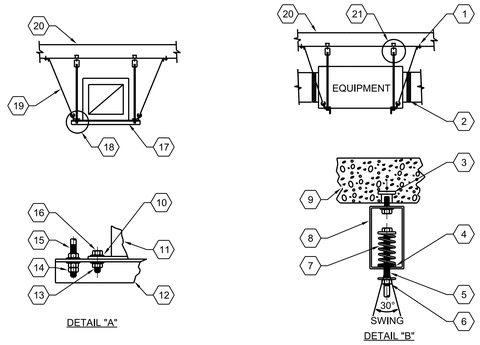

KEY NOTES:

1. ANCHOR BOLT.
2. FLEXIBLE CONNECTION, TYP.
3. INSERT.
4. NEOPRENE SPRING CUP.
5. 3/8" STEEL ROD.
6. PRECOMPRESSION PLATE NUT.
7. 1" DEFLECTION STEEL SPRING AND RUBBER IN SHEAR ISOLATOR.
8. SPRING HOUSING.
9. CONCRETE SLAB.
10. WASHER, TYP.
11. EQUIPMENT.

KEY NOTES:

12. SUPPORT ANGLE 1 1/2"x1 1/2"x1/4".
13' LOCKNUT.
14. NUT, TYP.
15. 3/8" STEEL ROD.
16. EQUIPMENT ANCHOR POINT 1/2" DIAMETER BOLT, MINIMUM 4 PLACES.
17. SUPPORT FRAME.
18. SEE DETAIL "A".
19. SLACK AIRCRAFT CABLE, TYP FOR 3.
20. STRUCTURE.
21. SEE DETAIL "B", TYP FOR 4.

7 SPRING ISOLATED EQUIPMENT MOUNTING
NTS

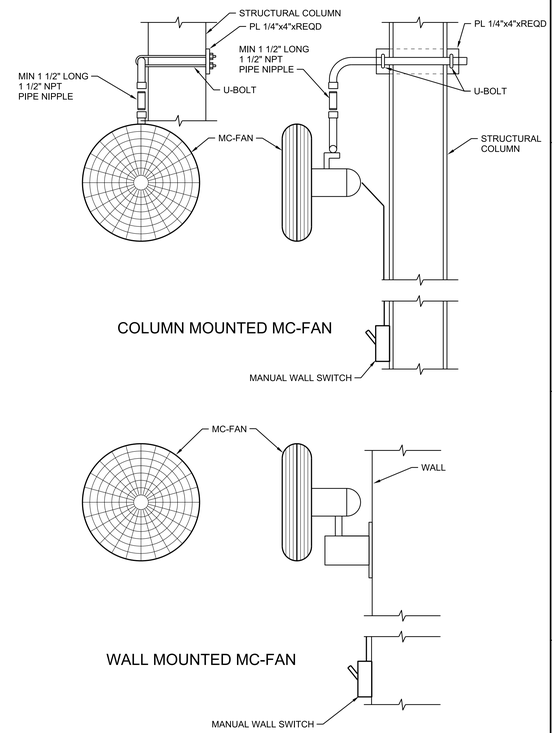

NOTE:
CONTRACTOR SHALL COORDINATE ADDITIONAL WALL FRAMING AS REQUIRED TO SUPPORT FAN.

11 MC-FAN DETAIL
NTS

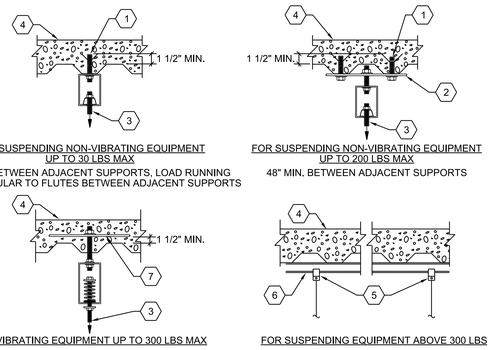

FOR SUSPENDING NON-VIBRATING EQUIPMENT UP TO 30 LBS MAX
12" MIN. BETWEEN ADJACENT SUPPORTS, LOAD RUNNING PERPENDICULAR TO FLUTES BETWEEN ADJACENT SUPPORTS

FOR SUSPENDING NON-VIBRATING EQUIPMENT UP TO 200 LBS MAX
48" MIN. BETWEEN ADJACENT SUPPORTS

FOR VIBRATING EQUIPMENT UP TO 300 LBS MAX

FOR SUSPENDING EQUIPMENT ABOVE 300 LBS

KEY NOTES:

1. 5/8" EXPANSION BOLT.
2. 5/8" PLATE 16"x3".
3. 1/4" DIA.
4. CONCRETE FILLED METAL DECK.
5. BEAM CLAMP (SEE SPEC FOR TYPE).
6. SUPPLEMENTARY STEEL.
7. 1/4" PLATE 16"x3".

8 SUPPORT FROM CONCRETE FILLED METAL DECK
NTS

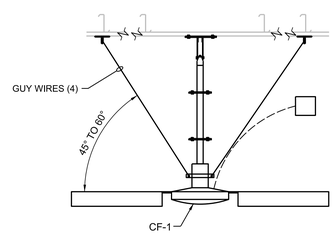

CONTROL SEQUENCE

1. CF-1 SHALL BE INTERLOCKED AND CONTROLLED BY A SINGLE MANUAL SPEED CONTROLLER.
2. NORMAL OPERATION SHALL BE DOWNFLOW AND SHALL RUN CONTINUOUS.

9 CEILING FAN CONTROL DIAGRAM
NTS

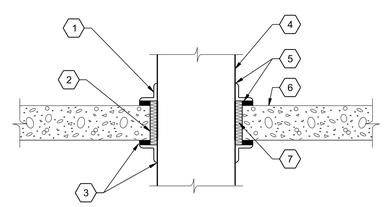

KEY NOTES:

1. 2" ANGLE CLOSURE COLLAR, MATERIAL TO BE OF SAME TYPE OF DUCT, TYP.
2. 1/2" MAXIMUM CLEARANCE.
3. SEALANT, ALL AROUND, TYPICAL BOTH SIDES OF STRUCTURE.
4. SHEET METAL DUCT.
5. SEALANT, ALL AROUND, TYPICAL BOTH SIDES OF STRUCTURE.
6. FLOOR OR WALL.
7. PACK OPENING AROUND DUCT WITH MINERAL FIREPROOFING AND SAFEING.

NOTES:

1. WALL PENETRATION SIMILAR.
2. 2" ANGLE CLOSURE COLLAR OF SAME MATERIAL AS DUCT.

10 FLOOR PENETRATION - DRY AREA
NTS

UCOR
URS | CH2M
Oak Ridge LLC

OF200 Mercury Treatment Facility
Designed by URS|CH2M Oak Ridge LLC (UCOR) for the Department of Energy
Oak Ridge Office of Environmental Management
under U. S. Government contract DE-SC-0004645

Y-12 National Security Complex managed and operated by Consolidated Nuclear Security, LLC for the Department of Energy under U.S. Government contract DE-NA0001942
« Oak Ridge, Tennessee »

DRW	J PIGMAN	06/16/17
CHKR	J McMURREN	06/16/17
DE	T PRICE	06/16/17
DVR		
DM	L ELLIS	06/16/17
PE	Teresa J. Pierce, P.E.	

RPE
THEODORE J. PRICE
STATE OF TENNESSEE
ISSUED FOR CONSTRUCTION
Digitally signed by Teresa J. Pierce
DN: cn=Teresa J. Pierce, P.E., o=UCOR, ou=Engineering, email=pierctj@ucor.com, c=US
Date: 2017.06.06 08:45:37 -04'00'

PROJECT NAME:
OF200 MERCURY TREATMENT FACILITY
HVAC
TREATMENT FACILITY
DETAILS

USE	DISC	DT	DC	CM	SYSTEM	STAT	SIZE	BLDG	FL	CLASS
3	H	A	D	NC	FAC	AR	E	9410-02	X	U

SH.	OF	TYPE		PART	REV
1	1	DD	H941002-F-0012	000	0

662886

PART	REV	DESCRIPTION	DRW	CHKR	DE	DVR	DM	DATE
	0	ISSUED FOR CONSTRUCTION	JP	JM	TP		LE	06/2017

REVISION OR ISSUE PURPOSE

PE	DATE

REVISION APPROVALS

WE	AR	CV	ST	HV	EM	FP	PD	EE	IE	M	NP

SQUAD CHECK

DRAWING APPROVALS

ISSUED FOR CONSTRUCTION

THIS DRAWING IS LOANED FOR SOLE USE OF THE INTENDED RECIPIENT AND ONLY FOR THE LIMITED PURPOSES FOR WHICH IT WAS PROVIDED. USE BY OTHER ENTITIES OR FOR OTHER PURPOSES IS PROHIBITED AND AT THE USER'S OWN RISK. DRAWINGS ARE TO BE RETURNED UPON REQUEST OF THE FORWARDING RECIPIENT.

6/29/2017 8:58:54 PM
H941002-F-0012.dgn