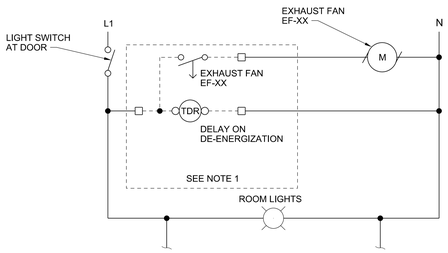

NOTES:
1. TIME DELAY RELAY IN NEMA 1 ENCLOSURE. ADJUSTABLE FROM 1 TO 10 MINUTES, SET AT 5 MINUTES.

RESTROOM LIGHT/EXHAUST FAN CONTROL
NTS

2624-146

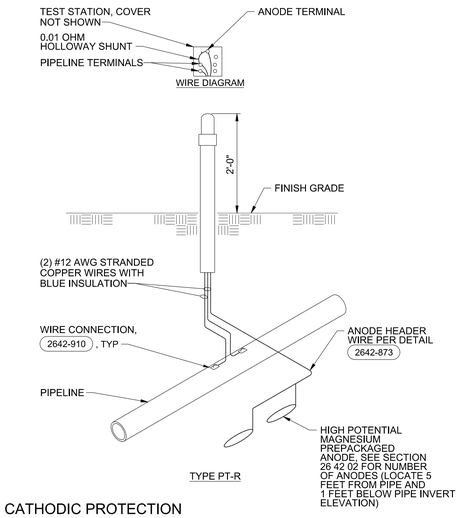

CATHODIC PROTECTION
POST MOUNTED TEST STATION
NTS

2642-801

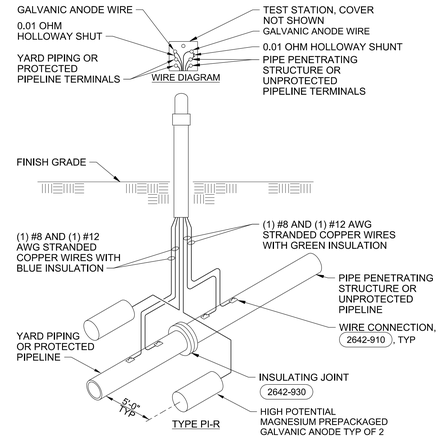

NOTES:
1. INSTALL GALVANIC ANODE 1'-0" BELOW PIPE IN INVERT ELEVATION

CATHODIC PROTECTION
POST MOUNTED TEST STATION WITH INSULATING JOINT
NTS

2642-805

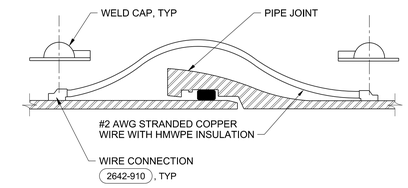

PUSH-ON JOINT BOND
NTS

2642-840

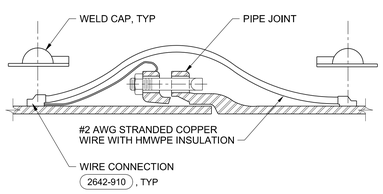

NOTES:
1. PIGTAIL SHALL BE BONDED TO RESTRAINING MECHANISMS

MECHANICAL JOINT BOND
NTS

2642-846

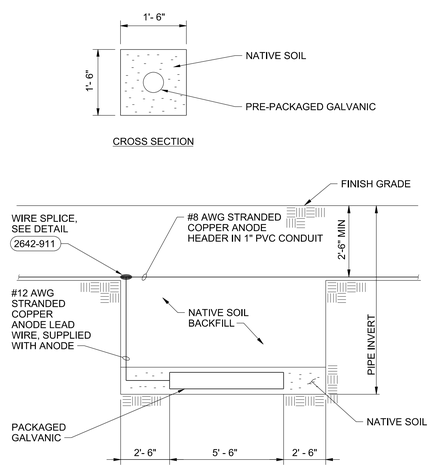

CATHODIC PROTECTION
HORIZONTAL ANODE INSTALLATION
NTS

2642-873

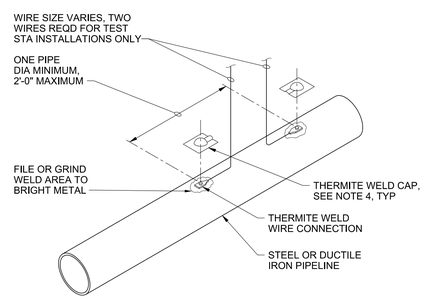

NOTES:
1. COPPER SLEEVE REQUIRED FOR THERMITE WELDING OF #10 AWG AND SMALLER WIRE.
2. USE COPPER SLEEVE ON #2 AWG JOINT BONDING WIRES.
3. WELDER AND CARTRIDGE SIZE VARIES ACCORDING TO WIRE SIZE AND PIPE MATERIAL, CONSULT WELDER MANUFACTURER FOR RECOMMENDED WELDER AND CARTRIDGE.
4. COAT WELD AREA AND FILL RECESS ON THERMITE WELD CAP WITH COLD APPLIED COAL TAR MASTIC OR APPROVED EQUAL AND APPLY CAP TO WELD.

CATHODIC PROTECTION
WIRE CONNECTION FOR STEEL AND DUCTILE IRON PIPE
NTS

2642-910

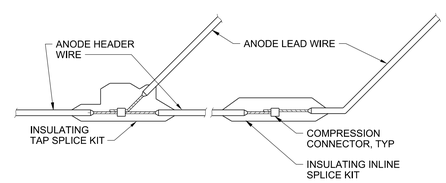

NOTES:
1. EPOXY SPLICE KITS SHALL BE CURED A MINIMUM OF 2 HOURS AND HEAT SHRINK SPLICE KITS COOLED A MINIMUM OF 1 HOUR BEFORE BURIAL OR SUBMERSION.

CATHODIC PROTECTION
WIRE SPLICE
NTS

2642-911

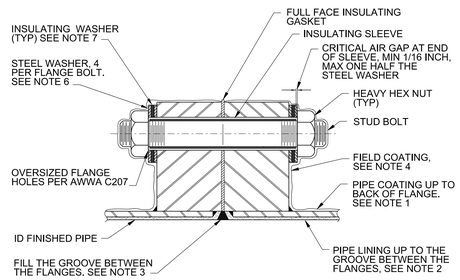

NOTES:
1. THE PIPE COATING ON EACH SIDE OF THE INSULATED FLANGE SHALL BE THE SAME IN TYPE, THICKNESS, AND QUALITY UP TO THE BACK SIDE OF THE RESPECTIVE FLANGE.
2. THE LINING ON THE PIPE SHALL BE THE SAME IN TYPE, THICKNESS, AND QUALITY UP TO THE INSULATED FLANGE JOINT.
3. FOR PIPE LARGER THAN 24 INCH DIAMETER , FILL THE INSULATED FLANGE'S INTERNAL GAP WITH A MATERIAL COMPATIBLE WITH THE PIPE LINING.
4. COAT JOINTS AS SPECIFIED AFTER INSTALLATION.
5. SEE 2642-932 FOR INSULATED BOLTS AT TAPPED VALVE FLANGES.
6. FOR PIPE SMALLER THAN 36 INCH DIAMETER DELETE INNER STEEL WASHERS.
7. FOR BURIED OR SUBMERGED INSULATING FLANGE, DO NOT INSTALL INSULATING WASHER ON PROTECTED SIDE OF FLANGE.

INSULATED FLANGES
NTS

2642-930

THIS DRAWING IS LOANED FOR SOLE USE OF THE INTENDED RECIPIENT AND ONLY FOR THE LIMITED PURPOSES FOR WHICH IT WAS PROVIDED. USE BY OTHER ENTITIES OR FOR OTHER PURPOSES IS PROHIBITED AND AT THE USER'S OWN RISK. DRAWINGS ARE TO BE RETURNED UPON REQUEST OF THE FORWARDING RECIPIENT.

PART	REV	DESCRIPTION	DRW	CHKR	DE	DVR	DM	DATE
	0	ISSUED FOR CONSTRUCTION	RM	BW	JL		LE	06/2017

REVISION OR ISSUE PURPOSE

PE	DATE

REVISION APPROVALS

WE	AR	CV	ST	HV	EM	FP	PD	EE	IE	M	NP

SQUAD CHECK

RPE: JAMES KEITH LANDMAN, REGISTERED ENGINEER, STATE OF TENNESSEE, No. 119028

DRW	R MARKEN	06/13/17
CHKR	B WILKINSON	06/13/17
DE	J LANDMAN	06/13/17
DVR		
DM	L ELLIS	06/16/17
PE	Teresa J. Pierce, P.E.	

REV. DATE — DRAWING APPROVALS — DATE

UCOR URS | CH2M Oak Ridge LLC

OF200 Mercury Treatment Facility
Designed by URS|CH2M Oak Ridge LLC (UCOR) for the Department of Energy
Oak Ridge Office of Environmental Management
under U. S. Government contract DE-SC-0004645

Y-12 National Security Complex managed and operated by Consolidated Nuclear Security, LLC for the Department of Energy under U.S. Government contract DE-NA0001942 • Oak Ridge, Tennessee •

PROJECT NAME:
OF200 MERCURY TREATMENT FACILITY
ELECTRICAL
STANDARD DETAILS - SHEET 9 OF 10

USE	DISC	DT	DC	CM	SYSTEM	STAT	SIZE	BLDG	FL	CLASS
3	E	Y	K	NC	FAC	AR	E	9410-02	X	U

SH.	OF	TYPE		PART	REV
9	10	DD	E941002-F-0077	000	0

662886

ISSUED FOR CONSTRUCTION

2017\06\16 1:45:27 PM
E941002-F-0077.dgn