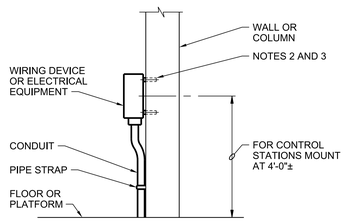

NOTES:

1. ALL MOUNTING HARDWARE SHALL BE STAINLESS STEEL. USE WASHER AND SPLIT-LOCK WASHERS UNDER ALL NUTS.
2. ON CONCRETE WALLS USE STAINLESS STEEL CONCRETE ANCHORS. MOUNT ENCLOSURE ON 1/2" SPACERS OF 1/2" SCHEDULE 80 PVC CONDUIT.
3. BOXES 6 INCHES SQUARE AND LESS SHALL BE SUPPORTED BY TWO ANCHORS. LARGER BOXES SHALL BE SUPPORTED BY AT LEAST FOUR.

DEVICE MOUNTING, WALL OR COLUMN

NTS

2605-002

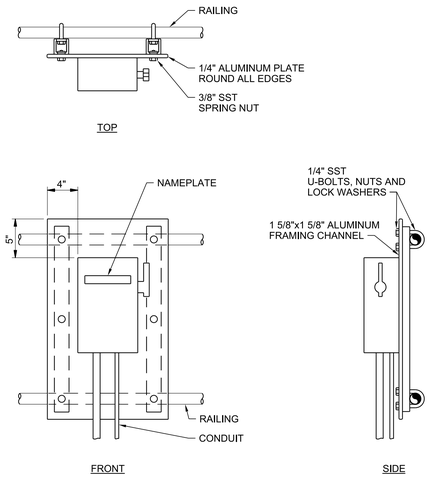

DEVICE MOUNTING, NONFUSED DISCONNECT SWITCH

NTS

2605-003b

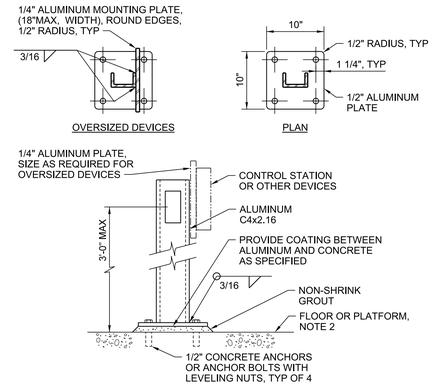

NOTES:

1. USE STAINLESS STEEL MOUNTING HARDWARE. USE WASHERS AND SPLIT-LOCK WASHERS UNDER ALL NUTS.
2. FOR YARD LOCATIONS, PROVIDE 2'-0" SQUARE x 6" THICK CONCRETE PAD AT GRADE WITH 3#4 REBAR EACH WAY, CENTERED.
3. CONTROL STATIONS DEVICES AND EQUIPMENT HAVING A FRONTAL AREA NOT GREATER THAN 2'-0" SQ FT SHALL BE PEDESTAL MOUNTED UNLESS OTHERWISE INDICATED.

DEVICE MOUNTING, MOTOR CONTROL STATION

NTS

2605-005b

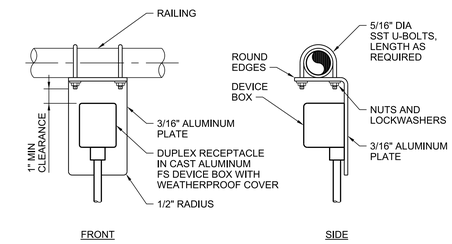

NOTES:

1. THIS DETAIL SHALL BE USED FOR MOUNTING OF ALL WIRING DEVICES AND JUNCTION BOXES 4 INCHES SQUARE AND LESS ON RAILING WHETHER DETAIL IS CALLED OUT OR NOT.
2. ALL HARDWARE TO BE STAINLESS STEEL. USE WASHER AND SPLIT LOCKWASHERS WITH ALL NUTS.
3. ALL EDGES AND THE ENDS OF ALL U-BOLTS WHICH HAVE BEEN CUT SHALL BE FILED SMOOTH.

DEVICE MOUNTING, ON RAILING

NTS

2605-006b

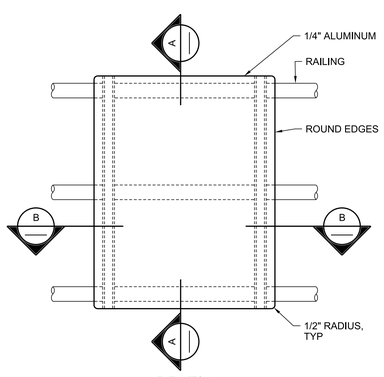

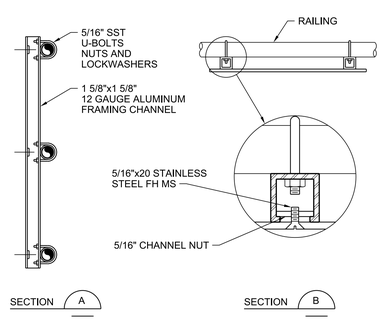

NOTES:

1. ALL HARDWARE SHALL BE STAINLESS STEEL. USE WASHERS AND SPLIT-LOCK WASHERS ON ALL NUTS AND BOLTS.
2. DIMENSIONS SHALL BE AS REQUIRED FOR EQUIPMENT TO BE MOUNTED. EDGE OF MOUNTING PLATE SHALL EXTEND A MINIMUM OF 2 INCHES EACH SIDE OF THE MOUNTED EQUIPMENT.
3. THIS DETAIL SHALL BE USED FOR MOUNTING EQUIPMENT AND JUNCTION BOXES WEIGHING LESS THAN 50 LBS ON RAILING WHETHER DETAIL IS CALLED OUT OR NOT. EQUIPMENT MOUNTING SHALL NOT REDUCE THE WIDTH OF A WALKWAY TO LESS THAN 3'-0".

DEVICE MOUNTING, RAILING MOUNTED EQUIPMENT SUPPORT

NTS

2605-007a

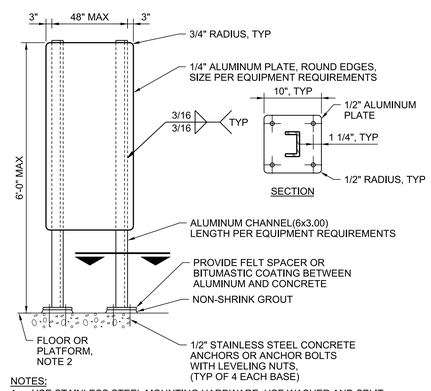

NOTES:

1. USE STAINLESS STEEL MOUNTING HARDWARE. USE WASHER AND SPLIT LOCK WASHER UNDER ALL NUTS.
2. FOR YARD LOCATIONS PROVIDE A 6 INCH THICK CONCRETE PAD AT GRADE WITH #4 BAR @ 12" OC EACH WAY, CENTERED. THE PAD SHALL BE 12 INCHES LONGER THAN THE MOUNTING PLATE BY ONE HALF THE HEIGHT OF THE MOUNTING PLATE ABOVE FINISHED GRADE. MINIMUM WIDTH 24 INCHES.

DEVICE MOUNTING, EQUIPMENT PEDESTAL

NTS

2605-008b

THIS DRAWING IS LOANED FOR SOLE USE OF THE INTENDED RECIPIENT AND ONLY FOR THE LIMITED PURPOSES FOR WHICH IT WAS PROVIDED. USE BY OTHER ENTITIES OR FOR OTHER PURPOSES IS PROHIBITED AND AT THE USER'S OWN RISK. DRAWINGS ARE TO BE RETURNED UPON REQUEST OF THE FORWARDING RECIPIENT.

PART	REV	DESCRIPTION	DRW	CHKR	DE	DVR	DM	DATE
	0	ISSUED FOR CONSTRUCTION	RM	BW	JL		LE	06/2017

REVISION OR ISSUE PURPOSE

REVISION APPROVALS: PE, DATE

SQUAD CHECK: WE, AR, CV, ST, HV, EM, FP, PD, EE, IE, M, NP

RPE: JAMES KEITH LANDMAN, REGISTERED ENGINEER, AGENCY No. 119038, STATE OF TENNESSEE

DRAWING APPROVALS		DATE
DRW	R MARKEN	06/16/17
CHKR	B WILKINSON	06/16/17
DE	J LANDMAN	06/16/17
DVR		
DM	L ELLIS	06/16/17
PE	Teresa J. Pierce, P.E.	

REV. DATE

UCOR URS | CH2M Oak Ridge LLC

OF200 Mercury Treatment Facility

Designed by URS|CH2M Oak Ridge LLC (UCOR) for the Department of Energy
Oak Ridge Office of Environmental Management
under U. S. Government contract DE-SC-0004645

Y-12 National Security Complex managed and operated by Consolidated Nuclear Security, LLC for the Department of Energy under U.S. Government contract DE-NA0001942 • Oak Ridge, Tennessee •

PROJECT NAME:
OF200 MERCURY TREATMENT FACILITY
ELECTRICAL
STANDARD DETAILS - SHEET 1 OF 10

USE	DISC	DT	DC	CM	SYSTEM	STAT	SIZE	BLDG	FL	CLASS
3	E	Y	K	NC	FAC	AR	E	9410-02	X	U

SH.	OF	TYPE		PART	REV
10	1	DD	E941002-F-0069	000	0

662886

ISSUED FOR CONSTRUCTION

6/22/2017 10:47:31 AM
E941002-F-0069.dgn