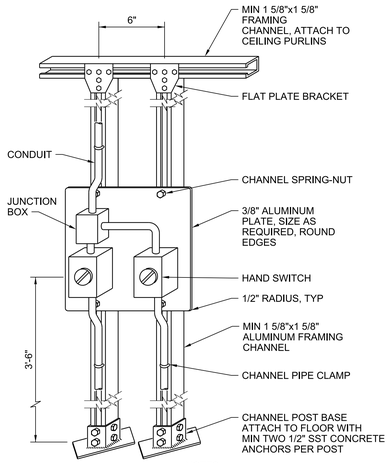

NOTES:
1. SIZE SUPPORT POST, CROSS CHANNELS, AND CONNECTIONS FOR VERTICAL AND LATERAL LOADS.

DEVICE MOUNTING, FROM FLOOR
NTS

2605-009b

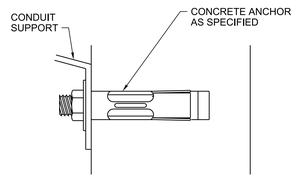

CONCRETE ANCHOR INSTALLATION
NTS

2605-010

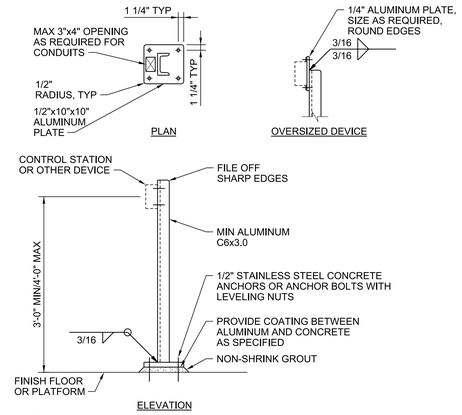

NOTES:
1. ALL MOUNTING HARDWARE SHALL BE STAINLESS STEEL. USE WASHERS AND SPLIT-LOCK WASHERS UNDER ALL NUTS AND BOLTS.

DEVICE MOUNTING, PEDESTAL
NTS

2605-011b

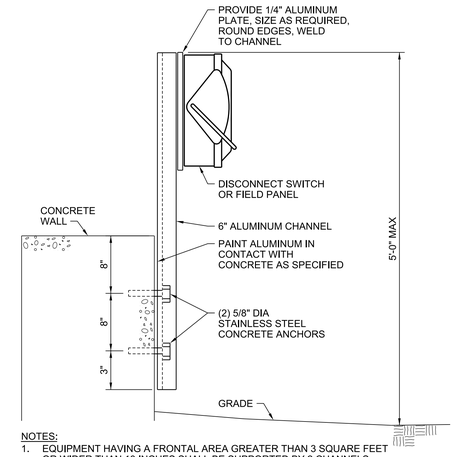

NOTES:
1. EQUIPMENT HAVING A FRONTAL AREA GREATER THAN 3 SQUARE FEET OR WIDER THAN 18 INCHES SHALL BE SUPPORTED BY 2 CHANNELS.
2. USE STAINLESS STEEL MOUNTING HARDWARE. USE WASHER AND SPLIT-LOCK WASHERS UNDER ALL NUTS AND BOLTS.

DEVICE MOUNTING, PEDESTAL
NTS

2605-012

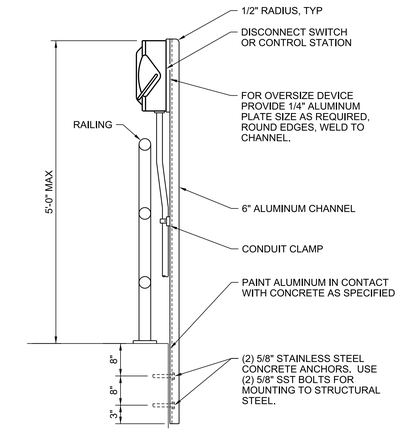

NOTES:
1. EQUIPMENT HAVING A FRONTAL AREA GREATER THAN 3 SQUARE FEET OR WIDER THEN 18 INCHES SHALL BE SUPPORTED BY TWO CHANNELS. USE STAINLESS STEEL MOUNTING HARDWARE. INSTALL RING AND SPLIT LOCK WASHERS UNDER ALL NUTS AND BOLTS.

DEVICE MOUNTING, AT RAILING
NTS

2605-013

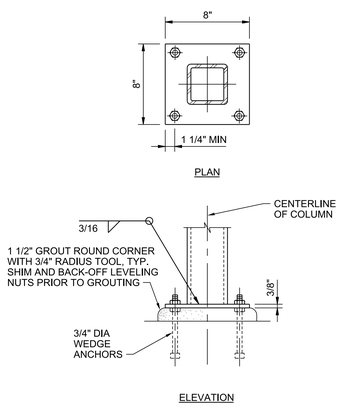

NOTES:
1. ANCHOR BOLTS SHALL BE 3/4" DIAMETER STAINLESS STEEL WEDGE ANCHORS WITH 4" EMBEDMENT IN EXISTING 6" CONCRETE FLOOR UNLESS OTHERWISE SHOWN.
2. GROUT SHALL BE NONSHRINK.

DEVICE MOUNTING, TUBE COLUMN BASE DETAIL
NTS

2605-014

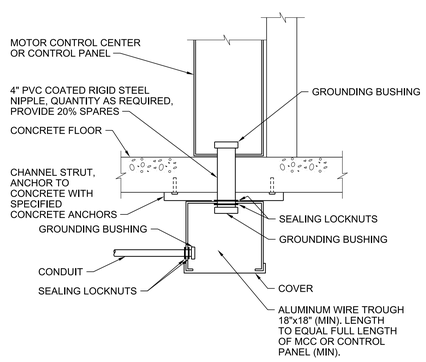

NOTES:
1. PAINT ALUMINUM IN CONTACT WITH CONCRETE AS SPECIFIED.

MCC OR CONTROL PANEL CONDUIT ENTRANCE, BOTTOM ENTRY
NTS

2605-015

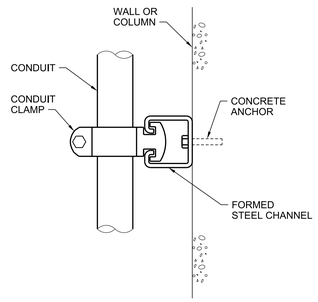

NOTES:
1. SUPPORT ALL EXPOSED CONDUITS ON FORMED STEEL CHANNELS.

CONDUIT SUPPORT ON STRUCTURE
NTS

2605-017

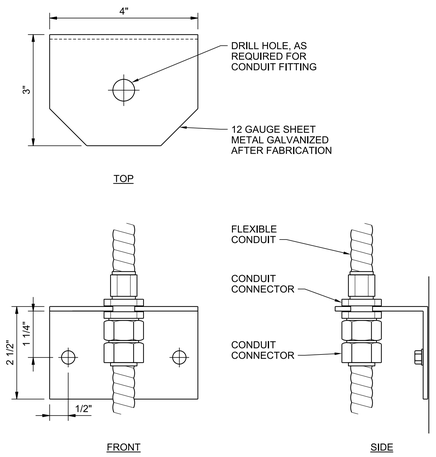

FLEXIBLE CONDUIT SUPPORT
NTS

2605-018

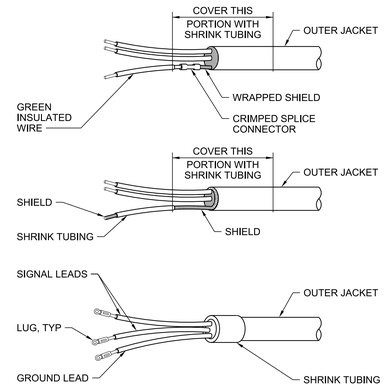

NOTES:
1. ALL SHIELDED INSTRUMENTATION CABLE SHALL BE TERMINATED IN ACCORDANCE WITH THIS DETAIL WHERE GROUNDING IS REQUIRED.

TERMINATION OF SHIELDED INSTRUMENTATION CABLE
NTS

2605-100b

THIS DRAWING IS LOANED FOR SOLE USE OF THE INTENDED RECIPIENT AND ONLY FOR THE LIMITED PURPOSES FOR WHICH IT WAS PROVIDED. USE BY OTHER ENTITIES OR FOR OTHER PURPOSES IS PROHIBITED AND AT THE USER'S OWN RISK. DRAWINGS ARE TO BE RETURNED UPON REQUEST OF THE FORWARDING RECIPIENT.

PART	REV	DESCRIPTION	DRW	CHKR	DE	DVR	DM	DATE
	0	ISSUED FOR CONSTRUCTION	RM	BW	JL		LE	06/2017

REVISION OR ISSUE PURPOSE

PE	DATE

REVISION APPROVALS

WE	AR	CV	ST	HV	EM	FP	PD	EE	IE	M	NP

SQUAD CHECK

RPE: JAMES KEITH LANDMAN, REGISTERED ENGINEER, AGRICULTURE, No. 119038, STATE OF TENNESSEE

DRW	R MARKEN	06/16/17
CHKR	B WILKINSON	06/16/17
DE	J LANDMAN	06/16/17
DVR		
DM	L ELLIS	06/16/17
PE	Teresa J. Pierce, P.E.	

REV. DATE — DRAWING APPROVALS — DATE

UCOR URS | CH2M Oak Ridge LLC

OF200 Mercury Treatment Facility

Designed by URS|CH2M Oak Ridge LLC (UCOR) for the Department of Energy
Oak Ridge Office of Environmental Management under U. S. Government contract DE-SC-0004645

Y-12 National Security Complex managed and operated by Consolidated Nuclear Security, LLC for the Department of Energy under U.S. Government contract DE-NA0001942 • Oak Ridge, Tennessee •

PROJECT NAME:
OF200 MERCURY TREATMENT FACILITY
ELECTRICAL
STANDARD DETAILS - SHEET 2 OF 10

USE	DISC	DT	DC	CM	SYSTEM	STAT	SIZE	BLDG	FL	CLASS
3	E	Y	K	NC	FAC	AR	E	9410-02	X	U

SH.	OF	TYPE		PART	REV
2	10	DD	E941002-F-0070	000	0

662886

ISSUED FOR CONSTRUCTION

6/22/2017 11:01:18 AM
E941002-F-0070.dgn