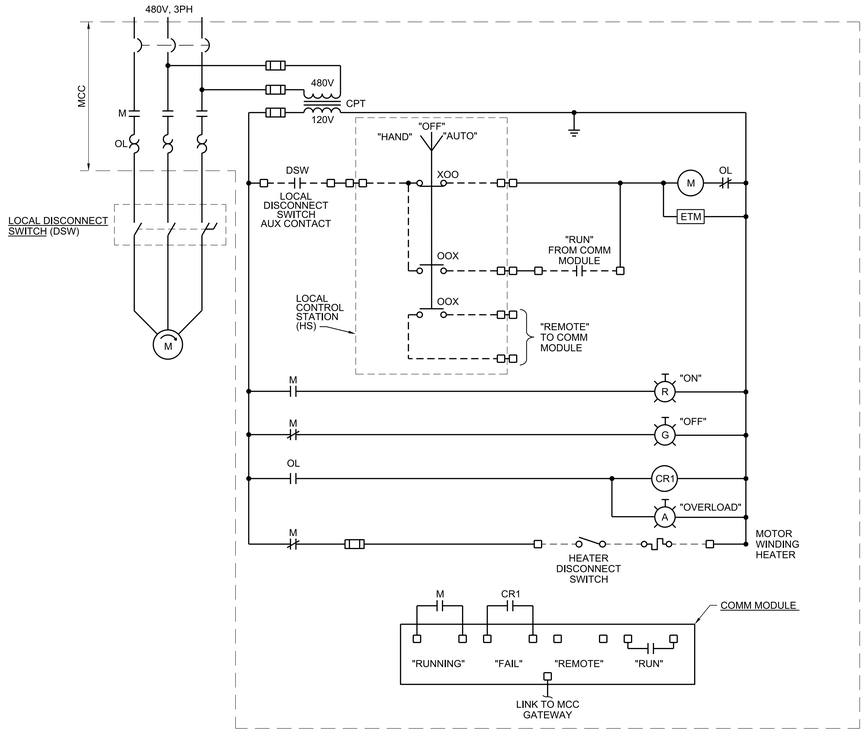

EQUALIZATION TANK MIXER
THICKENING AID POLYMER MIXER

CHTR-M-400
CHEM-M-513

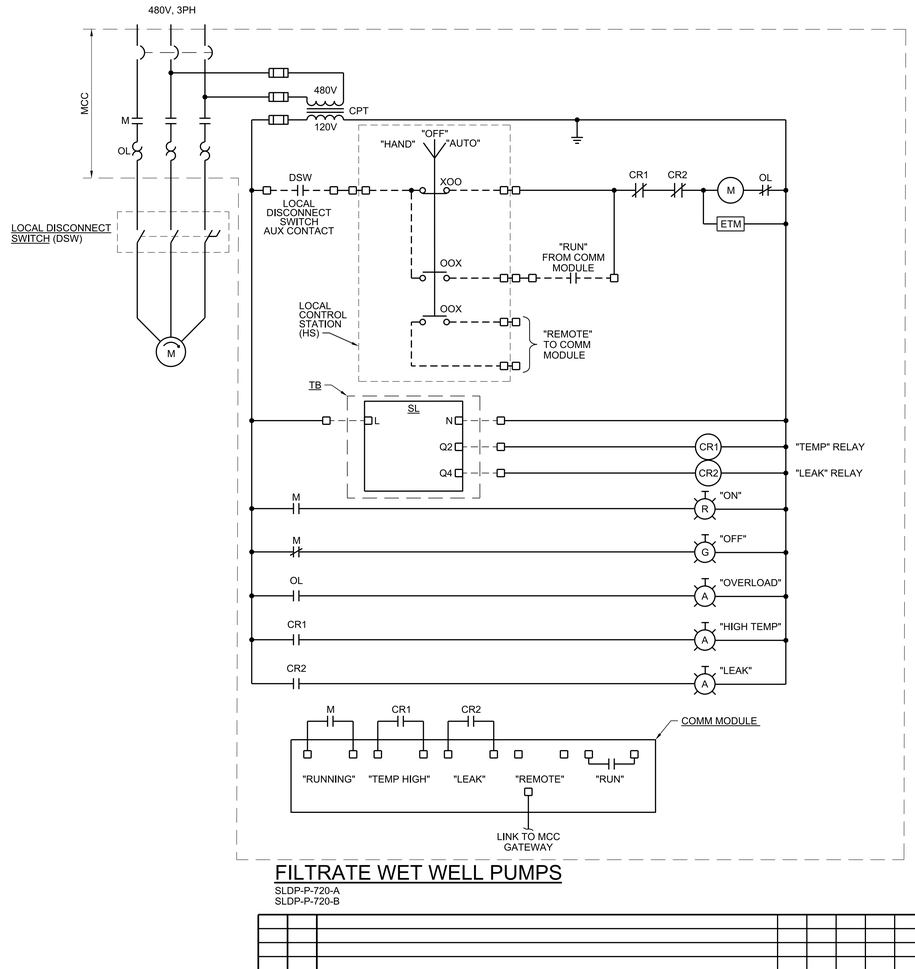

FILTRATE WET WELL PUMPS

SLDP-P-720-A
SLDP-P-720-B

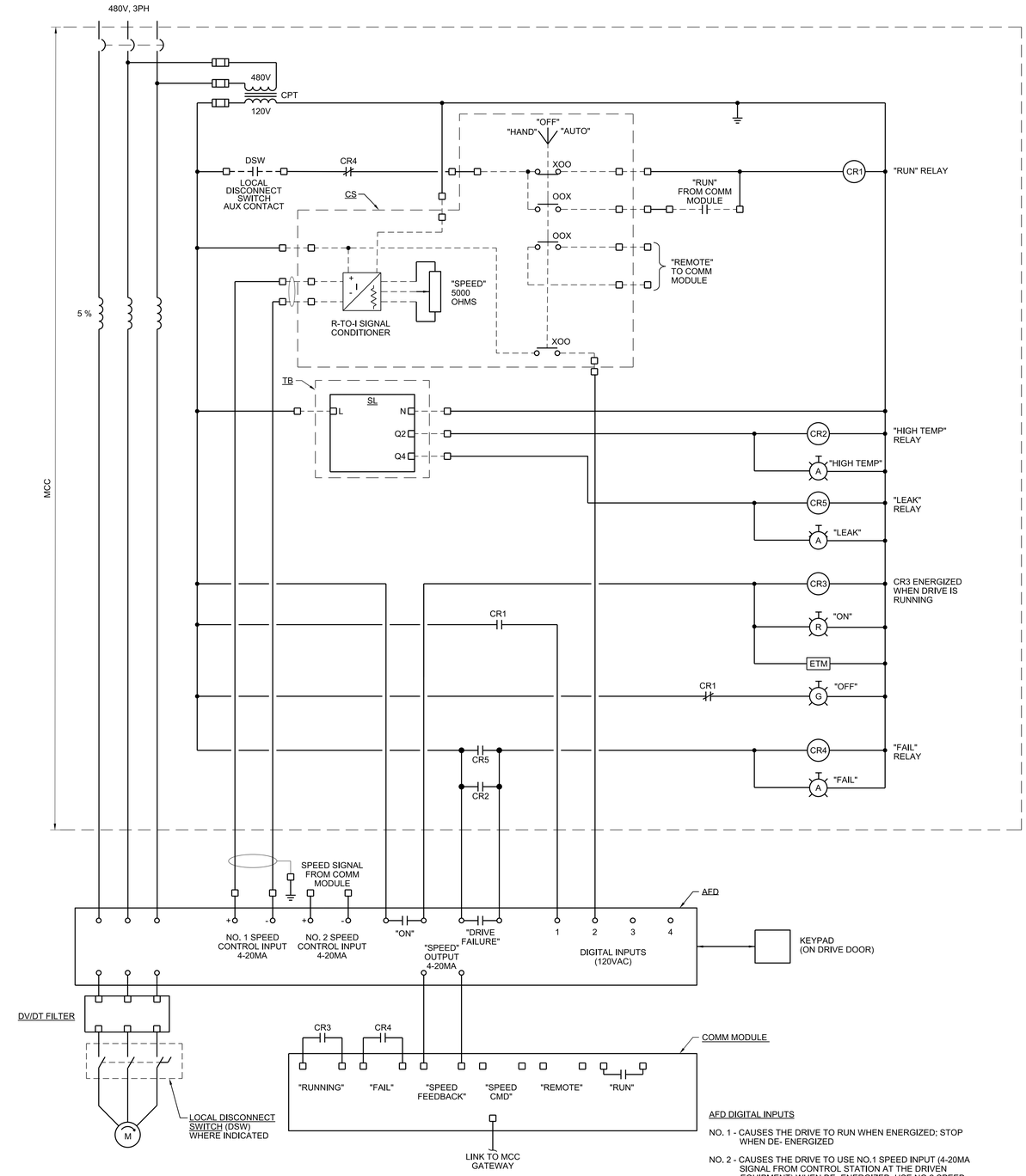

AFD DIGITAL INPUTS

NO. 1 - CAUSES THE DRIVE TO RUN WHEN ENERGIZED; STOP WHEN DE- ENERGIZED

NO. 2 - CAUSES THE DRIVE TO USE NO.1 SPEED INPUT (4-20MA SIGNAL FROM CONTROL STATION AT THE DRIVEN EQUIPMENT) WHEN DE- ENERGIZED; USE NO.2 SPEED INPUT (FROM PLC) WHEN ENERGIZED.

NO. 3 - SPARE

NO. 4 - SPARE

BACKWASH SUPPLY PUMP

FLTR-P-600-A
FLTR-P-600-B

UCOR
URS | CH2M Oak Ridge LLC

OF200 Mercury Treatment Facility

Designed by URS|CH2M Oak Ridge LLC (UCOR) for the Department of Energy
Oak Ridge Office of Environmental Management
under U. S. Government contract DE-SC-0004645

Y-12 National Security Complex managed and operated by Consolidated Nuclear Security, LLC for the Department of Energy under U.S. Government contract DE-NA0001942
• Oak Ridge, Tennessee •

PART	REV	DESCRIPTION	DRW	CHKR	DE	DVR	DM	DATE
	Ø	ISSUED FOR CONSTRUCTION	SF	BW	DE		LE	06/2017

REVISION OR ISSUE PURPOSE

PE	DATE

REVISION APPROVALS

WE	AR	CV	ST	HV	EM	FP	PD	EE	IE	M	NP

SQUAD CHECK

RPE: JAMES KEITH LANDMAN, REGISTERED ENGINEER, AGENCY No. 119038, STATE OF TENNESSEE

REV.	DATE	DRAWING APPROVALS		DATE
		DRW	S FLASKA	06/16/17
		CHKR	B WILKINSON	06/16/17
		DE	D ENGEL	06/16/17
		DVR		
		DM	L ELLIS	06/16/17
		PE	Teresa J. Pierce, P.E.	

PROJECT NAME:
OF200 MERCURY TREATMENT FACILITY

ELECTRICAL
TREATMENT FACILITY
MOTOR CONTROL DIAGRAM

USE	DISC	DT	DC	CM	SYSTEM	STAT	SIZE	BLDG	FL	CLASS
3	E	Y	G	NC	FAC	AR	E	9410-02	X	U

SH.	OF	TYPE		PART	REV
1	1	DD	E941002-F-0065	000	0

662886

ISSUED FOR CONSTRUCTION

THIS DRAWING IS LOANED FOR SOLE USE OF THE INTENDED RECIPIENT AND ONLY FOR THE LIMITED PURPOSES FOR WHICH IT WAS PROVIDED. USE BY OTHER ENTITIES OR FOR OTHER PURPOSES IS PROHIBITED AND AT THE USER'S OWN RISK. DRAWINGS ARE TO BE RETURNED UPON REQUEST OF THE FORWARDING RECIPIENT.

6/22/2017 10:47:47 AM
E941002-F-0065.dgn