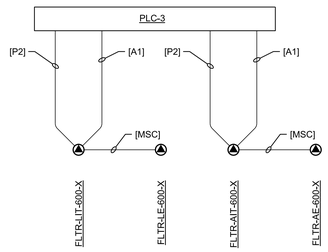

X
A
B

CBD-13
NTS

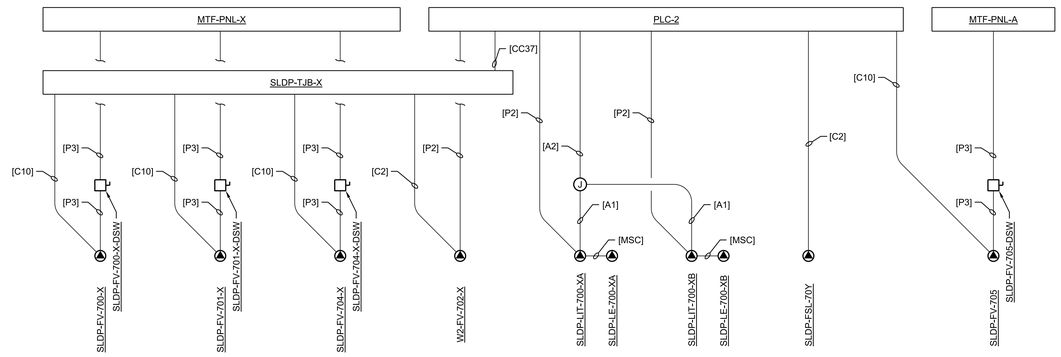

X	Y
A	1
B	2
C	3

CBD-14
NTS

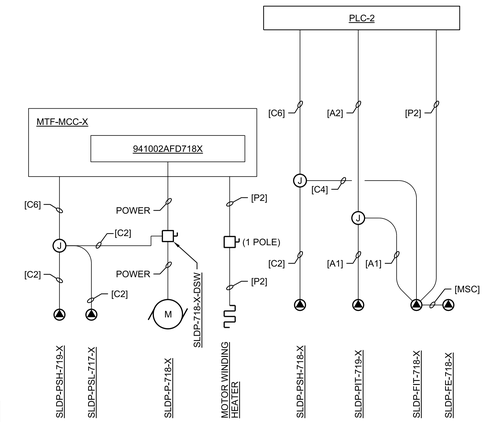

X
A
B

CBD-15
NTS

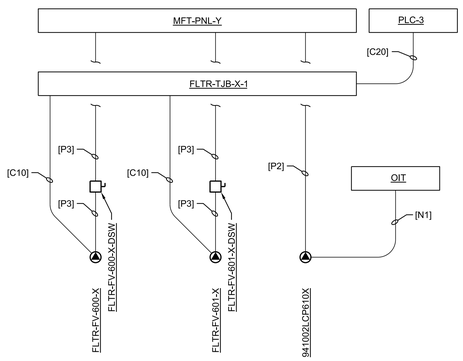

X	Y
A	A
B	B
C	C
D	A
E	B
F	C

CBD-16
NTS

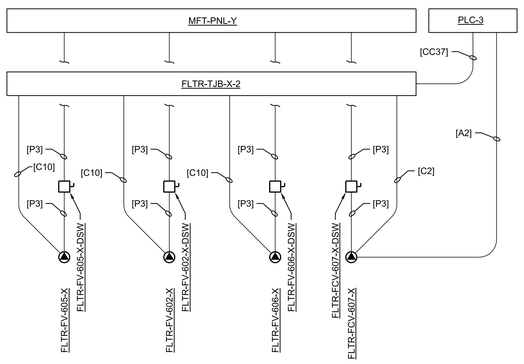

X	Y
A	A
B	B
C	C
D	A
E	B
F	C

CBD-17
NTS

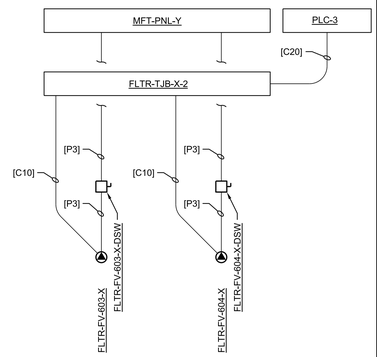

X	Y
A	A
B	B
C	C
D	A
E	B
F	C

CBD-18
NTS

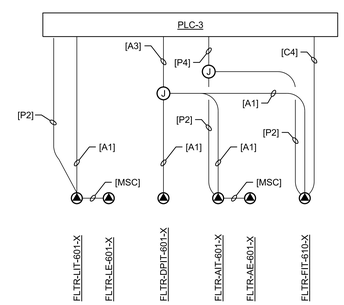

X
A
B
C
D
E
F

CBD-19
NTS

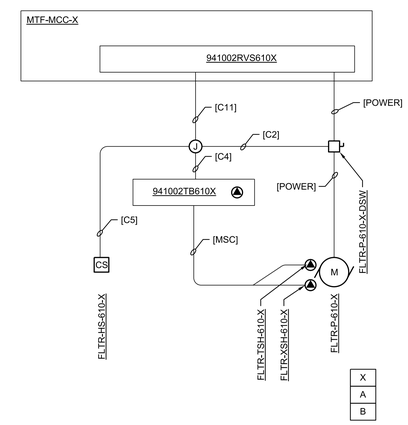

X
A
B

CBD-20
NTS

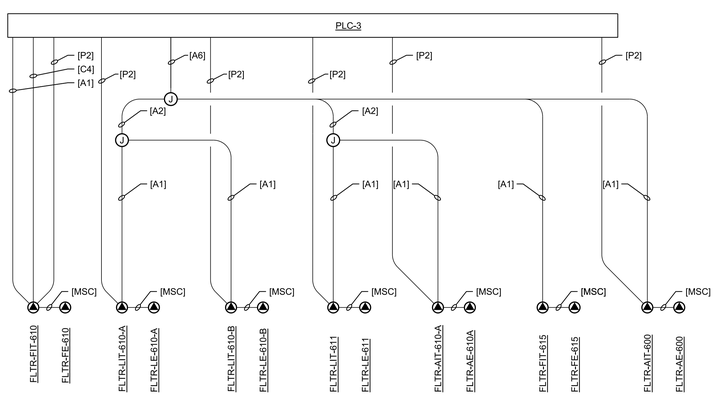

CBD-21
NTS

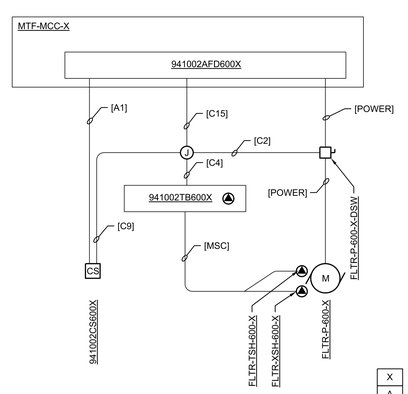

X
A
B

CBD-22
NTS

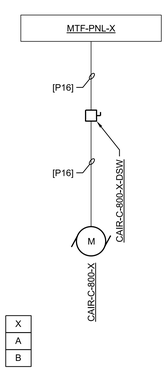

X
A
B

CBD-23
NTS

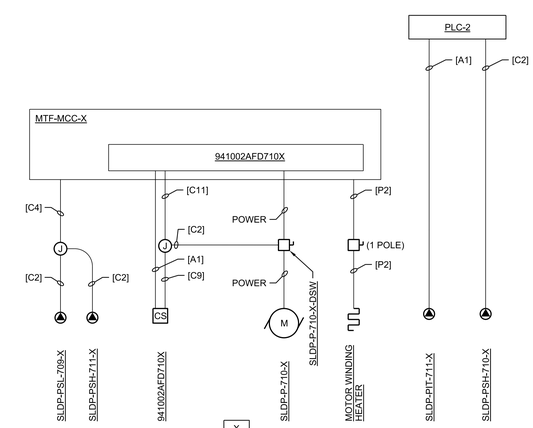

X
A
B
C

CBD-24
NTS

UCOR
URS | CH2M
Oak Ridge LLC

OF200 Mercury Treatment Facility
Designed by URS|CH2M Oak Ridge LLC (UCOR) for the Department of Energy
Oak Ridge Office of Environmental Management
under U. S. Government contract DE-SC-0004645

Y-12 National Security Complex managed and operated by Consolidated Nuclear Security, LLC for the Department of Energy under U.S. Government contract DE-NA0001942
• Oak Ridge, Tennessee •

PROJECT NAME:
OF200 MERCURY TREATMENT FACILITY

ELECTRICAL
TREATMENT FACILITY
CABLE BLOCK DIAGRAMS – MTF

USE	DISC	DT	DC	CM	SYSTEM	STAT	SIZE	BLDG	FL	CLASS
3	E	Y	G	NC	FAC	AR	E	9410-02	X	U

SH.	OF	TYPE		PART	REV
1	1	DD	E941002-F-0060	000	0

662886

PART	REV	DESCRIPTION	DRW	CHKR	DE	DVR	DM	DATE
	0	ISSUED FOR CONSTRUCTION	KB	BW	GK		LE	06/2017

REVISION OR ISSUE PURPOSE

PE	DATE

REVISION APPROVALS

WE	AR	CV	ST	HV	EM	FP	PD	EE	IE	M	NP

SQUAD CHECK

REV.	DATE

DRAWING APPROVALS

		DATE
DRW	K BARTLETT	06/16/17
CHKR	B WILKINSON	06/16/17
DE	G KLOSSNER	06/16/17
DVR		
DM	L ELLIS	06/16/17
PE	Teresa J. Pierce, P.E.	

RPE
JAMES KEITH LANDMAN
REGISTERED ENGINEER
AGRICULTURE
No. 110777
STATE OF TENNESSEE
6-22-2017

ISSUED FOR CONSTRUCTION

THIS DRAWING IS LOANED FOR SOLE USE OF THE INTENDED RECIPIENT AND ONLY FOR THE LIMITED PURPOSES FOR WHICH IT WAS PROVIDED. USE BY OTHER ENTITIES OR FOR OTHER PURPOSES IS PROHIBITED AND AT THE USER'S OWN RISK. DRAWINGS ARE TO BE RETURNED UPON REQUEST OF THE FORWARDING RECIPIENT.