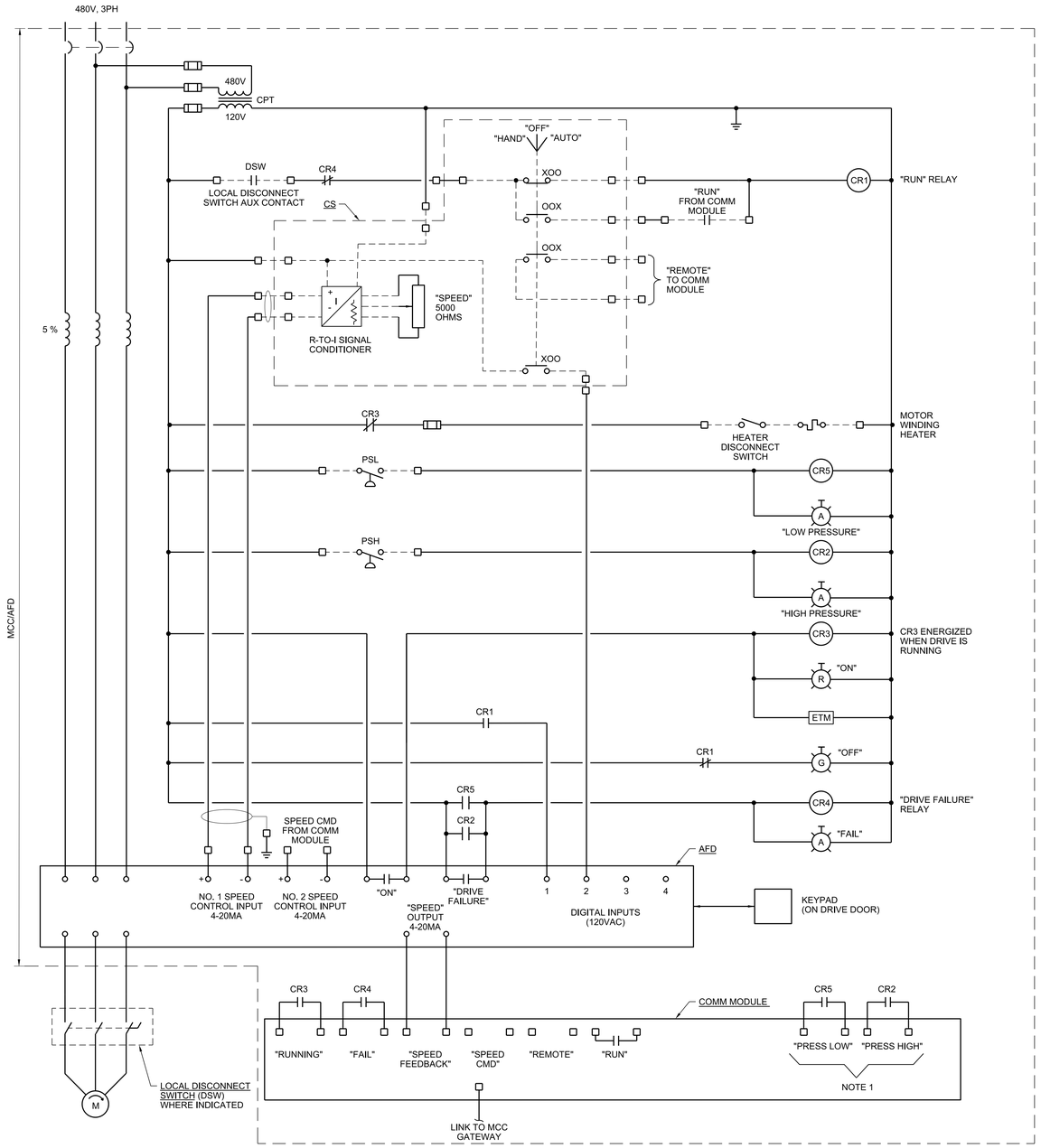

NOTES

1. PRESSURE LOW AND PRESSURE HIGH INPUTS FOR RECYCLE SLUDGE PUMPS ONLY.

AFD DIGITAL INPUTS

NO. 1 - CAUSES THE DRIVE TO RUN WHEN ENERGIZED; STOP WHEN DE- ENERGIZED

NO. 2 - CAUSES THE DRIVE TO USE NO.1 SPEED INPUT (4-20MA SIGNAL FROM CONTROL STATION AT THE DRIVEN EQUIPMENT) WHEN DE- ENERGIZED; USE NO.2 SPEED INPUT (FROM PLC) WHEN ENERGIZED.

NO. 3 - SPARE

NO. 4 - SPARE

EQUALIZATION TANK DISCHARGE PUMPS
RECYCLE SLUDGE PUMPS
SLUDGE WASTE PUMPS

CHTR-P-400-A
CHTR-P-400-B
CHTR-P-400-C
SLDP-P-700-A
SLDP-P-700-B
SLDP-P-700-C
SLDP-P-710-A
SLDP-P-710-B
SLDP-P-710-C

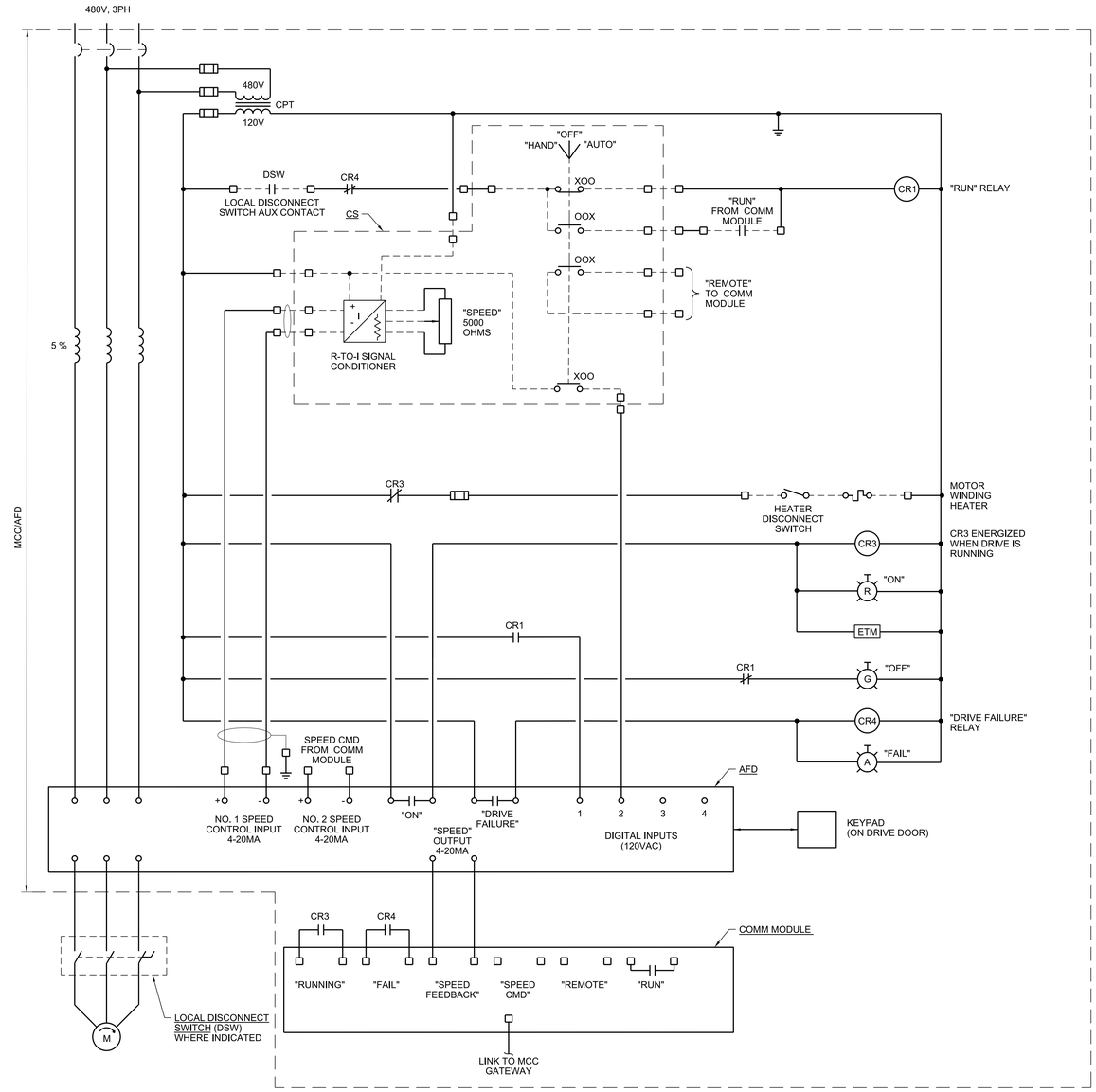

AFD DIGITAL INPUTS

NO. 1 - CAUSES THE DRIVE TO RUN WHEN ENERGIZED; STOP WHEN DE- ENERGIZED

NO. 2 - CAUSES THE DRIVE TO USE NO.1 SPEED INPUT (4-20MA SIGNAL FROM CONTROL STATION AT THE DRIVEN EQUIPMENT) WHEN DE- ENERGIZED; USE NO.2 SPEED INPUT (FROM PLC) WHEN ENERGIZED.

NO. 3 - SPARE

NO. 4 - SPARE

DECLORINATION TANK MIXERS
COPRECIP REACTION TANK MIXERS
CLARIFIER POLYMER IN-LINE MIXERS
FLOCCULANT TANK MIXERS
THICKENING AID POLYMER SOLUTION PUMPS

CHTR-M-410-A
CHTR-M-410-B
CHTR-M-420-A
CHTR-M-420-B
CHTR-ILM-421-A
CHTR-ILM-421-B
CHTR-M-430-A
CHTR-M-430-B
CHEM-P-513-C
CHEM-P-513-D

UCOR URS | CH2M Oak Ridge LLC

OF200 Mercury Treatment Facility

Designed by URS|CH2M Oak Ridge LLC (UCOR) for the Department of Energy Oak Ridge Office of Environmental Management under U. S. Government contract DE-SC-0004645

Y-12 National Security Complex managed and operated by Consolidated Nuclear Security, LLC for the Department of Energy under U.S. Government contract DE-NA0001942 • Oak Ridge, Tennessee •

PROJECT NAME:
OF200 MERCURY TREATMENT FACILITY

ELECTRICAL
TREATMENT FACILITY
MOTOR CONTROL DIAGRAM

USE	DISC	DT	DC	CM	SYSTEM	STAT	SIZE	BLDG	FL	CLASS
3	E	Y	G	NC	FAC	AR	E	9410-02	X	U

SH.	OF	TYPE		PART	REV
1	1	DD	E941002-F-0063	000	0

PART	REV	DESCRIPTION	DRW	CHKR	DE	DVR	DM	DATE
	0	ISSUED FOR CONSTRUCTION	SF	BW	DE		LE	06/2017

REVISION OR ISSUE PURPOSE

REVISION APPROVALS: PE, DATE

SQUAD CHECK: WE, AR, CV, ST, HV, EM, FP, PD, EE, IE, M, NP

RPE: JAMES KEITH LANDMAN, REGISTERED ENGINEER, AGENCY OF PURE, ENGINEER, No. 119055, STATE OF TENNESSEE

DRAWING APPROVALS		DATE
DRW	S FLASKA	06/16/17
CHKR	B WILKINSON	06/16/17
DE	D ENGEL	06/16/17
DVR		
DM	L ELLIS	06/16/17
PE	Teresa J. Pierce, P.E.	

REV. DATE

THIS DRAWING IS LOANED FOR SOLE USE OF THE INTENDED RECIPIENT AND ONLY FOR THE LIMITED PURPOSES FOR WHICH IT WAS PROVIDED. USE BY OTHER ENTITIES OR FOR OTHER PURPOSES IS PROHIBITED AND AT THE USER'S OWN RISK. DRAWINGS ARE TO BE RETURNED UPON REQUEST OF THE FORWARDING RECIPIENT.

ISSUED FOR CONSTRUCTION

662886

6/22/2017 10:49:14 AM
E941002-F-0063 Design