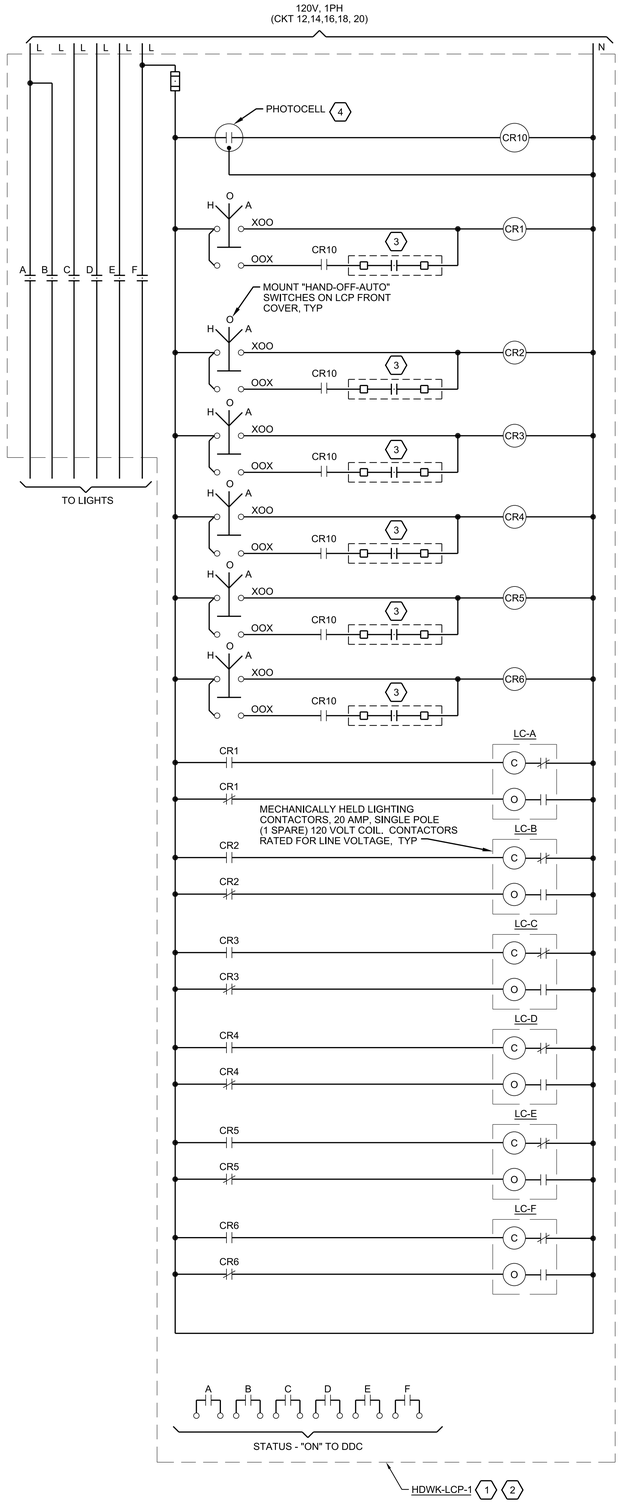

EXTERIOR LIGHTING CONTROL DIAGRAM, HDWK-LCP-1

HDWK-P-210-A
HDWK-P-210-B

GENERAL NOTES

A. FOR LEGENDS AND ABBREVIATIONS, AND GENERAL PROJECT NOTES, SEE SHEETS E941001-F-0001 AND E941001-F-0002.

B. QUANTITY OF LIGHTING CONTACTOR CONTACTS TO BE DETERMINED BY THE CONTRACTOR BASED ON THE NUMBER OF CIRCUITS TO THE PANELS AND LIGHTING COVERAGE AS SHOWN ON THE PLAN DRAWINGS.

SHEET KEYNOTES

1. NEMA 12 ENCLOSURE. CONTINUOUS HINGED DOOR. SIZE AS REQUIRED. MOUNT SO THAT BOTTOM OF ENCLOSURE AT MINIMUM 4'-0" AFF.

2. FOR EXTERIOR LIGHTING ZONES, FURNISH AND INSTALL LIGHTING CONTACTORS WITH ENGRAVED NAMEPLATES ON CONTACTOR AND HAND-OFF-AUTO SWITCH AS FOLLOWS IN:
   - CS-A: NORTH-EAST SITE LIGHTING
   - CS-B: NORTH-WEST SITE LIGHTING
   - CS-C: STORMWATER STORAGE TANK
   - CS-D:ROADWAY LIGHTING
   - CS-E:SOUTH SITE LIGHTING
   - CS-F: BUILDING WALL PACK

3. DIGITAL INPUT CONTACT FROM BUILDING DDC SYSTEM PROVIDES TIMER FUNCTION OF EXTERIOR LIGHTING CIRCUITS. EACH ZONE HAS AN INDEPENDENT CONNECTION TO THE DDC FOR INDIVIDUAL ZONE CONTROL AND STATUS.

4. PHOTOCELL IS MOUNTED ON NORTH SIDE OF BUILDING OUTSIDE OF ELECTRICAL ROOM.

THIS DRAWING IS LOANED FOR SOLE USE OF THE INTENDED RECIPIENT AND ONLY FOR THE LIMITED PURPOSES FOR WHICH IT WAS PROVIDED. USE BY OTHER ENTITIES OR FOR OTHER PURPOSES IS PROHIBITED AND AT THE USER'S OWN RISK. DRAWINGS ARE TO BE RETURNED UPON REQUEST OF THE FORWARDING RECIPIENT.

PART	REV	DESCRIPTION (REVISION OR ISSUE PURPOSE)	DRW	CHKR	DE	DVR	DM	DATE
	0	ISSUED FOR CONSTRUCTION	SF	BW	DE		LE	06/2017

REVISION APPROVALS: PE, DATE

SQUAD CHECK: WE, AR, CV, ST, HV, EM, FP, PD, EE, IE, M, NP

REV.	DATE

DRAWING APPROVALS		DATE
DRW	S FLASKA	06/16/17
CHKR	B WILKINSON	06/16/17
DE	D ENGEL	06/16/17
DVR		
DM	L ELLIS	06/16/17
PE	Teresa J. Pierce, P.E.	

RPE: JAMES KEITH LANDMAN, REGISTERED ENGINEER, AGRICULTURE, STATE OF TENNESSEE

UCOR URS | CH2M Oak Ridge LLC

OF200 Mercury Treatment Facility
Designed by URS|CH2M Oak Ridge LLC (UCOR) for the Department of Energy
Oak Ridge Office of Environmental Management
under U. S. Government contract DE-SC-0004645

Y-12 National Security Complex managed and operated by Consolidated Nuclear Security, LLC for the Department of Energy under U.S. Government contract DE-NA0001942 • Oak Ridge, Tennessee •

PROJECT NAME:
OF200 MERCURY TREATMENT FACILITY

ELECTRICAL
HEADWORKS
LIGHTING CONTROL DIAGRAMS

USE	DISC	DT	DC	CM	SYSTEM	STAT	SIZE	BLDG	FL	CLASS
3	E	L	G	NC	FAC	AR	E	9410-01	X	U

SH.	OF	TYPE		PART	REV
1	1	DD	E941001-F-0036	000	0

662886

ISSUED FOR CONSTRUCTION

6/22/2017 10:45:32 AM