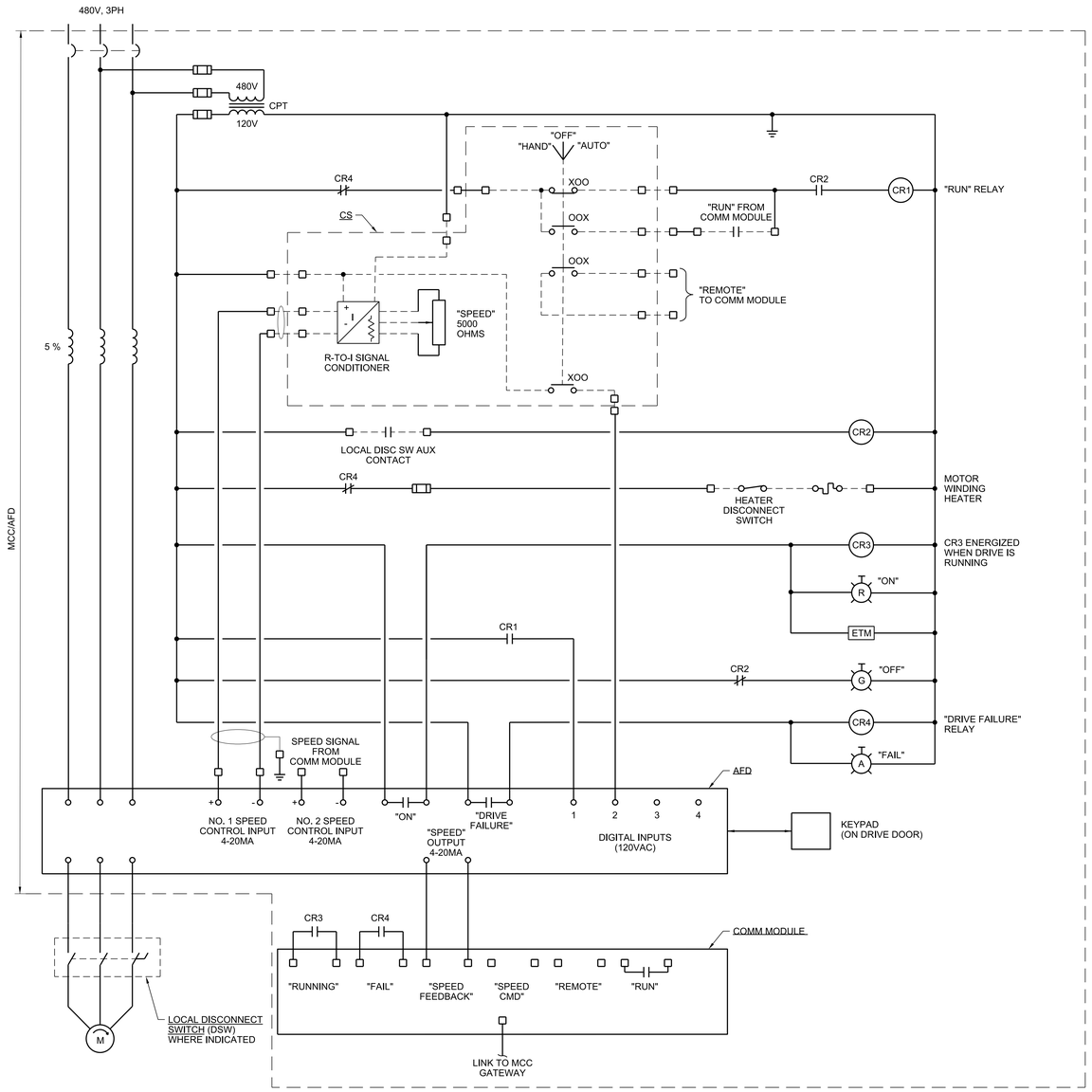

AFD DIGITAL INPUTS

NO. 1 - CAUSES THE DRIVE TO RUN WHEN ENERGIZED; STOP WHEN DE- ENERGIZED

NO. 2 - CAUSES THE DRIVE TO USE NO.1 SPEED INPUT (4-20MA SIGNAL FROM CONTROL STATION AT THE DRIVEN EQUIPMENT) WHEN DE- ENERGIZED; USE NO.2 SPEED INPUT (4-20MA FROM PLC) WHEN ENERGIZED.

NO. 3 - SPARE

NO. 4 - SPARE

BASE FLOW PUMPS
GRIT PUMPS

HDWK-P-100-A
HDWK-P-100-B
HDWK-P-100-C
HDWK-P-300-A
HDWK-P-300-B
HDWK-P-300-C

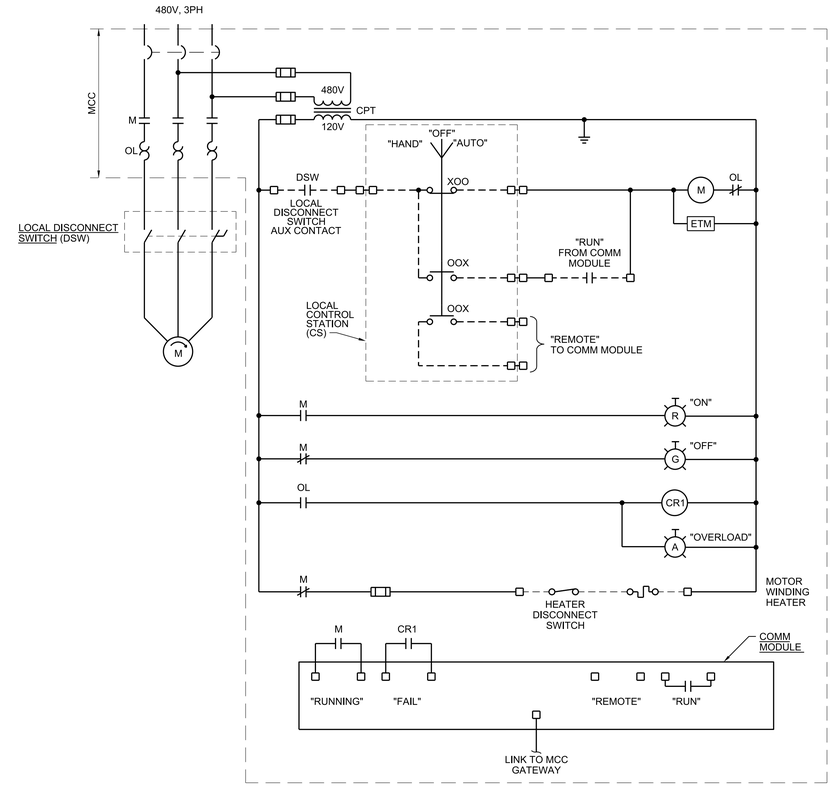

GRIT CHAMBERS

HDWK-M-101
HDWK-M-201

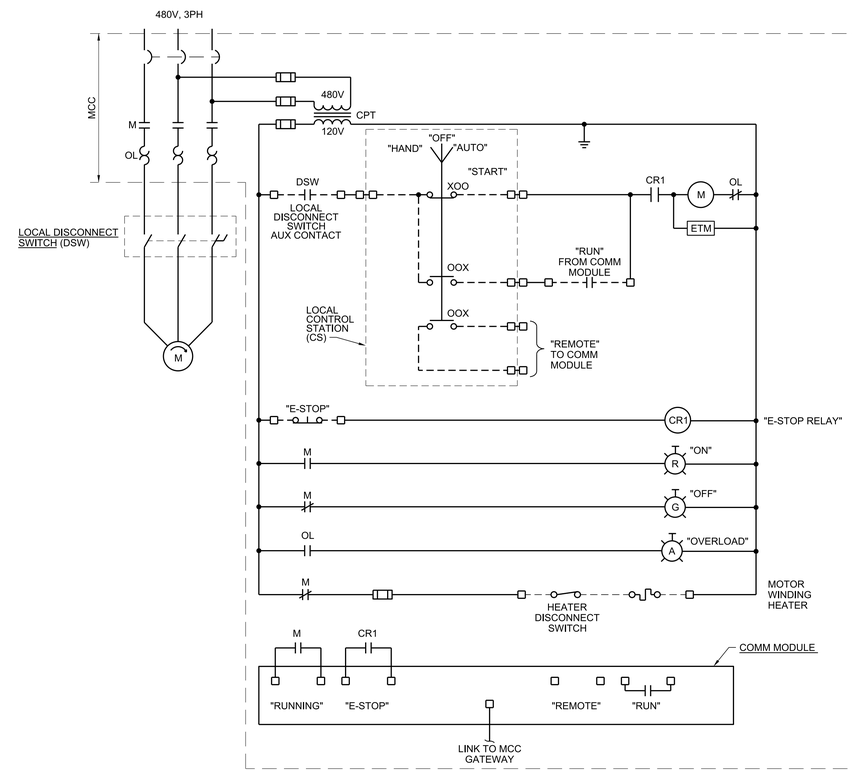

GRIT CYCLONE CLASSIFIER

HDWK-GC-301

THIS DRAWING IS LOANED FOR SOLE USE OF THE INTENDED RECIPIENT AND ONLY FOR THE LIMITED PURPOSES FOR WHICH IT WAS PROVIDED. USE BY OTHER ENTITIES OR FOR OTHER PURPOSES IS PROHIBITED AND AT THE USER'S OWN RISK. DRAWINGS ARE TO BE RETURNED UPON REQUEST OF THE FORWARDING RECIPIENT.

PART	REV	DESCRIPTION	DRW	CHKR	DE	DVR	DM	DATE
	Ø	ISSUED FOR CONSTRUCTION	SF	BW	DE		LE	06/2017

REVISION OR ISSUE PURPOSE

PE	DATE

REVISION APPROVALS

WE	AR	CV	ST	HV	EM	FP	PD	EE	IE	M	NP

SQUAD CHECK

RPE

JAMES KEITH LANDMAN REGISTERED ENGINEER AGRICULTURE CERTIFICATE No. 119038 STATE OF TENNESSEE

REV.	DATE

DRAWING APPROVALS

		DATE
DRW	S FLASKA	06/16/17
CHKR	B WILKINSON	06/16/17
DE	D ENGEL	06/16/17
DVR		
DM	L ELLIS	06/16/17
PE	Teresa J. Pierce, P.E.	

UCOR URS | CH2M Oak Ridge LLC

OF200 Mercury Treatment Facility

Designed by URS|CH2M Oak Ridge LLC (UCOR) for the Department of Energy
Oak Ridge Office of Environmental Management
under U. S. Government contract DE-SC-0004645

Y-12 National Security Complex managed and operated by Consolidated Nuclear Security, LLC for the Department of Energy under U.S. Government contract DE-NA0001942 • Oak Ridge, Tennessee •

PROJECT NAME:
OF200 MERCURY TREATMENT FACILITY

ELECTRICAL
HEADWORKS
MOTOR CONTROL DIAGRAM - SHEET 1

USE	DISC	DT	DC	CM	SYSTEM	STAT	SIZE	BLDG	FL	CLASS
3	E	Y	G	NC	FAC	AR	E	9410-01	X	U

SH.	OF	TYPE		PART	REV
1	3	DD	E941001-F-0033	000	0

ISSUED FOR CONSTRUCTION

662886

6/22/2017 10:34:15 AM
E941001F0033.dgn