GENERAL NOTES

A. FOR ENS LEGEND AND GENERAL COMMUNICATIONS NOTES, SEE DRAWING E941001-F-0003.

B. COORDINATE LOCATION OF DEVICES WITH OTHER SYSTEMS (HVAC, LIGHTS, ETC.) BUT MAINTAIN ADEQUATE SPACING TO MEET NFPA AUDIBILITY OR COVERAGE REQUIREMENTS.

C. UNLESS OTHERWISE NOTED, QUANTITY AND SIZING OF CONDUIT AND CONDUCTORS ARE THE RESPONSIBILITY OF THE ENS CONTRACTOR. ENS CONTRACTOR RESPONSIBLE TO PROVIDE A COMPLETE AND OPERATIONAL SYSTEM.

SHEET KEYNOTES

1. MOUNT HORN AT APPROX. 14'-0" AFG.
2. MOUNT SPEAKER TIGHT TO BOTTOM CHORD OF ROOF TRUSS.
3. ENS TERMINAL JUNCTION BOX. SEE RISER DIAGRAM ON DWG E941001-F-0008.

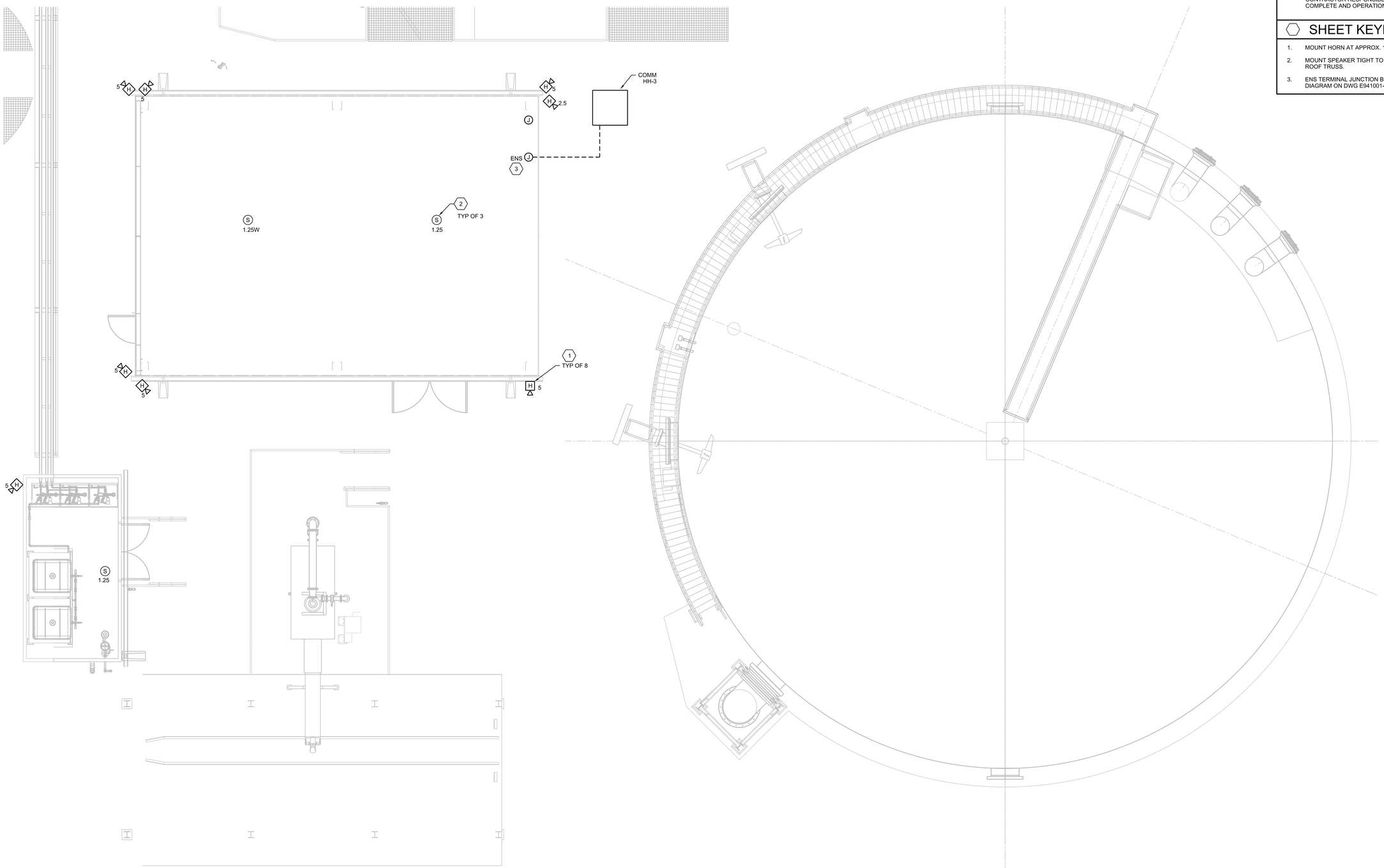

N

UPPER EMERGENCY NOTIFICATION SYSTEM PLAN

1/4"=1'-0"

0 4 8 12

1/4"=1'-0"

THIS DRAWING IS LOANED FOR SOLE USE OF THE INTENDED RECIPIENT AND ONLY FOR THE LIMITED PURPOSES FOR WHICH IT WAS PROVIDED. USE BY OTHER ENTITIES OR FOR OTHER PURPOSES IS PROHIBITED AND AT THE USER'S OWN RISK. DRAWINGS ARE TO BE RETURNED UPON REQUEST OF THE FORWARDING RECIPIENT.

PART	REV	DESCRIPTION	DRW	CHKR	DE	DVR	DM	DATE
	0	ISSUED FOR CONSTRUCTION	JG	BW	CC		LE	06/2017

REVISION OR ISSUE PURPOSE

PE	DATE

REVISION APPROVALS

WE	AR	CV	ST	HV	EM	FP	PD	EE	IE	M	NP

SQUAD CHECK

RPE

JAMES KEITH LANDMAN REGISTERED ENGINEER AGRICULTURE No. 119138 STATE OF TENNESSEE

REV.	DATE

DRAWING APPROVALS

		DATE
DRW	J GARIBAY	06/16/17
CHKR	B WILKINSON	06/16/17
DE	C CURTIS	06/16/17
DVR		
DM	L ELLIS	06/16/17
PE	Teresa J. Pierce, P.E.	

Digitally signed by Teresa J. Pierce
DN: cn=Teresa J. Pierce, P.E., o=UCOR LLC, ou=Project Engineer, email=tjpierce@ucor.com, c=US
Date: 2017.06.16 15:05:16-04'00'

UCOR
URS | CH2M
Oak Ridge LLC

OF200 Mercury Treatment Facility

Designed by URS|CH2M Oak Ridge LLC (UCOR) for the Department of Energy
Oak Ridge Office of Environmental Management
under U. S. Government contract DE-SC-0004645

Y-12 National Security Complex managed and operated by Consolidated Nuclear Security, LLC for the Department of Energy under U.S. Government contract DE-NA0001942
« Oak Ridge, Tennessee »

PROJECT NAME:
OF200 MERCURY TREATMENT FACILITY

ELECTRICAL
HEADWORKS
UPPER ENS PLAN

USE	DISC	DT	DC	CM	SYSTEM	STAT	SIZE	BLDG	FL	CLASS
3	E	A	L	NC	FAC	AR	E	9410-01	1	U

SH.	OF	TYPE		PART	REV
1	1	DD	E941001-F-0022	000	0

662886

ISSUED FOR CONSTRUCTION

MicroStation

6/22/2017 10:40:42 AM
E941001F0022-0000.dgn