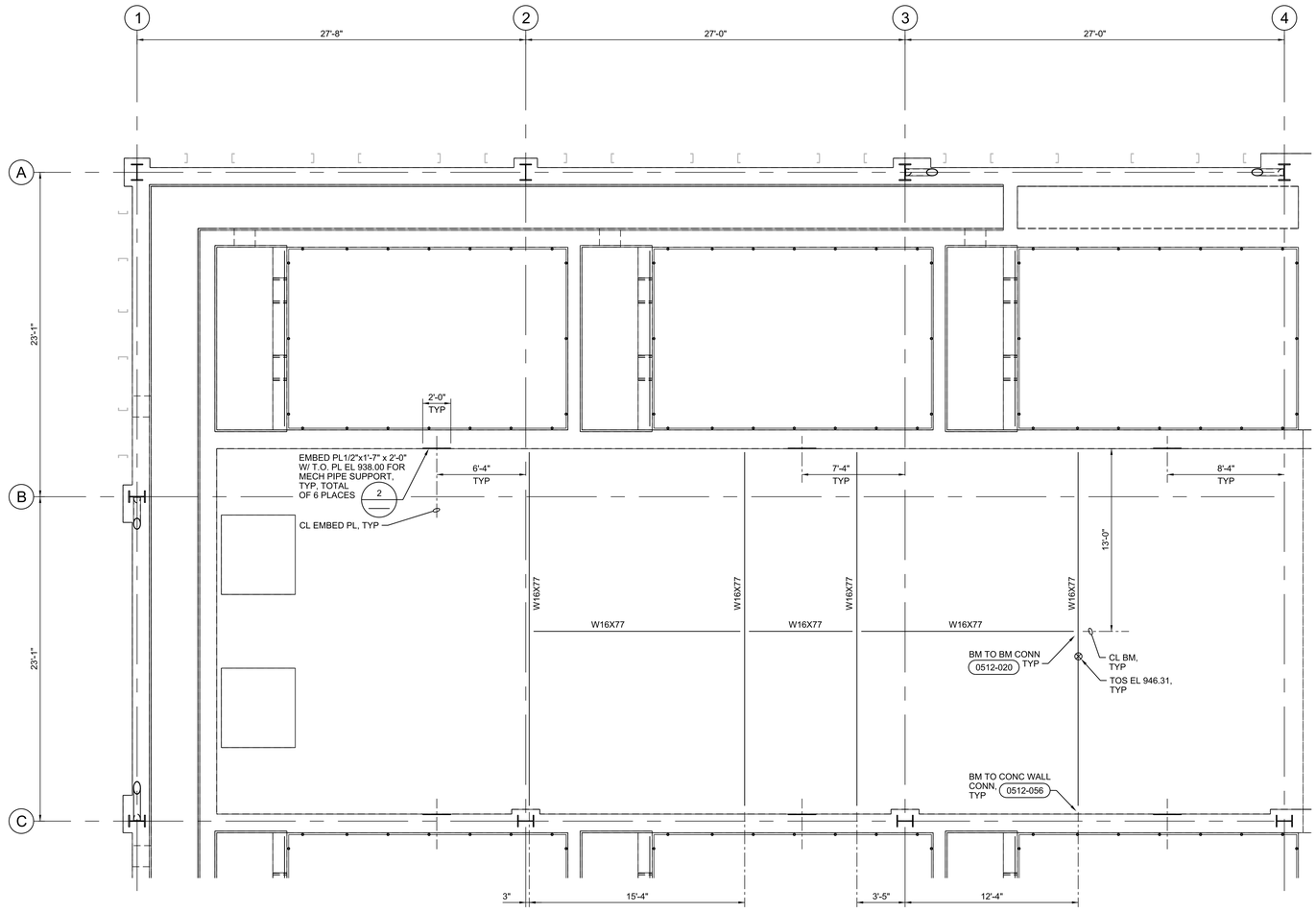

N

PIPE SUPPORTS AT SECOND LEVEL - PLAN

1/4"=1'-0"

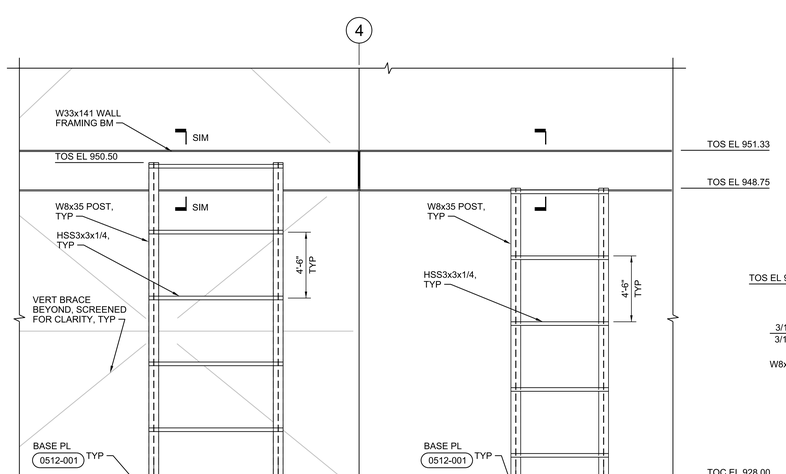

ELEVATION

1/4"=1'-0"

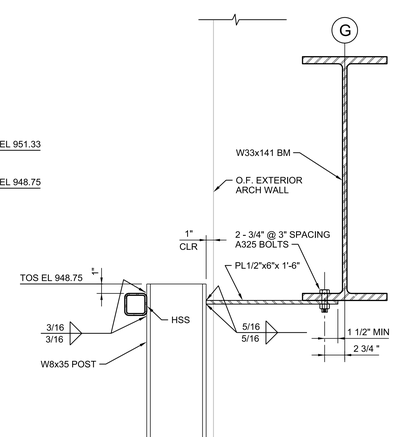

SECTION

1 1/2"=1'-0"

1 DETAIL

AS SHOWN

S941002-F-0009

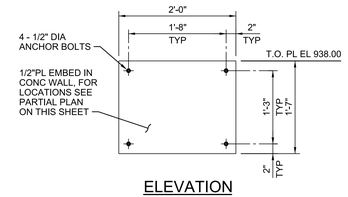

ELEVATION

2 DETAIL

1"=1'-0"

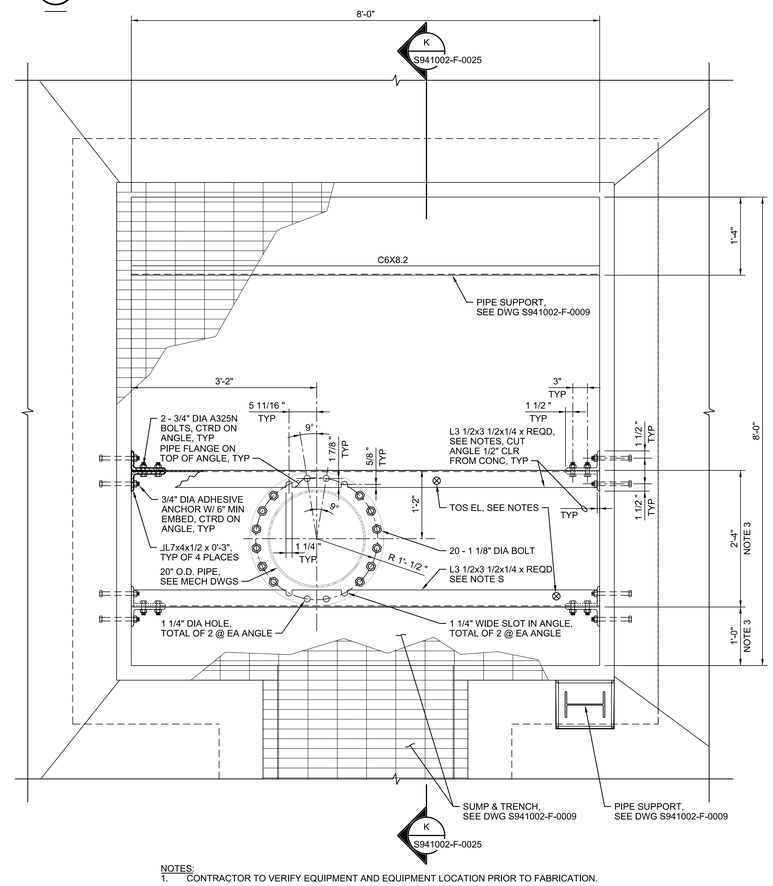

NOTES:

1. CONTRACTOR TO VERIFY EQUIPMENT AND EQUIPMENT LOCATION PRIOR TO FABRICATION.
2. CONTRACTOR TO VERIFY TOP OF STEEL ELEVATION WITH MECHANICAL DRAWINGS.

N

PARTIAL PLAN

3 DETAIL

1"=1'-0"

S941002-F-0009

THIS DRAWING IS LOANED FOR SOLE USE OF THE INTENDED RECIPIENT AND ONLY FOR THE LIMITED PURPOSES FOR WHICH IT WAS PROVIDED. USE BY OTHER ENTITIES OR FOR OTHER PURPOSES IS PROHIBITED AND AT THE USER'S OWN RISK. DRAWINGS ARE TO BE RETURNED UPON REQUEST OF THE FORWARDING RECIPIENT.

PART	REV	DESCRIPTION	DRW	CHKR	DE	DVR	DM	DATE
	Ø	ISSUED FOR CONSTRUCTION	ILT	AF	HE		LE	06/2017

REVISION OR ISSUE PURPOSE

REVISION APPROVALS: PE, DATE

SQUAD CHECK: WE, AR, CV, ST, HV, EM, FP, PD, EE, IE, M, NP

RPE: HARRY WILLIAM WILDS, STATE OF TENNESSEE, 102351, 6/30/17

DRAWING APPROVALS		DATE
DRW	I LAPINA-TRAUT	06/16/17
CHKR	A FIRTH	06/16/17
DE	H ELLIOTT	06/16/17
DVR		
DM	L ELLIS	06/16/17
PE	Teresa J. Pierce, P.E.	

REV. DATE

UCOR URS | CH2M Oak Ridge LLC

OF200 Mercury Treatment Facility

Designed by URS|CH2M Oak Ridge LLC (UCOR) for the Department of Energy
Oak Ridge Office of Environmental Management
under U. S. Government contract DE-SC-0004645

Y-12 National Security Complex managed and operated by Consolidated Nuclear Security, LLC for the Department of Energy under U.S. Government contract DE-NA0001942 • Oak Ridge, Tennessee •

PROJECT NAME:

OF200 MERCURY TREATMENT FACILITY

STRUCTURAL
TREATMENT FACILITY
PIPE SUPPORTS

USE	DISC	DT	DC	CM	SYSTEM	STAT	SIZE	BLDG	FL	CLASS
3	S	P	B	NC	FAC	AR	E	9410-02	P	U

SH.	OF	TYPE		PART	REV
1	1	DD	S941002-F-0035	000	0

662886

ISSUED FOR CONSTRUCTION

6/22/2017 11:30:24 AM
S941002-F-0035.dgn