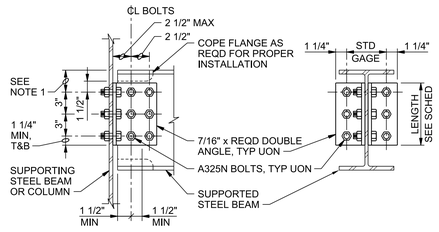

NOMINAL BEAM DEPTH, INCHES	ROWS OF BOLTS	BOLT DIA, INCHES	DOUBLE ANGLE, LENGTH, INCHES	COMMENTS
36	10	1"	2'-6"	-
33	9	1"	2'-3"	-
30	8	1"	2'-0"	-
27	7	1"	1'-8 1/2"	-
24	6	1"	1'-5 1/2"	-
21	5	1"	1'-2 1/2"	-
16-18	4	1"	0'-11 1/2"	-
12-15	3	1"	0'-8 1/2"	-
8-10	2	1"	0'-5 1/2"	-

NOTES:
1. DIMENSION SHALL BE 3" UNLESS OTHERWISE REQUIRED FOR PROPER FABRICATION.

COLLECTOR BEAM CONNECTION
NTS

0512-021

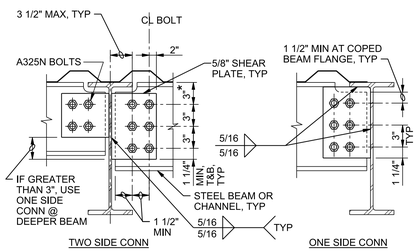

NOMINAL BEAM DEPTH, INCHES	ROWS OF BOLTS	BOLT DIA, INCHES	LENGTH OF SHEAR PLATE
27	8	1"	2'-0"
24	7	1"	1'-8 1/2"
21	6	1"	1'-5 1/2"
18	5	1"	1'-2 1/2"
16	4	1"	11 1/2"
12-15	3	1"	8 1/2"
8-10	2	1"	5 1/2"

NOTES:
1. THIS DETAIL APPLIES ONLY WHERE SPECIFICALLY SHOWN ON DRAWINGS.
2. (*) DIMENSION SHALL BE 3" UNLESS OTHERWISE REQUIRED FOR PROPER FABRICATION.

COLLECTOR BEAM SINGLE PLATE SHEAR CONNECTION
NTS

0512-023

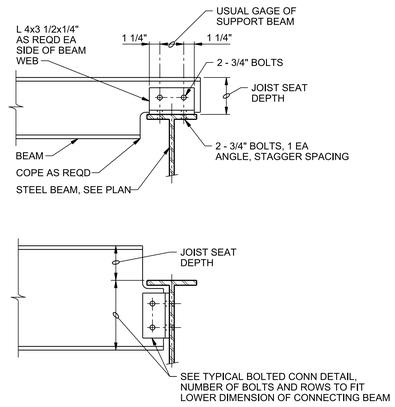

COPED BEAM CONNECTION - STEEL
NTS

0512-026

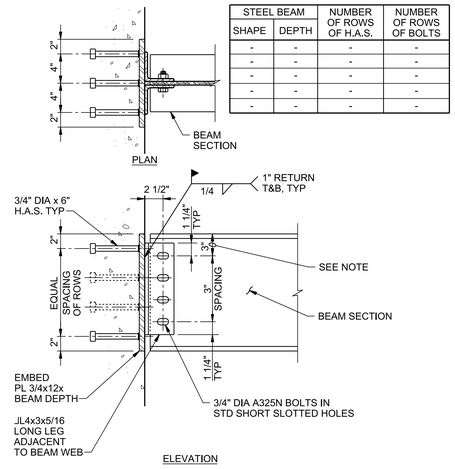

STEEL BEAM		NUMBER OF ROWS OF H.A.S.	NUMBER OF ROWS OF BOLTS
SHAPE	DEPTH		
-	-	-	-
-	-	-	-
-	-	-	-
-	-	-	-
-	-	-	-

NOTE:
2 1/2" FOR 8" BEAM DEPTH.

EMBEDDED CONNECTION - STEEL
NTS

0512-055

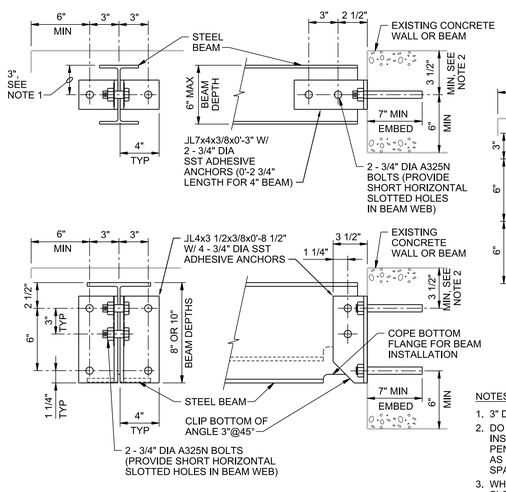

NOTES:
1. 3" DIMENSION TYPICAL EXCEPT 2 1/2" FOR 5" BEAMS AND 2" FOR 4" BEAMS.
2. DO NOT CUT EXISTING CONCRETE BEAM TOP REINFORCING DURING DRILL-IN ANCHOR INSTALLATION. FIELD LOCATE BEAM REINFORCING PRIOR TO FABRICATION WITH GROUND PENETRATING RADAR OR OTHER ACCEPTABLE MEANS. ADD LENGTH TO CLIP ANGLES AS REQUIRED TO LOWER ANCHORS TO CLEAR REINFORCING WHILE MAINTAINING SPACING AND EDGE DISTANCE AS SHOWN.
3. WHERE BOTH ENDS OF BEAM ARE ATTACHED TO A WALL, PROVIDE LONG HORIZONTALLY SLOTTED HOLES IN BEAM WEB AT ONE END. TIGHTEN NUTS SNUG TIGHT, BACK OFF 1/2 TURN, AND LOCK WITH DOUBLE NUT.

BEAM/WALL CONNECTION - STEEL
NTS

0512-056

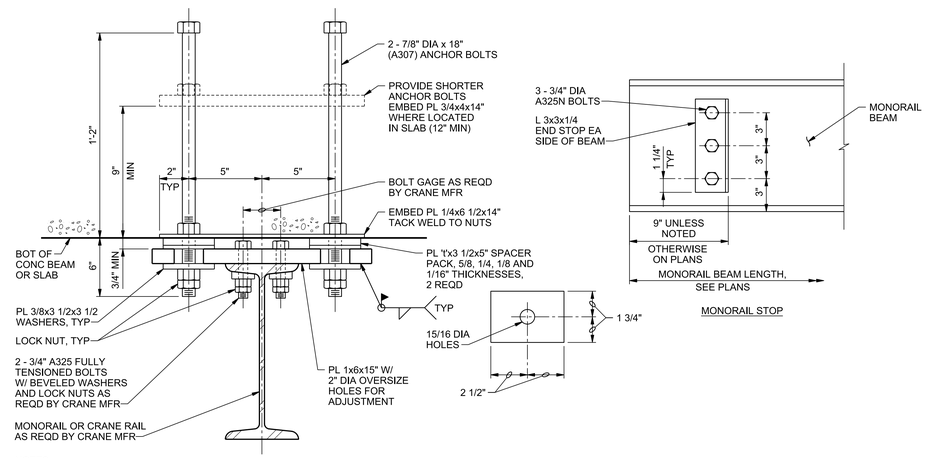

NOTES:
PROVIDE EMBED PLATES IN ALL PERPENDICULAR CONCRETE BEAMS INTERSECTING MONORAIL OR CRANE RAIL.

MONORAIL DETAILS (TYPE A)
NTS

0512-101

PART	REV	DESCRIPTION	DRW	CHKR	DE	DVR	DM	DATE	PE	DATE	WE	AR	CV	ST	HV	EM	FP	PD	EE	IE	M	NP
	0	ISSUED FOR CONSTRUCTION	RM	AF	HE		LE	06/2017														

REVISION OR ISSUE PURPOSE — REVISION APPROVALS — SQUAD CHECK

RPE: Teresa J. Pierce, P.E. — STATE OF TENNESSEE — 6/30/17

DRAWING APPROVALS		DATE
DRW	R MARKEN	06/16/17
CHKR	A FIRTH	06/16/17
DE	H ELLIOTT	06/16/17
DVR		
DM	L ELLIS	06/16/17
PE	Teresa J. Pierce, P.E.	

UCOR URS | CH2M Oak Ridge LLC

OF200 Mercury Treatment Facility

Designed by URS|CH2M Oak Ridge LLC (UCOR) for the Department of Energy
Oak Ridge Office of Environmental Management
under U. S. Government contract DE-SC-0004645

Y-12 National Security Complex managed and operated by Consolidated Nuclear Security, LLC for the Department of Energy under U.S. Government contract DE-NA0001942 • Oak Ridge, Tennessee •

PROJECT NAME:
OF200 MERCURY TREATMENT FACILITY
STRUCTURAL
STANDARD DETAILS - SHEET 7 OF 12

USE	DISC	DT	DC	CM	SYSTEM	STAT	SIZE	BLDG	FL	CLASS
3	S	DT	X	NC	FAC	AR	E	9410-02	S	U

SH.	OF	TYPE		PART	REV
7	12	DD	S941002-F-0051	000	0

ISSUED FOR CONSTRUCTION

662886

THIS DRAWING IS LOANED FOR SOLE USE OF THE INTENDED RECIPIENT AND ONLY FOR THE LIMITED PURPOSES FOR WHICH IT WAS PROVIDED. USE BY OTHER ENTITIES OR FOR OTHER PURPOSES IS PROHIBITED AND AT THE USER'S OWN RISK. DRAWINGS ARE TO BE RETURNED UPON REQUEST OF THE FORWARDING RECIPIENT.

6/22/2017 11:30:31 AM
S941002-F-0051.dgn