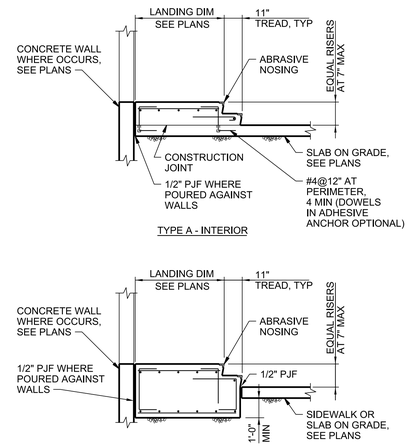

NOTE:

REINFORCE WITH #5 @12", UNLESS NOTED OTHERWISE.

CONCRETE STAIR - ON GRADE

NTS

0330-050

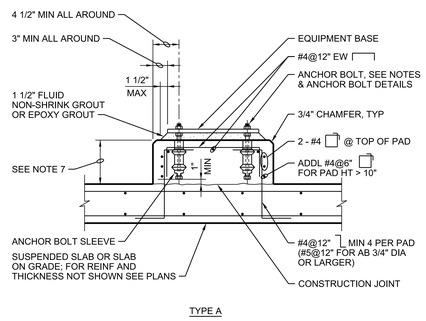

GENERAL NOTE:

FOR GENERAL NOTES SEE DETAIL 6 OF 6.

CONCRETE EQUIPMENT PAD - TYPE A

NTS

DETAIL 1 OF 6

0330-056

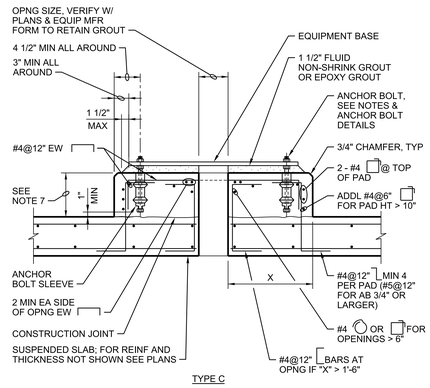

GENERAL NOTE:

FOR GENERAL NOTES SEE DETAIL 6 OF 6.

CONCRETE EQUIPMENT PAD - TYPE C

NTS

DETAIL 2 OF 6

0330-056

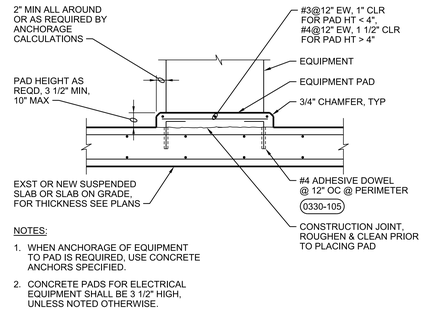

NOTES:

1. WHEN ANCHORAGE OF EQUIPMENT TO PAD IS REQUIRED, USE CONCRETE ANCHORS SPECIFIED.
2. CONCRETE PADS FOR ELECTRICAL EQUIPMENT SHALL BE 3 1/2" HIGH, UNLESS NOTED OTHERWISE.

TYPE E

GENERAL NOTE:

FOR GENERAL NOTES SEE DETAIL 6 OF 6.

CONCRETE EQUIPMENT PAD - TYPE E

NTS

DETAIL 3 OF 6

0330-056

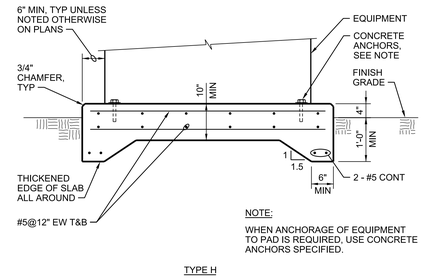

NOTE:

WHEN ANCHORAGE OF EQUIPMENT TO PAD IS REQUIRED, USE CONCRETE ANCHORS SPECIFIED.

TYPE H

GENERAL NOTE:

FOR GENERAL NOTES SEE DETAIL 6 OF 6.

CONCRETE EQUIPMENT PAD - TYPE H

NTS

DETAIL 4 OF 6

0330-056

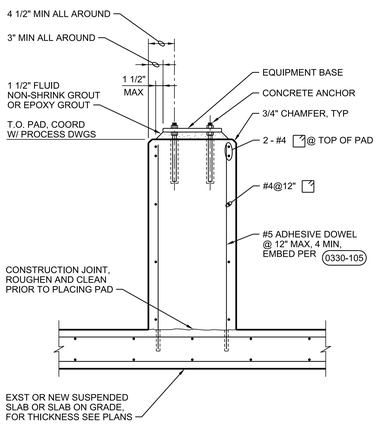

GENERAL NOTE:

FOR GENERAL NOTES SEE DETAIL 6 OF 6.

CONCRETE EQUIPMENT PAD - TYPE J

NTS

DETAIL 5 OF 6

0330-056

NOTES:

1. PAD SIZE SHALL BE MINIMUM INDICATED OR AS SHOWN ON THE PLANS OR AS INDICATED BY THE MANUFACTURER AND APPROVED BY THE ENGINEER.
2. THE SIZE, NUMBER, TYPE, LOCATION, AND THREAD PROJECTION OF THE ANCHOR BOLTS SHALL BE DETERMINED BY THE EQUIPMENT MANUFACTURER AND AS APPROVED BY THE ENGINEER. ANCHOR BOLTS SHALL BE HELD IN POSITION WITH A TEMPLATE OR OTHER ACCEPTABLE MEANS, MATCHING THE BASE PLATE, WHILE PAD IS BEING PLACED.
3. ANCHOR BOLT SLEEVES SHALL BE USED TO PROVIDE MINIMUM ANCHOR BOLT MOVEMENT OF 1/2" IN ALL HORIZONTAL DIRECTIONS. THE MINIMUM SLEEVE LENGTH SHALL BE 8 TIMES THE BOLT DIAMETER.
4. ANCHOR BOLT SLEEVES SHALL HAVE A MINIMUM INTERNAL DIAMETER 1" GREATER THAN BOLT DIAMETER AND A MAXIMUM INTERNAL DIAMETER 3" GREATER THAN ANCHOR BOLT DIAMETER. SLEEVES SHALL BE FILLED WITH NON-SHRINK GROUT AFTER BOLTS ARE ALIGNED. SEE 0330-057
5. EQUIPMENT BASES SHALL BE INSTALLED LEVEL UNLESS INDICATED OTHERWISE.
6. WEDGES, SHIMS, OR LEVELING NUTS SHALL BE USED TO SUPPORT THE BASE WHILE THE GROUT IS PLACED. WEDGES OR SHIMS SHALL BE REMOVED AFTER GROUT IS SET AND PACK VOID WITH GROUT.
7. HEIGHT OF PADS SHALL BE MINIMUM REQUIRED FOR ANCHOR BOLT CLEARANCE TO KEEP ANCHOR BOLT ABOVE SUPPORTING SLAB (SEE TABLE BELOW). WHERE EQUIPMENT OR PIPING ELEVATION REQUIRE A PAD HEIGHT LESS THAN THE MINIMUM SHOWN, USE TYPE "B" EQUIPMENT PAD WITH BLOCKOUT.
8. TYPE "D" PAD SHALL BE USED ONLY WHERE SPECIFICALLY INDICATED. PLACE THE SURROUNDING FLOOR SLAB AFTER THE EQUIPMENT PAD.
9. AT CONTRACTOR'S OPTION, CONCRETE ANCHORS MAY BE USED IN LIEU OF CAST-IN-PLACE ANCHOR BOLTS FOR EQUIPMENT ANCHOR BOLTS LESS THAN 3/4" DIAMETER WHEN APPROVED BY THE EQUIPMENT MANUFACTURER AND APPROVED BY THE ENGINEER. ANCHORS SHALL BE INSTALLED WITH 4" MINIMUM EDGE DISTANCE IN EACH DIRECTION.

AB DIA (IN.)	1/2	5/8	3/4	7/8	1	1 1/4	1 3/8	1 1/2	1 3/4	2
MIN PAD HT (IN.)	7	8 1/2	10	11	12 1/2	15	16 1/2	18	21	24

CONCRETE EQUIPMENT PAD - NOTES

NTS

DETAIL 6 OF 6

0330-056

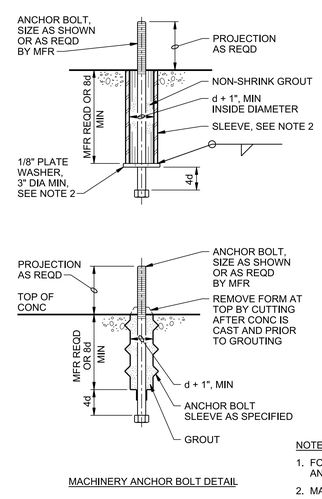

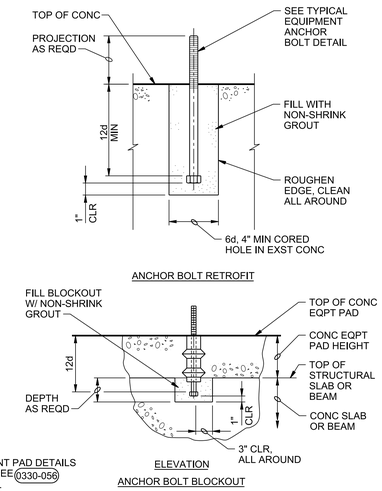

NOTES:

1. FOR CONCRETE EQUIPMENT PAD DETAILS AND NOTES NOT SHOWN SEE 0330-056
2. MATERIAL TO MATCH BOLT.

ANCHOR BOLT DETAILS

NTS

0330-057

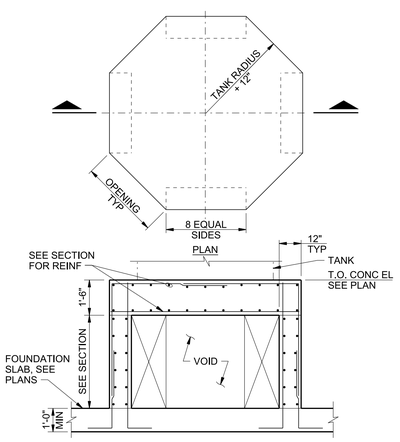

NOTES:

1. FOR CONCRETE EQUIPMENT PAD NOTES SEE 0330-056
2. FOR ANCHOR BOLTS SEE 0330-057

TYPE L

TANK PAD

NTS

0330-058

UCOR
URS | CH2M
Oak Ridge LLC

OF200 Mercury Treatment Facility

Designed by URS|CH2M Oak Ridge LLC (UCOR) for the Department of Energy
Oak Ridge Office of Environmental Management
under U. S. Government contract DE-SC-0004645

Y-12 National Security Complex managed and operated by Consolidated Nuclear Security, LLC for the Department of Energy under U.S. Government contract DE-NA0001942
« Oak Ridge, Tennessee »

DRW	R MARKEN	06/16/17
CHKR	A FIRTH	06/16/17
DE	H ELLIOTT	06/16/17
DVR		
DM	L ELLIS	06/16/17
PE	Teresa J. Pierce, P.E.	

RPE

PROJECT NAME:
OF200 MERCURY TREATMENT FACILITY
STRUCTURAL
STANDARD DETAILS - SHEET 4 OF 12

USE	DISC	DT	DC	CM	SYSTEM	STAT	SIZE	BLDG	FL	CLASS
3	S	DT	X	NC	FAC	AR	E	9410-02	S	U

SH.	OF	TYPE		PART	REV
4	12	DD	S941002-F-0048	000	0

662886

PART	REV	DESCRIPTION	DRW	CHKR	DE	DVR	DM	DATE
	0	ISSUED FOR CONSTRUCTION	RM	AF	HE		LE	06/2017

REVISION OR ISSUE PURPOSE — REVISION APPROVALS — SQUAD CHECK: WE AR CV ST HV EM FP PD EE IE M NP

DRAWING APPROVALS — REV. DATE — DATE

ISSUED FOR CONSTRUCTION

THIS DRAWING IS LOANED FOR SOLE USE OF THE INTENDED RECIPIENT AND ONLY FOR THE LIMITED PURPOSES FOR WHICH IT WAS PROVIDED. USE BY OTHER ENTITIES OR FOR OTHER PURPOSES IS PROHIBITED AND AT THE USER'S OWN RISK. DRAWINGS ARE TO BE RETURNED UPON REQUEST OF THE FORWARDING RECIPIENT.

6/22/2017 11:26:45 AM
S941002-F-0048.dgn