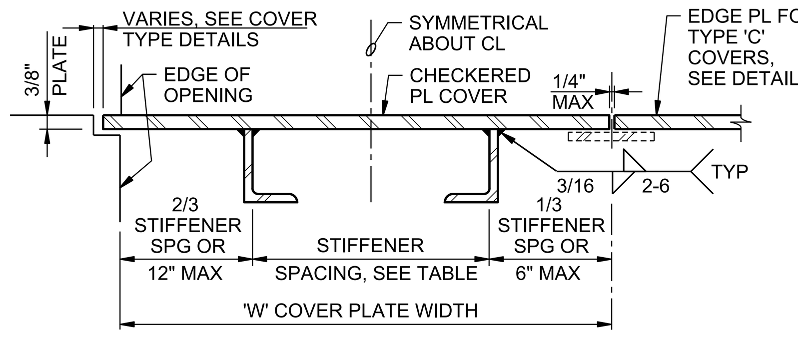

TABLE			
OPENING SPAN LENGTH 'L'	STIFFENER SIZE	MAX STIFFENER SPACING	MAX PLATE WIDTH 'W'
L<2'-6"	NONE	-	5'-0"
2'-6"<L<3'-6"	L2x1 1/2x1/4	1'-6"	4'-0"
3'-6"<L<4'-0"	L2 1/2x1 1/2x1/4	1'-6"	4'-0"
4'-0"<L<4'-6"	L2 1/2x1 1/2x1/4	1'-3"	4'-0"
4'-6"<L<5'-0"	L3x2x1/4	1'-6"	4'-0"
5'-0"<L<5'-6"	L3x2x1/4	1'-3"	3'-0"
5'-6"<L<6'-0"	L3 1/2x2 1/2x1/4	1'-6"	3'-0"
6'-0"<L<6'-6"	L3 1/2x2 1/2x1/4	1'-3"	2'-6"
6'-6"<L<7'-0"	L4x3x1/4	1'-3"	2'-6"
7'-0"<L<7'-6"	L4x3x1/4	1'-0"	2'-0"

NOTES:
1. STIFFENERS TO BE PLACED LONG LEG VERTICAL.
2. SPAN DIRECTION OF PLATE TO BE PARALLEL TO STIFFENERS, AND SHALL BE SHORT DIMENSION OF OPENING UNLESS NOTED OTHERWISE ON PLANS.
3. MAXIMUM ALLOWABLE UNIFORM DESIGN LOAD = 300psf.
4. MAXIMUM WEIGHT OF COVER PLATE TO BE 125 POUNDS.
5. COVER PLATES AND STIFFENERS ARE ALUMINUM PLATES AND ANGLES.
6. ALL COVER PLATES TO HAVE A MINIMUM OF TWO EYES AS SHOWN IN LIFTING EYE DETAILS.

COVER STIFFENERS

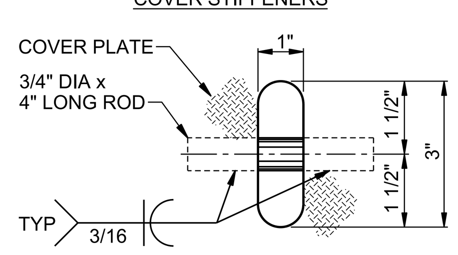

NOTE:
THIS DETAIL IS APPLICABLE TO TYPES "A" AND "B" COVERS AND OTHER COVERS NOT INTENDED TO BE AIRTIGHT.

LIFTING EYE TYPE "A"

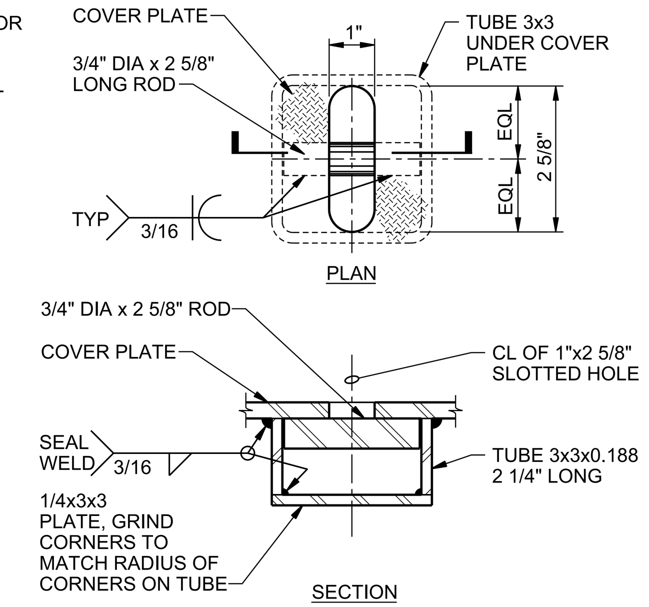

NOTE:
THE DETAIL IS APPLICABLE TO TYPE "C" COVERS AND OTHER AIR TIGHT COVERS.

LIFTING EYE TYPE "B"

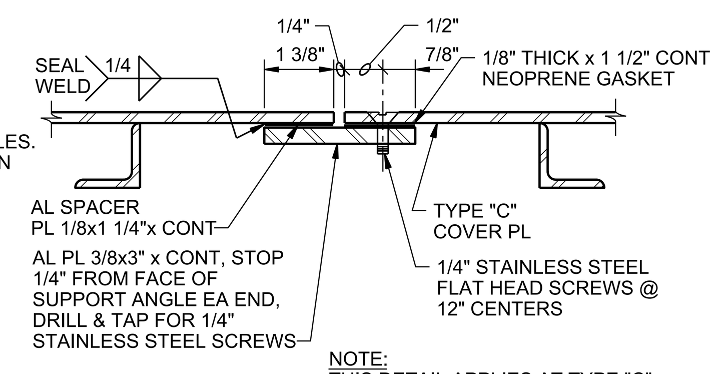

NOTE:
THIS DETAIL APPLIES AT TYPE "C" COVERS AND OTHER AIRTIGHT COVERS.

EDGE PLATE DETAIL

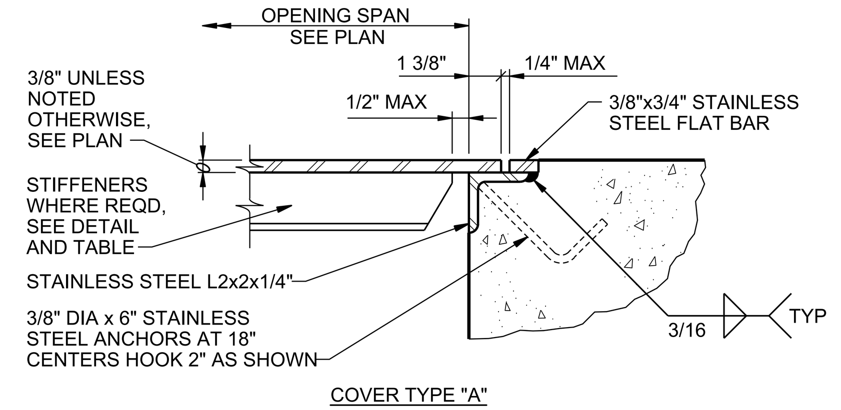

COVER TYPE "A"

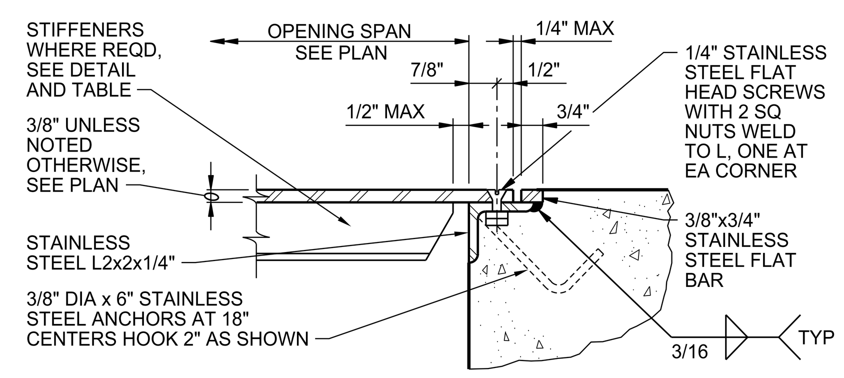

COVER TYPE "B"

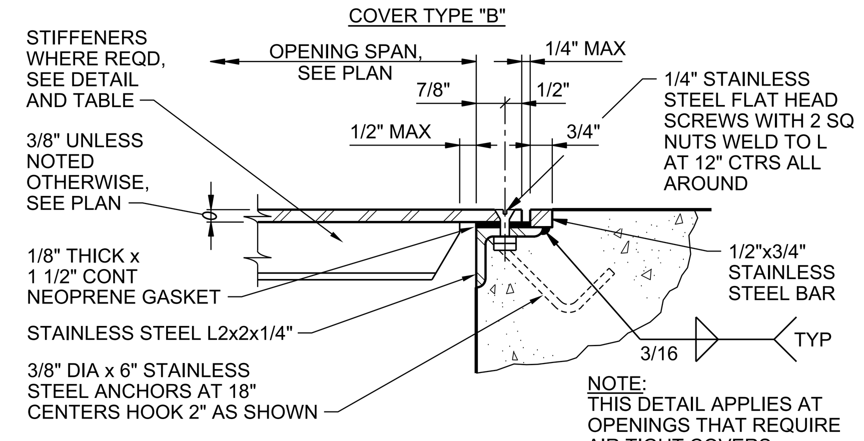

NOTE:
THIS DETAIL APPLIES AT OPENINGS THAT REQUIRE AIR TIGHT COVERS.

COVER TYPE "C"

CHECKERED FLOOR PLATE - ALUMINUM

NTS

0554-001

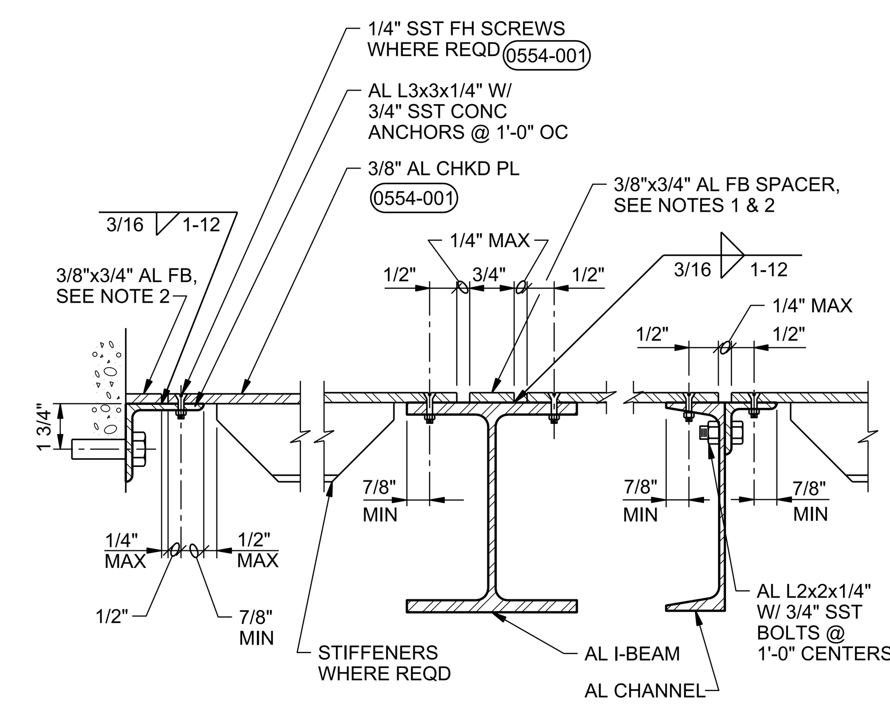

NOTES:
1. PROVIDE AL FB 3/8" AT CL SUPPORT WHERE FLANGE WIDTH (OR FLANGE PLUS ANGLE) EXCEEDS 4".
2. TYPE "B" COVER SHOWN. DETAIL SIMILAR FOR TYPE "A" COVER. PROVIDE 1/2" THICK FLAT BAR SPACERS FOR TYPE "C" COVER.

FLOOR PLATE SUPPORT FRAMING

NTS

0554-002

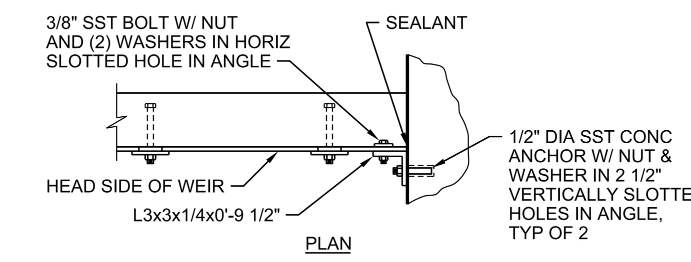

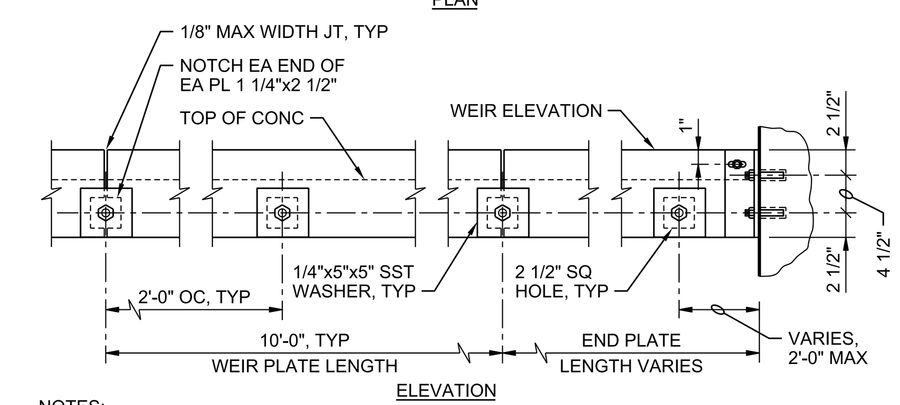

NOTES:
1. ALL PARTS SHALL BE SST AS SPECIFIED.
2. ALL FASTENERS SHALL BE SST AS SPECIFIED.
3. STEEL TROWEL TOP OF CONCRETE WALL TO OBTAIN SMOOTH, DENSE FINISH.
4. PROVIDE CONTINUOUS SEALANT BETWEEN WEIR PLATE AND CONCRETE WALL AND BETWEEN END OF WEIR PLATE AND CONCRETE WALL.
5. CORNERS ON TOP EDGE OF WEIR PLATE SHALL BE GROUND SMOOTH.

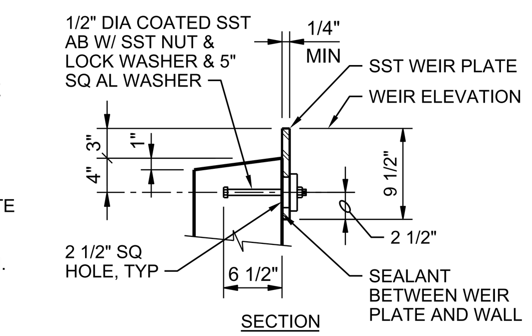

STRAIGHT EDGE WEIR

NTS SST

0559-031

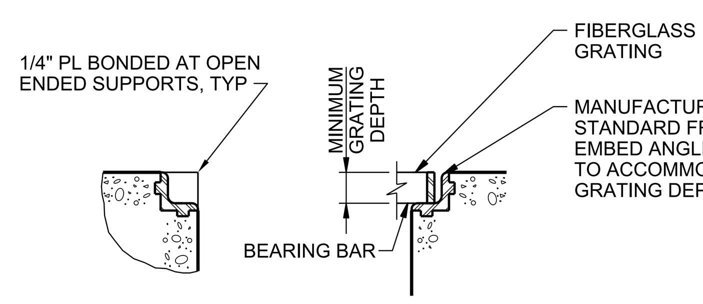

GS-1

GENERAL NOTES:
1. EXTEND GRATING CONTINUOUSLY OVER GATE GUIDES AND GATES.
2. NOTCH GRATING SUPPORTS AT GATES AS REQUIRED.
3. GRATING SPAN ←→ SEE PLAN.
4. WIDTH OF GRATING SECTIONS SHALL NOT EXCEED 3'-0".
5. SHOP DRAWINGS BASED ON FIELD DIMENSIONS SHALL BE SUBMITTED TO THE ENGINEER PRIOR TO FABRICATION.
6. UNLESS NOTED OTHERWISE ON PLANS, MINIMUM GRATING THICKNESS SHALL BE AS TABULATED IN TABLE BELOW
7. DESIGN LL = 100 PSF
8. PROVIDE SST GRATING FASTENERS AS REQUIRED.
9. THE HORIZONTAL CLEARANCE BETWEEN THE GRATING AND GRATING SUPPORTS SHALL NOT BE LESS THAN 1/4" NOR GREATER THAN 1/2".
10. ALL GRATING SECTIONS, WHEN IN PLACE, SHALL ALWAYS BE FIRMLY ANCHORED TO THEIR SUPPORTS.
11. PROVIDE MINIMUM X" BEARING FOR ALL FIBERGLASS GRATING.

FOOT TRAFFIC		
MAXIMUM SPAN	MINIMUM GRATING DEPTH	* GRATING TYPE
3'-6"	1 1/2"	M OR P
4'-0"	1 1/2"	M OR P
4'-6"	1 1/2"	M OR P
5'-0"	2"	P
5'-6"	2"	P

* M = MOLDED GRATING
P = PULTRUDED GRATING

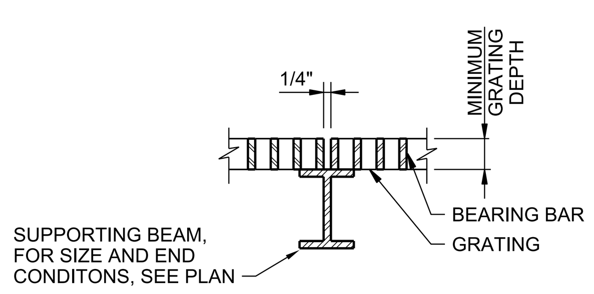

GS-2 - TWO SIDED

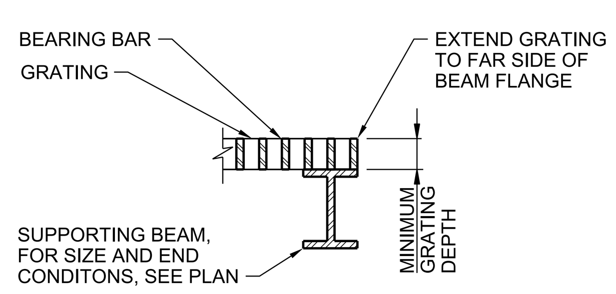

GS-2 - ONE SIDED

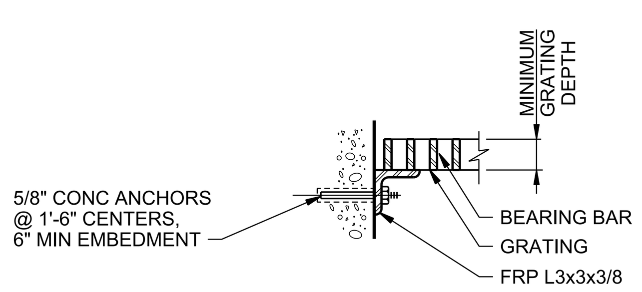

GS-3

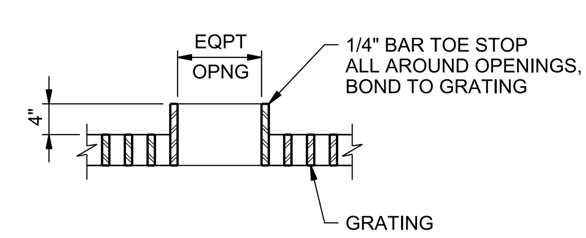

EQUIPMENT OPENINGS

STANDARD FIBERGLASS GRATING

NTS

0682-030

THIS DRAWING IS LOANED FOR SOLE USE OF THE INTENDED RECIPIENT AND ONLY FOR THE LIMITED PURPOSES FOR WHICH IT WAS PROVIDED. USE BY OTHER ENTITIES OR FOR OTHER PURPOSES IS PROHIBITED AND AT THE USER'S OWN RISK. DRAWINGS ARE TO BE RETURNED UPON REQUEST OF THE FORWARDING RECIPIENT.

PART	REV	DESCRIPTION	DRW	CHKR	DE	DVR	DM	DATE
	Ø	ISSUED FOR CONSTRUCTION	RM	AF	HE		LE	06/2017

REVISION OR ISSUE PURPOSE — REVISION APPROVALS (PE, DATE) — SQUAD CHECK (WE, AR, CV, ST, HV, EM, FP, PD, EE, IE, M, NP) — DRAWING APPROVALS (REV., DATE)

RPE

DRW	R MARKEN	06/16/17
CHKR	A FIRTH	12/16/16
DE	H ELLIOTT	06/16/17
DVR		
DM	L ELLIS	06/16/17
PE	Teresa J. Pierce, P.E.	

OF200 Mercury Treatment Facility
UCOR URS | CH2M Oak Ridge LLC
Designed by URS|CH2M Oak Ridge LLC (UCOR) for the Department of Energy
Oak Ridge Office of Environmental Management
under U. S. Government contract DE-SC-0004645
Y-12 National Security Complex managed and operated by Consolidated Nuclear Security, LLC for the Department of Energy under U.S. Government contract DE-NA0001942
Oak Ridge, Tennessee

PROJECT NAME:
OF200 MERCURY TREATMENT FACILITY

STRUCTURAL
STANDARD DETAILS - SHEET 12 OF 12

USE	DISC	DT	DC	CM	SYSTEM	STAT	SIZE	BLDG	FL	CLASS
3	S	DT	X	NC	FAC	AR	E	9410-02	S	U

SH.	OF	TYPE	DRAWING NO.	PART	REV
12	12	DD	S941002-F-0056	000	0

662886

ISSUED FOR CONSTRUCTION