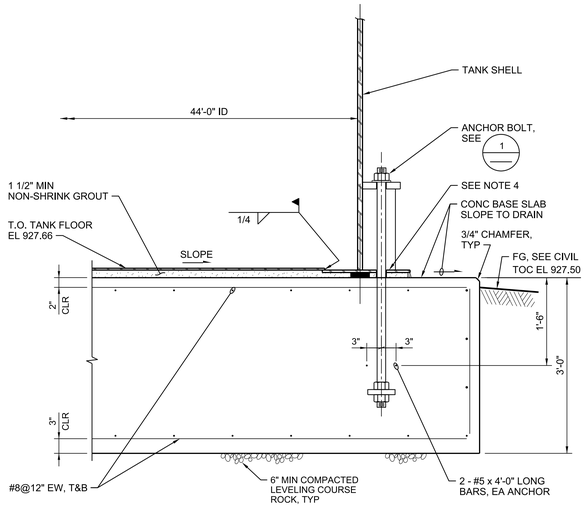

NOTES:
1. CONTRACTOR SHALL MAINTAIN TRUE SURFACE FOR TANK TO BEAR ON AT TOP OF FOOTING.
2. STAGGER REINFORCING SPLICES AT BASE SLAB CONSTRUCTION JOINTS ONE FULL LAP LENGTH.
3. BOTTOM PLATES SHALL EXTEND 2" BEYOND TANK SHELL PER AWWA SECTION 14.
4. PROVIDE A PLYWOOD TEMPLATE, DRILLED TO MATCH ANCHOR BOLT LOCATIONS , AND SECURE TO FORMWORK PRIOR TO PLACING CONCRETE .

SECTION

A CONCRETE BASE SLAB
1"=1'-0"
S941002-F-0043

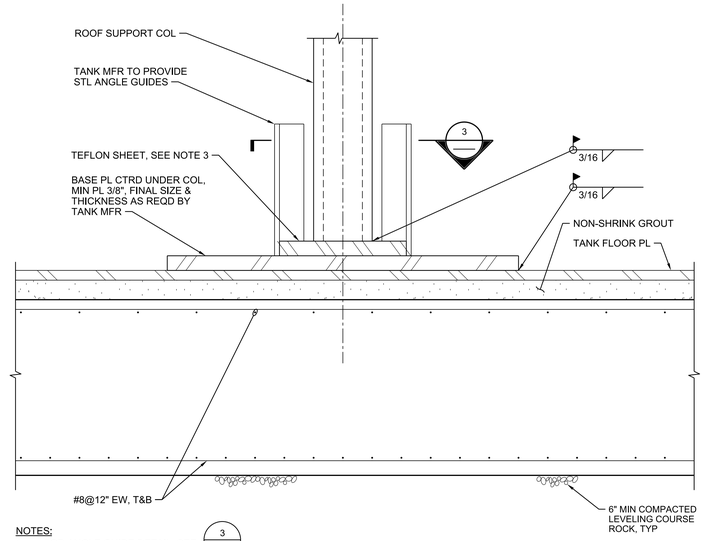

NOTES:
1. FOR ANGLE GUIDE DETAIL, SEE 3 .
2. FOR COATING, SEE SPECIFICATIONS.
3. TEFLON SHEET UNDER COLUMN BASE PER TANK MANUFACTURER. COAT ALL STEEL SURFACES PRIOR TO SETTING COLUMN.

SECTION

2 EQUALIZATION TANK COLUMN DETAIL
1"=1'-0"
S941002-F-0043

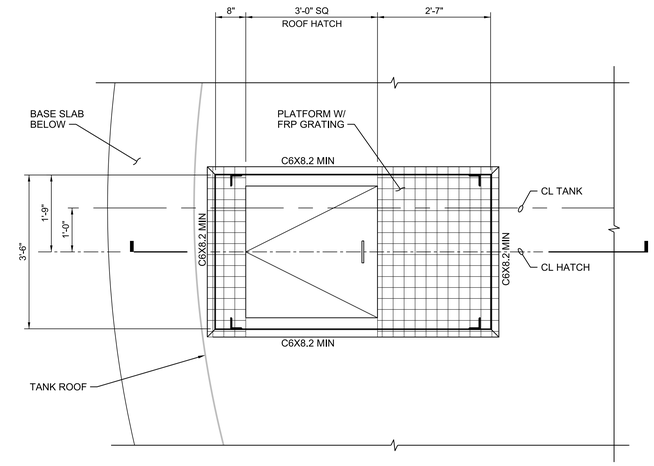

N

PARTIAL PLAN
3/4"=1'-0"

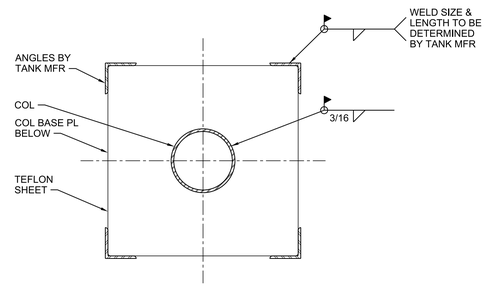

NOTES:
1. DO NOT WELD COLUMN BASE PLATE TO FLOOR PLATE OR ANGLE GUIDE.

SECTION

3 ANGLE GUIDE DETAIL
1 1/2"=1'-0"

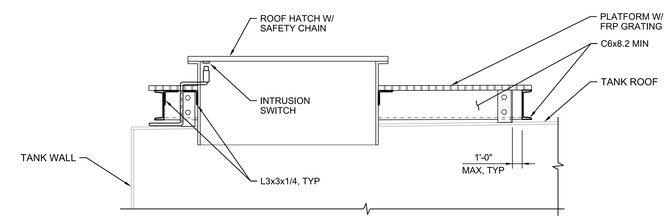

SECTION
1"=1'-0"

5 ROOF HATCH DETAIL
AS SHOWN
S941002-F-0043

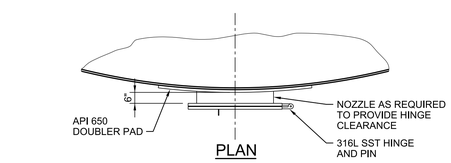

PLAN

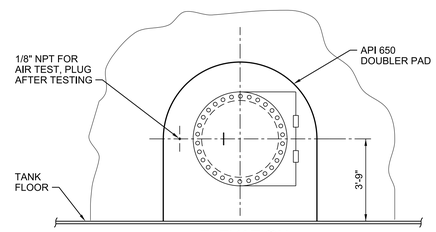

ELEVATION

NOTES:
1. GENERAL ARRANGEMENT ONLY, SHELL MANWAYS AND DOUBLER PAD TO BE DESIGNED BY TANK MANUFACTURER.
2. MANWAY AND OPENING REINFORCING TO COMPLY WITH API 650, FIGURE 5-7A.

4 MANWAY DETAIL
3/8"=1'-0"
S941002-F-0043

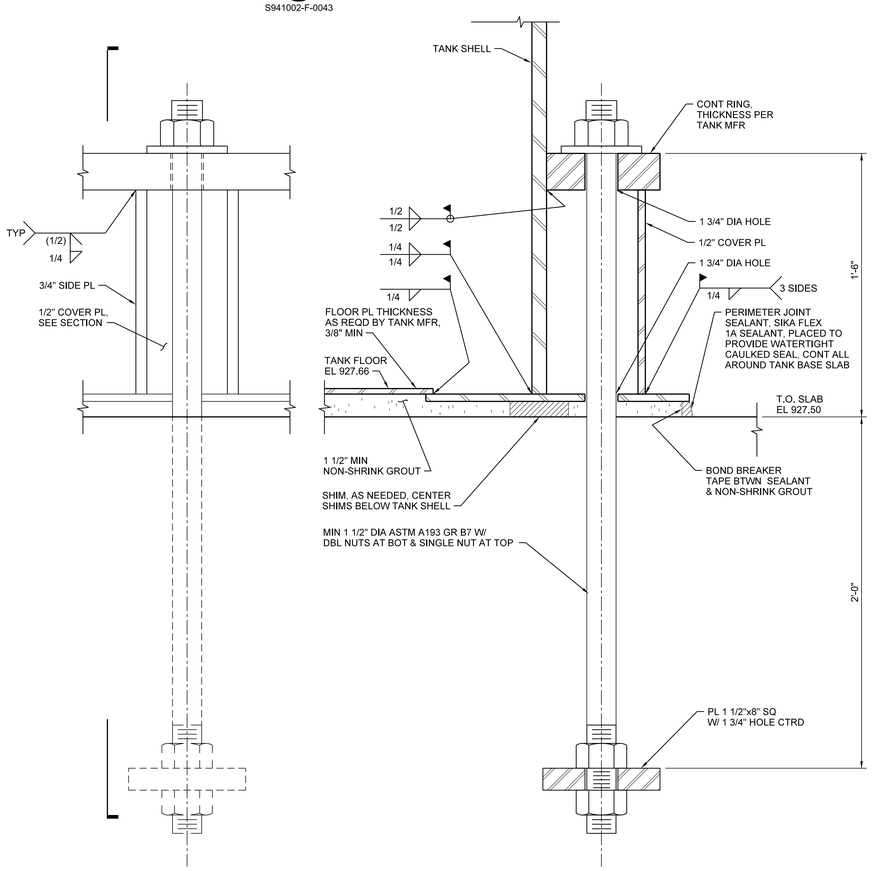

ELEVATION SECTION

1 ANCHOR BOLT AND ANCHOR CHAIR DETAILS
3"=1'-0"

PART	REV	DESCRIPTION	DRW	CHKR	DE	DVR	DM	DATE	PE	DATE
	0	ISSUED FOR CONSTRUCTION	ILT	AF	TT		LE	06/2017		

REVISION OR ISSUE PURPOSE — REVISION APPROVALS

SQUAD CHECK: WE AR CV ST HV EM FP PD EE IE M NP

REV. DATE — DRAWING APPROVALS — DATE

RPE: STATE OF TENNESSEE, TERESA J. PIERCE, 6/30/17

DRW	I LAPINA-TRAUT	06/16/17
CHKR	A FIRTH	06/16/17
DE	T TOVEY	06/16/17
DVR		
DM	L ELLIS	06/16/17
PE	Teresa J. Pierce, P.E.	

UCOR URS | CH2M Oak Ridge LLC

OF200 Mercury Treatment Facility
Designed by URS|CH2M Oak Ridge LLC (UCOR) for the Department of Energy
Oak Ridge Office of Environmental Management
under U. S. Government contract DE-SC-0004645

Y-12 National Security Complex managed and operated by Consolidated Nuclear Security, LLC for the Department of Energy under U.S. Government contract DE-NA0001942 • Oak Ridge, Tennessee •

PROJECT NAME: OF200 MERCURY TREATMENT FACILITY

STRUCTURAL
TREATMENT FACILITY
TANK - SECTION AND DETAILS

USE	DISC	DT	DC	CM	SYSTEM	STAT	SIZE	BLDG	FL	CLASS
3	S	P	B	NC	FAC	AR	E	9410-02	P	U

SH.	OF	TYPE		PART	REV
1	1	DD	S941002-F-0044	000	0

662886

ISSUED FOR CONSTRUCTION

THIS DRAWING IS LOANED FOR SOLE USE OF THE INTENDED RECIPIENT AND ONLY FOR THE LIMITED PURPOSES FOR WHICH IT WAS PROVIDED. USE BY OTHER ENTITIES OR FOR OTHER PURPOSES IS PROHIBITED AND AT THE USER'S OWN RISK. DRAWINGS ARE TO BE RETURNED UPON REQUEST OF THE FORWARDING RECIPIENT.