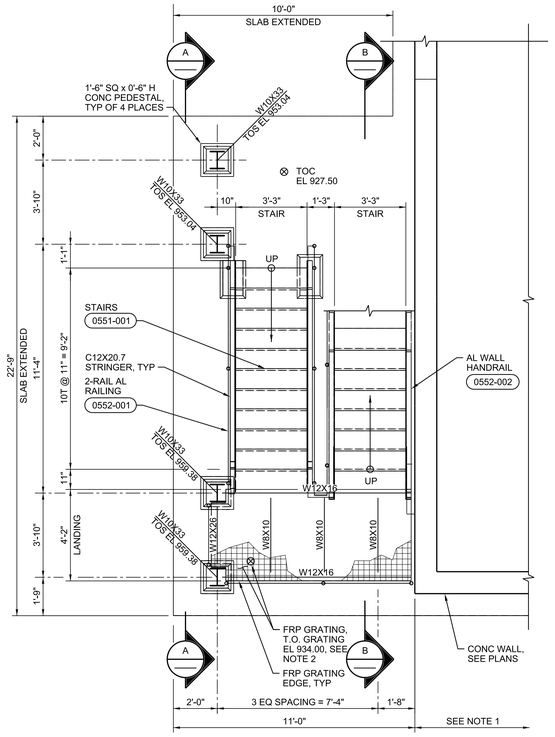

PLAN AT GROUND LEVEL

3/8"=1'-0"

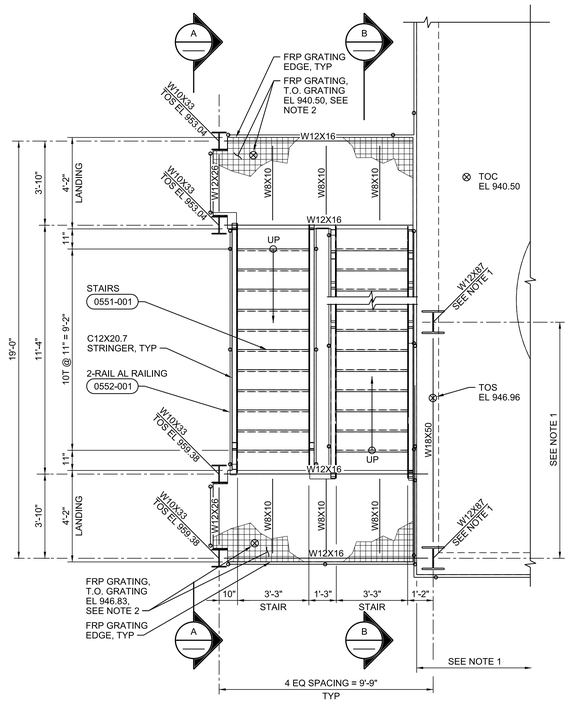

PLAN AT TANK PLATFORM

3/8"=1'-0"

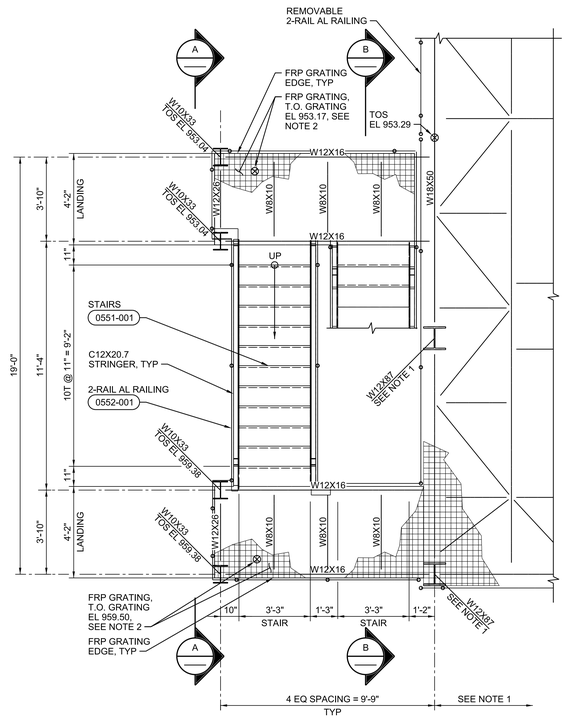

PLAN AT TOP PLATFORM

3/8"=1'-0"

NOTES:

1. FOR INFORMATION NOT SHOWN SEE AREA B PLAN DRAWINGS.
2. ALL FRP GRATING, PLATFORMS AND STAIR TREADS TO BE FIBERGRATE MOLDED V/I-CORR, 1 1/2" DEEP X 1 1/2" SQUARE MESH, GRIT TOP SURFACE, DARK GREY. OTHER FRP GRATING PRODUCTS MAY BE SUBSTITUTED IF THEY HAVE THE SAME, OR HIGHER, STRENGTH AND DEFLECTION CHARACTERISTICS IN A 1 1/2" THICK GRATING.

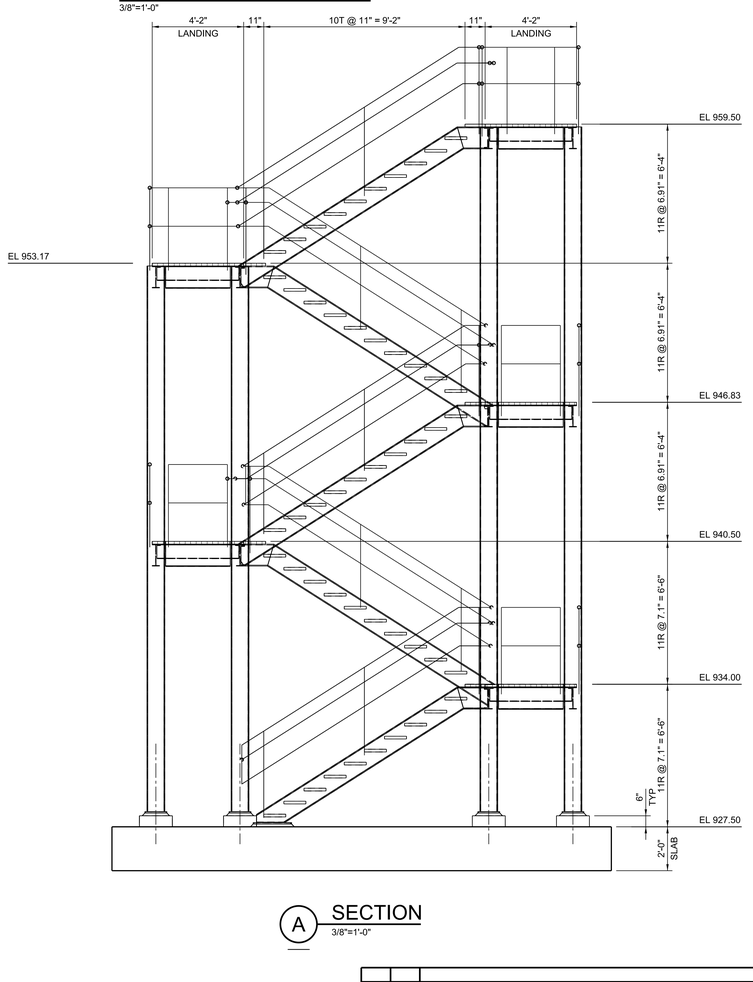

A SECTION

3/8"=1'-0"

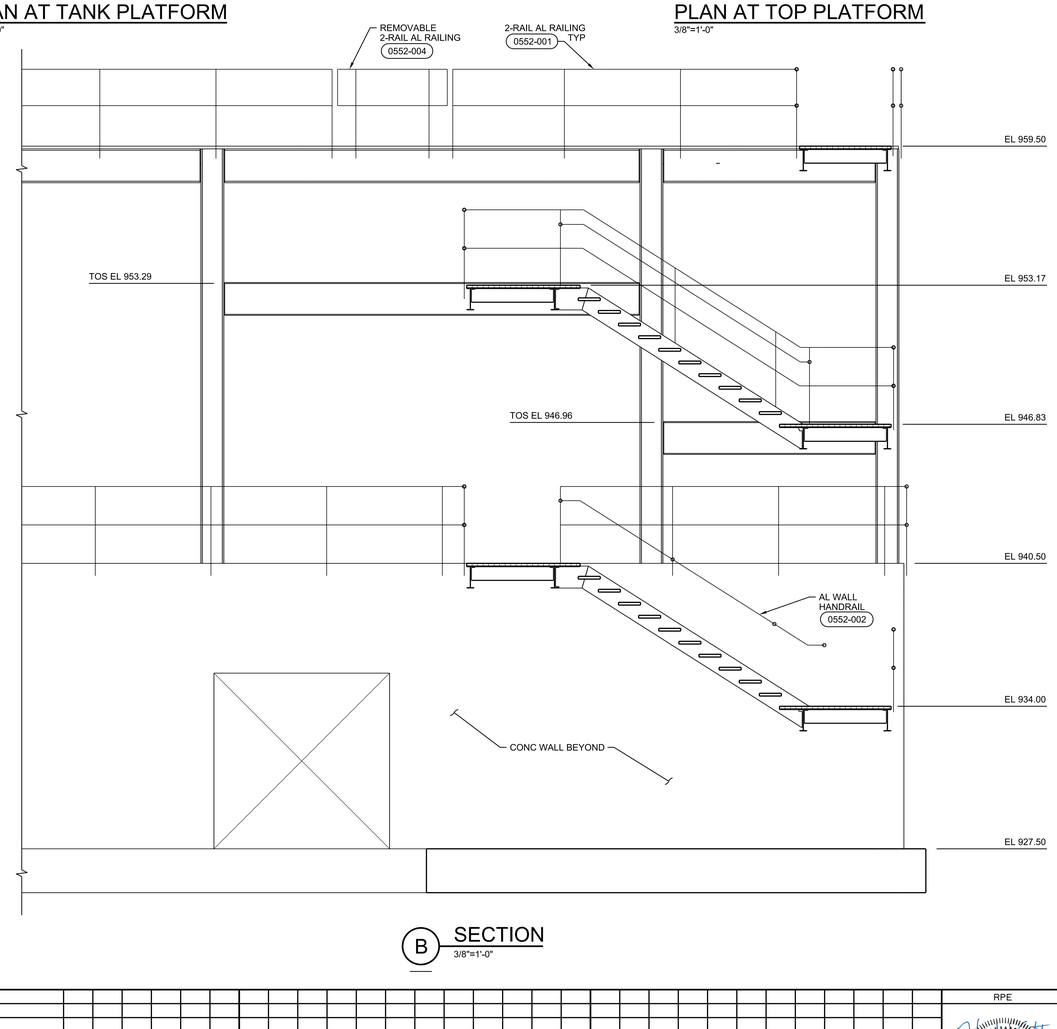

B SECTION

3/8"=1'-0"

THIS DRAWING IS LOANED FOR SOLE USE OF THE INTENDED RECIPIENT AND ONLY FOR THE LIMITED PURPOSES FOR WHICH IT WAS PROVIDED. USE BY OTHER ENTITIES OR FOR OTHER PURPOSES IS PROHIBITED AND AT THE USER'S OWN RISK. DRAWINGS ARE TO BE RETURNED UPON REQUEST OF THE FORWARDING RECIPIENT.

PART	REV	DESCRIPTION	DRW	CHKR	DE	DVR	DM	DATE	PE	DATE	WE	AR	CV	ST	HV	EM	FP	PD	EE	IE	M	NP
	Ø	ISSUED FOR CONSTRUCTION	ILT	AF	HE		LE	06/2017														

REVISION OR ISSUE PURPOSE — REVISION APPROVALS — SQUAD CHECK

RPE: TERESA J. PIERCE, P.E. — STATE OF TENNESSEE — 6/30/17

REV.	DATE

DRAWING APPROVALS

		DATE
DRW	I LAPINA-TRAUT	06/16/17
CHKR	A FIRTH	06/16/17
DE	H ELLIOTT	06/16/17
DVR		
DM	L ELLIS	06/16/17
PE	Teresa J. Pierce, P.E.	

UCOR URS | CH2M Oak Ridge LLC

OF200 Mercury Treatment Facility

Designed by URS|CH2M Oak Ridge LLC (UCOR) for the Department of Energy
Oak Ridge Office of Environmental Management
under U. S. Government contract DE-SC-0004645

Y-12 National Security Complex managed and operated by Consolidated Nuclear Security, LLC for the Department of Energy under U.S. Government contract DE-NA0001942
« Oak Ridge, Tennessee »

PROJECT NAME:
OF200 MERCURY TREATMENT FACILITY

STRUCTURAL
TREATMENT FACILITY
STAIR TOWER PLANS & SECTIONS

USE	DISC	DT	DC	CM	SYSTEM	STAT	SIZE	BLDG	FL	CLASS
3	S	P	B	NC	FAC	AR	E	9410-02	P	U

SH.	OF	TYPE		PART	REV
1	1	DD	S941002-F-0033	000	0

662886

ISSUED FOR CONSTRUCTION

6/22/2017 11:28:50 AM