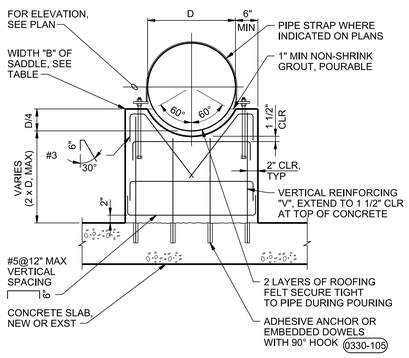

TYPE "A" SADDLE

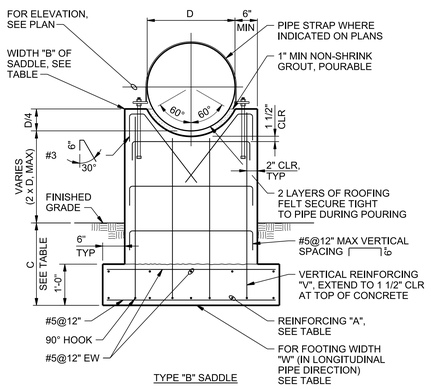

TYPE "B" SADDLE

PIPE SUPPORT - CONCRETE SADDLE

NTS

DETAIL 1 OF 2

0330-061

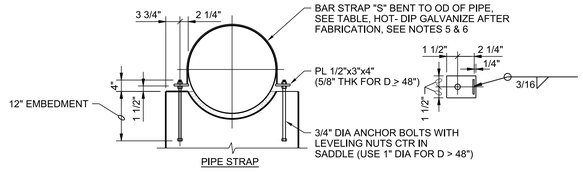

PIPE STRAP

PIPE SADDLE TABLE								
PIPE DIAMETER D	SADDLE WIDTH B	LAYERS OF REINFORCING	VERTICAL REINFORCING V	PIPE STRAP SIZE S	NO. OF STRAPS	FOOTING WIDTH W	REINFORCING A	FOOTING DEPTH C
D<12"	6"	1 (CTRD)	#5@12"	3/16"x2"	1	1'-6"	#5@12"	2'-0"
12"<D<24"	8"	1 (CTRD)	#5@12"	3/16"x2 1/2"	1	2'-0"	#5@12"	2'-0"
24"<D<36"	10"	2 (EF)	#5@12"	1/4"x2"	1	3'-0"	#5@12"	2'-0"
36"<D<48"	12"	2 (EF)	#5@12"	1/4"x3"	1	4'-0"	#5@12"	2'-0"
48"<D<60"	16"	2 (EF)	#6@12"	3/8"x3"	2	6'-0"	#5@6"	2'-0"
60"<D<72"	18"	2 (EF)	#6@12"	3/8"x3"	2	8'-0"	#5@6"	2'-0"

NOTES:

1. FOR "B"=10" OR THICKER, USE 2 LAYERS OF REINFORCING, TURN HORIZONTAL BARS 90° TO HOOK AROUND VERTICALS [ ] , 1 1/2" CLEAR OF CONCRETE
2. FORM 3/4" BEVEL ON ALL EXPOSED CORNERS OF SUPPORT.
3. USE TYPE 'A' SADDLE IN ALL LOCATIONS WHERE A SLAB (NEW OR EXISTING) OCCURS. USE TYPE 'B' IN OTHER LOCATIONS.
4. FOR LOCATIONS WHERE PIPE STRAP IS REQUIRED, SEE DRAWINGS. UNLESS INDICATED OTHERWISE A STRAP IS NOT REQUIRED.
5. AT SUBMERGED CONDITIONS, STRAP SHALL BE STAINLESS STEEL.
6. PROVIDE 3/4" BY STRAP WIDTH PLUS 1" WIDE NEOPRENE PAD BELOW STRAP.

PIPE SUPPORT - CONCRETE SADDLE

NTS

DETAIL 2 OF 2

0330-061

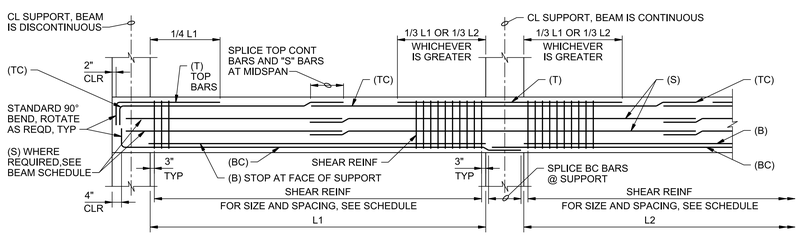

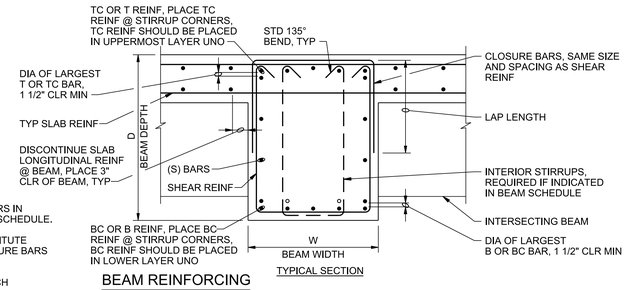

TYPICAL SECTION

NOTES:

1. PLACE TOP (T & TC) AND BOTTOM (B & BC) BARS IN MULTIPLE ROWS ONLY WHERE INDICATED IN SCHEDULE.
2. WHEN INDICATED IN BEAM SCHEDULE, SUBSTITUTE CLOSED TIES ( ) FOR STIRRUPS AND CLOSURE BARS SHOWN ( ).
3. PROVIDE MINIMUM 1 - #5 CONTINUOUS AT EACH CORNER OF STIRRUPS.

BEAM REINFORCING

NTS

0330-066

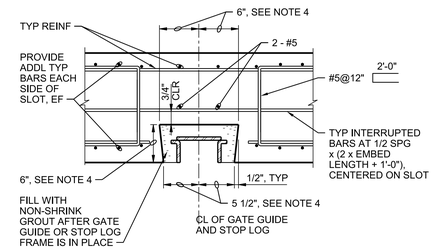

PLAN

(BASE SLAB SECTION SIMILAR)

FLUSH BLOCKOUT

NOTES:

1. FLUSH BLOCKOUT TYPICAL UNLESS OTHERWISE NOTED OR SHOWN ON PLANS.
2. REINFORCEMENT DETAILS ARE FOR BLOCKOUT AT STRAIGHT RUN WALL. MODIFY TO FIT CONDITIONS OF WALL SHOWN ON PLANS.
3. WALL BLOCKOUT SHOWN. BLOCKOUT CONTINUES THROUGH CHANNEL BASE SLAB. REINFORCE BASE SLAB SIMILARLY.

BLOCKOUT FOR STOP LOG OR GATE GUIDE

NTS

0330-076

THIS DRAWING IS LOANED FOR SOLE USE OF THE INTENDED RECIPIENT AND ONLY FOR THE LIMITED PURPOSES FOR WHICH IT WAS PROVIDED. USE BY OTHER ENTITIES OR FOR OTHER PURPOSES IS PROHIBITED AND AT THE USER'S OWN RISK. DRAWINGS ARE TO BE RETURNED UPON REQUEST OF THE FORWARDING RECIPIENT.

PART	REV	DESCRIPTION	DRW	CHKR	DE	DVR	DM	DATE
	0	ISSUED FOR CONSTRUCTION	RM	AF	HE		LE	06/2017

REVISION OR ISSUE PURPOSE — REVISION APPROVALS — SQUAD CHECK: WE AR CV ST HV EM FP PD EE IE M NP

REV.	DATE	DRAWING APPROVALS		DATE
		DRW	R MARKEN	06/16/17
		CHKR	A FIRTH	06/16/17
		DE	H ELLIOTT	06/16/17
		DVR		
		DM	L ELLIS	06/16/17
		PE	Teresa J. Pierce, P.E.	

RPE: TENNESSEE, STATE OF TENNESSEE, 6/30/17

UCOR URS | CH2M Oak Ridge LLC

OF200 Mercury Treatment Facility

Designed by URS|CH2M Oak Ridge LLC (UCOR) for the Department of Energy Oak Ridge Office of Environmental Management under U. S. Government contract DE-SC-0004645

Y-12 National Security Complex managed and operated by Consolidated Nuclear Security, LLC for the Department of Energy under U.S. Government contract DE-NA0001942 • Oak Ridge, Tennessee •

PROJECT NAME: OF200 MERCURY TREATMENT FACILITY

STRUCTURAL

STANDARD DETAILS - SHEET 5 OF 12

USE	DISC	DT	DC	CM	SYSTEM	STAT	SIZE	BLDG	FL	CLASS
3	S	DT	X	NC	FAC	AR	E	9410-02	S	U

SH.	OF	TYPE		PART	REV
5	12	DD	S941002-F-0049	000	0

ISSUED FOR CONSTRUCTION

662886

6/26/2017 1:59:48 PM S941002-F-0049.dgn