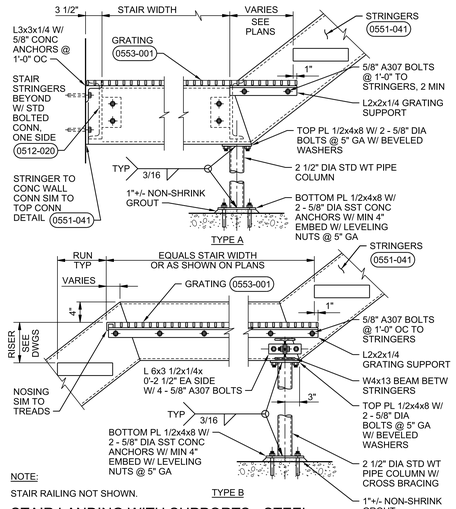

NOTE:

STAIR RAILING NOT SHOWN.

STAIR LANDING WITH SUPPORTS - STEEL

NTS

DETAIL 1 OF 3

0551-042

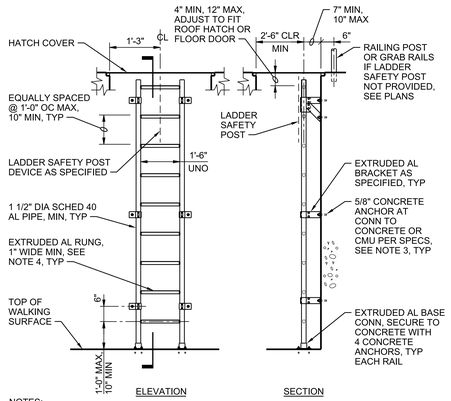

NOTES:

1. PROVIDE PROTECTION FOR ALUMINUM IN CONTACT WITH CONCRETE AS SPECIFIED.
2. PROVIDE LADDER SAFETY POST AS SPECIFIED, WHERE INDICATED.
3. PROVIDE SST CONC ANCHORS WHEN LOCATED BELOW MAXIMUM WATER SURFACE.
4. PROVIDE CORRUGATED, KNURLED OR DIMPLED SURFACE ON TOP OF RUNG.

PRE-ENGINEERED PIPE LADDER UNDER COVER TYPE "D" - ALUMINUM

NTS (20 FT MAX LADDER HEIGHT)

0551-101

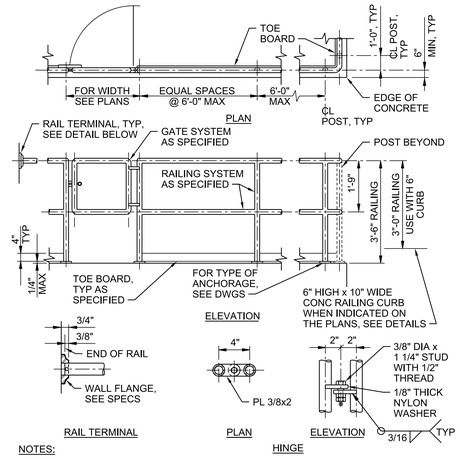

NOTES:

1. FASTEN RAIL TO WALL FLANGE PER MANUFACTURER'S RECOMMENDATIONS.
2. WALL FLANGE TO BE MOUNTED TO WALL WITH (2) 3/8" DIA SST WEDGE ANCHORS.
3. AT CONTRACTOR'S OPTION FABRICATE HINGES OR PROVIDE OTHER HINGES AS SPECIFIED. ANODIZE FINISH AFTER ALL WELDING AS SPECIFIED.

RAILING - 2 RAIL - ALUMINUM

NTS

DETAIL 1 OF 3

0552-001

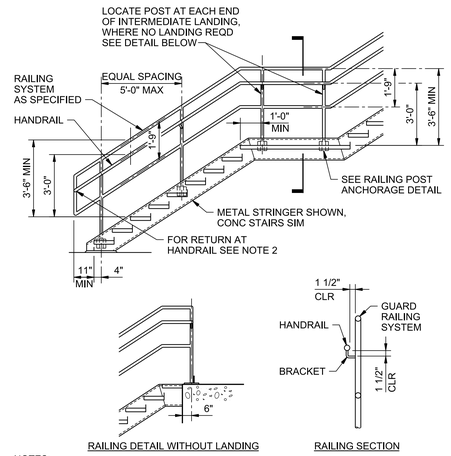

NOTES:

1. PROVIDE TOE BOARD AT LANDING WHERE REQUIRED.
2. RETURN ENDS OF HANDRAIL TO GUARD AT BOTH ENDS.

RAILING - 2 RAIL STAIR - ALUMINUM (IBC)

NTS

DETAIL 2 OF 3

0552-001

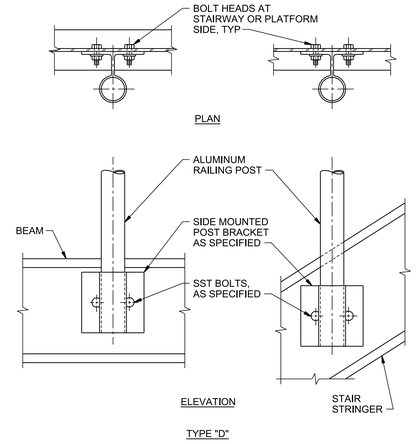

NOTE:

PROVIDE PROTECTION FOR DISSIMILAR METALS AND CONCRETE PER SPECIFICATIONS.

RAILING POST ANCHORAGE TYPE D - ALUMINUM

NTS

DETAIL 3 OF 3

0552-001

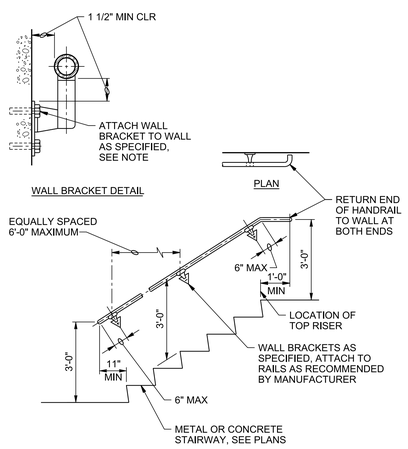

NOTE:

FOR ANCHORAGE TO WOOD OR METAL STUD FRAMING PROVIDE SOLID BLOCKING.

WALL HANDRAIL - ALUMINUM

NTS

0552-002

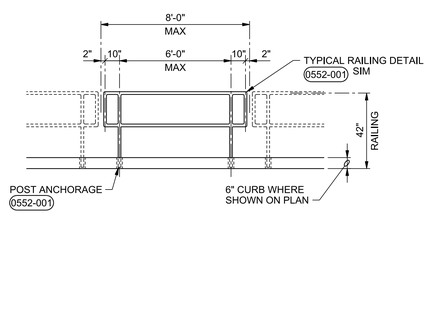

NOTES:

1. DETAIL SHOWN AT CURBED OPENING. WHERE NO CURB, PROVIDE 6" EDGE DISTANCE AND STIFFENED KICK PLATE ATTACHED TO REMOVABLE RAILING.
2. FABRICATE REMOVABLE RAILING IN MAXIMUM 8'-0" SECTIONS WITH 2 POSTS EACH SECTION.

RAILING - REMOVABLE TWO RAIL - ALUMINUM

NTS

0552-004

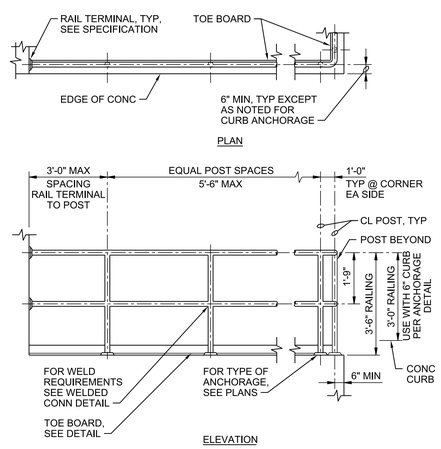

RAILING - 2 RAIL - STEEL

NTS

DETAIL 1 OF 7

0552-041

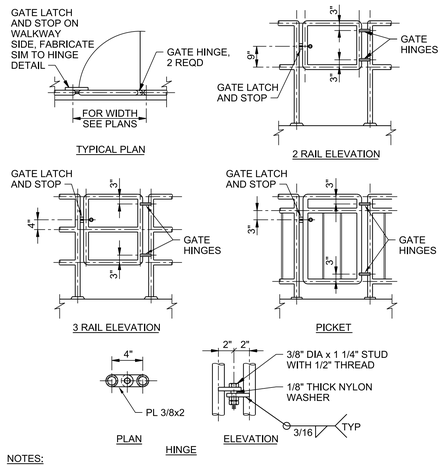

NOTES:

1. AT CONTRACTOR'S OPTION FABRICATE HINGES OR PROVIDE OTHER HINGES AS SPECIFIED. GALVANIZE AFTER ALL WELDING.

RAILING GATE - STEEL

NTS

DETAIL 2 OF 7

0552-041

THIS DRAWING IS LOANED FOR SOLE USE OF THE INTENDED RECIPIENT AND ONLY FOR THE LIMITED PURPOSES FOR WHICH IT WAS PROVIDED. USE BY OTHER ENTITIES OR FOR OTHER PURPOSES IS PROHIBITED AND AT THE USER'S OWN RISK. DRAWINGS ARE TO BE RETURNED UPON REQUEST OF THE FORWARDING RECIPIENT.

PART	REV	DESCRIPTION	DRW	CHKR	DE	DVR	DM	DATE
	0	ISSUED FOR CONSTRUCTION	RM	AF	HE		LE	06/2017

REVISION OR ISSUE PURPOSE

REVISION APPROVALS: PE, DATE

SQUAD CHECK: WE, AR, CV, ST, HV, EM, FP, PD, EE, IE, M, NP

RPE: Teresa J. Pierce, P.E. 6/30/17

DRW	R MARKEN	06/16/17
CHKR	A FIRTH	06/16/17
DE	H ELLIOTT	06/16/17
DVR		
DM	L ELLIS	06/16/17

REV. DATE — DRAWING APPROVALS — DATE

UCOR URS | CH2M Oak Ridge LLC

OF200 Mercury Treatment Facility

Designed by URS|CH2M Oak Ridge LLC (UCOR) for the Department of Energy Oak Ridge Office of Environmental Management under U. S. Government contract DE-SC-0004645

Y-12 National Security Complex managed and operated by Consolidated Nuclear Security, LLC for the Department of Energy under U.S. Government contract DE-NA0001942 • Oak Ridge, Tennessee •

PROJECT NAME: OF200 MERCURY TREATMENT FACILITY

STRUCTURAL

STANDARD DETAILS - SHEET 10 OF 12

USE	DISC	DT	DC	CM	SYSTEM	STAT	SIZE	BLDG	FL	CLASS
3	S	DT	X	NC	FAC	AR	E	9410-02	S	U

SH.	OF	TYPE		PART	REV
10	12	DD	S941002-F-0054	000	0

ISSUED FOR CONSTRUCTION

662886

6/22/2017 11:30:05 AM S941002-F-0054.dgn