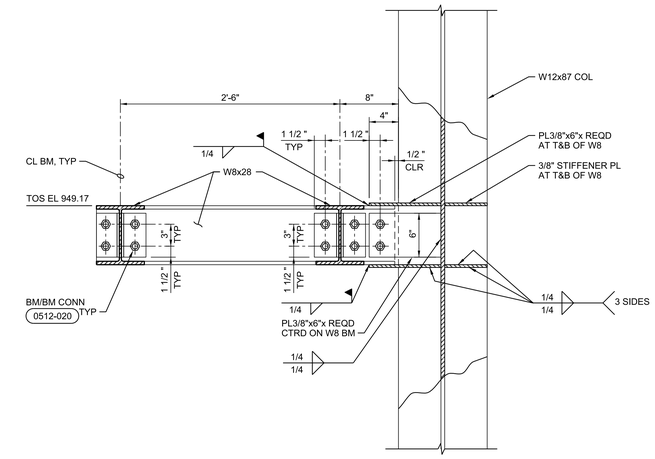

SECTION

1 DETAIL
1 1/2"=1'-0"
S941002-F-0012

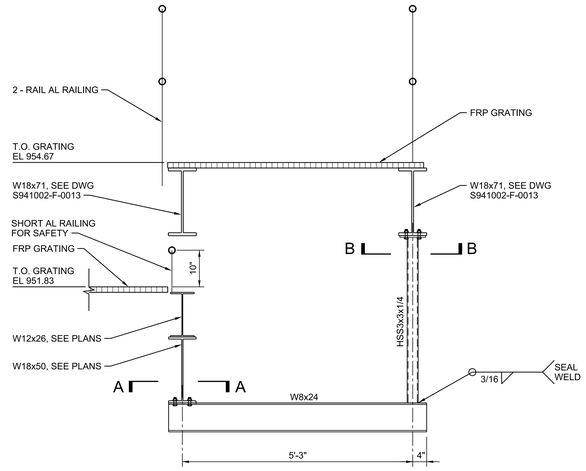

ELEVATION
3/4"=1'-0"

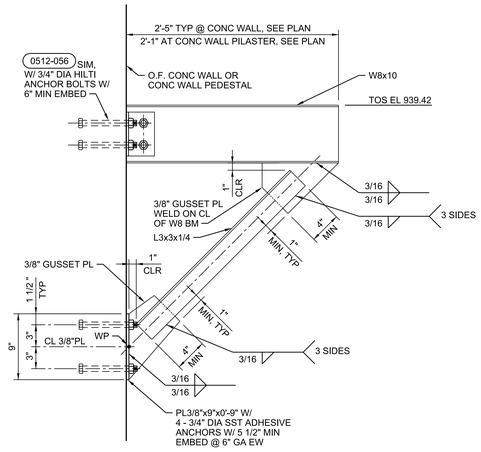

7 DETAIL
1 1/2"=1'-0"
S941002-F-0034

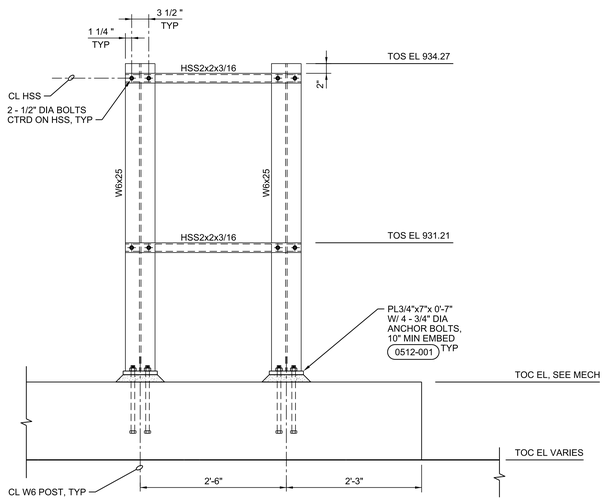

ELEVATION

2 DETAIL
1"=1'-0"
S941002-F-0007

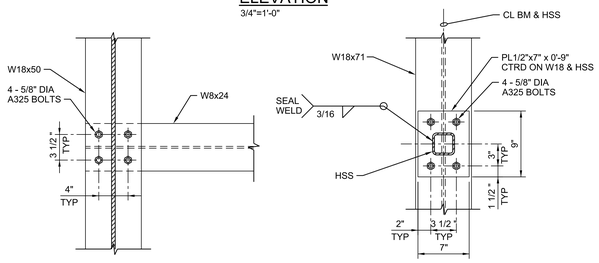

SECTION A-A
1 1/2"=1'-0"

SECTION B-B
1 1/2"=1'-0"

4 DETAIL
AS SHOWN
S941002-F-0012

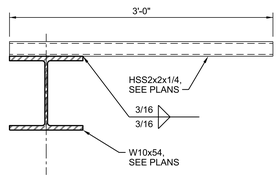

SECTION

5 DETAIL
1 1/2"=1'-0"
S941002-F-0024
S941002-F-0034

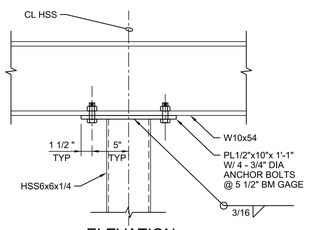

ELEVATION

6 DETAIL
1 1/2"=1'-0"
S941002-F-0034

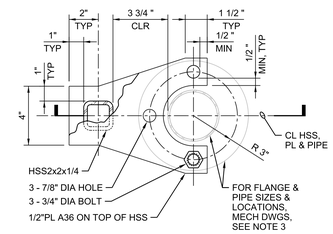

PLAN

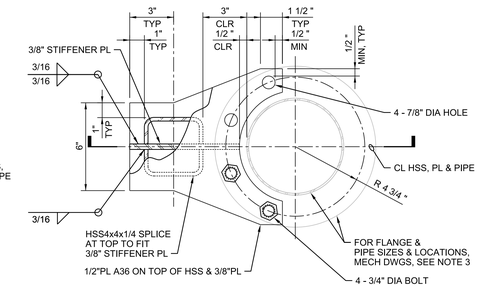

PLAN

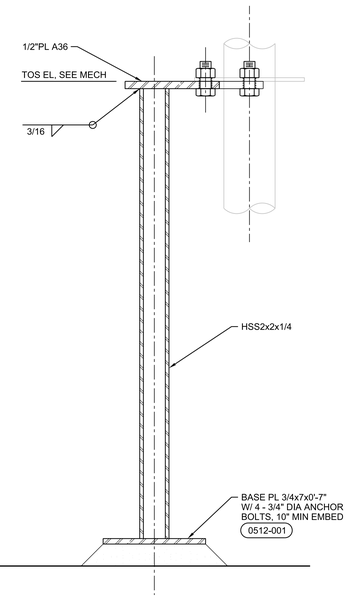

SECTION

PIPE SUPPORT FOR PIPE SIZE LESS OR EQUAL 3" DIAMETER

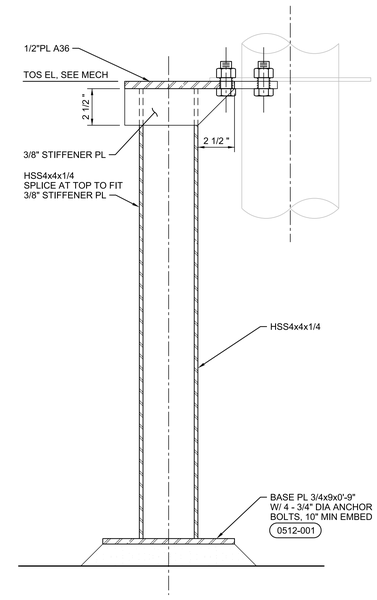

SECTION

PIPE SUPPORT FOR PIPE SIZE LARGER THAN 3" DIAMETER

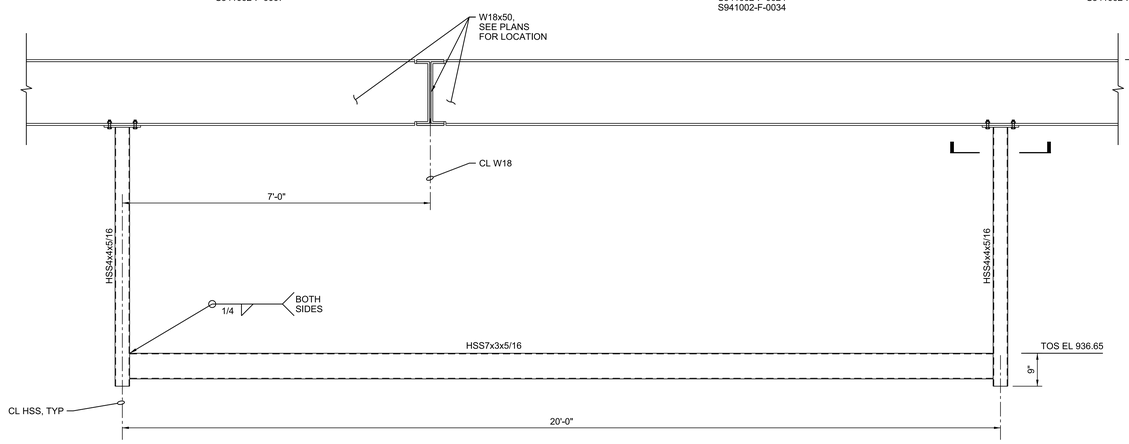

ELEVATION
3/4"=1'-0"

3 DETAIL
AS SHOWN
S941002-F-0012

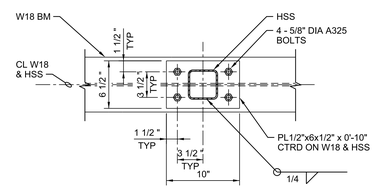

SECTION
1 1/2"=1'-0"

NOTES:
1. SUPPORT PRESSURE SAFETY VALVE UNDER BOTTOM OF FLANGE CONNECTION.
2. HSS SHALL BE GRADE 46 KSI STEEL.
3. HSS SUPPORT SHALL BE ALIGNED WITH PSV OUTLET PIPE.

8 PIPE SUPPORT DETAIL
3"=1'-0"
S941002-F-0009
S941002-F-0018

UCOR
URS | CH2M Oak Ridge LLC

OF200 Mercury Treatment Facility
Designed by URS|CH2M Oak Ridge LLC (UCOR) for the Department of Energy
Oak Ridge Office of Environmental Management under U. S. Government contract DE-SC-0004645

Y-12 National Security Complex managed and operated by Consolidated Nuclear Security, LLC for the Department of Energy under U.S. Government contract DE-NA0001942 • Oak Ridge, Tennessee •

DRW	I LAPINA-TRAUT	06/16/17
CHKR	A FIRTH	06/16/17
DE	H ELLIOTT	06/16/17
DVR		
DM	L ELLIS	06/16/17
PE	Teresa J. Pierce, P.E.	

RPE

PROJECT NAME:
OF200 MERCURY TREATMENT FACILITY

STRUCTURAL
TREATMENT FACILITY
PIPE SUPPORTS DETAILS

USE	DISC	DT	DC	CM	SYSTEM	STAT	SIZE	BLDG	FL	CLASS
3	S	S	B	NC	FAC	AR	E	9410-02	S	U

SH.	OF	TYPE		PART	REV
1	1	DD	S941002-F-0036	000	0

662886

PART	REV	DESCRIPTION	DRW	CHKR	DE	DVR	DM	DATE	PE	DATE
	0	ISSUED FOR CONSTRUCTION	ILT	AF	HE		LE	06/2017		

REVISION OR ISSUE PURPOSE — REVISION APPROVALS — SQUAD CHECK: WE AR CV ST HV EM FP PD EE IE M NP — DRAWING APPROVALS — DATE

THIS DRAWING IS LOANED FOR SOLE USE OF THE INTENDED RECIPIENT AND ONLY FOR THE LIMITED PURPOSES FOR WHICH IT WAS PROVIDED. USE BY OTHER ENTITIES OR FOR OTHER PURPOSES IS PROHIBITED AND AT THE USER'S OWN RISK. DRAWINGS ARE TO BE RETURNED UPON REQUEST OF THE FORWARDING RECIPIENT.

ISSUED FOR CONSTRUCTION

6/22/2017 11:24:11 AM
S941002-F-0036 Design