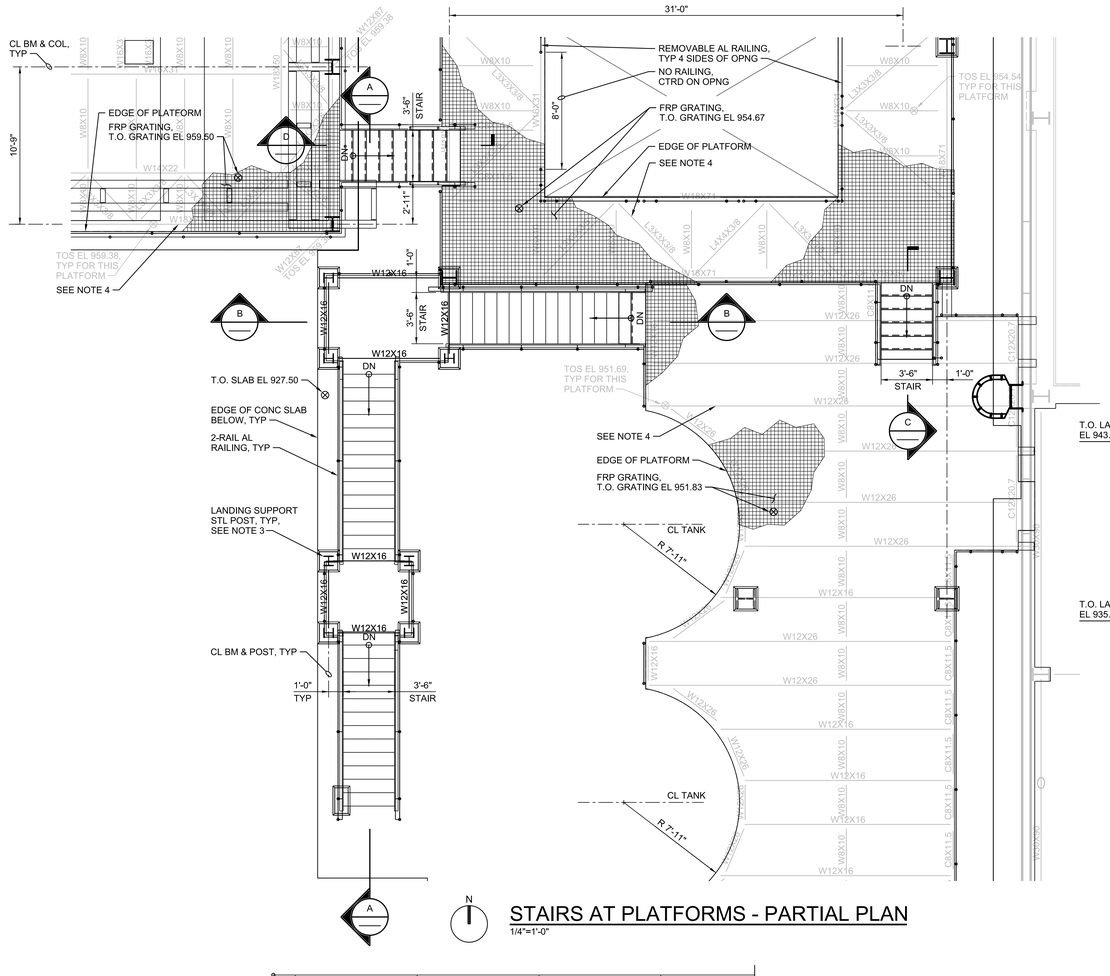

STAIRS AT PLATFORMS - PARTIAL PLAN

1/4"=1'-0"

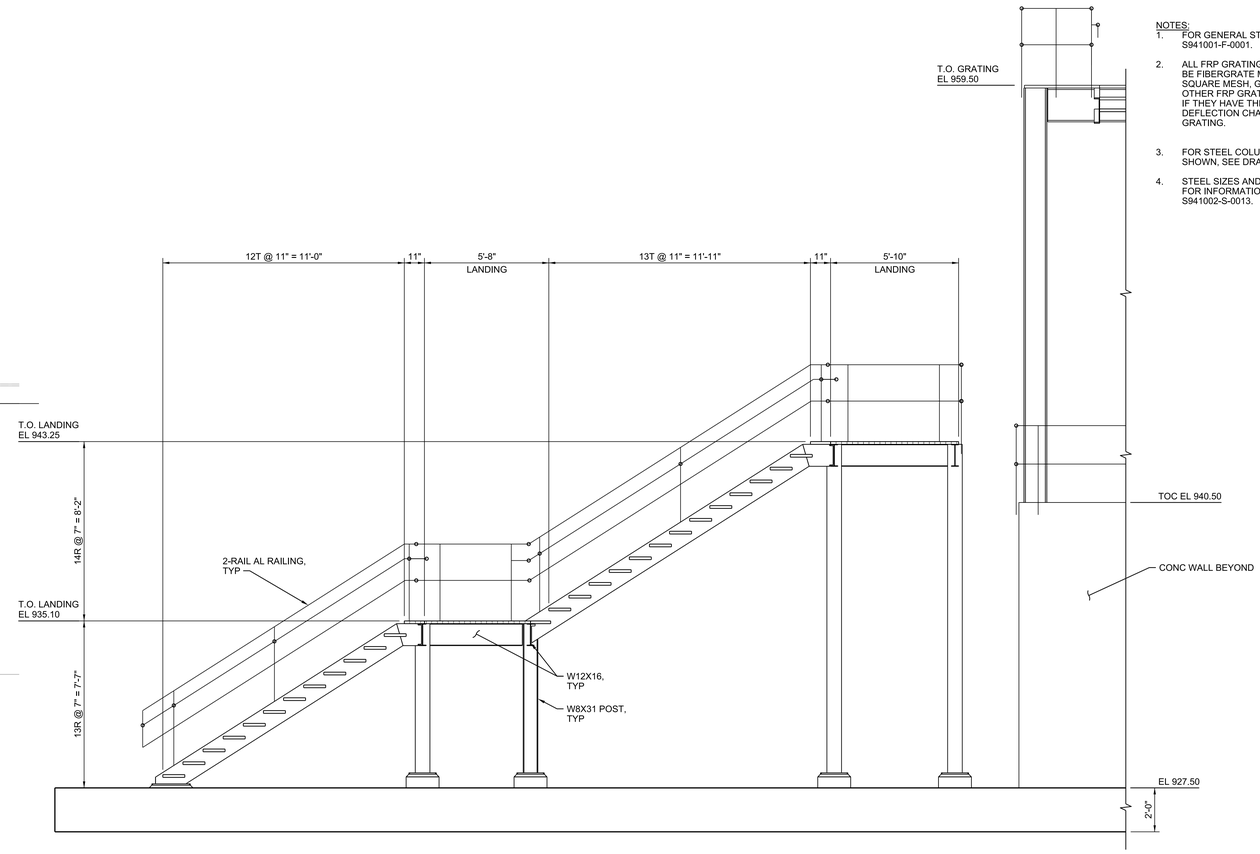

NOTES:

1. FOR GENERAL STRUCTURAL NOTES, SEE DRAWING S941001-F-0001.
2. ALL FRP GRATING, PLATFORMS AND STAIR TREADS TO BE FIBERGRATE MOLDED VI-CORR, 1 1/2" DEEP X 1 1/2" SQUARE MESH, GRIT TOP SURFACE, DARK GREY. OTHER FRP GRATING PRODUCTS MAY BE SUBSTITUTED IF THEY HAVE THE SAME, OR HIGHER, STRENGTH AND DEFLECTION CHARACTERISTICS IN A 1 1/2" THICK GRATING.
3. FOR STEEL COLUMN SIZES AND LOCATIONS THAT NOT SHOWN, SEE DRAWING S941002-S-0007.
4. STEEL SIZES AND LOCATIONS SCREENED FOR CLARITY. FOR INFORMATION NOT SHOWN, SEE DRAWING S941002-S-0013.

A SECTION

3/8"=1'-0"

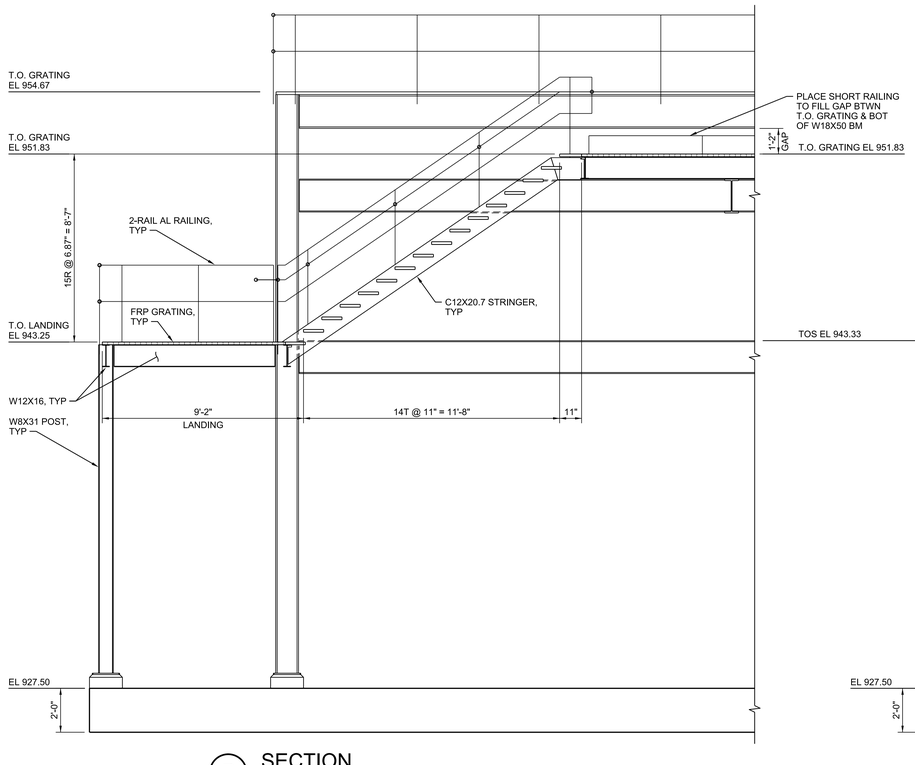

B SECTION

3/8"=1'-0"

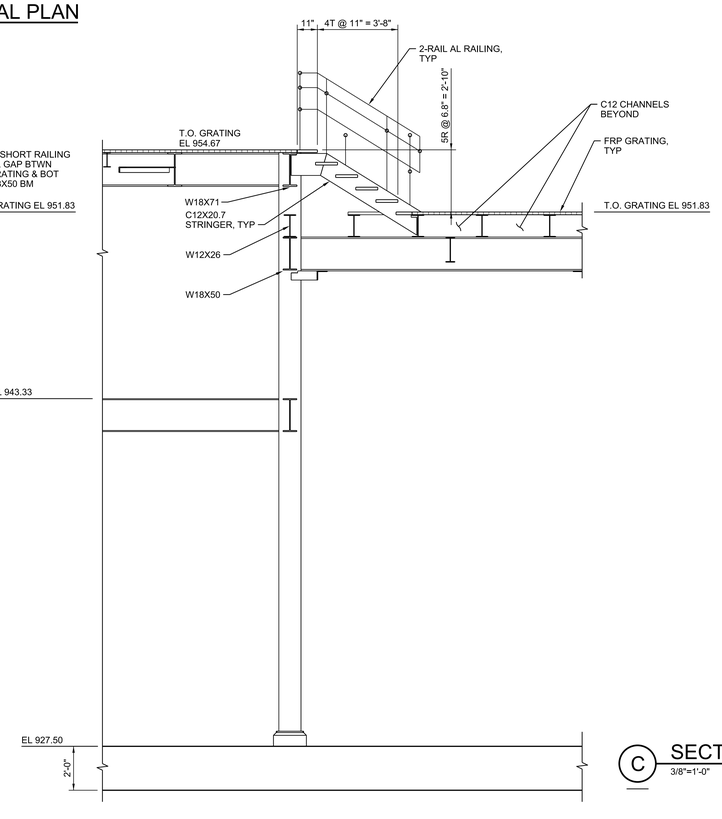

C SECTION

3/8"=1'-0"

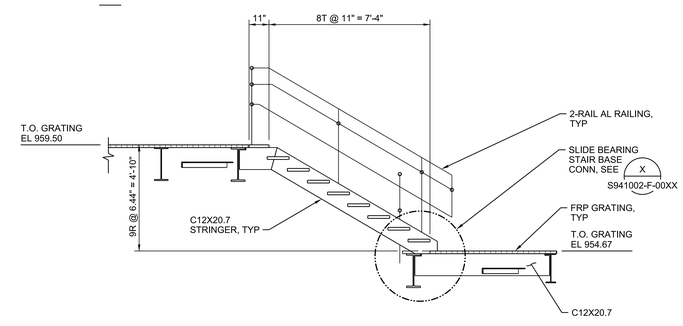

D SECTION

3/8"=1'-0"

THIS DRAWING IS LOANED FOR SOLE USE OF THE INTENDED RECIPIENT AND ONLY FOR THE LIMITED PURPOSES FOR WHICH IT WAS PROVIDED. USE BY OTHER ENTITIES OR FOR OTHER PURPOSES IS PROHIBITED AND AT THE USER'S OWN RISK. DRAWINGS ARE TO BE RETURNED UPON REQUEST OF THE FORWARDING RECIPIENT.

PART	REV	DESCRIPTION (REVISION OR ISSUE PURPOSE)	DRW	CHKR	DE	DVR	DM	DATE	PE	DATE	WE	AR	CV	ST	HV	EM	FP	PD	EE	IE	M	NP
	Ø	ISSUED FOR CONSTRUCTION	ILT	AF	HE		LE	06/2017														

REVISION APPROVALS — SQUAD CHECK

RPE: Nicholas William Wright, Registered Professional Engineer, State of Tennessee, 6/30/17

REV.	DATE	DRAWING APPROVALS		DATE
		DRW	I LAPINA-TRAUT	06/16/17
		CHKR	A FIRTH	06/16/17
		DE	H ELLIOTT	06/16/17
		DVR		
		DM	L ELLIS	06/16/17
		PE	Teresa J. Pierce, P.E.	

UCOR URS | CH2M Oak Ridge LLC

OF200 Mercury Treatment Facility

Designed by URS|CH2M Oak Ridge LLC (UCOR) for the Department of Energy
Oak Ridge Office of Environmental Management
under U. S. Government contract DE-SC-0004645

Y-12 National Security Complex managed and operated by Consolidated Nuclear Security, LLC for the Department of Energy under U.S. Government contract DE-NA0001942 • Oak Ridge, Tennessee •

PROJECT NAME: OF200 MERCURY TREATMENT FACILITY

STRUCTURAL
TREATMENT FACILITY
STAIRS - PARTIAL PLAN AND SECTIONS

USE	DISC	DT	DC	CM	SYSTEM	STAT	SIZE	BLDG	FL	CLASS
3	S	P	B	NC	FAC	AR	E	9410-02	P	U

SH.	OF	TYPE		PART	REV
1	1	DD	S941002-F-0030	000	0

662886

ISSUED FOR CONSTRUCTION

6/22/2017 11:37:34 AM
S941002-F-0030.dgn