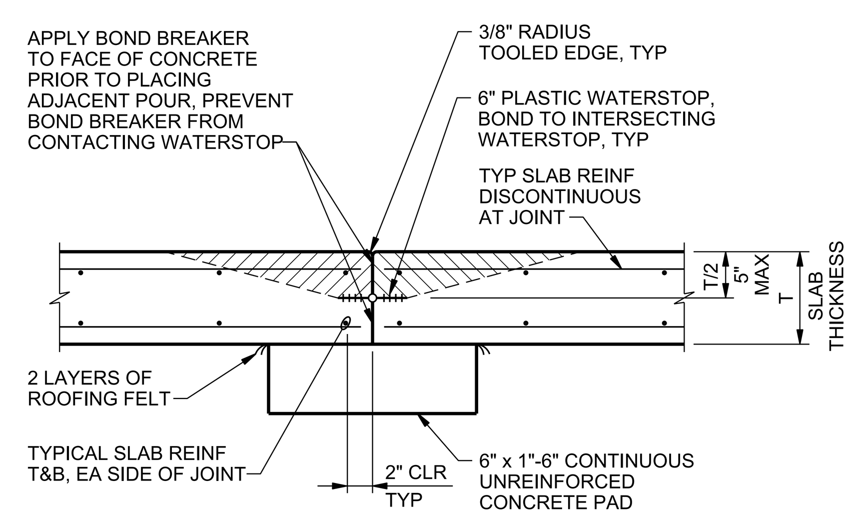

NOTE:

FOR CONCRETE PLACEMENT AROUND WATERSTOP, SEE (0315-133)

BASE SLAB FULL CONTRACTION JOINT

NTS

0315-162

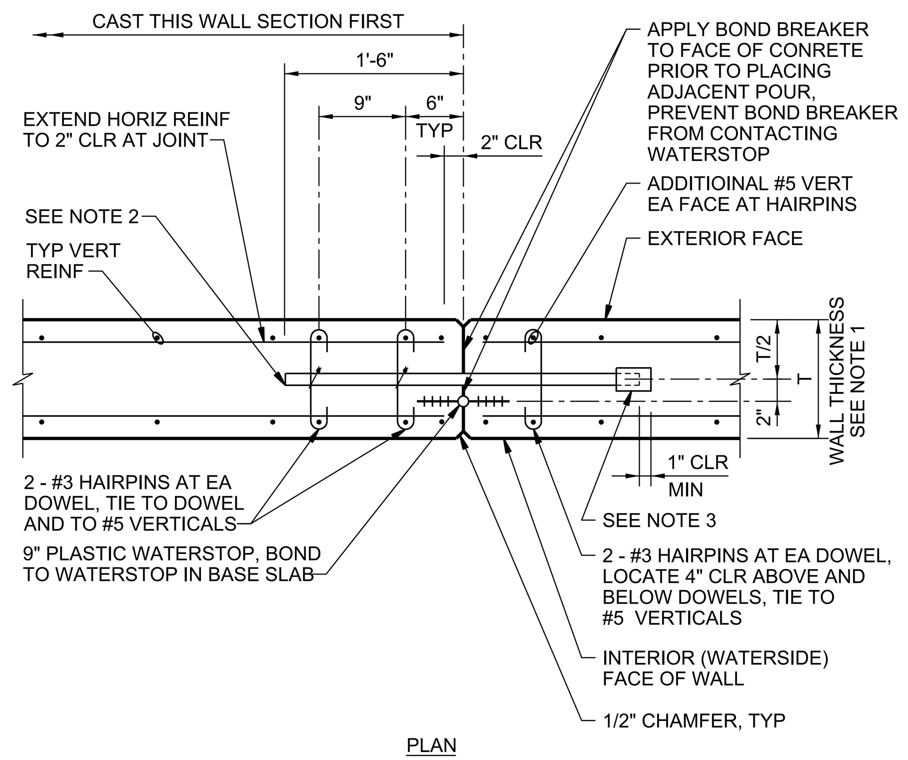

PLAN

NOTES:

1. FOR WALLS WITH THICKNESS OF 10" THRU 24".
2. 1" DIA x 3'-0" SMOOTH COATED BAR DOWELS. LOCATE AT 1'-0" MAX FROM T AND B OF WALL AND AT 2'-0" MAX SPACING. ALIGN AND TIE-IN-PLACE TO REINF. COATING SHALL CONSIST OF A CORROSION RESISTANT COATING PLUS A LUBRICANT COATING AS SPECIFIED.
3. 1" ID x 2" PLASTIC CAP WITH 1" POLYSTYRENE BETWEEN END OF DOWEL AND END CAP. TAPE TO BAR FOR WATERTIGHT SEAL.

WALL VERTICAL CONTRACTION JOINT

NTS

0315-172

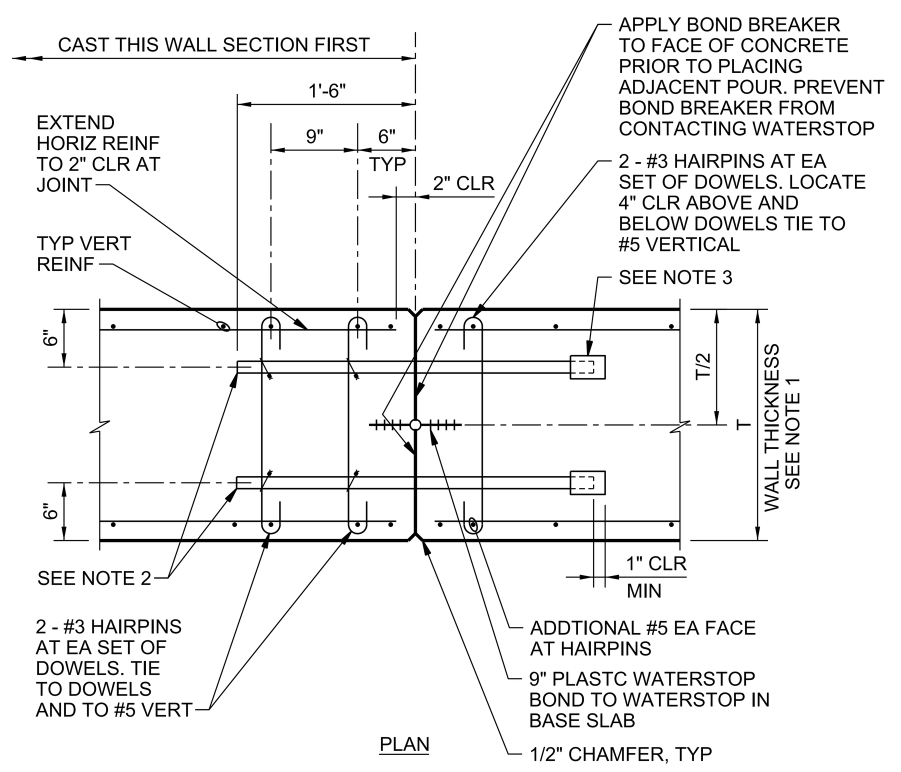

PLAN

NOTES:

1. FOR WALLS GREATER THAN 24" THICK.
2. 1" DIA x 3'-0" SMOOTH COATED STEEL BAR DOWELS. LOCATE AT 1'-0" MAX FROM T & B OF WALL AND AT 2'-0" MAX SPACING. ALIGN AND TIE IN PLACE TO REINF. COATING SHALL CONSIST OF A CORROSION RESISTANT COATING PLUS A LUBRICANT COATING AS SPECIFIED.
3. 1" ID x 2" PLASTIC EXP CAP WITH 1" POLYSTYRENE BETWEEN END OF DOWEL AND END OF CAP. TAPE TO BAR FOR WATERTIGHT SEAL.

WALL VERTICAL CONTRACTION JOINT

NTS

0315-173

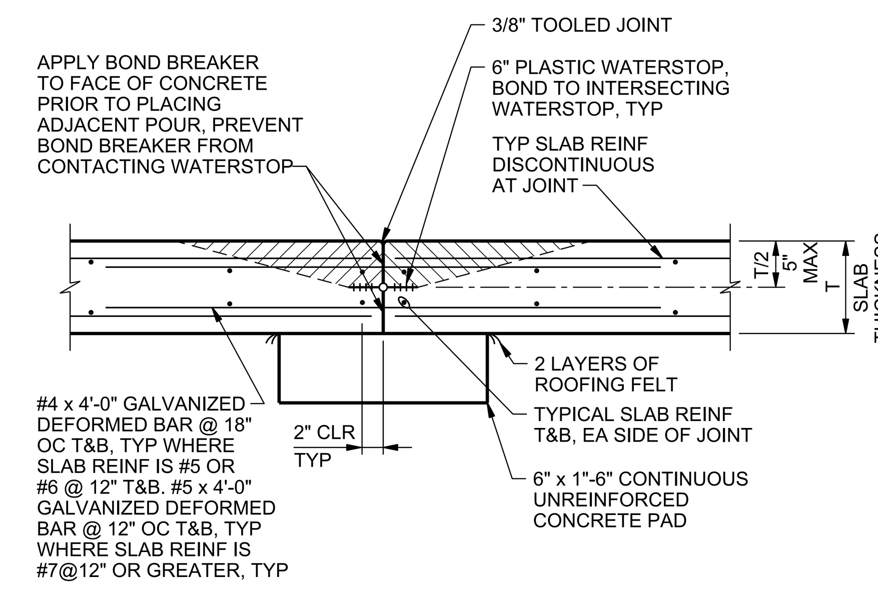

NOTE:

FOR CONCRETE PLACEMENT AROUND WATERSTOP, SEE (0315-133)

BASE SLAB CONTROL JOINT

NTS

0315-182

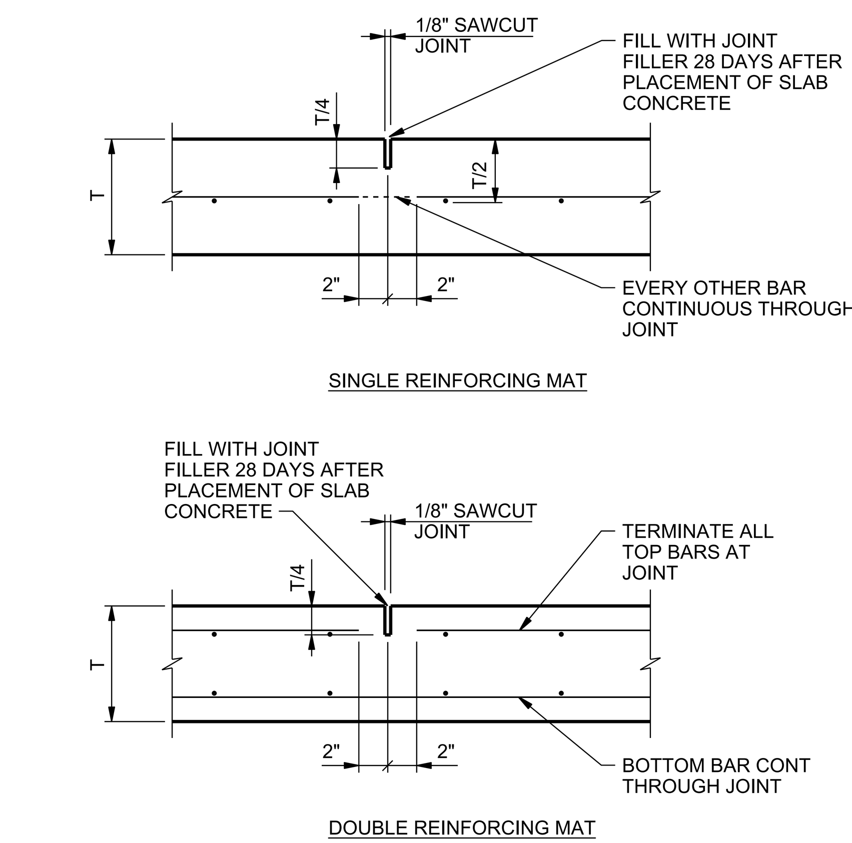

NOTES:

1. CONTRACTOR SHALL USE STRING LINE OR OTHER POSITIVE MEANS TO PLACE REINFORCING AND LOCATE SAWCUT.

BUILDING SLAB ON GRADE SAWN CONTROL JOINT

NTS

0315-192

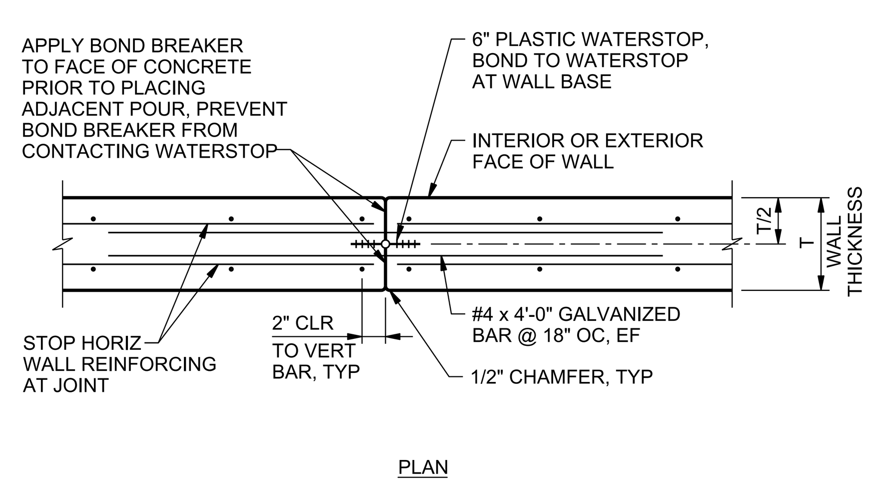

PLAN

WALL VERTICAL CONTROL JOINT

NTS

0315-201

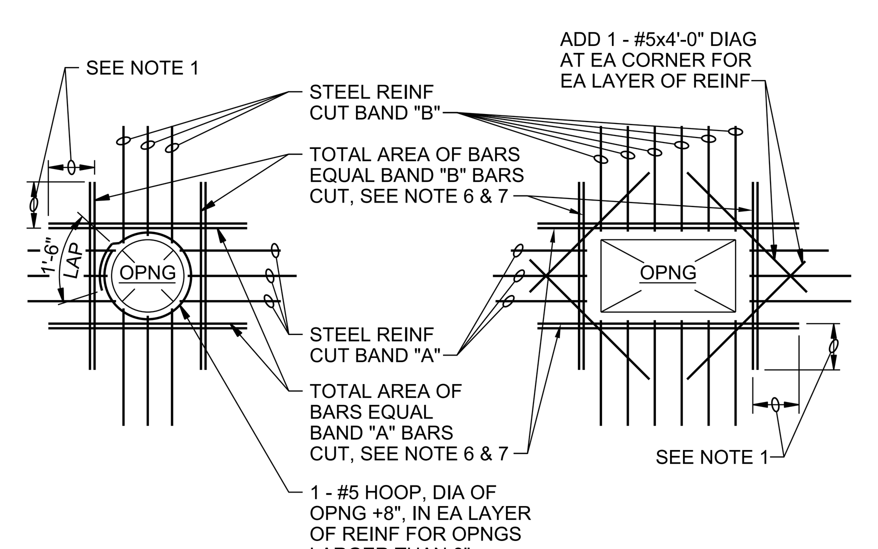

NOTES:

1. PROVIDE MINIMUM LAP, SEE GENERAL STRUCTURAL NOTES.
2. TYPICAL FOR ALL OPENINGS IN CONCRETE WALLS OF BELOW GRADE AND HYDRAULIC STRUCTURES AND ALL STRUCTURAL CONCRETE SLABS UNLESS INDICATED OTHERWISE ON PLANS.
3. DO NOT WELD REINFORCEMENT TO PIPE SLEEVES AND INSERTS.
4. PROVIDE A MINIMUM OF 2 "A" BARS AND 2 "B" BARS EACH SIDE OF OPENING (1 EACH FACE), INCLUDING DOWELS AND CORNER BARS, TYPICAL.
5. FOR OPENINGS LARGER THAN 8'-0", REINFORCE SAME AS FOR 8'-0" OPENINGS.
6. SPACE AT 3 BAR DIAMETERS (OR 3" MINIMUM) ON CENTER. LOCATE HALF OF TOTAL AREA ON EACH SIDE OF OPENING.
7. AT OPENINGS WITHIN 12" OF AN INTERSECTING WALL OR SLAB, PROVIDE ONLY THE EXTRA REINFORCEMENT WHICH WILL FIT, AT THE BAR SPACING IN NOTE 6.

OPENING REINFORCING

NTS

0330-001

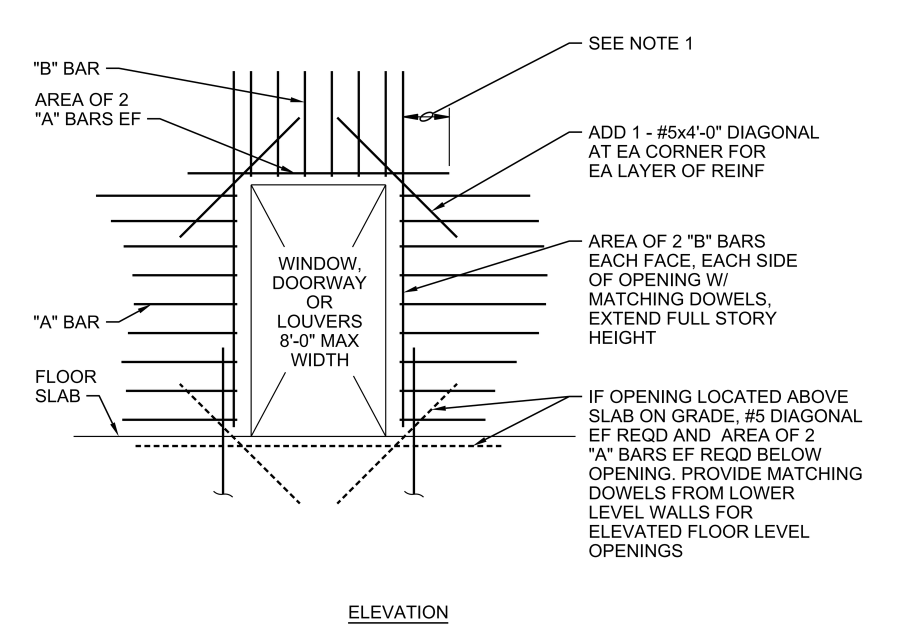

ELEVATION

NOTES:

1. PROVIDE MINIMUM LAP, SEE GENERAL STRUCTURAL NOTES.
2. TYPICAL FOR ALL OPENINGS IN ABOVE GROUND BUILDING CONCRETE WALLS UNLESS INDICATED OTHERWISE ON PLANS.
3. DO NOT WELD REINFORCEMENT TO PIPE SLEEVES AND INSERTS.

OPENING REINFORCEMENT

NTS

0330-002

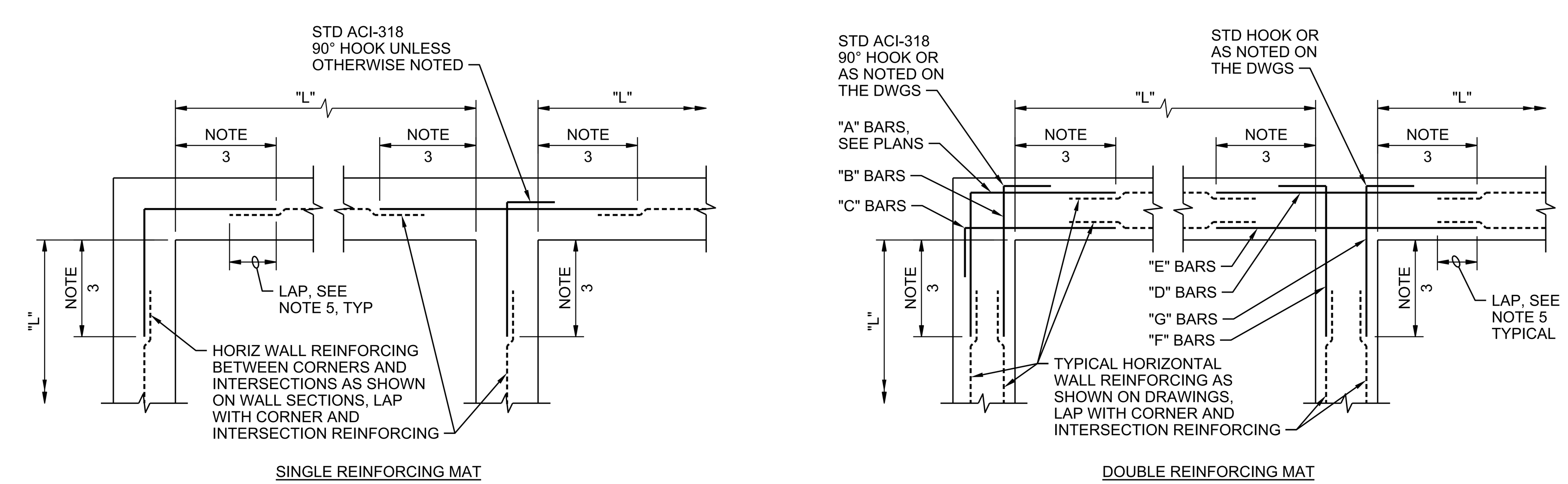

NOTES:

1. TYPICAL HORIZONTAL WALL CORNER AND INTERSECTION REINFORCING LAYOUT IS SHOWN TO AVOID CONGESTION AND PERMIT PROPER PLACEMENT, FOR SIZE AND SPACING SEE PLANS. ALL HORIZONTAL REINFORCING AT CORNERS AND INTERSECTIONS SHALL BE FABRICATED AND INSTALLED WITH SPLICES LOCATED WHERE SHOWN REGARDLESS OF BAR SIZE AND SPACING.
2. WHERE THE CORNER OR INTERSECTION REINFORCING SIZE AND SPACING IS NOT SHOWN, NOTED OR TABULATED ON THE PLANS, THE SIZE AND SPACING SHALL BE THE SAME AS THE WALL HORIZONTAL REINFORCING SHOWN ON THE WALL SECTIONS OR AS NOTED FOR THE REINFORCING BETWEEN THE CORNERS OR INTERSECTIONS.
3. EXCEPT WHERE OTHERWISE SHOWN ON THE DRAWINGS, THE LENGTH INDICATED AS "NOTE 3" SHALL BE THE LESSER OF L/4, 10 FEET, OR 1.0 TIMES THE HEIGHT OF THE WALL, EXCEPT THAT IN NO CASE SHALL IT BE LESS THAN 2 FEET.
4. L = LENGTH OF WALL PARALLEL TO THE BAR LENGTH IN QUESTION.
5. EXCEPT WHERE OTHERWISE SHOWN ON THE DRAWINGS, THE LENGTH INDICATED AS "NOTE 5" SHALL BE EQUAL TO ONE "LAP LENGTH" AS REQUIRED BY THE GENERAL STRUCTURAL NOTES. USE THE LAP LENGTH AS REQUIRED FOR THE SMALLER OF THE TWO REINFORCING BARS BEING SPLICED.
6. UNLESS OTHERWISE NOTED, "B" AND "C" BARS ARE THE SAME SIZE AND SPACING AND "F" AND "G" BARS ARE THE SAME SIZE AND SPACING.

TYPICAL WALL CORNER AND INTERSECTION REINFORCING

NTS

0330-003

THIS DRAWING IS LOANED FOR SOLE USE OF THE INTENDED RECIPIENT AND ONLY FOR THE LIMITED PURPOSES FOR WHICH IT WAS PROVIDED. USE BY OTHER ENTITIES OR FOR OTHER PURPOSES IS PROHIBITED AND AT THE USER'S OWN RISK. DRAWINGS ARE TO BE RETURNED UPON REQUEST OF THE FORWARDING RECIPIENT.

PART	REV	DESCRIPTION	DRW	CHKR	DE	DVR	DM	DATE
	Ø	ISSUED FOR CONSTRUCTION	RM	AF	HE		LE	Ø6/2017

REVISION OR ISSUE PURPOSE — REVISION APPROVALS (PE, DATE) — SQUAD CHECK (WE, AR, CV, ST, HV, EM, FP, PD, EE, IE, M, NP)

RPE

DRAWING APPROVALS		DATE
DRW	R MARKEN	Ø6/16/17
CHKR	A FIRTH	Ø6/16/17
DE	H ELLIOTT	Ø6/16/17
DVR		
DM	L ELLIS	06/16/17
PE	Teresa J. Pierce, P.E.	

6/30/17

OF200 Mercury Treatment Facility
UCOR URS | CH2M Oak Ridge LLC
Designed by URS|CH2M Oak Ridge LLC (UCOR) for the Department of Energy Oak Ridge Office of Environmental Management under U. S. Government contract DE-SC-0004645
Y-12 National Security Complex managed and operated by Consolidated Nuclear Security, LLC for the Department of Energy under U.S. Government contract DE-NA0001942 ◦ Oak Ridge, Tennessee ◦

PROJECT NAME: OF200 MERCURY TREATMENT FACILITY

STRUCTURAL
STANDARD DETAILS - SHEET 2 OF 12

USE	DISC	DT	DC	CM	SYSTEM	STAT	SIZE	BLDG	FL	CLASS
3	S	DT	X	NC	FAC	AR	E	9410-02	S	U

SH.	OF	TYPE	DRAWING NO.	PART	REV
2	12	DD	S941002-F-0046	000	0

662886

ISSUED FOR CONSTRUCTION