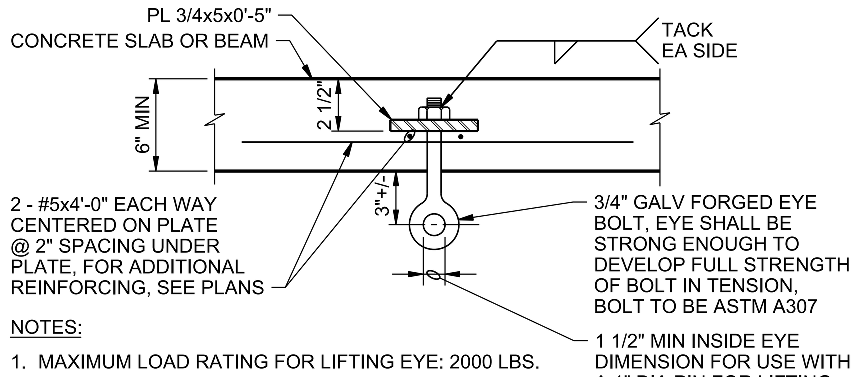

NOTES:

1. MAXIMUM LOAD RATING FOR LIFTING EYE: 2000 LBS.
2. SUBMIT DATA ON EYE BOLT WITH SHOP DRAWINGS.

TYPE 1

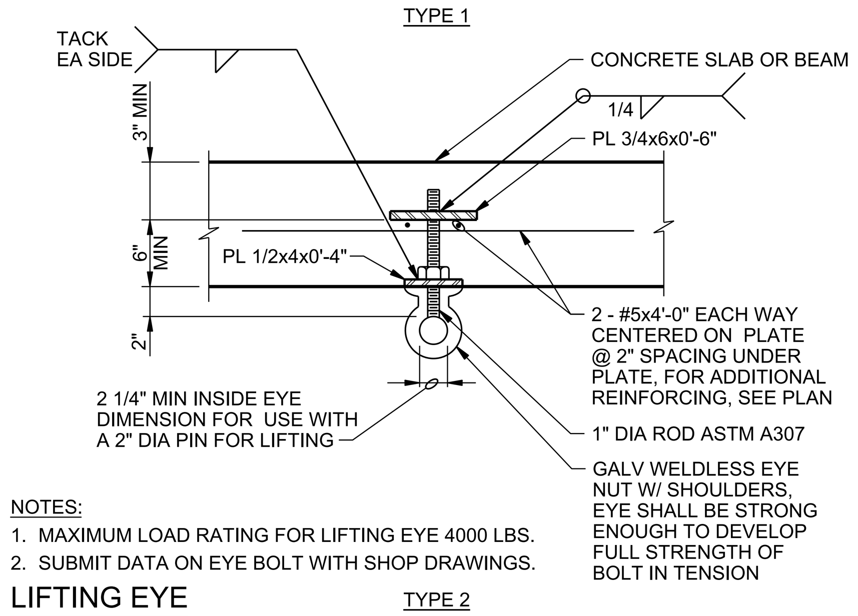

NOTES:

1. MAXIMUM LOAD RATING FOR LIFTING EYE 4000 LBS.
2. SUBMIT DATA ON EYE BOLT WITH SHOP DRAWINGS.

LIFTING EYE

TYPE 2

NTS

0512-121

ALUMINUM		
NOMINAL BEAM DEPTH, INCHES	ROWS OF BOLTS	LENGTH OF ANGLE
10	3	7 1/2"
7-8-9	2	5"
5-6	1	3"
4	1	2 3/4"

NOTES:

1. NUMBER OF ROWS IS EQUAL TO NUMBER OF BOLTS TO ENCLOSED WEB.
2. ALL FRAMING CONNECTIONS SHALL CONFORM TO SCHEDULE UNLESS DETAILED OTHERWISE ON FRAMING PLANS.

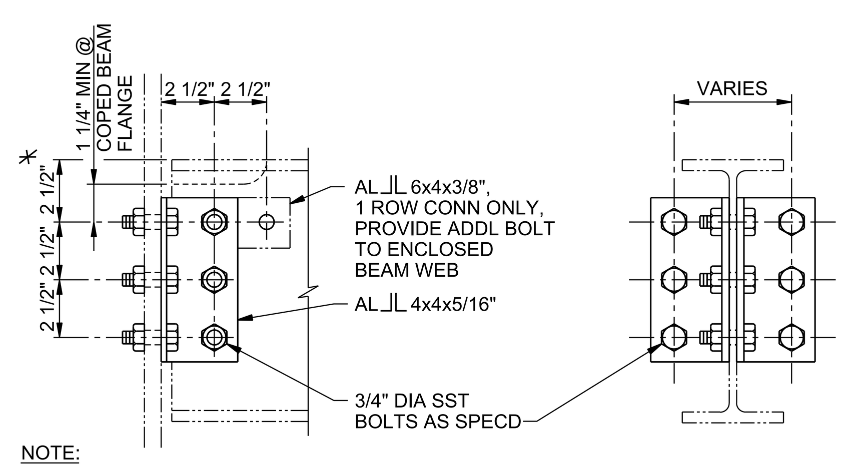

NOTE:

* 2 1/2" DIMENSION TYPICAL EXCEPT 2" FOR 4" BEAM.

0514-020

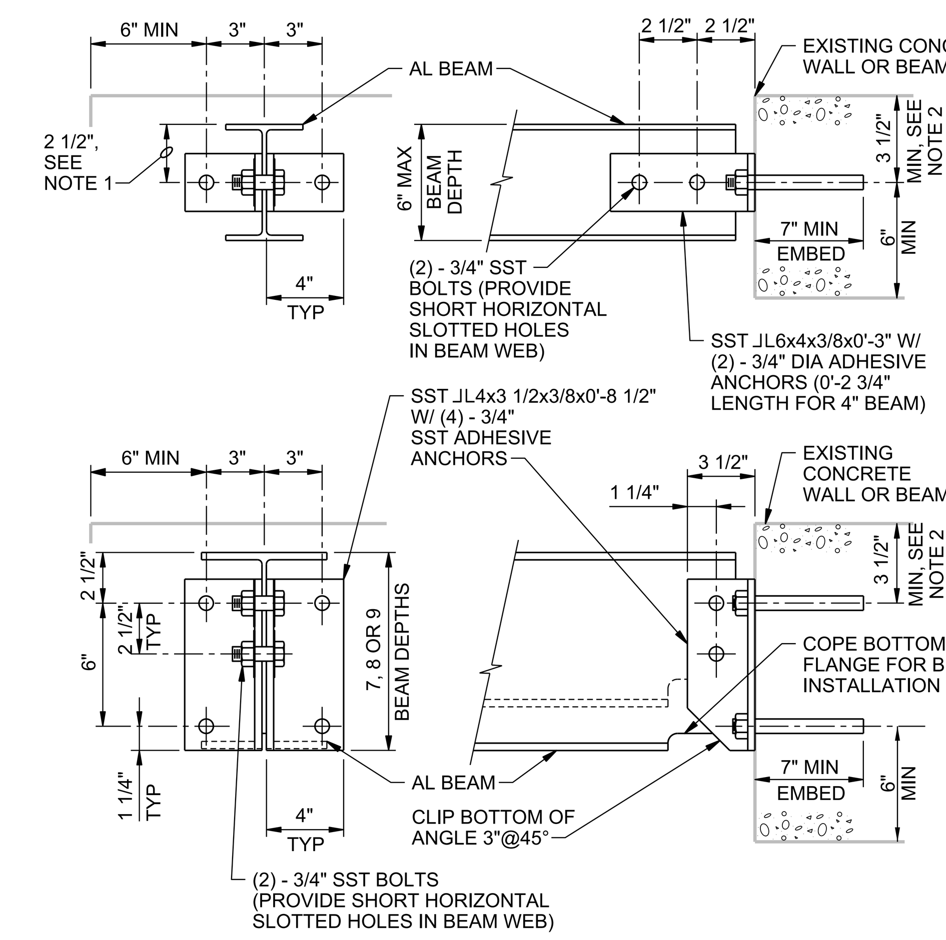

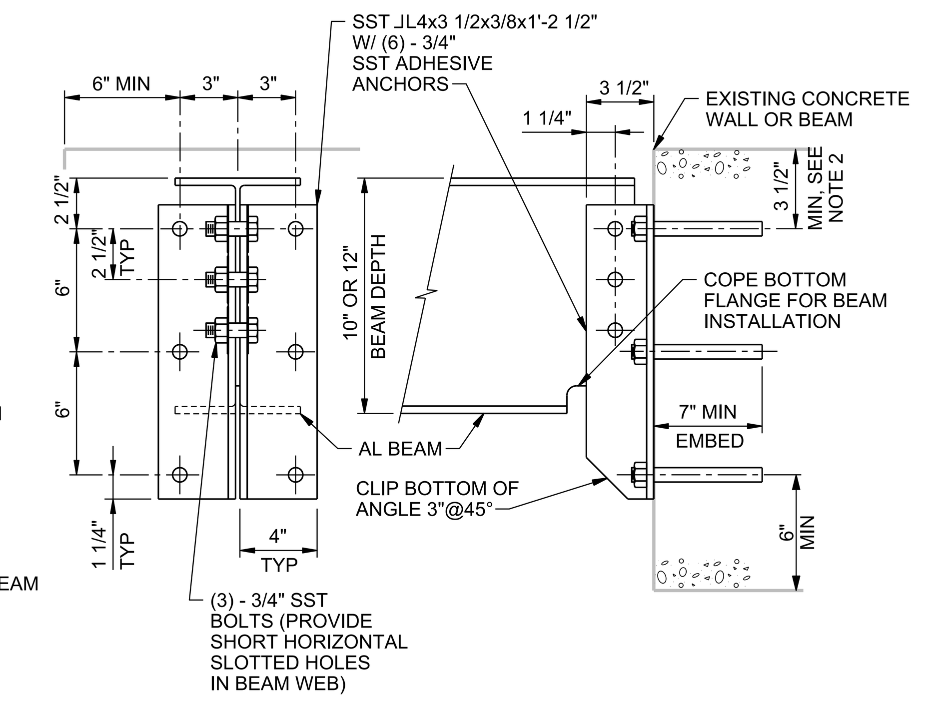

NOTES:

1. 2 1/2" DIMENSION TYPICAL EXCEPT 2" FOR 4" BEAMS.
2. DO NOT CUT EXISTING CONCRETE BEAM TOP REINFORCEMENT DURING DRILL-IN ANCHOR INSTALLATION. FIELD LOCATE BEAM REINFORCEMENT PRIOR TO FABRICATION. ADD LENGTH TO CLIP ANGLES AS REQUIRED TO LOWER ANCHORS TO CLEAR REINFORCEMENT WHILE MAINTAINING SPACING AND EDGE DISTANCE AS SHOWN.
3. WHERE BOTH ENDS OF BEAM ARE ATTACHED TO A WALL, PROVIDE LONG HORIZONTALLY SLOTTED HOLES IN BEAM WEB AT ONE END. TIGHTEN NUTS SNUG TIGHT, BACK OFF 1/2 TURN, AND LOCK WITH DOUBLE NUT.

0514-056

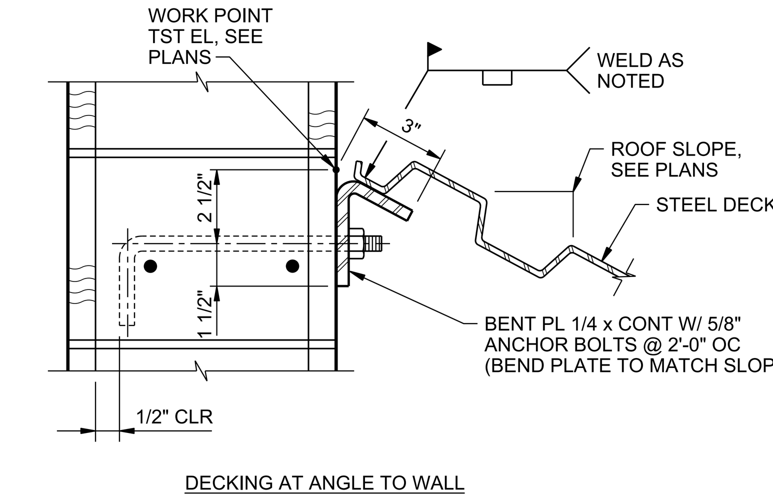

DECKING AT ANGLE TO WALL

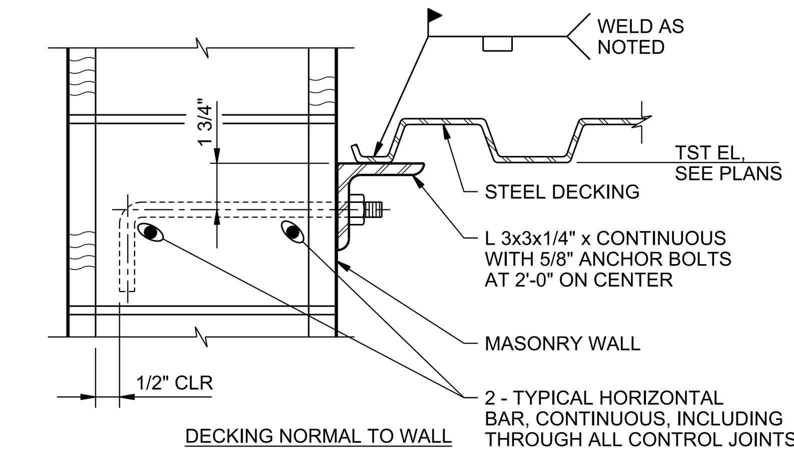

DECKING NORMAL TO WALL

DECKING LEDGER SUPPORT ANGLE

NTS

0531-001

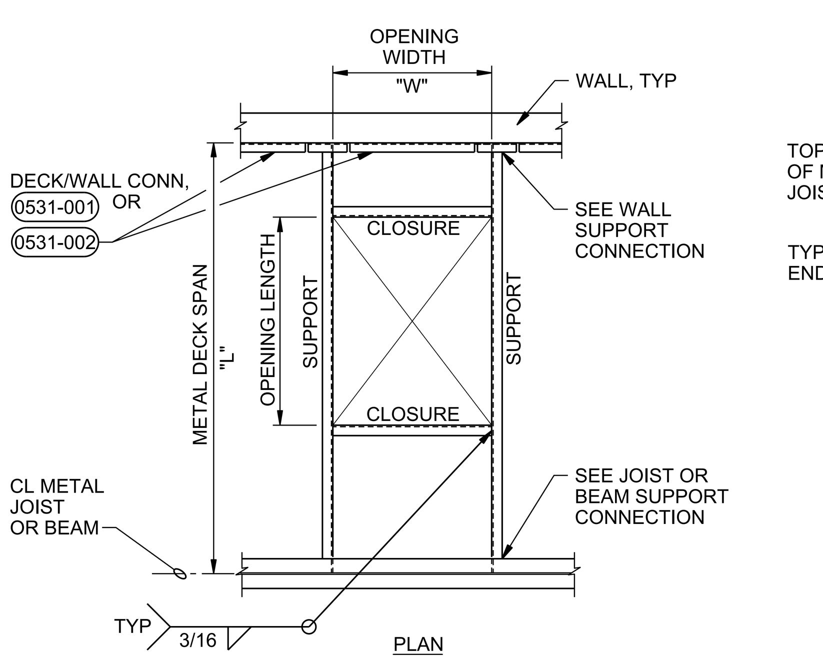

PLAN

OPENING	CLOSURE
2'-0" < W ≤ 4'-0"	L 3x3x1/4
4'-0" < W ≤ 6'-0"	L 4x3x1/4 (LLV)
6'-0" < W	NA

DECK SPAN	SUPPORT
L ≤ 6'-0"	L 4x3x1/4 (LLV)
6'-0" < L ≤ 7'-6"	L 5x3x1/4 (LLV)
7'-6" < L	NA

OPENINGS 2'-1" TO 6'-0"

NOTES:

1. ATTACH METAL DECKING TO ALL SUPPORTS PERPENDICULAR TO DECKING SPAN WITH SPECIFIED FASTENERS AT EACH VALLEY OF DECKING. ATTACH METAL DECKING TO SUPPORTS PARALLEL TO SPAN @ 6" ON CENTER. WHERE VALLEY OF DECKING DOES NOT FALL AT SUPPORTS PARALLEL TO DECK SPAN, PROVIDE FILLER PIECES FOR EQUAL ATTACHMENTS.
2. REFER TO SPECIFICATIONS FOR SMALLER DECK OPENING REINFORCEMENT.

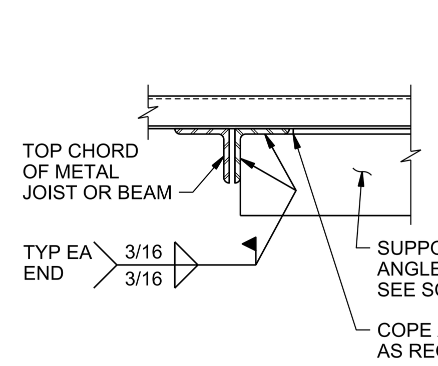

JOIST OR BEAM SUPPORT

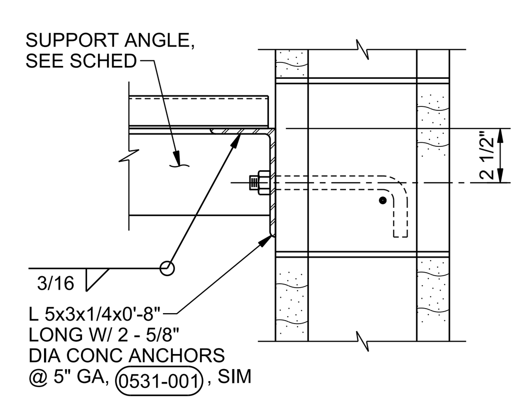

WALL SUPPORT

FRAMING CONNECTIONS

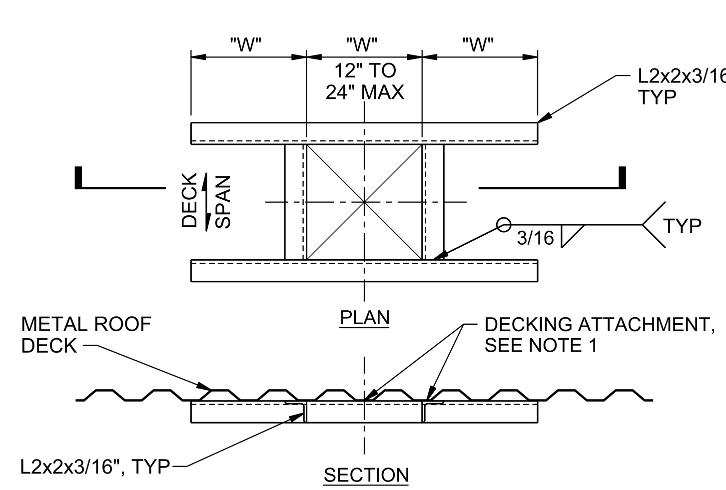

OPENINGS 1'-0" TO 2'-0"

ROOF DECK OPENING

NTS

0531-021

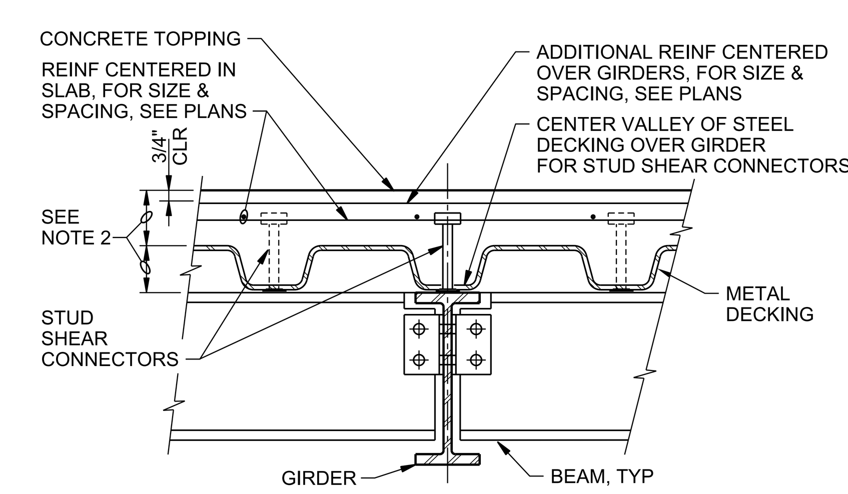

NOTES:

1. TOTAL NUMBERS OF STUD SHEAR CONNECTORS PER BEAM SHOWN ON FRAMING PLANS BY [X]. SPACE STUDS UNIFORMLY OVER FULL LENGTH OF BEAM.
2. FOR SLAB AND DECKING DEPTH, SEE PLANS.

COMPOSITE BEAM

NTS

0536-005

NOTES:

1. PROVIDE PROTECTION FOR DISSIMILAR METALS AND CONCRETE AS SPECIFIED.
2. AMERICAN STANDARD C12x7.41 ALUMINUM STRINGERS TYPICAL EXCEPT WHERE OTHERWISE NOTED ON PLANS.
3. STAIR HANDRAIL NOT SHOWN.
4. STAIR MANUFACTURER TO COORDINATE BOLTED TREADS AND HANDRAIL CONNECTIONS.
5. ALL FASTENERS SHALL BE STAINLESS STEEL.
6. FIELD VERIFY DIMENSIONS AND ELEVATIONS PRIOR TO FABRICATION.
7. FOR RISER PLATE SEE PARTIAL RISER PLATE DETAIL UNLESS NOTED OTHERWISE. CLEARANCE BETWEEN TOP OF RISER PLATE AND BOTTOM OF TREAD TO BE 3 3/4" MAX. FOR STAIRS WITH PICKET HANDRAIL EXTEND RISER PLATE PER FULL RISER PLATE DETAIL.

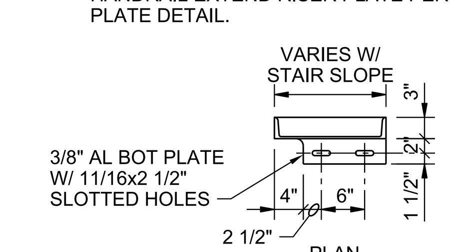

PLAN

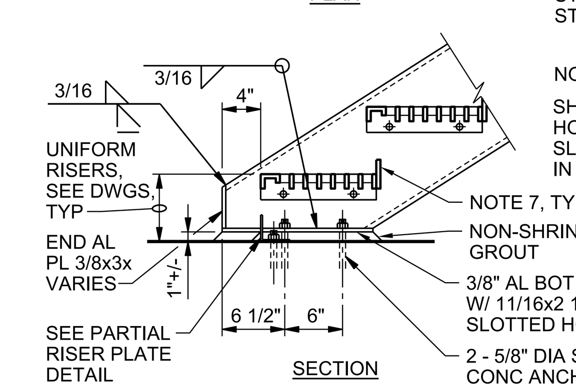

SECTION

BOTTOM CONNECTION

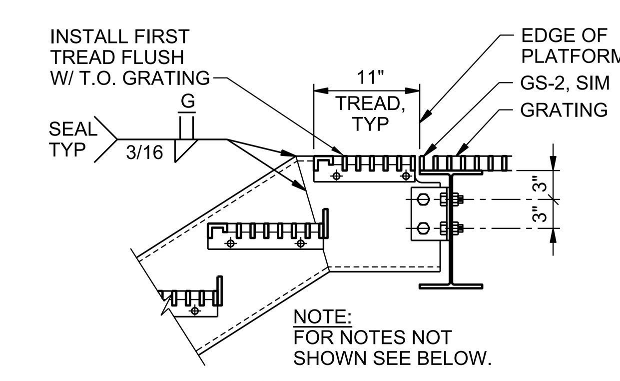

TOP CONNECTION - ALUMINUM

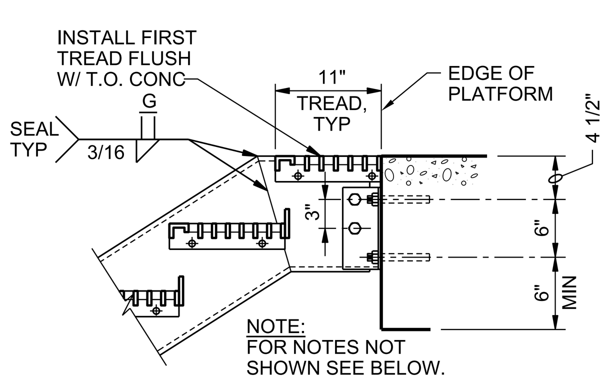

TOP CONNECTION - CONCRETE

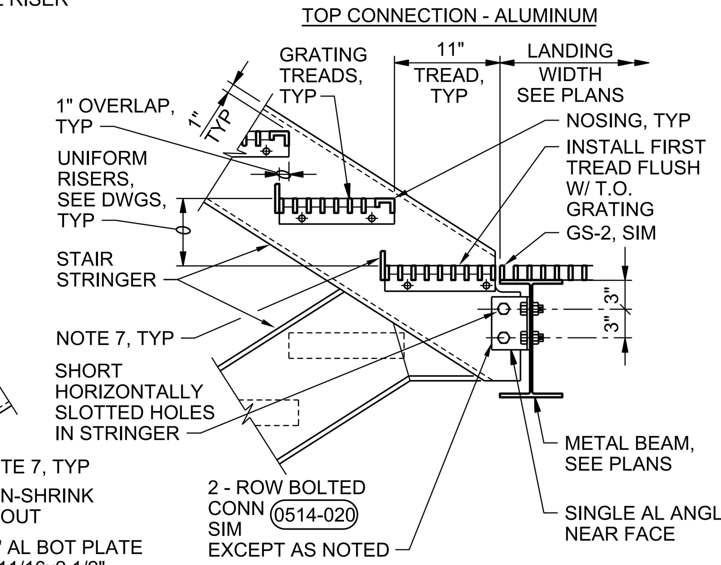

LANDING CONNECTION - ALUMINUM

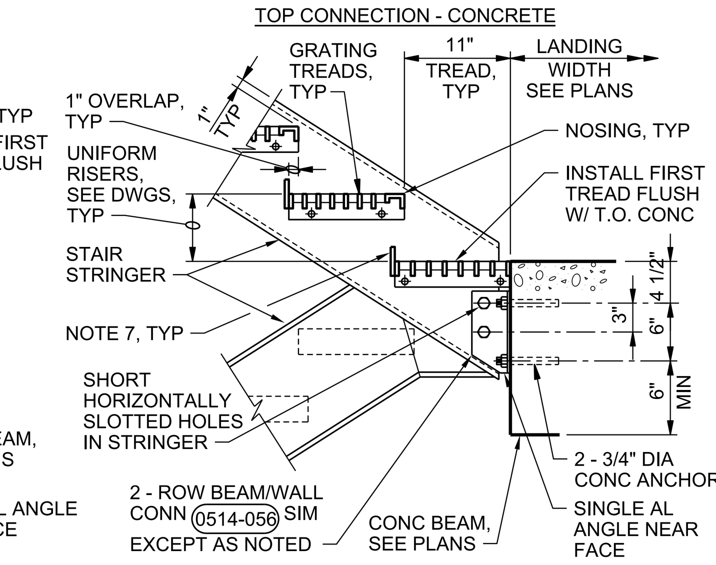

LANDING CONNECTION - CONCRETE

STAIR DETAILS - ALUMINUM

NTS

DETAIL 1 OF 2

0551-001

THIS DRAWING IS LOANED FOR SOLE USE OF THE INTENDED RECIPIENT AND ONLY FOR THE LIMITED PURPOSES FOR WHICH IT WAS PROVIDED. USE BY OTHER ENTITIES OR FOR OTHER PURPOSES IS PROHIBITED AND AT THE USER'S OWN RISK. DRAWINGS ARE TO BE RETURNED UPON REQUEST OF THE FORWARDING RECIPIENT.

PART	REV	DESCRIPTION	DRW	CHKR	DE	DVR	DM	DATE	PE	DATE
	0	ISSUED FOR CONSTRUCTION	RM	AF	HE		LE	06/2017		

REVISION OR ISSUE PURPOSE — REVISION APPROVALS

SQUAD CHECK: WE AR CV ST HV EM FP PD EE IE M NP

RPE — REV. DATE

DRAWING APPROVALS		DATE
DRW	R MARKEN	06/16/17
CHKR	A FIRTH	06/16/17
DE	H ELLIOTT	06/16/17
DVR		
DM	L ELLIS	06/16/17
PE	Teresa J. Pierce, P.E.	

Digitally signed by Teresa J. Pierce, P.E. Date: 2017.06.29 18:06:28 -04'00'

HARRY WILLIAM ELLIOTT, REGISTERED ENGINEER, AGRICULTURE COMMERCE, No. 118722, STATE OF TENNESSEE — 6/30/17

UCOR URS | CH2M Oak Ridge LLC

OF200 Mercury Treatment Facility

Designed by URS|CH2M Oak Ridge LLC (UCOR) for the Department of Energy Oak Ridge Office of Environmental Management under U. S. Government contract DE-SC-0004645

Y-12 National Security Complex managed and operated by Consolidated Nuclear Security, LLC for the Department of Energy under U.S. Government contract DE-NA0001942 ∘ Oak Ridge, Tennessee ∘

PROJECT NAME:
OF200 MERCURY TREATMENT FACILITY

STRUCTURAL
STANDARD DETAILS - SHEET 8 OF 12

USE	DISC	DT	DC	CM	SYSTEM	STAT	SIZE	BLDG	FL	CLASS
3	S	DT	X	NC	FAC	AR	E	9410-02	S	U

SH.	OF	TYPE	DRAWING NO.	PART	REV
8	12	DD	S941002-F-0052	000	0

662886

ISSUED FOR CONSTRUCTION