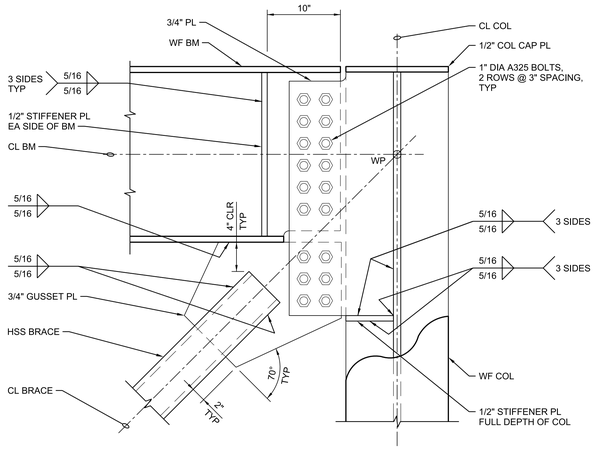

1 HSS BRACE AT TOP OF COLUMN
1 1/2"=1'-0"
S941002-F-0028

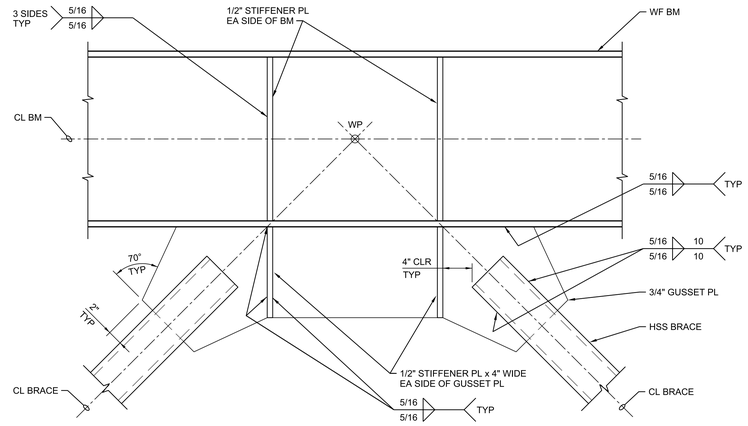

4 HSS BRACE TO BEAM
1 1/2"=1'-0"
S941002-F-0027
S941002-F-0028

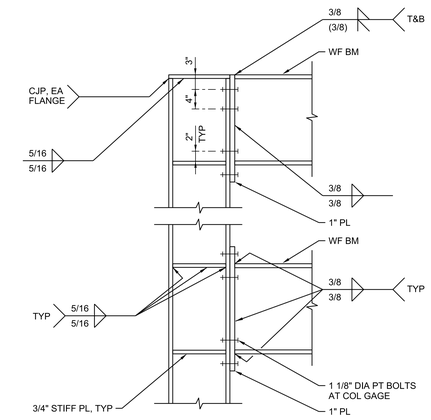

9 MOMENT CONNECTION TO COLUMN FLANGE
1"=1'-0"
S941002-F-0013

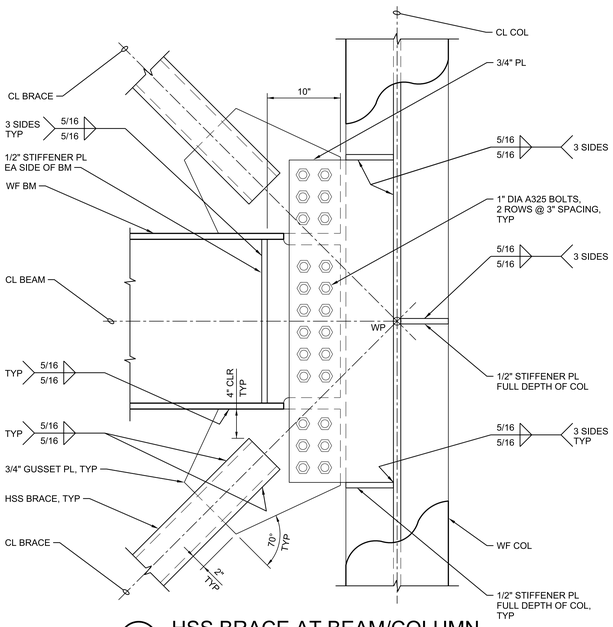

2 HSS BRACE AT BEAM/COLUMN
1 1/2"=1'-0"
S941002-F-0027
S941002-F-0028

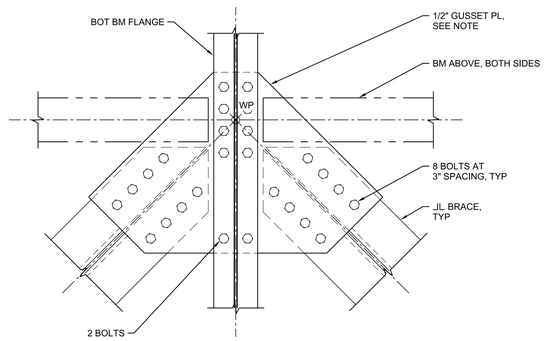

NOTE: GUSSET PLATE CONFIGURATION SHALL PROVIDE 2" MINIMUM EDGE DISTANCE TO BOLTS, TYPICAL.

5 HORIZONTAL BRACE CONNECTION
1 1/2"=1'-0"
S941002-F-0016

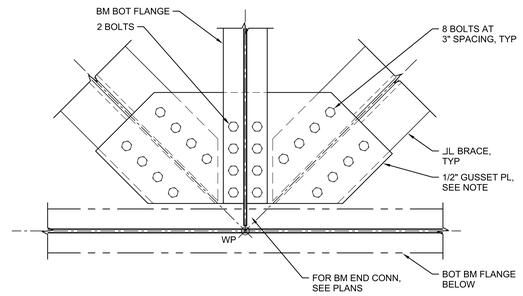

NOTE: GUSSET PLATE CONFIGURATION SHALL PROVIDE 2" MINIMUM EDGE DISTANCE TO BOLTS, TYPICAL.

7 HORIZONTAL BRACE CONNECTION
1 1/2"=1'-0"
S941002-F-0016

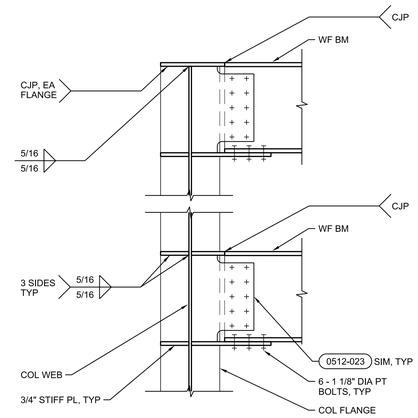

10 MOMENT CONNECTION TO COLUMN WEB
1"=1'-0"
S941002-F-0013

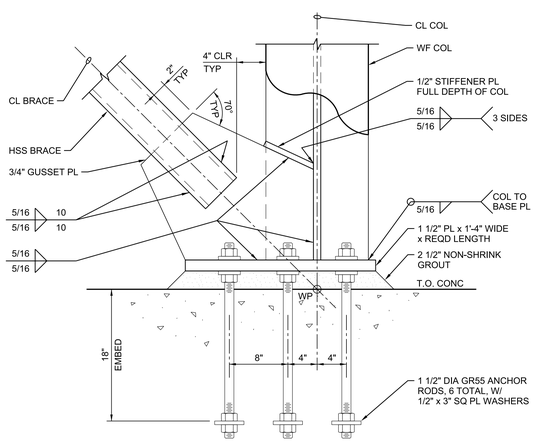

3 HSS BRACE TO COLUMN BASE
1 1/2"=1'-0"
S941002-F-0027
S941002-F-0028

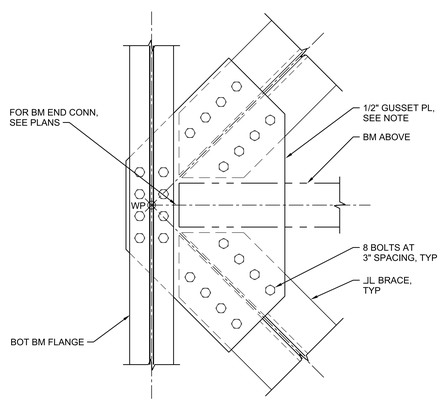

NOTE: GUSSET PLATE CONFIGURATION SHALL PROVIDE 2" MINIMUM EDGE DISTANCE TO BOLTS, TYPICAL.

6 HORIZONTAL BRACE CONNECTION
1 1/2"=1'-0"
S941002-F-0016

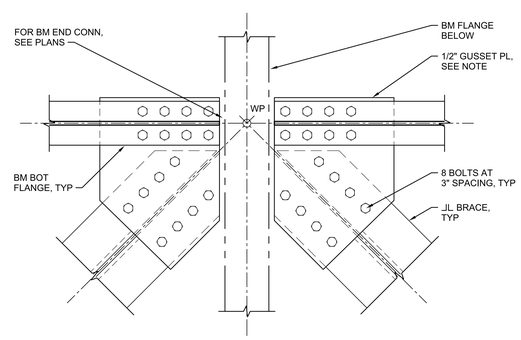

NOTE: GUSSET PLATE CONFIGURATION SHALL PROVIDE 2" MINIMUM EDGE DISTANCE TO BOLTS, TYPICAL.

8 HORIZONTAL BRACE CONNECTION
1 1/2"=1'-0"
S941002-F-0016

UCOR URS | CH2M Oak Ridge LLC

OF200 Mercury Treatment Facility
Designed by URS|CH2M Oak Ridge LLC (UCOR) for the Department of Energy
Oak Ridge Office of Environmental Management under U. S. Government contract DE-SC-0004645

Y-12 National Security Complex managed and operated by Consolidated Nuclear Security, LLC for the Department of Energy under U.S. Government contract DE-NA0001942 • Oak Ridge, Tennessee •

PROJECT NAME: OF200 MERCURY TREATMENT FACILITY

STRUCTURAL
TREATMENT FACILITY
STEEL CONNECTION DETAILS

USE	DISC	DT	DC	CM	SYSTEM	STAT	SIZE	BLDG	FL	CLASS
3	S	S	S	NC	FAC	AR	E	9410-02	S	U

SH.	OF	TYPE			PART	REV
1	1	DD	S941002-F-0040		000	0

662886

DRAWING APPROVALS		DATE
DRW	I LAPINA-TRAUT	06/16/17
CHKR	A FIRTH	06/16/17
DE	H ELLIOTT	06/16/17
DVR		
DM	L ELLIS	06/16/17
PE	Teresa J. Pierce, P.E.	

RPE

PART	REV	DESCRIPTION	DRW	CHKR	DE	DVR	DM	DATE	PE	DATE
	0	ISSUED FOR CONSTRUCTION	ILT	AF	HE		LE	06/2017		

REVISION OR ISSUE PURPOSE — REVISION APPROVALS — SQUAD CHECK: WE AR CV ST HV EM FP PD EE IE M NP

ISSUED FOR CONSTRUCTION

THIS DRAWING IS LOANED FOR SOLE USE OF THE INTENDED RECIPIENT AND ONLY FOR THE LIMITED PURPOSES FOR WHICH IT WAS PROVIDED. USE BY OTHER ENTITIES OR FOR OTHER PURPOSES IS PROHIBITED AND AT THE USER'S OWN RISK. DRAWINGS ARE TO BE RETURNED UPON REQUEST OF THE FORWARDING RECIPIENT.

6/22/2017 11:43:43 AM
S941002-F-0040.dgn