NOTES:
1. CONTRACTOR'S OPTION TO FABRICATE BRIDGE IN THREE SECTIONS.
2. FOR PERMISSIBLE SPLICE LOCATIONS, SEE SECTION B ON THIS SHEET.
3. FABRICATE SPLICES PER DETAIL 6 ON THIS SHEET.

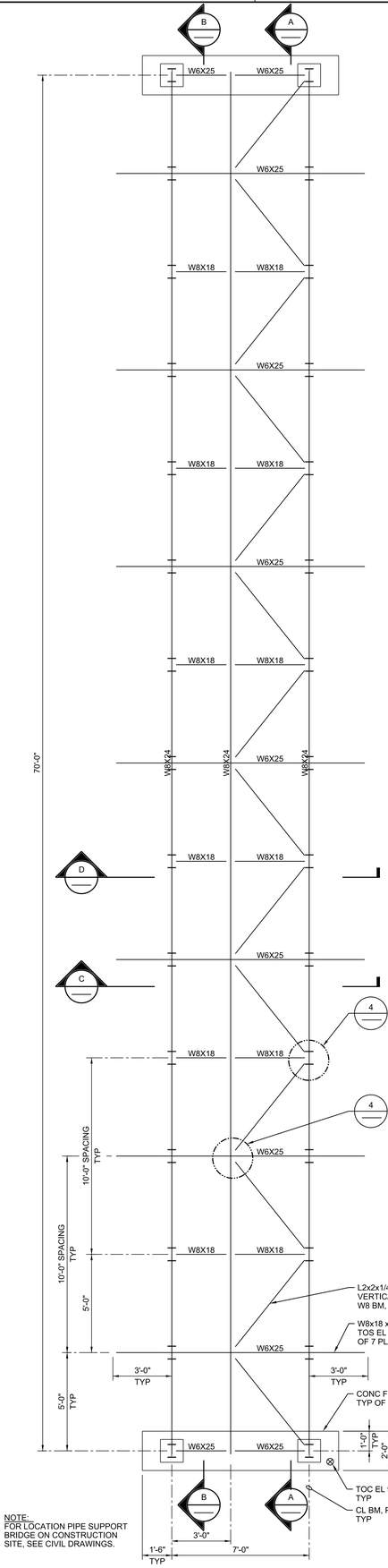

NOTE:
FOR LOCATION PIPE SUPPORT BRIDGE ON CONSTRUCTION SITE, SEE CIVIL DRAWINGS.

1 PIPE SUPPORT BRIDGE - PLAN
3/8"=1'-0"

C941001-F-0023

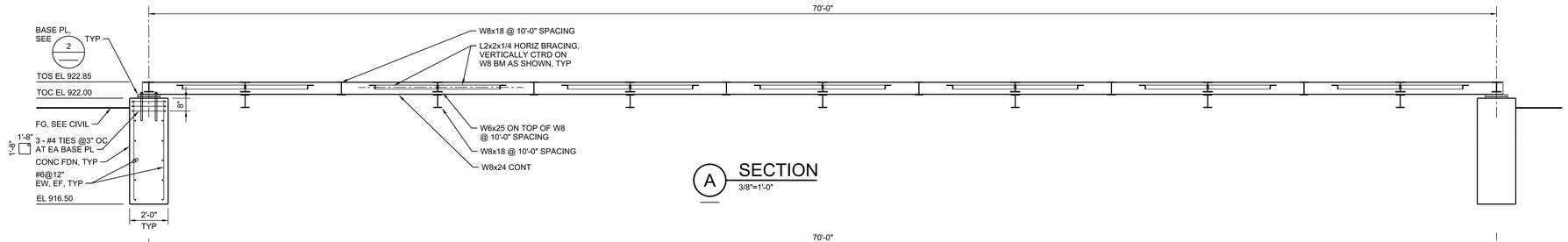

A SECTION
3/8"=1'-0"

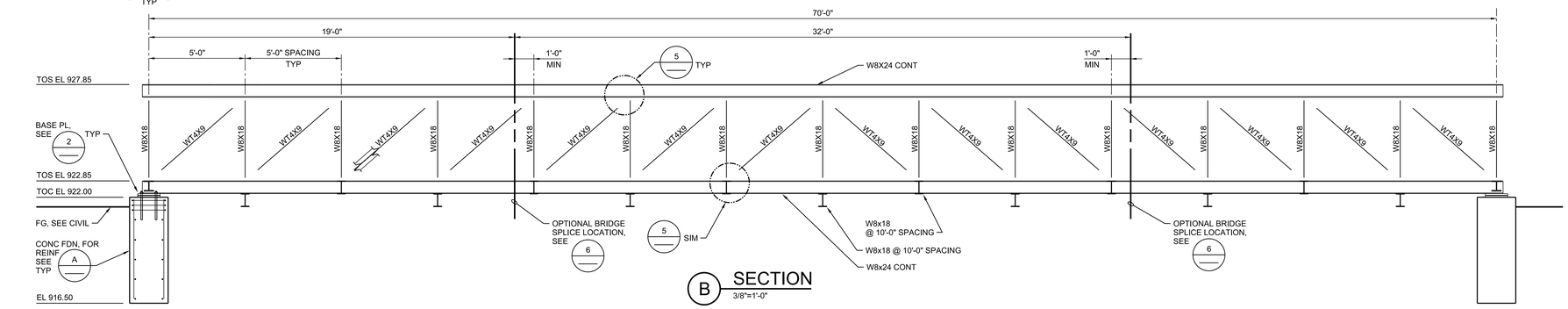

B SECTION
3/8"=1'-0"

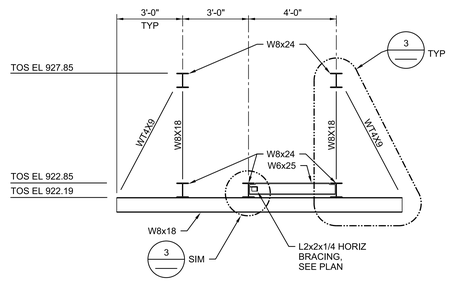

C SECTION
3/8"=1'-0"

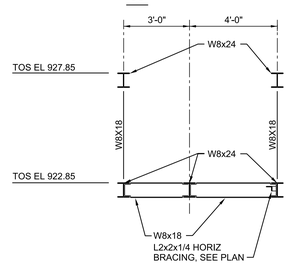

D SECTION
3/8"=1'-0"

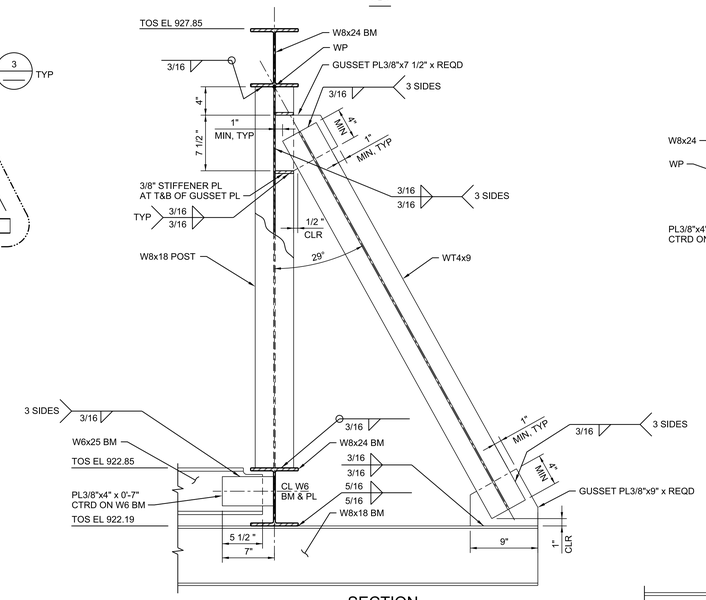

3 DETAIL
1 1/2"=1'-0"

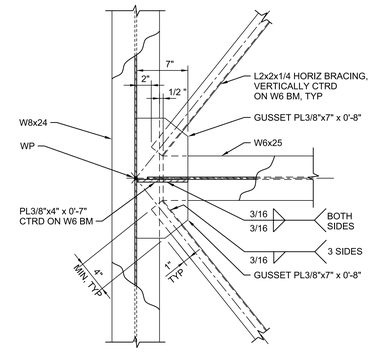

PLAN

4 DETAIL
1 1/2"=1'-0"

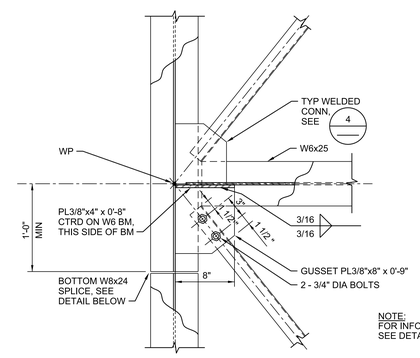

NOTE:
FOR INFORMATION NOT SHOWN, SEE DETAIL 4 THIS SHEET.

BOLTED HORIZONTAL BRACE DETAIL - PLAN

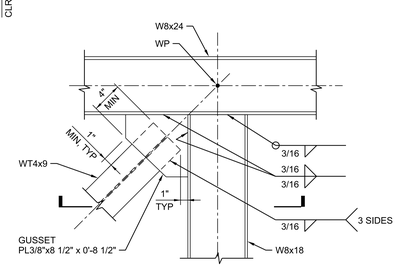

ELEVATION

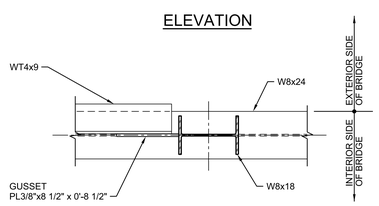

SECTION

5 DETAIL
1 1/2"=1'-0"

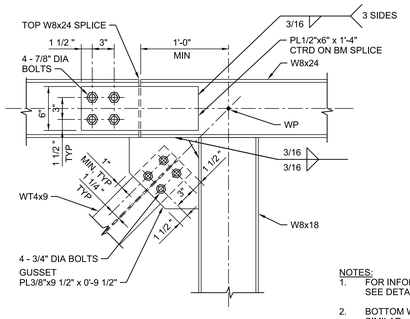

NOTES:
1. FOR INFORMATION NOT SHOWN, SEE DETAIL 5 THIS SHEET.
2. BOTTOM W8x24 SPLICE DETAIL SIMILAR.

BOLTED VERTICAL BRACE AND TOP W8x24 SPLICE DETAIL - ELEVATION

6 OPTIONAL BRIDGE SPLICE DETAIL
1 1/2"=1'-0"

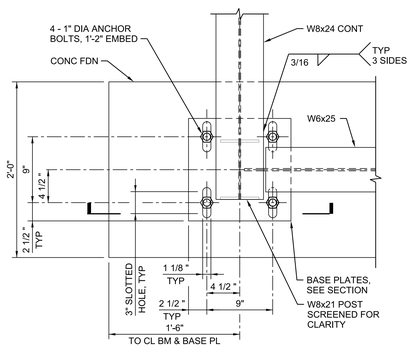

PLAN

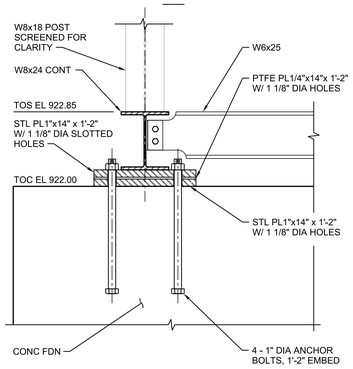

SECTION

2 PIPE SUPPORT BRIDGE BASE PLATE DETAIL
1 1/2"=1'-0"

THIS DRAWING IS LOANED FOR SOLE USE OF THE INTENDED RECIPIENT AND ONLY FOR THE LIMITED PURPOSES FOR WHICH IT WAS PROVIDED. USE BY OTHER ENTITIES OR FOR OTHER PURPOSES IS PROHIBITED AND AT THE USER'S OWN RISK. DRAWINGS ARE TO BE RETURNED UPON REQUEST OF THE FORWARDING RECIPIENT.

PART	REV	DESCRIPTION / REVISION OR ISSUE PURPOSE	DRW	CHKR	DE	DVR	DM	DATE	PE	DATE	WE	AR	CV	ST	HV	EM	FP	PD	EE	IE	M	NP
	0	ISSUED FOR CONSTRUCTION	ILT	AF	HE		LE	06/2017														

REVISION APPROVALS / SQUAD CHECK

RPE: HARRY WILLIAM ELLIOTT, STATE OF TENNESSEE, 6/20/17

DRAWING APPROVALS		DATE
DRW	I LAPINA-TRAUT	06/16/17
CHKR	A FIRTH	06/16/17
DE	H ELLIOTT	06/16/17
DVR		
DM	L ELLIS	06/16/17
PE	Teresa J. Pierce, P.E.	

UCOR URS | CH2M Oak Ridge LLC

OF200 Mercury Treatment Facility
Designed by URS|CH2M Oak Ridge LLC (UCOR) for the Department of Energy
Oak Ridge Office of Environmental Management
under U. S. Government contract DE-SC-0004645

Y-12 National Security Complex managed and operated by Consolidated Nuclear Security, LLC for the Department of Energy under U.S. Government contract DE-NA0001942 • Oak Ridge, Tennessee •

PROJECT NAME: OF200 MERCURY TREATMENT FACILITY

STRUCTURAL
TREATMENT FACILITY
PIPE SUPPORT BRIDGE

USE	DISC	DT	DC	CM	SYSTEM	STAT	SIZE	BLDG	FL	CLASS
3	S	P	B	NC	FAC	AR	E	9410-02	P	U

SH.	OF	TYPE		PART	REV
1	1	DD	S941002-F-0037	000	0

662886

ISSUED FOR CONSTRUCTION

6/22/2017 11:40:45 AM
C941002-F-0037.dgn