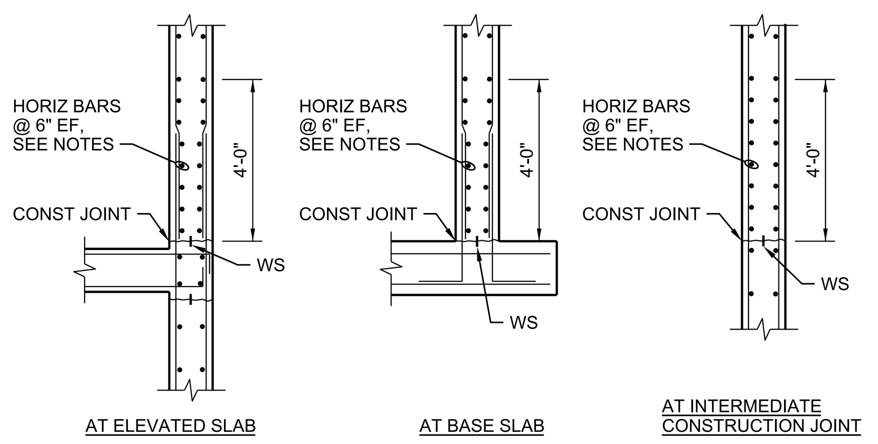

NOTES:

1. PROVIDE HORIZONTAL BARS AT 6" SPACING EACH FACE IN THE FIRST 4'-0" ABOVE ALL HORIZONTAL WALL CONSTRUCTION JOINTS IN LIQUID CONTAINING AND BELOW-GRADE STRUCTURES. WHERE TYPICAL WALL HORIZONTAL BARS ARE AT 12" SPACING, PROVIDE ADDITIONAL BARS FOR 6" SPACING.
2. HORIZONTAL BAR SIZE FOR THE 4'-0" ZONE SHALL BE THE TYPICAL WALL HORIZONTAL BAR SIZE SHOWN ON THE DRAWINGS OR THE MINIMUM BAR SIZE IN THE TABLE BELOW, WHICHEVER IS GREATER.

WALL THICKNESS (INCHES)	MINIMUM BAR SIZE
10	#5
12, 14	#6
16, 18, 20	#7
≥22	#8

3. PROVIDE CORNER BARS AT 6" SPACING EACH FACE TO LAP WITH THE BARS SHOWN ABOVE, SEE (0330-003).

REINFORCING AT HORIZONTAL CONSTRUCTION JOINT

NTS

0330-004

ACI MINIMUM HOOK EMBEDMENT LENGTH	
BAR SIZE	MIN EMBED
#4	7"
#5	9"
#6	11"
#7	12"
#8	14"
#9	16"
#10	17"

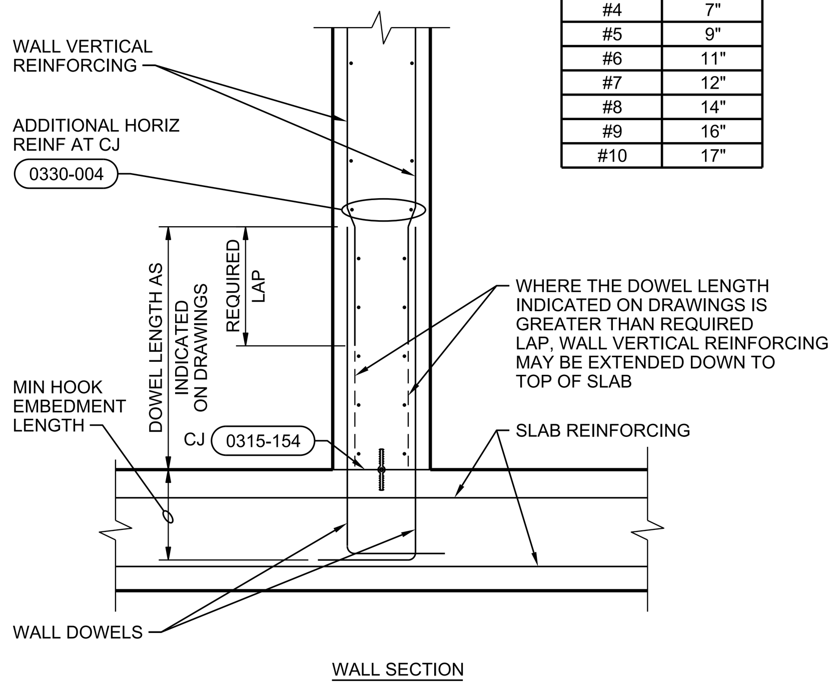

NOTE:

UNLESS NOTED OTHERWISE, ALL DOWEL HOOKS SHALL EXTEND TO AND BE TIED OFF TO BOTTOM MAT OF SLAB REINFORCING.

VERTICAL WALL REINFORCING / DOWEL PLACEMENT

NTS

0330-005

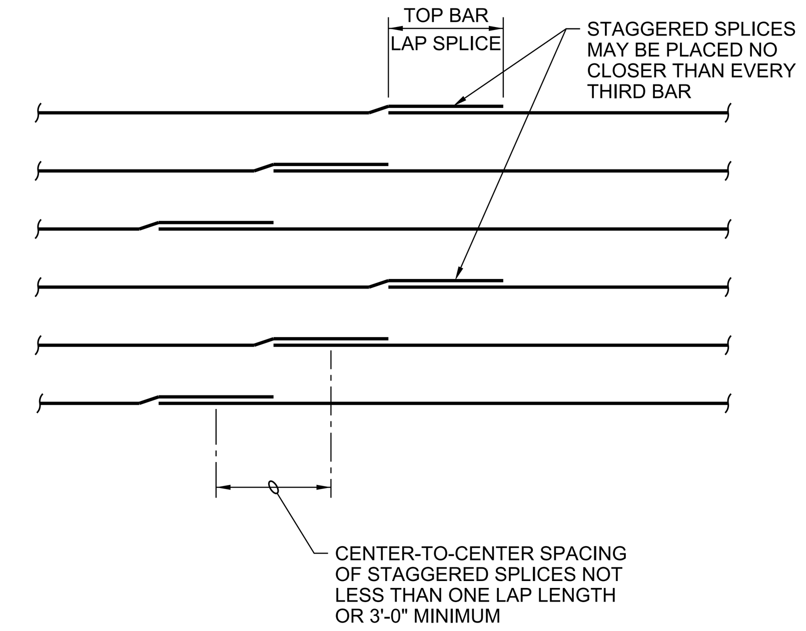

NOTE:

1. VERTICAL BARS NOT SHOWN FOR CLARITY.
2. SPLICES AT EACH FACE OF WALL MAY OCCUR AT SAME LOCATION.

CIRCULAR TANK HORIZONTAL WALL REINFORCING STAGGERED SPLICES

NTS

0330-006

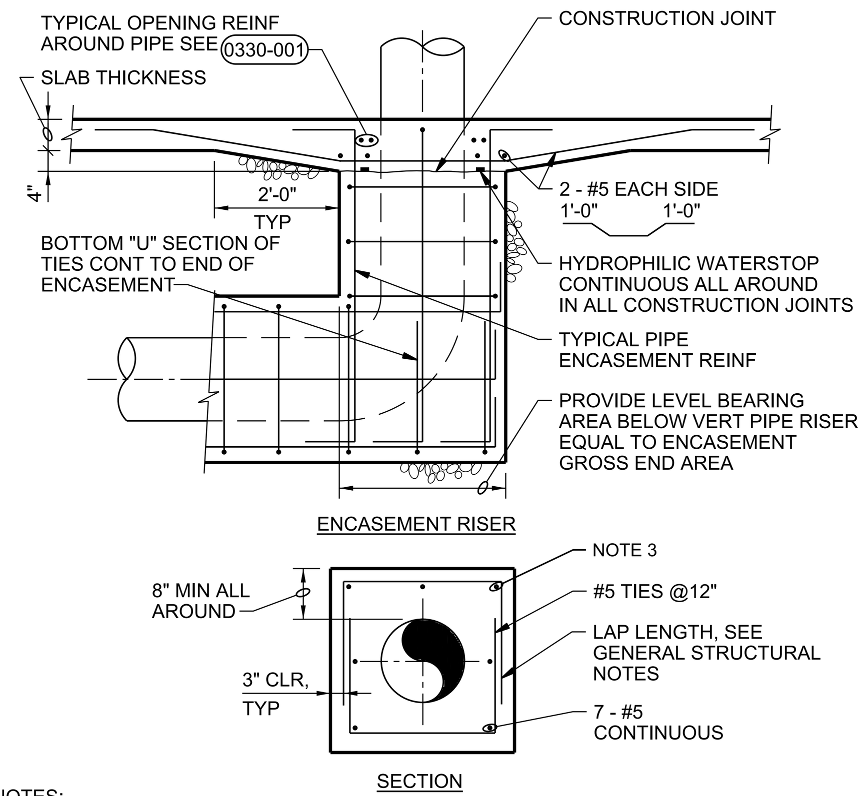

NOTES:

1. SECTION APPLIES TO PIPES W/ DIAMETERS 18" AND SMALLER. FOR 20" DIAMETER PIPES AND LARGER, SEE (0330-017)
2. WHEN PIPE ENCASEMENT IS CLOSER THAN 4" TO SLAB ABOVE, TIE SLAB & ENCASEMENT TOGETHER. SEE (0330-018)
3. WHERE ENCASEMENT CONNECTS TO A CONCRETE WALL, LAP AND HOOK ALL PERIMETER BARS TO FAR SIDE OF WALL.

PIPE ENCASEMENT

NTS

0330-016

PIPE ENCASEMENT TABLE								
PIPE DIA (IN.)	H=10 FEET		H=20 FEET		H=30 FEET		H=40 FEET	
	T (in)	REINF	T (in)	REINF	T (in)	REINF	T (in)	REINF
20 THRU 30	8	#5@12"	10	#5@12"	10	#5@12"	10	#6@12"
36 THRU 42	10	#5@12"	10	#6@12"	10	#7@12"	10	#6@6"
48 THRU 54	10	#6@12"	10	#7@12"	10	#7@6"	12	#7@6"
UP TO 60	10	#6@12"	10	#6@6"	14	#7@6"	14	#7@6"

HEAVY DARK LINE INDICATES BREAK BETWEEN ONE LAYER OF REINFORCING AND TWO. SEE NOTE 2.

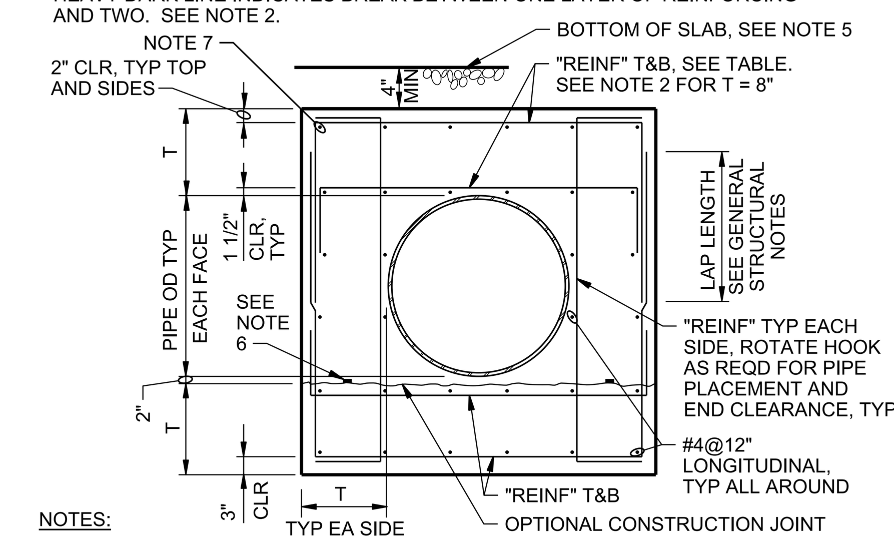

NOTES:

1. THIS DETAIL APPLIES TO PIPE DIAMETER OF 20" AND LARGER. FOR SMALLER THAN 20", SEE DETAIL (0330-016) .
2. FOR T=8" REINFORCING SHALL BE ONE LAYER AND CENTERED IN SLABS OR WALLS. SIM (0330-016) .
3. FOR ENCASEMENT AT PIPE RISER, SEE (0330-016) .
4. "H" IS FILL HEIGHT OR WATER DEPTH OR COMBINATION ABOVE PIPE.
5. WHEN PIPE ENCASEMENT CLOSER THAN 4" TO SLAB ABOVE, TIE SLAB & ENCASEMENT TOGETHER. SEE (0330-018) .
6. HYDROPHILIC WATERSTOP CONTINUOUS ALL AROUND IN ALL CONSTRUCTION JOINTS.
7. WHERE ENCASEMENT CONNECTS TO A CONCRETE WALL, LAP AND HOOK ALL PERIMETER BARS TO FAR SIDE OF WALL.

PIPE ENCASEMENT

NTS

0330-017

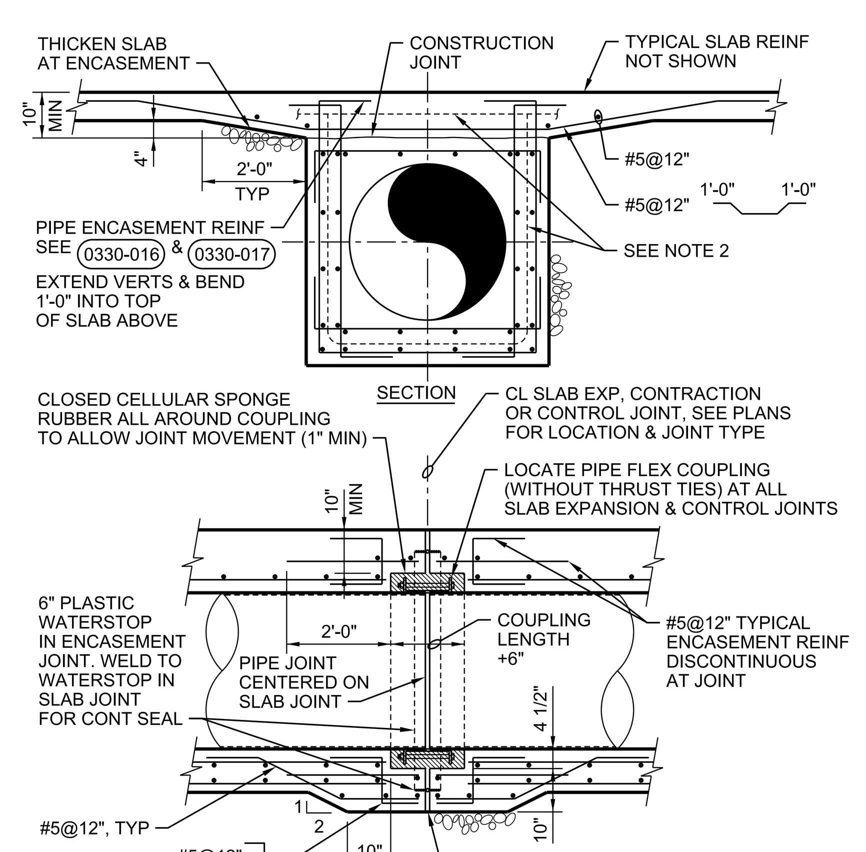

NOTES:

1. TIE PIPE ENCASEMENT TO SLAB AS SHOWN WHEN DISTANCE BETWEEN PIPE ENCASEMENT AND BOTTOM OF SLAB IS LESS THAN 4".
2. 6" PLASTIC WS IN ENCASEMENT JOINTS. WELD TO WS IN SLAB JOINTS.

PIPE ENCASEMENT AT SLAB

NTS

0330-018

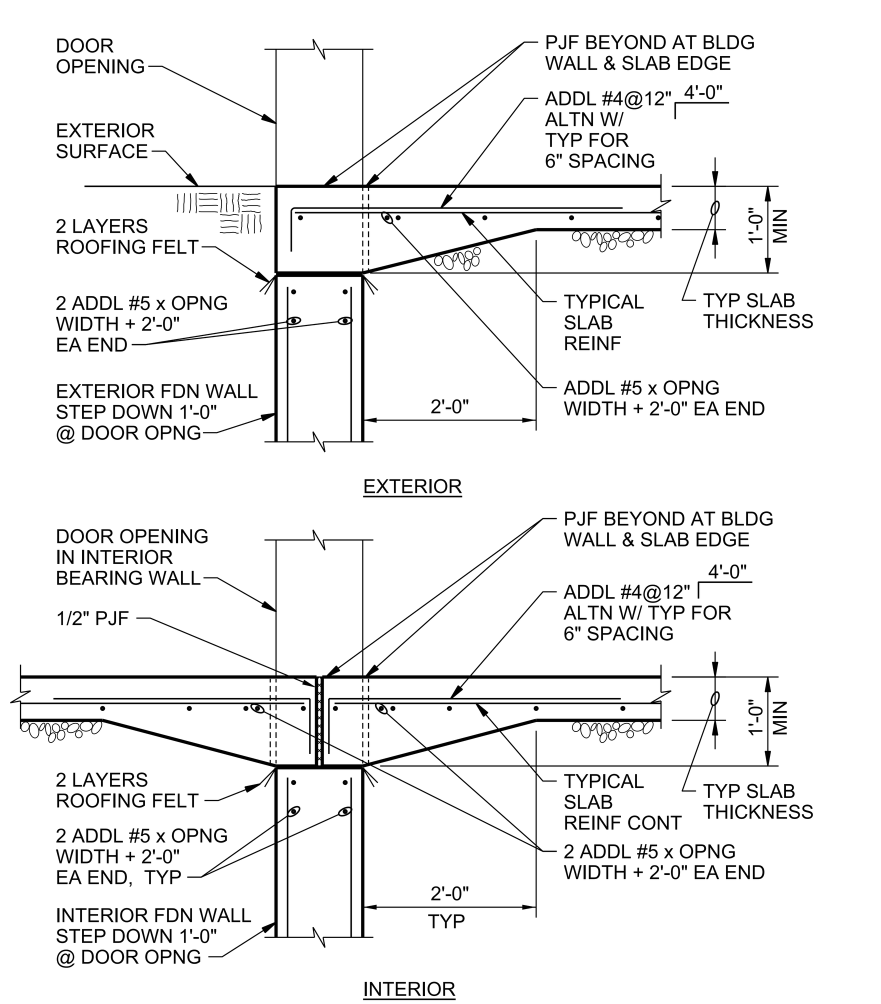

SLAB AT DOOR OPENING

NTS

0330-041

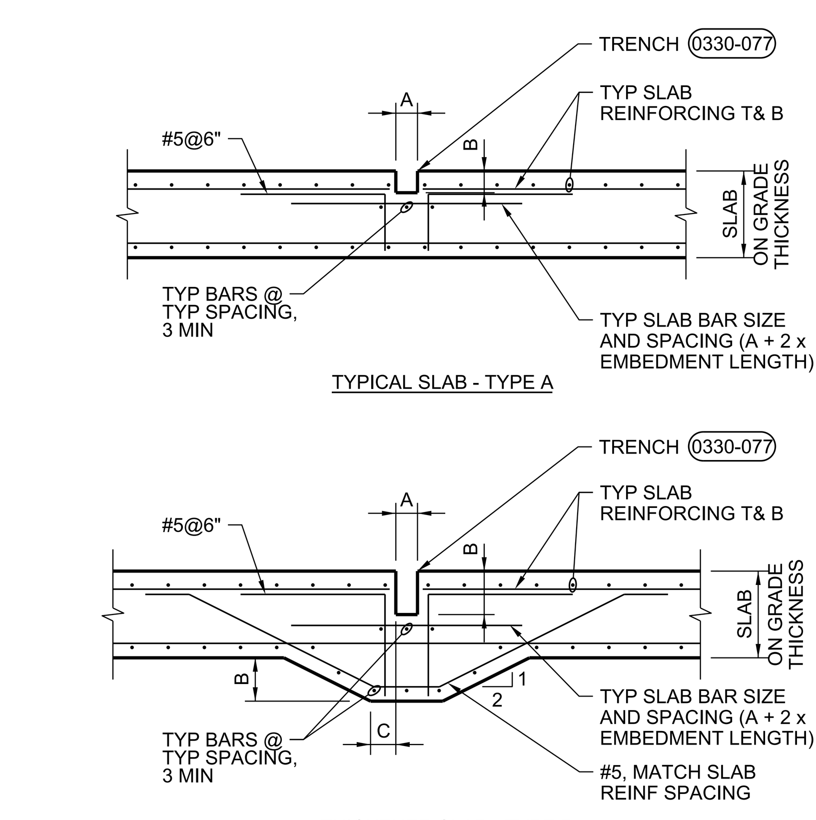

DIMENSIONS:

A = TRENCH WIDTH:	SEE PLANS
B = TRENCH DEPTH:	SEE PLANS
C = 6" WHEN:	A < 1'-0"
C = 1'-0" WHEN:	A ≥ 1'-0"

TRENCH REINFORCING

NTS

0330-043

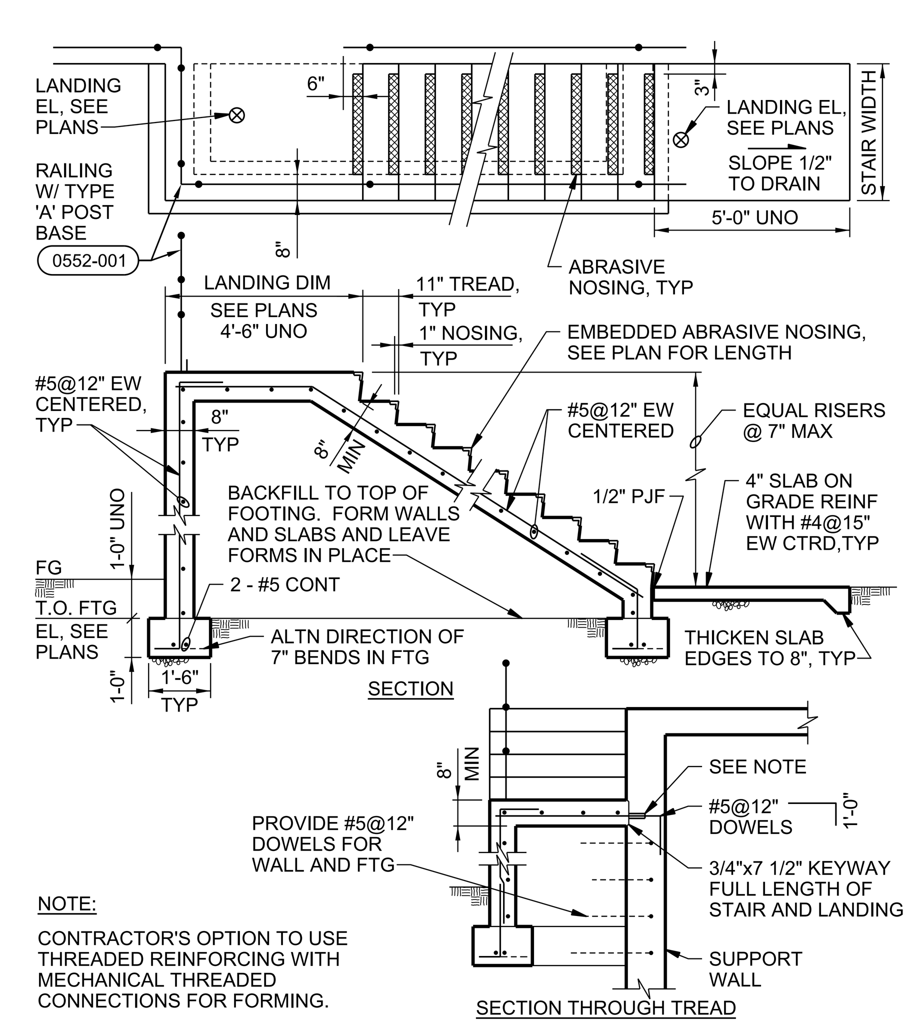

NOTE:

CONTRACTOR'S OPTION TO USE THREADED REINFORCING WITH MECHANICAL THREADED CONNECTIONS FOR FORMING.

CONCRETE STAIR - WITH CLOSURE WALL

NTS

0330-048

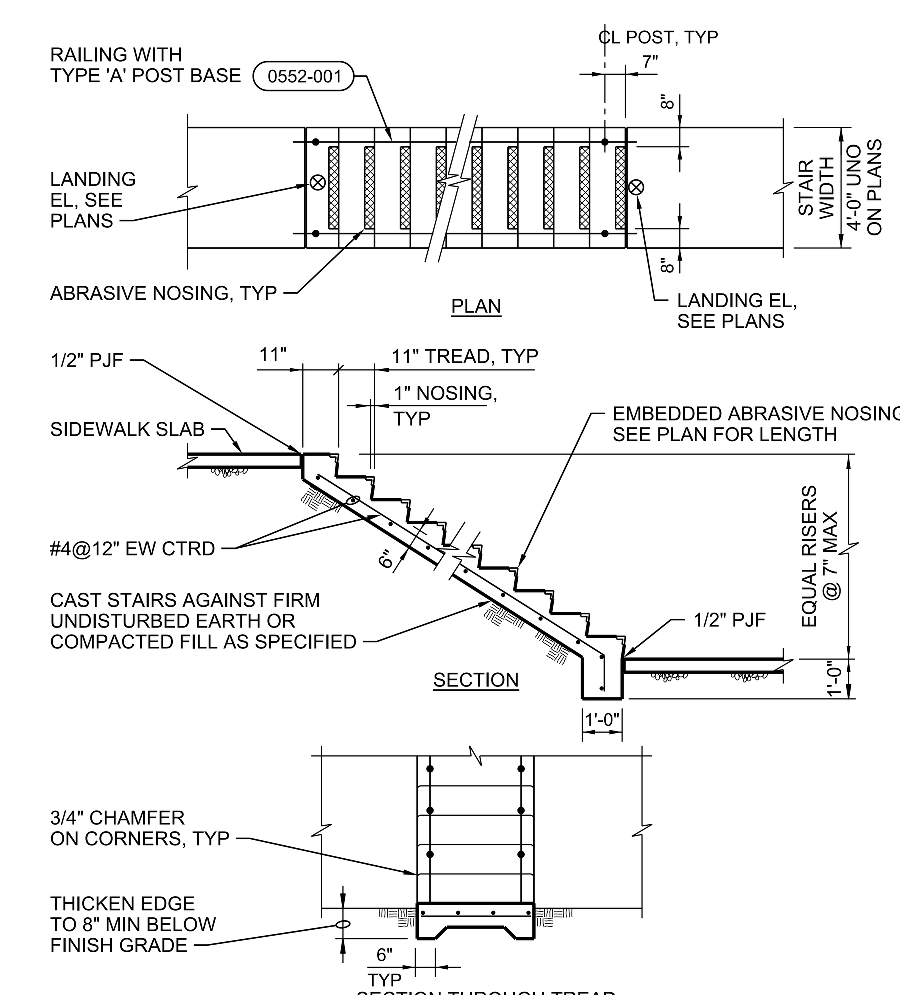

CONCRETE STAIR - ON GRADE

NTS

0330-049

THIS DRAWING IS LOANED FOR SOLE USE OF THE INTENDED RECIPIENT AND ONLY FOR THE LIMITED PURPOSES FOR WHICH IT WAS PROVIDED. USE BY OTHER ENTITIES OR FOR OTHER PURPOSES IS PROHIBITED AND AT THE USER'S OWN RISK. DRAWINGS ARE TO BE RETURNED UPON REQUEST OF THE FORWARDING RECIPIENT.

PART	REV	DESCRIPTION	DRW	CHKR	DE	DVR	DM	DATE	PE	DATE
	0	ISSUED FOR CONSTRUCTION	RM	AF	HE		LE	06/2017		

REVISION OR ISSUE PURPOSE — REVISION APPROVALS

SQUAD CHECK: WE AR CV ST HV EM FP PD EE IE M NP

RPE

REV. DATE

DRAWING APPROVALS		DATE
DRW	R MARKEN	06/16/17
CHKR	A FIRTH	06/16/17
DE	H ELLIOTT	06/16/17
DVR		
DM	L ELLIS	06/16/17
PE	Teresa J. Pierce, P.E.	

UCOR
URS | CH2M
Oak Ridge LLC

OF200 Mercury Treatment Facility
Designed by URS|CH2M Oak Ridge LLC (UCOR) for the Department of Energy
Oak Ridge Office of Environmental Management
under U. S. Government contract DE-SC-0004645

Y-12 National Security Complex managed and operated by Consolidated Nuclear Security, LLC for the Department of Energy under U.S. Government contract DE-NA0001942
Oak Ridge, Tennessee

PROJECT NAME:

OF200 MERCURY TREATMENT FACILITY

STRUCTURAL STANDARD DETAILS - SHEET 3 OF 12

USE	DISC	DT	DC	CM	SYSTEM	STAT	SIZE	BLDG	FL	CLASS
3	S	DT	X	NC	FAC	AR	E	9410-02	S	U

SH.	OF	TYPE	DRAWING NO.	PART	REV
3	12	DD	S941002-F-0047	000	0

662886

ISSUED FOR CONSTRUCTION