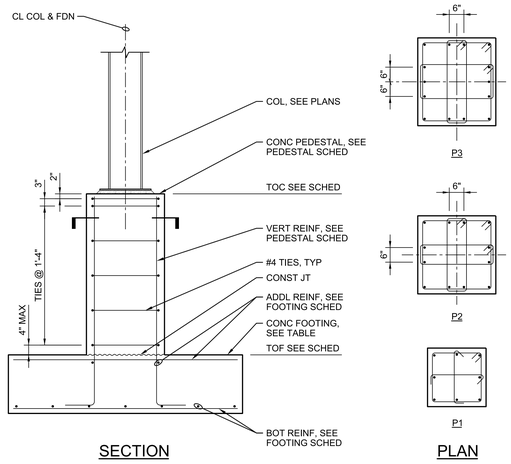

FOOTING SCHEDULE				
TYPE	SIZE	TOP OF FOOTING ELEVATION	BOTTOM REINFORCING	ADDITIONAL REINFORCING
F1	5'-0" SQ x 1'-6" THICK	922.50	#5@12" EW	2- #6 EW, TOP
F2	6'-0" SQ x 2'-0" THICK	922.50	#5@12" EW	2- #6 EW, TOP
F3	8'-0" SQ x 2'-0" THICK	922.50	#6@12" EW	2- #6 EW, T&B
F4	10'-0" SQ x 2'-0" THICK	922.50	#7@12" EW	#7@12" EW
F5*	5'-0" x 2'-0" THICK x REQD	922.50	-	-
F6*	5'-4" x 2'-0" THICK x REQD	922.50	-	-

NOTE:
(*) FOR CONCRETE FOOTING WALL REINFORCING, SEE SECTIONS ON DRAWINGS S941002-F-0019 AND S941002-F-0023.

PEDESTAL SCHEDULE			
TYPE	SIZE	TOP OF PEDESTAL ELEVATION	VERTICAL REINFORCING
P1	2'-0" SQ	928.00	8- #8
P2	2'-8" SQ	928.00	12- #8
P3	3'-0" x 2'-8"	928.00	14- #8

1 COLUMN FOUNDATION DETAILS
NTS

S941002-F-0002
S941002-F-0003
S941002-F-0004
S941002-F-0005

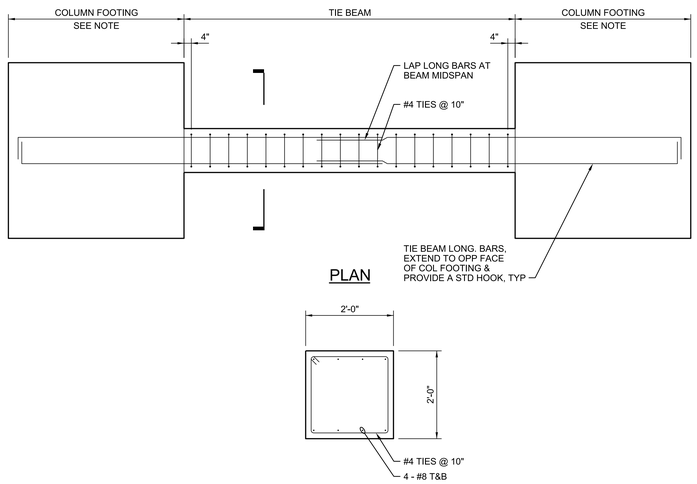

NOTE:
FOR CONCRETE FOOTING SIZE AND REINFORCING, SEE 1

2 TIE BEAM DETAIL
NTS

S941002-F-0002
S941002-F-0003
S941002-F-0004
S941002-F-0005

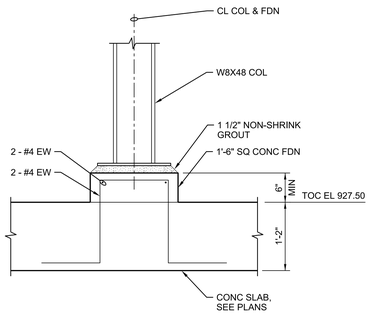

3 COLUMN FOUNDATION DETAIL
1"=1'-0"

S941002-F-0011

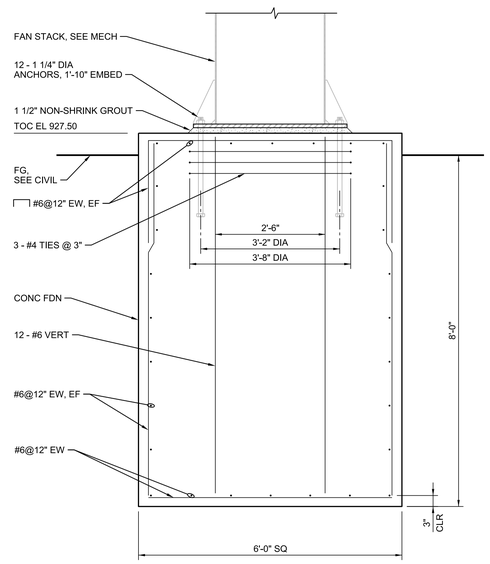

4 VENT STACK FOUNDATION DETAIL
3/4"=1'-0"

S941002-F-0003
S941002-F-0009

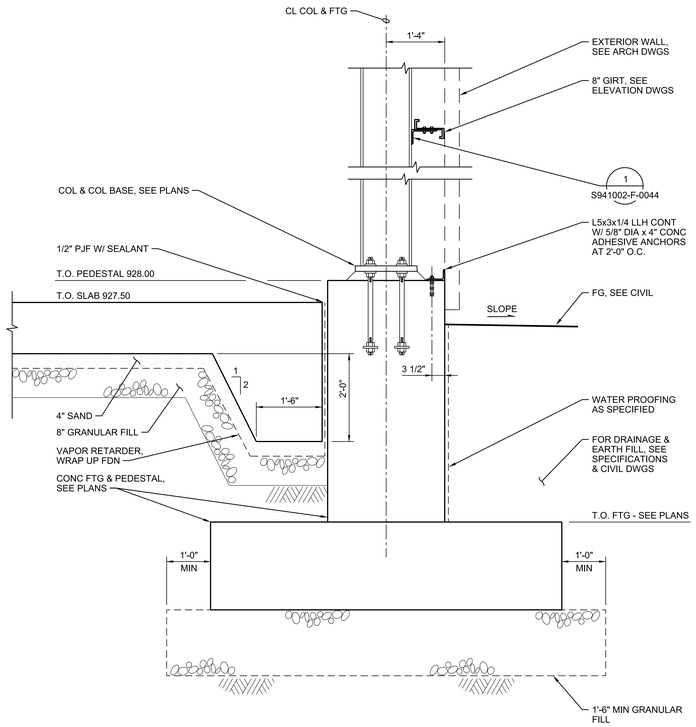

5 SECTION AT COLUMN FOOTING
3/4"=1'-0"

S941002-F-0019
S941002-F-0020
S941002-F-0021
S941002-F-0022
S941002-F-0024
S941002-F-0026

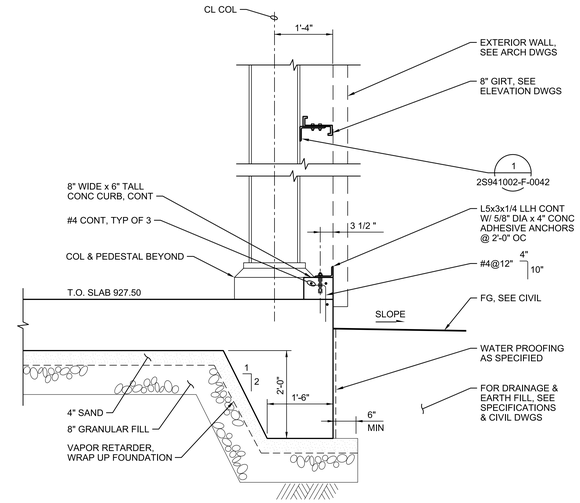

6 SECTION AT SLAB EDGE
3/4"=1'-0"

S941002-F-0019
S941002-F-0020
S941002-F-0021
S941002-F-0022
S941002-F-0024
S941002-F-0026

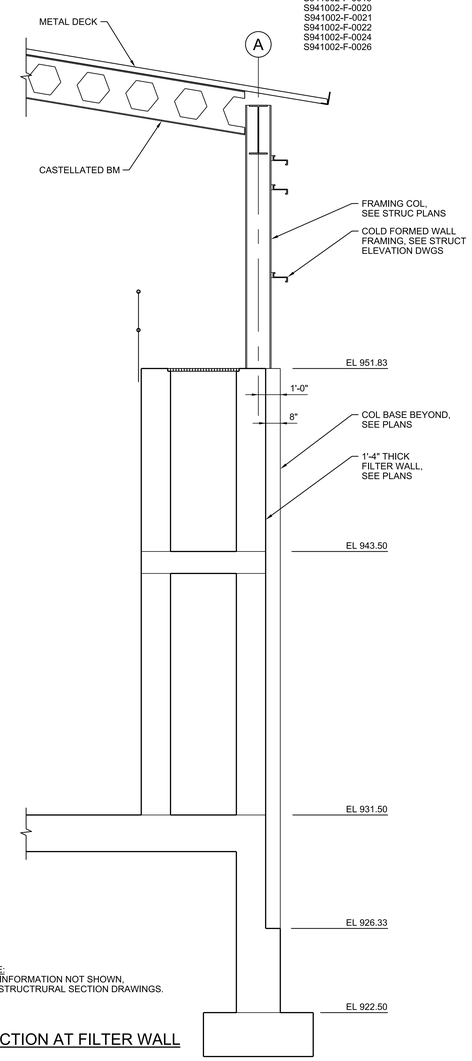

NOTE:
FOR INFORMATION NOT SHOWN, SEE STRUCTRURAL SECTION DRAWINGS.

SECTION AT FILTER WALL

7 DETAIL
3/8"=1'-0"

S941002-F-0014

THIS DRAWING IS LOANED FOR SOLE USE OF THE INTENDED RECIPIENT AND ONLY FOR THE LIMITED PURPOSES FOR WHICH IT WAS PROVIDED. USE BY OTHER ENTITIES OR FOR OTHER PURPOSES IS PROHIBITED AND AT THE USER'S OWN RISK. DRAWINGS ARE TO BE RETURNED UPON REQUEST OF THE FORWARDING RECIPIENT.

PART	REV	DESCRIPTION	DRW	CHKR	DE	DVR	DM	DATE
	0	ISSUED FOR CONSTRUCTION	ILT	AF	HE		LE	06/2017

REVISION OR ISSUE PURPOSE — REVISION APPROVALS — SQUAD CHECK: WE AR CV ST HV EM FP PD EE IE M NP

RPE: WILLIAM PIERCE, STATE OF TENNESSEE, 6/30/17

DRAWING APPROVALS		DATE
DRW	I LAPINA-TRAUT	06/16/17
CHKR	A FIRTH	06/16/17
DE	H ELLIOTT	06/16/17
DVR		
DM	L ELLIS	06/16/17
PE	Teresa J. Pierce, P.E.	

UCOR URS | CH2M Oak Ridge LLC

OF200 Mercury Treatment Facility
Designed by URS|CH2M Oak Ridge LLC (UCOR) for the Department of Energy
Oak Ridge Office of Environmental Management
under U. S. Government contract DE-SC-0004645

Y-12 National Security Complex managed and operated by Consolidated Nuclear Security, LLC for the Department of Energy under U.S. Government contract DE-NA0001942
« Oak Ridge, Tennessee »

PROJECT NAME:
OF200 MERCURY TREATMENT FACILITY

STRUCTURAL
TREATMENT FACILITY
CONCRETE DETAILS

USE	DISC	DT	DC	CM	SYSTEM	STAT	SIZE	BLDG	FL	CLASS
3	S	S	C	NC	FAC	AR	E	9410-02	S	U

SH.	OF	TYPE		PART	REV
1	1	DD	S941002-F-0039	000	0

662886

ISSUED FOR CONSTRUCTION

6/22/2017 11:34:33 AM