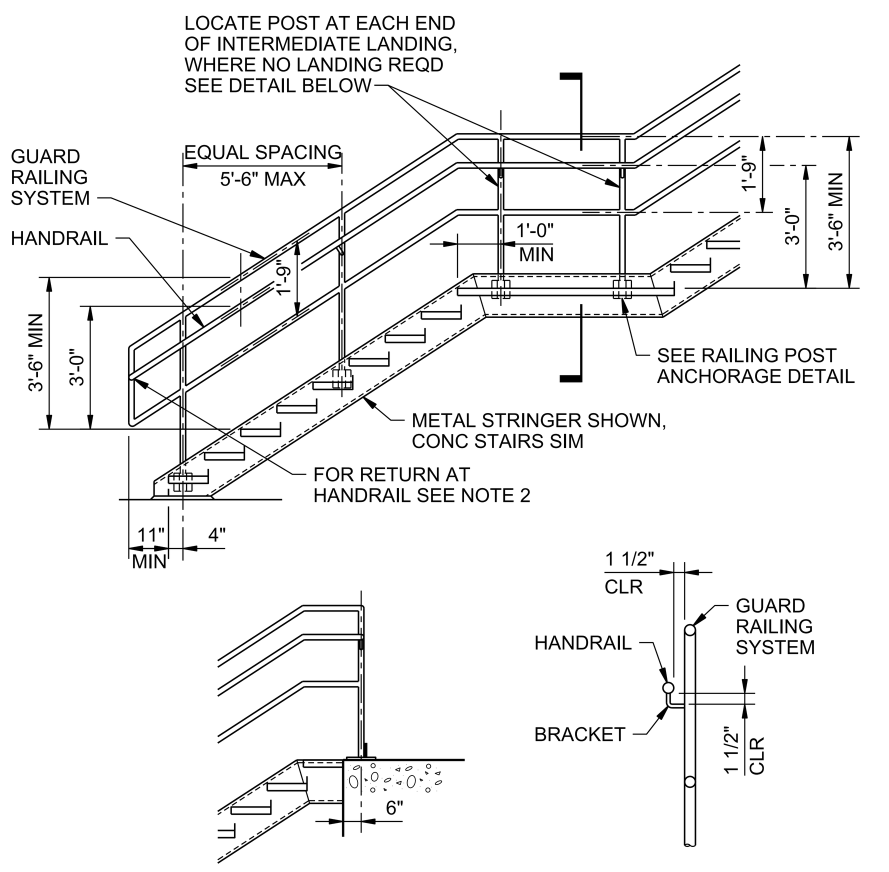

NOTES:
1. PROVIDE TOE BOARD AT LANDING WHERE REQUIRED.
2. RETURN ENDS OF HANDRAIL TO GUARD AT BOTH ENDS.

RAILING - 2 RAIL STAIR - STEEL (IBC)

NTS

DETAIL 3 OF 7

0552-041

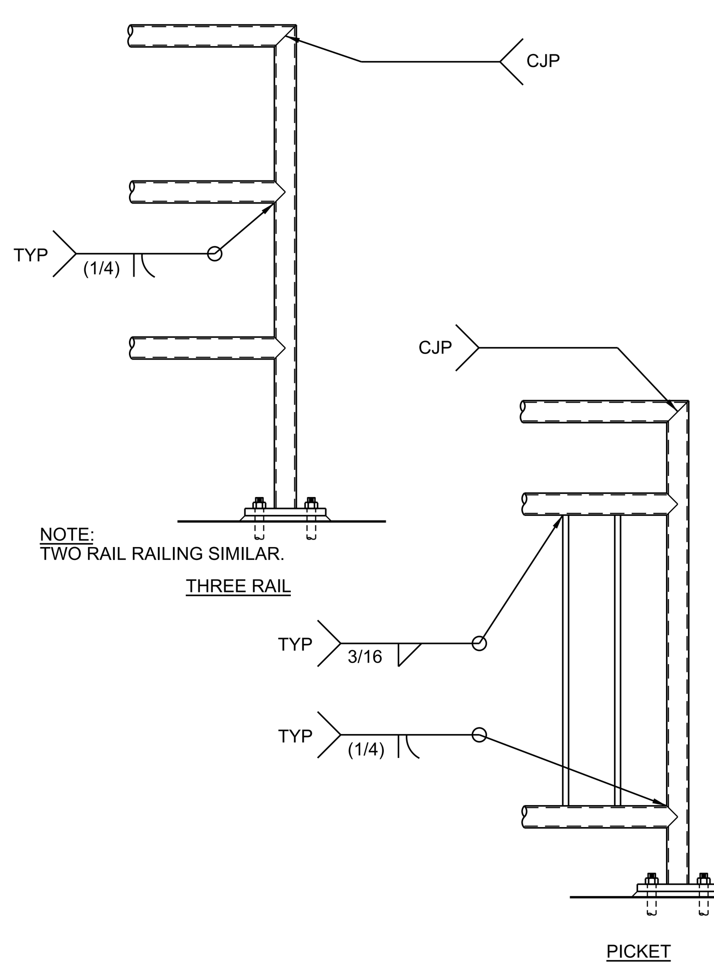

RAILING POST WELDED CONNECTION - STEEL

NTS

DETAIL 4 OF 7

0552-041

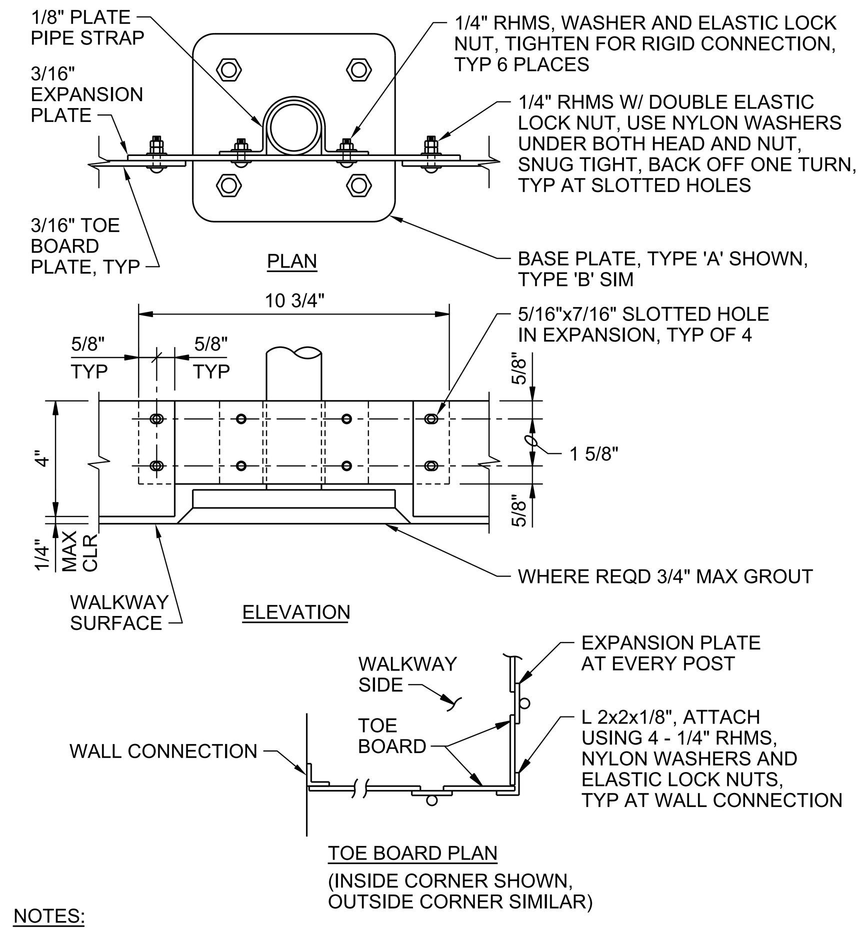

NOTES:
1. TOE BOARD TO BE MOUNTED ON WALKWAY SIDE OF RAILING.
2. RHMS = ROUND HEAD MACHINE SCREW.

RAILING TOE BOARD - STEEL

NTS

DETAIL 5 OF 7

0552-041

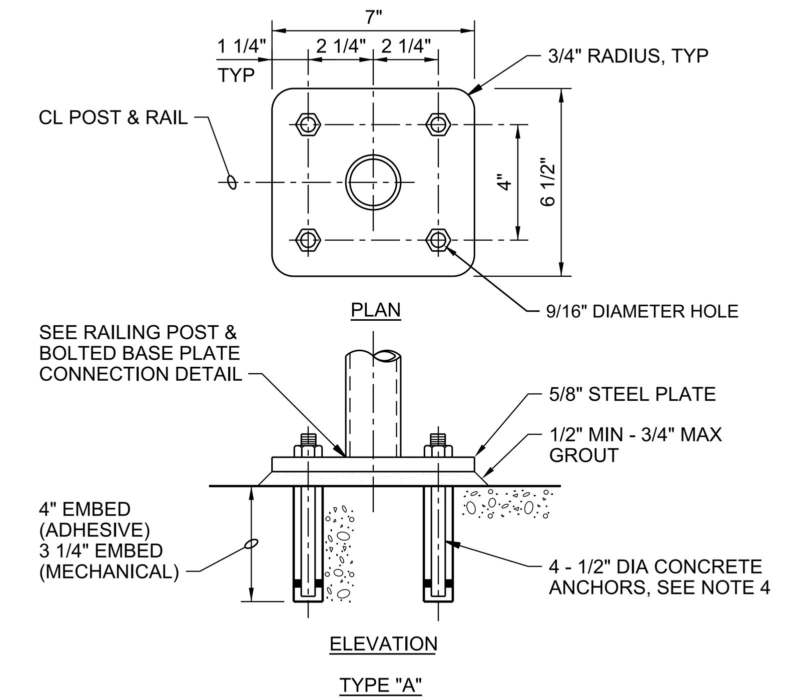

NOTES:
1. DO NOT CUT REINFORCING WITHOUT PRIOR CONSENT FROM ENGINEER.
2. ANCHORAGE TO 4000 PSI CONCRETE CURB: 6" MINIMUM CURB HEIGHT, 10" MINIMUM CURB WIDTH. CENTER BASE ON CURB.
3. PROVIDE PROTECTION FOR DISSIMILAR METALS AND CONCRETE PER SPECIFICATIONS.
4. CONCRETE ANCHOR SIZE AND EMBEDMENTS CALCULATED FOR HILTI ADHESIVES, RE-500-SD AND HY 150-MAX-SD, AND HILTI MECHANICAL ANCHORS KB3 AND KBTZ. IF ALTERNATE ANCHOR SYSTEM IS USED, CONTRACTOR SUBMIT STAMPED CALCULATIONS AND DRAWINGS.

RAILING POST ANCHORAGE TYPE A - STEEL

NTS

DETAIL 6 OF 7

0552-041

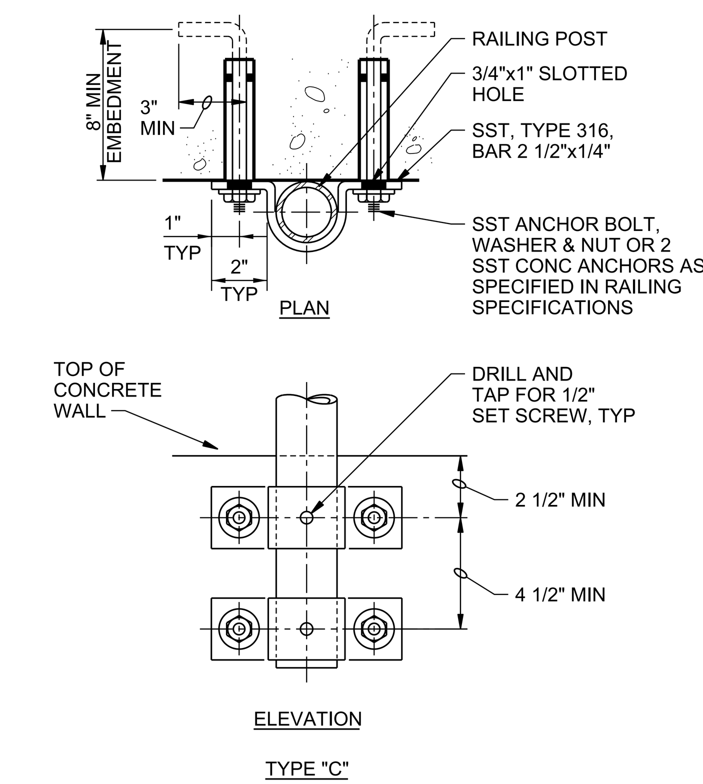

NOTES:
1. PROVIDE PROTECTION FOR DISSIMILAR METALS AND CONCRETE PER SPECIFICATIONS.
2. USE BENT BAR 2 1/2"x1/4" AS A TEMPLATE FOR SETTING BOLTS.

RAILING POST ANCHORAGE TYPE C - GALV STEEL

NTS

DETAIL 7 OF 7

0552-041

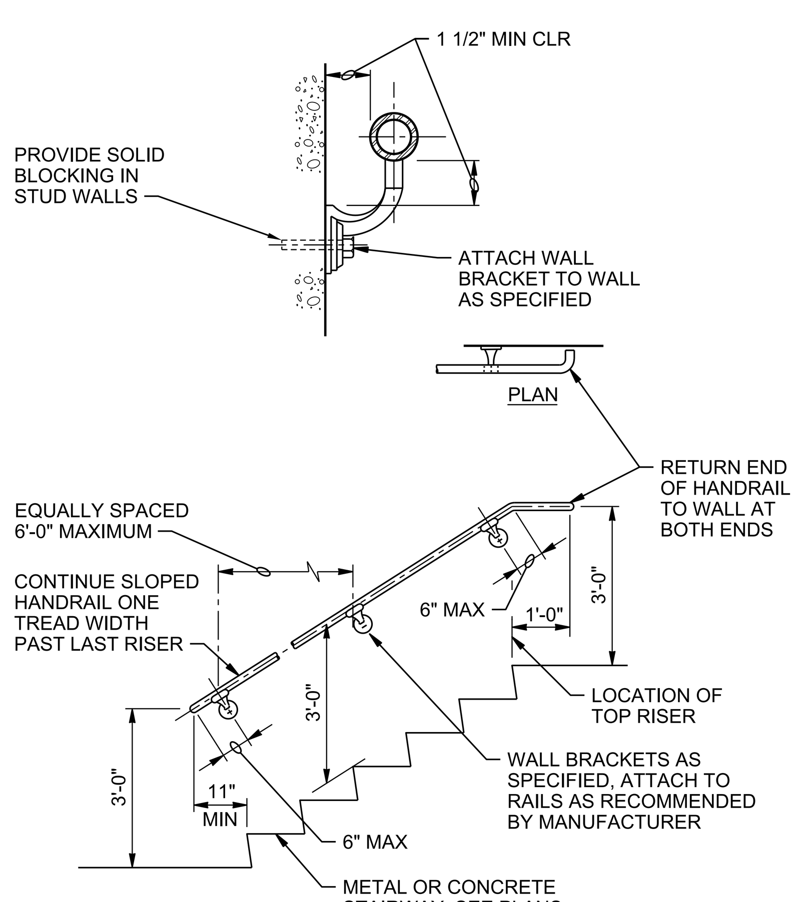

NOTE:
HOT-DIP GALVANIZE STEEL RAILING AFTER FABRICATION.

WALL HANDRAIL - STEEL

NTS

0552-042

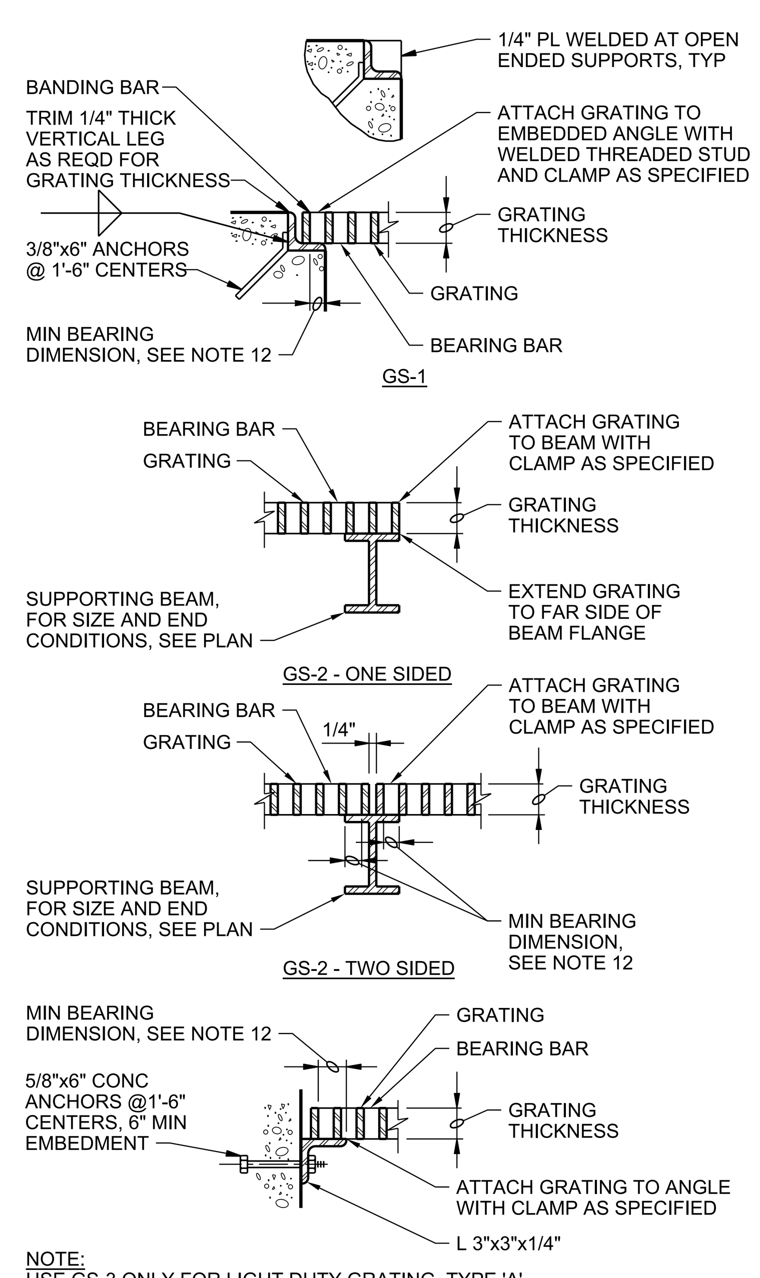

NOTE:
USE GS-3 ONLY FOR LIGHT DUTY GRATING, TYPE 'A'.

GS-3

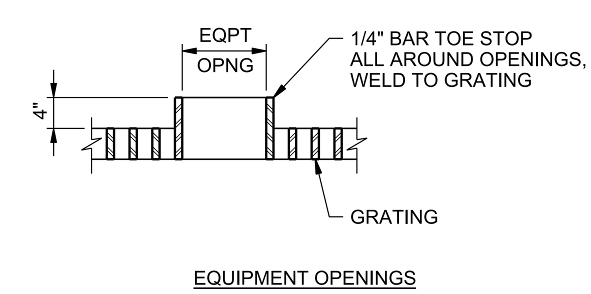

EQUIPMENT OPENINGS

GENERAL NOTES:
1. GRATING SHALL BE LIGHT DUTY GRATING UNLESS OTHERWISE NOTED ON DRAWINGS.
2. GRATING SPAN ⟷ SEE PLAN.
3. INDIVIDUAL GRATING SECTIONS SHALL NOT EXCEED 3'-0" IN WIDTH OR WEIGH MORE THAN 150 POUNDS, UNLESS INDICATED OTHERWISE, FOR TYPES 'A' & 'B' GRATING. TYPE 'C' GRATING SHALL HAVE A MINIMUM WIDTH OF 2'-0" REGARDLESS OF WEIGHT.
4. SHOP DRAWINGS BASED ON FIELD DIMENSIONS SHALL BE SUBMITTED TO THE ENGINEER PRIOR TO FABRICATION.
5. MATERIAL FOR SUPPORTS OF STEEL AND ALUMINUM GRATING TO BE SAME AS GRATING, EXCEPT METAL SUPPORTS THAT ARE TO BE EMBEDDED IN CONCRETE SHALL BE TYPE 316 STAINLESS STEEL.
6. UNLESS NOTED OTHERWISE ON PLANS, GRATING THICKNESS SHALL BE AS TABULATED IN "GRATING THICKNESS TABLE" FOR APPLICABLE GRATING TYPE.
7. FOR SERRATED BEARING BARS, INCREASE GRATING THICKNESSES SHOWN IN TABLES BY 1/4".
8. BEARING BAR THICKNESS FOR GRATING TO BE 3/16" MINIMUM. SEE SPECIFICATIONS FOR SPACING OF BEARING AND CROSS BARS.
9. BAND ALL EDGES. MATCH DEPTH OF BEARING BAR.
10. TYPE OF MATERIAL USED SHALL BE AS SHOWN ON PLANS OR AS SPECIFIED. THIS STANDARD DETAIL INCLUDES 2 TYPES, ALTHOUGH BOTH MAY NOT BE INCLUDED IN PROJECT.
11. THE HORIZONTAL CLEARANCE BETWEEN THE GRATING AND GRATING SUPPORTS SHALL NOT BE LESS THAN 1/4" NOR GREATER THAN 1/2" AND AS SPECIFIED.
12. FOR TYPE A & B MIN BEARING HORIZONTAL DIMENSION = 1" FOR GRATING DEPTH 2 1/4" OR LESS, MIN BEARING HORIZONTAL = 2" FOR GRATING DEPTH GREATER THAN 2 1/4"

LIGHT DUTY GRATING
TYPE 'A'
(100 PSF)

GRATING THICKNESS TABLE

MAXIMUM SPAN	STEEL	ALUMINUM
3'-6"	1"	1 1/4"
4'-0"	1"	1 1/2"
4'-6"	1"	1 3/4"
5'-0"	1 1/4"	1 3/4"
5'-6"	1 1/4"	2"
6'-0"	1 1/2"	2 1/4"
6'-6"	1 1/2"	2 1/4"
7'-0"	1 3/4"	2 1/2"

MEDIUM DUTY GRATING
TYPE 'B'
(500 PSF)

GRATING THICKNESS TABLE

MAXIMUM SPAN	STEEL	ALUMINUM
< 2'-0"	1"	1"
2'-6"	1"	1 1/4"
3'-0"	1 1/4"	1 1/2"
3'-6"	1 1/4"	1 3/4"
4'-0"	1 1/2"	2"
4'-6"	1 3/4"	2 1/4"
5'-0"	1 3/4"	2 1/2"
5'-6"	2"	DO NOT USE ALUMINUM GRATING
6'-0"	2 1/4"	
6'-6"	2 1/2"	

HEAVY DUTY GRATING
TYPE 'C'
(H 20 WHEEL LOAD)

GRATING THICKNESS TABLE

MAXIMUM SPAN	STEEL	ALUMINUM
1'-0"	2"x3/16"	DO NOT USE ALUMINUM GRATING
1'-8"	2 1/2"x1/4"	
2'-0"	2 1/2"x3/8" OR 3"x1/4"	
2'-6"	3"x3/8" OR 4"x1/4"	
3'-3"	3 1/2"x3/8"	
4'-0"	4"x3/8"	
5'-0"	4 1/2"x3/8"	

STANDARD GRATING

NTS

0553-001

THIS DRAWING IS LOANED FOR SOLE USE OF THE INTENDED RECIPIENT AND ONLY FOR THE LIMITED PURPOSES FOR WHICH IT WAS PROVIDED. USE BY OTHER ENTITIES OR FOR OTHER PURPOSES IS PROHIBITED AND AT THE USER'S OWN RISK. DRAWINGS ARE TO BE RETURNED UPON REQUEST OF THE FORWARDING RECIPIENT.

PART	REV	DESCRIPTION	DRW	CHKR	DE	DVR	DM	DATE
	0	ISSUED FOR CONSTRUCTION	RM	AF	HE		LE	06/2017

REVISION OR ISSUE PURPOSE — REVISION APPROVALS (PE, DATE) — SQUAD CHECK (WE, AR, CV, ST, HV, EM, FP, PD, EE, IE, M, NP)

RPE — REV. DATE

DRW	R MARKEN	06/16/17
CHKR	A FIRTH	06/16/17
DE	H ELLIOTT	06/16/17
DVR		
DM	L ELLIS	06/16/17
PE	Teresa J. Pierce, P.E.	

DRAWING APPROVALS — DATE

UCOR URS | CH2M Oak Ridge LLC
OF200 Mercury Treatment Facility
Designed by URS|CH2M Oak Ridge LLC (UCOR) for the Department of Energy Oak Ridge Office of Environmental Management under U. S. Government contract DE-SC-0004645

Y-12 National Security Complex managed and operated by Consolidated Nuclear Security, LLC for the Department of Energy under U.S. Government contract DE-NA0001942 • Oak Ridge, Tennessee •

PROJECT NAME:
OF200 MERCURY TREATMENT FACILITY

STRUCTURAL
STANDARD DETAILS - SHEET 11 OF 12

USE	DISC	DT	DC	CM	SYSTEM	STAT	SIZE	BLDG	FL	CLASS
3	S	DT	X	NC	FAC	AR	E	9410-02	S	U

SH.	OF	TYPE		PART	REV
11	12	DD	S941002-F-0055	000	0

662886

ISSUED FOR CONSTRUCTION

6/22/2017 11:29:40 AM
S941002-F-0055.dgn