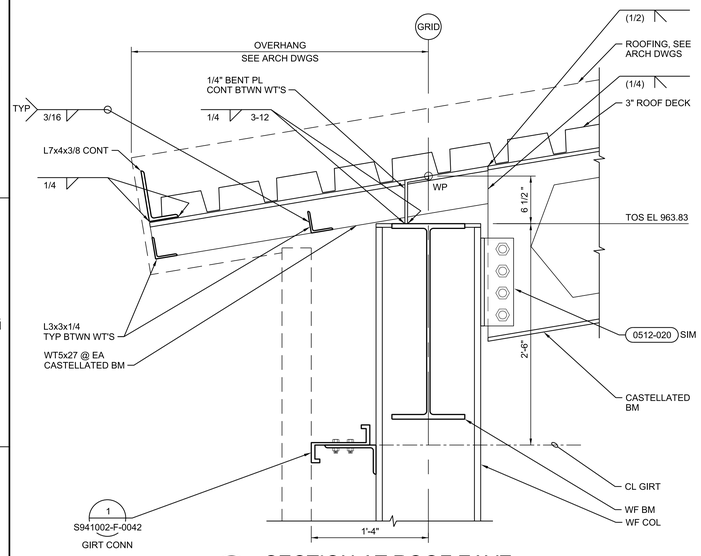

1 SECTION AT ROOF EAVE

1 1/2"=1'-0"

S941002-F-0016
S941002-F-0019
S941002-F-0020
S941002-F-0021
S941002-F-0022
S941002-F-0024

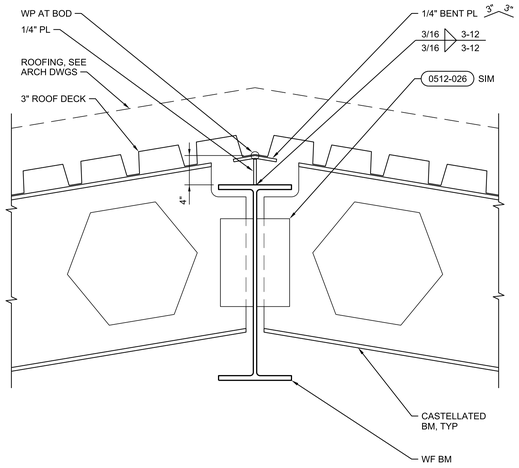

4 ROOF RIDGE DETAIL

1 1/2"=1'-0"

S941002-F-0016
S941002-F-0019
S941002-F-0020
S941002-F-0021
S941002-F-0024
S941002-F-0026

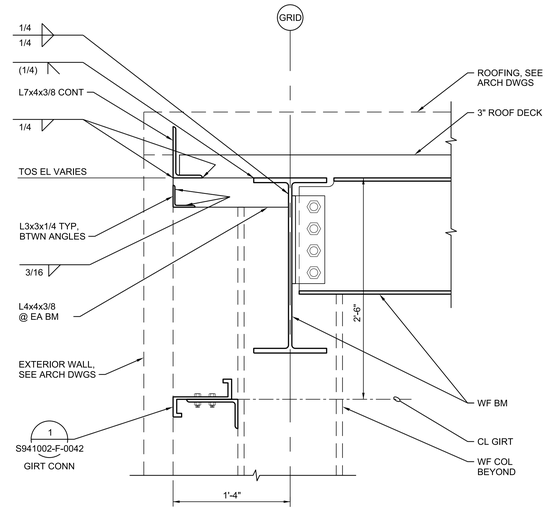

7 SECTION AT ROOF RAKE

1 1/2"=1'-0"

S941002-F-0016
S941002-F-0022

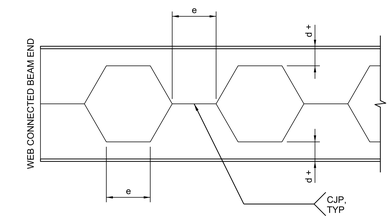

CASTELLATED BEAM SCHEDULE				
CASTELLATED BEAM	FABRICATED FROM	e MIN (IN)	e MAX (IN)	d + (IN)
CB 24x45	W16x45	3.00	10.25	4.00
CB 24x67	W16x67	3.00	11.75	4.25
CB 30x50	W21x50	3.00	11.25	6.00
CB 30x122	W21x122	5.25	8.50	6.25
CB 30x132	W21x132	5.50	7.00	7.00

9 CASTELLATED BEAM DETAIL

NTS

S941002-F-0014
S941002-F-0015

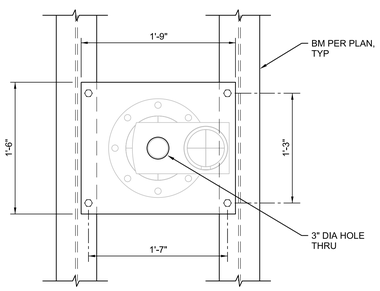

2 OPENING AT DECHLOR TANKS

1 1/2"=1'-0"

S941002-F-0013
S941002-F-0017

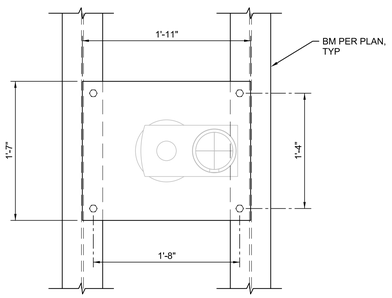

5 OPENING AT FLOC TANKS

1 1/2"=1'-0"

S941002-F-0013
S941002-F-0017

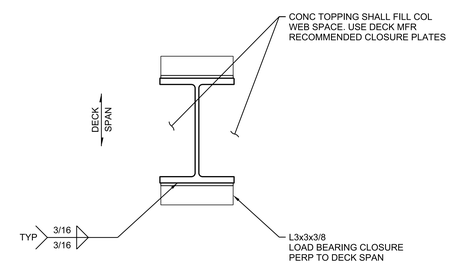

CONCRETE-TOPPED DECK - COLUMN CLOSURE

8 NTS

S941002-F-0014
S941002-F-0015

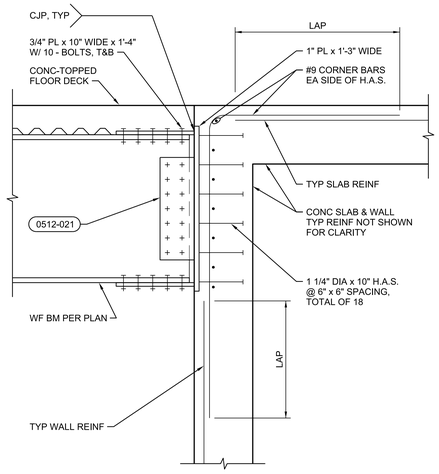

10 COLLECTOR BEAM TO CONCRETE

1"=1'-0"

S941002-F-0014

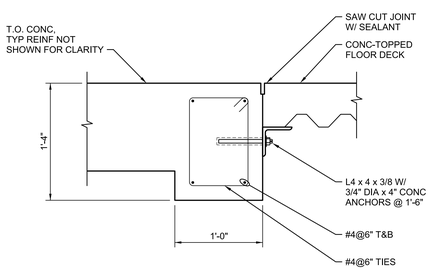

3 FLOOR DECK TO CONCRETE

1 1/2"=1'-0"

S941002-F-0014
S941002-F-0022

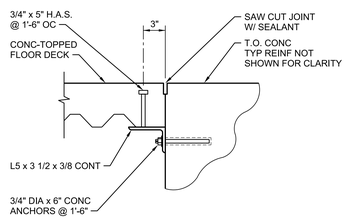

6 FLOOR DECK TO CONCRETE

1 1/2"=1'-0"

S941002-F-0014
S941002-F-0015

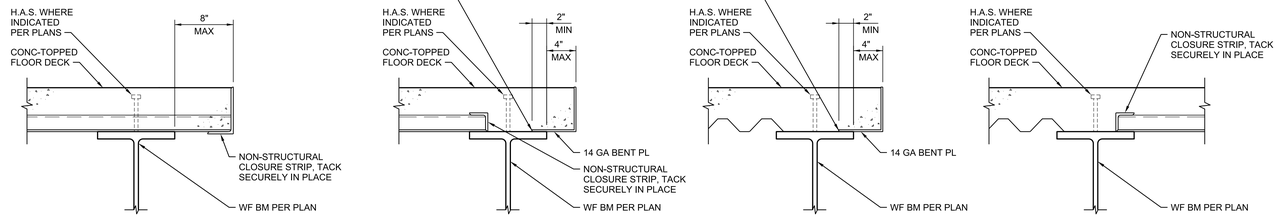

DECK PERPENDICULAR TO BEAM - OPTION 1 | DECK PERPENDICULAR TO BEAM - OPTION 2 | DECK PARALLEL TO BEAM | DECK DIRECTION CHANGE

11 FLOOR DECK CLOSURES

NTS

S941002-F-0014
S941002-F-0015

UCOR
URS | CH2M
Oak Ridge LLC

OF200 Mercury Treatment Facility
Designed by URS|CH2M Oak Ridge LLC (UCOR) for the Department of Energy
Oak Ridge Office of Environmental Management
under U. S. Government contract DE-SC-0004645

Y-12 National Security Complex managed and operated by Consolidated Nuclear Security, LLC for the Department of Energy under U.S. Government contract DE-NA0001942 « Oak Ridge, Tennessee »

DRW	I LAPINA-TRAUT	06/16/17
CHKR	A FIRTH	06/16/17
DE	H ELLIOTT	06/16/17
DVR		
DM	L ELLIS	06/16/17
PE	Teresa J. Pierce, P.E.	

RPE

PROJECT NAME:
OF200 MERCURY TREATMENT FACILITY

STRUCTURAL
TREATMENT FACILITY
STEEL CONNECTION DETAILS

USE	DISC	DT	DC	CM	SYSTEM	STAT	SIZE	BLDG	FL	CLASS
3	S	S	S	NC	FAC	AR	E	9410-02	S	U

SH.	OF	TYPE		PART	REV
1	1	DD	S941002-F-0041	000	0

662886

PART	REV	DESCRIPTION	DRW	CHKR	DE	DVR	DM	DATE
	0	ISSUED FOR CONSTRUCTION	ILT	AF	HE		LE	06/2017

REVISION OR ISSUE PURPOSE | REVISION APPROVALS | SQUAD CHECK: WE AR CV ST HV EM FP PD EE IE M NP | DRAWING APPROVALS: REV. DATE | DATE

ISSUED FOR CONSTRUCTION

THIS DRAWING IS LOANED FOR SOLE USE OF THE INTENDED RECIPIENT AND ONLY FOR THE LIMITED PURPOSES FOR WHICH IT WAS PROVIDED. USE BY OTHER ENTITIES OR FOR OTHER PURPOSES IS PROHIBITED AND AT THE USER'S OWN RISK. DRAWINGS ARE TO BE RETURNED UPON REQUEST OF THE FORWARDING RECIPIENT.