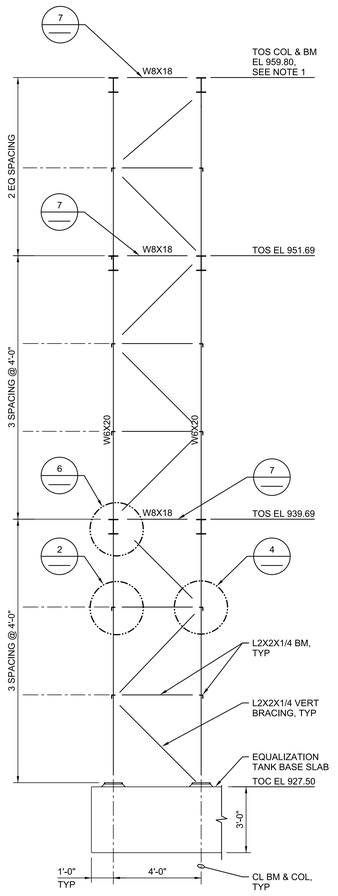

NOTES:
1. CONTRACTOR TO VERIFY TOP OF STEEL ELEVATION WITH MECHANICAL DRAWINGS.
2. NORTH ELEVATION IS SYMMETRICAL TO SOUTH ELEVATION.
3. FOR INFORMATION NOT SHOWN, SEE DRAWING S941002-F-0007.

PIPE SUPPORT TOWER SOUTH ELEVATION

A 3/8"=1'-0"

S941002-F-0007
S941002-F-0043

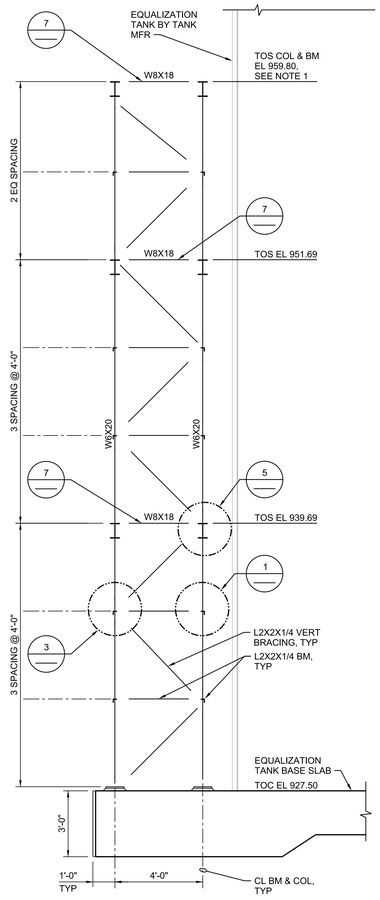

NOTES:
1. CONTRACTOR TO VERIFY TOP OF STEEL ELEVATION WITH MECHANICAL DRAWINGS.
2. WEST ELEVATION IS SYMMETRICAL TO EAST ELEVATION.
3. FOR INFORMATION NOT SHOWN, SEE DRAWING S941002-F-0007.

PIPE SUPPORT TOWER EAST ELEVATION

B 3/8"=1'-0"

S941002-F-0007
S941002-F-0043

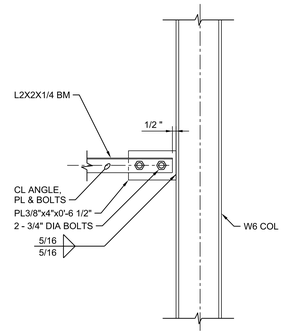

1 DETAIL
1 1/2"=1'-0"

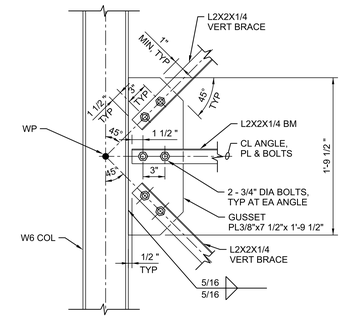

3 DETAIL
1 1/2"=1'-0"

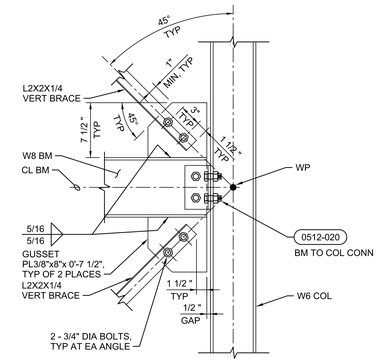

5 DETAIL
1 1/2"=1'-0"

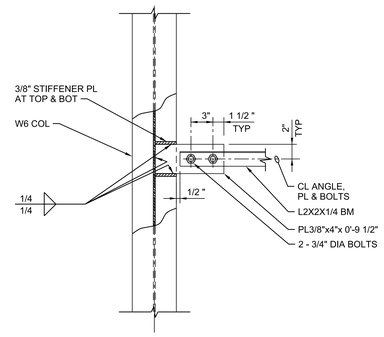

2 DETAIL
1 1/2"=1'-0"

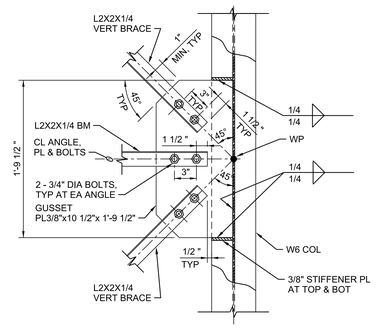

4 DETAIL
1 1/2"=1'-0"

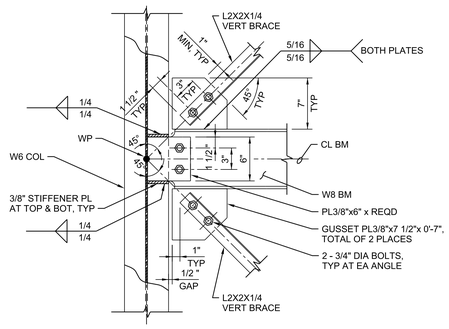

6 DETAIL
1 1/2"=1'-0"

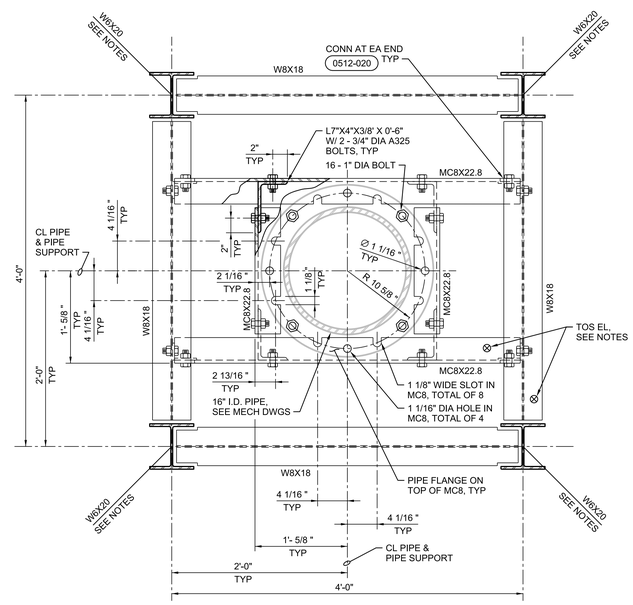

NOTES:
1. PIPE SUPPORT SHOULD BE PLACED AT EACH LOCATION OF HORIZONTAL BEAM W8X18. FOR TOP OF STEEL ELEVATION, SEE PIPE SUPPORT TOWER ELEVATIONS A AND B ON THIS SHEET.
2. CONTRACTOR TO VERIFY TOP OF STEEL ELEVATION AT TOP OF PIPE SUPPORT TOWER WITH MECHANICAL DRAWINGS.

N

7 TYPICAL PLAN AT W8X18 BEAM
1 1/2"=1'-0"

UCOR
URS | CH2M
Oak Ridge LLC

OF200 Mercury Treatment Facility
Designed by URS|CH2M Oak Ridge LLC (UCOR) for the Department of Energy
Oak Ridge Office of Environmental Management
under U. S. Government contract DE-SC-0004645

DRW	I LAPINA-TRAUT	06/16/17
CHKR	A FIRTH	06/16/17
DE	H ELLIOTT	06/16/17
DVR		
DM	L ELLIS	06/16/17
PE	Teresa J. Pierce, P.E.	

RPE

Y-12 National Security Complex managed and operated by Consolidated Nuclear Security, LLC for the Department of Energy under U.S. Government contract DE-NA0001942
« Oak Ridge, Tennessee »

PROJECT NAME:
OF200 MERCURY TREATMENT FACILITY

STRUCTURAL
TREATMENT FACILITY
PIPE SUPPORT TOWER

USE	DISC	DT	DC	CM	SYSTEM	STAT	SIZE	BLDG	FL	CLASS
3	S	P	B	NC	FAC	AR	E	9410-02	P	U

SH.	OF	TYPE		PART	REV
1	1	DD	S941002-F-0038	000	0

662886

PART	REV	DESCRIPTION	DRW	CHKR	DE	DVR	DM	DATE
	0	ISSUED FOR CONSTRUCTION	ILT	AF	HE		LE	06/2017

REVISION OR ISSUE PURPOSE

PE DATE — REVISION APPROVALS

WE AR CV ST HV EM FP PD EE IE M NP — SQUAD CHECK

REV. DATE — DRAWING APPROVALS — DATE

THIS DRAWING IS LOANED FOR SOLE USE OF THE INTENDED RECIPIENT AND ONLY FOR THE LIMITED PURPOSES FOR WHICH IT WAS PROVIDED. USE BY OTHER ENTITIES OR FOR OTHER PURPOSES IS PROHIBITED AND AT THE USER'S OWN RISK. DRAWINGS ARE TO BE RETURNED UPON REQUEST OF THE FORWARDING RECIPIENT.

ISSUED FOR CONSTRUCTION

6/22/2017 11:29:48 AM
S941002-F-0038.dgn