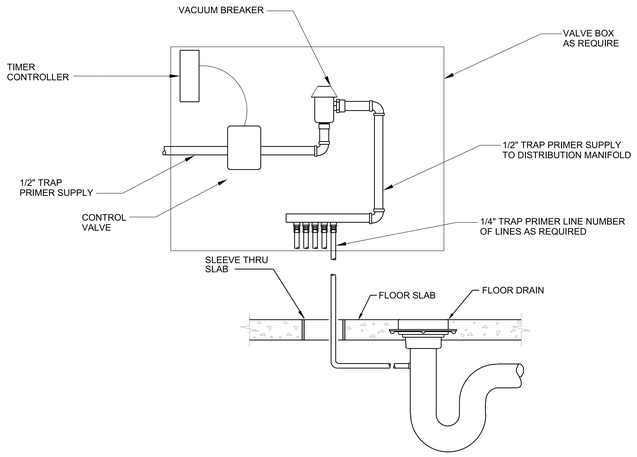

1 TRAP SEAL PRIMER DETAIL
NTS

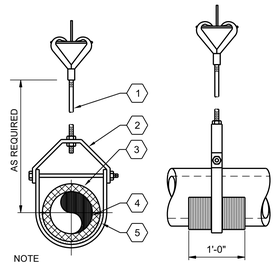

KEY NOTES:
1. ROD SIZED FOR LOAD AND SPACING.
2. CLEVIS PIPE HANGER.
3. PIPE INSULATION AS SPECIFIED.
4. PIPE SIZES 1/2"-10".
5. PROTECTIVE INSULATION SHIELD.

NOTE
A. PIPE HANGERS SHALL BE OVERSIZED AS REQUIRED TO ACCOMMODATE THICKNESS OF INSULATION SPECIFIED. HANGER SHALL NOT COME INTO CONTACT WITH THE INSULATION DIRECTLY, EITHER AT THE VERTICAL YOKE OR AT THE POINT OF SUPPORT. FOR REQUIREMENTS ON INSULATION SHIELD USED WITH PIPE HANGERS, SEE SPECIFICATIONS.

2 PIPE HANGER
NTS

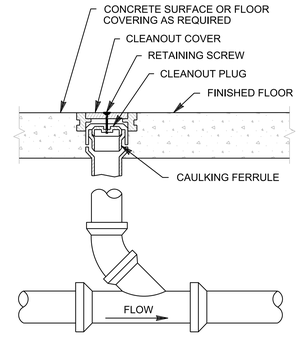

3 FLOOR CLEANOUT - FINISH FLOORS
NTS

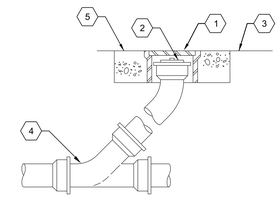

KEY NOTES:
1. CLEANOUT BOX WITH CI COVER MARKED "CO".
2. CLEANOUT FITTING
3. FINISH GRADE
4. BEND OR WYE, AS REQUIRED.
5. 18" x 18" x 6" CONCRETE PAD.

4 CLEANOUT TO GRADE DETAIL
NTS

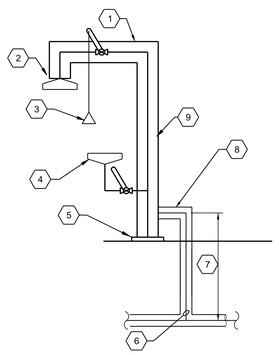

KEY NOTES:
1. EMERGENCY SHOWER.
2. SHOWER HEAD.
3. SHOWER PULL ROD.
4. EYEWASH.
5. ANCHOR TO CONCRETE.
6. 1-1/2" TEMPERED WATER SUPPLY.
7. KEEP AS SHORT AS POSSIBLE.
8. PROVIDE 2" OF INSULATION AND HEAT TRACING OVER EACH LINE. PROVIDE STAINLESS STEEL JACKET. FULLY INSULATE ALL UNDERGROUND PIPING. HEAT TRACING TO BE PROVIDED UNTIL LINE IS AT LEAST 36" BELOW GRADE.
9. INSULATION WITH HEAT TRACING.

5 EMERGENCY EYEWASH SHOWER (EXTERIOR)
NTS

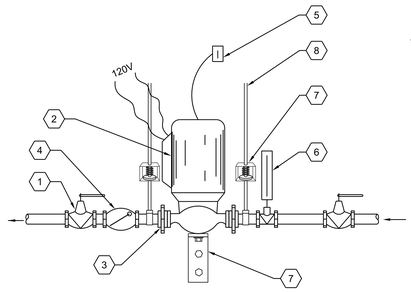

KEY NOTES:
1. ISOLATION BALL VALVE (TYP)
2. RECIRCULATION PUMP SEE SCHEDULE
3. DIELECTRIC UNION (TYP)
4. CHECK VALVE
5. WALL SWITCH, PUMP TO RUN CONTINUOUS
6. THERMOMETER
7. BASE-SUPPORT TO STRUCTURE OR SPRING HANGER
8. ANCHORAGE

6 RECIRCULATION PUMP DETAIL
NTS

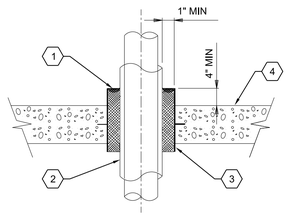

KEY NOTES:
1. SEAL WATER TIGHT ALL AROUND WITH WATERPROOF NON SHRINKING MASTIC
2. INSULATION (WHERE APPLICABLE)
3. PIPE SLEEVE
4. FLOOR

7 PIPE PENETRATION THRU FLOOR
NTS

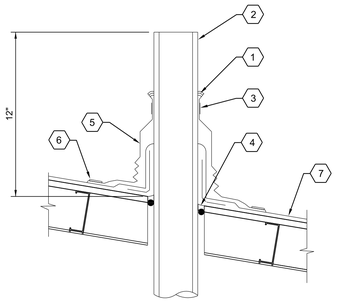

KEY NOTES:
1. SEALANT
2. VENT PIPE
3. STAINLESS STEEL DRAW BAND
4. 1/2" MIN SEALANT
5. PREFORMED BOOT ASSEMBLY PER SPECIFICATION SECTION 07 70 01
6. ATTACH AND FLASH PER MANUFACTURER'S REQUIREMENTS
7. ROOF ASSEMBLY

8 VENT THROUGH ROOF DETAIL
NTS

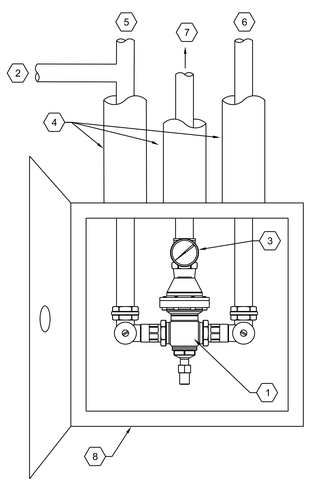

KEY NOTES:
1. THERMOSTAT MIXING VALVE. ACTUAL APPEARANCE WILL VARY BY MANUFACTURER.
2. RETURN WATER PIPING.
3. THERMOMETER.
4. INSULATION, SEE SPECIFICATIONS.
5. COLD WATER SUPPLY (REFER TO DRAWINGS FOR SIZING).
6. HOT WATER SUPPLY (160°F). REFER TO DRAWINGS FOR SIZING.
7. WATER SUPPLY TO FIXTURES OR EMERGENCY SHOWERS (REFER TO DRAWINGS FOR SIZING).
8. FACTORY METAL VALVE CABINET WITH DOOR.

9 TEMPERING VALVE WITH CABINET
NTS

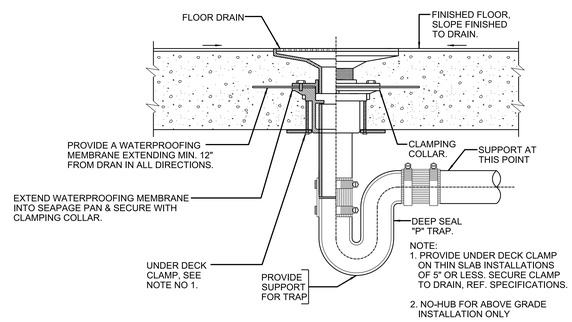

NOTE:
1. PROVIDE UNDER DECK CLAMP ON THIN SLAB INSTALLATIONS OF 5" OR LESS. SECURE CLAMP TO DRAIN, REF. SPECIFICATIONS.
2. NO-HUB FOR ABOVE GRADE INSTALLATION ONLY

10 FLOOR DRAIN INSTALATION DETAIL
NTS

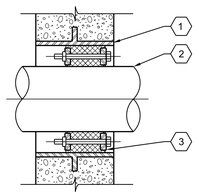

KEY NOTES:
1. PIPE SLEEVE
2. PASSING PIPE
3. MODULAR MECHANICAL SEAL ASSEMBLY WITH SST BOLTS AND NUTS, AS SPECIFIED

11 WALL PIPE PENETRATION SEAL
NTS

UCOR URS | CH2M Oak Ridge LLC

OF200 Mercury Treatment Facility
Designed by URS|CH2M Oak Ridge LLC (UCOR) for the Department of Energy
Oak Ridge Office of Environmental Management
under U. S. Government contract DE-SC-0004645

Y-12 National Security Complex managed and operated by Consolidated Nuclear Security, LLC for the Department of Energy under U.S. Government contract DE-NA0001942
« Oak Ridge, Tennessee »

PROJECT NAME: OF200 MERCURY TREATMENT FACILITY

PLUMBING
TREATMENT FACILITY
DETAILS

DRW	J PIGMAN	06/16/17
CHKR	J McMURREN	06/16/17
DE	T PRICE	06/16/17
DVR		
DM	L ELLIS	06/16/17
PE	Teresa J. Pierce, P.E.	

RPE: THEODORE J. PRICE, REGISTERED ENGINEER, COMMERCE, No. 107130, STATE OF TENNESSEE, 03 JUL 2017

USE	DISC	DT	DC	CM	SYSTEM	STAT	SIZE	BLDG	FL	CLASS
3	P	X	X	NC	FAC	AR	E	9410-02	X	U

SH.	OF	TYPE		PART	REV
1	1	DD	P941002-F-0005	000	0

662886

PART	REV	DESCRIPTION	DRW	CHKR	DE	DVR	DM	DATE
	0	ISSUED FOR CONSTRUCTION	JP	JM	TP		LE	06/2017

REVISION OR ISSUE PURPOSE — REVISION APPROVALS — SQUAD CHECK: WE AR CV ST HV EM FP PD EE IE M NP — DRAWING APPROVALS — DATE

THIS DRAWING IS LOANED FOR SOLE USE OF THE INTENDED RECIPIENT AND ONLY FOR THE LIMITED PURPOSES FOR WHICH IT WAS PROVIDED. USE BY OTHER ENTITIES OR FOR OTHER PURPOSES IS PROHIBITED AND AT THE USER'S OWN RISK. DRAWINGS ARE TO BE RETURNED UPON REQUEST OF THE FORWARDING RECIPIENT.

ISSUED FOR CONSTRUCTION