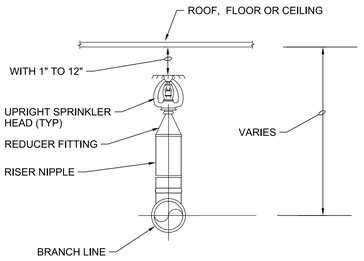

NOTE:

REFER TO NFPA FOR ADDITIONAL REQUIREMENTS FOR OBSTRUCTED CONSTRUCTION.

UPRIGHT PENDANT SPRINKLER HEAD (2113-100)

NTS

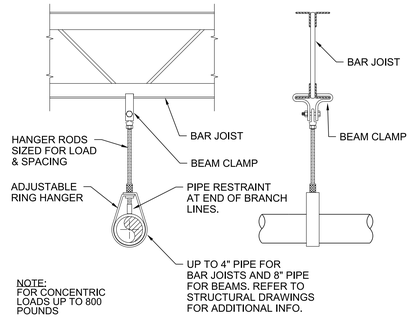

NOTE:
FOR CONCENTRIC LOADS UP TO 800 POUNDS

BAR JOIST OR BEAM HANGER (2113-101)

NTS

HYDRAULIC SYSTEM

THIS BUILDING IS PROTECTED BY A HYDRAULICALLY DESIGNED AUTOMATIC SPRINKLER SYSTEM

LOCATION

NO. OF SPRINKLERS

BASIS FOR DESIGN
1. DENSITY
2. DESIGNED AREA OF DISCHARGE

SYSTEM DEMAND
1. WATER FLOW RATE
2. RESIDUAL PRESSURE AT THE BASE OF THE RISER
3. STATIC PRESSURE
4. OCCUPANCY CLASSIFICATION
5. HOSE STREAM
6. CONTRACTORS NAME

SPRINKLER SYSTEM - GENERAL INFORMATION
FOR

High-piled storage ☐Yes ☐No
Rack storage: ☐Yes ☐No
Commodity class: _____
Max storage ht _____ft
Aisle width (min) _____ft
Encapsulation ☐Yes ☐No
Solid shelving: ☐Yes ☐No
Flammable/ combustible liquids ☐Yes ☐No
Other storage: ☐Yes ☐No
Hazardous materials: ☐Yes ☐No
Idle pallets: ☐Yes ☐No
Antifreeze systems ☐Yes ☐No
Location: _____
Dry or aux systems ☐Yes ☐No
Location: _____

Date: _____
Flow test Data:
Static: _____ psi
Resid: _____ psi
Flow: _____ gpm
Pitot: _____ psi
Date: _____
Location: _____
Location of aux/low point drains:
Original main drain test results:
Static: _____ psi
Residual: _____ psi

Name of contractor or designer:
Address:
Phone:

NOTES:

A. SECURE SYSTEM SIGN TO ALARM VALVE WITH CHAIN. THE IDENTIFICATION SIGN SHALL BE IN ACCORDANCE WITH NFPA 13.

B. GENERAL INFORMATION SIGN SHALL ALSO BE PROVIDED PER NFPA, 13 REQUIREMENTS AND SECURED TO THE FIRE RISER.

C. SIGNS SHALL BE RED WITH WHITE LETTERING.

D. SIGNS SHALL BE CONSTRUCTED OF CORROSION RESISTANT METAL.

E. MATERIAL USED TO ATTACH SIGNS TO RISERS SHALL BE CORROSION RESISTANT METAL.

SYSTEM IDENTIFICATION SIGNS (2113-250)

NTS

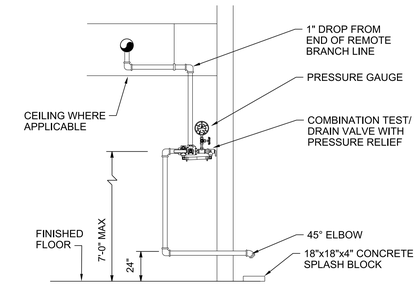

WET PIPE INSPECTOR'S TEST DRAIN CONN (2113-400)

NTS

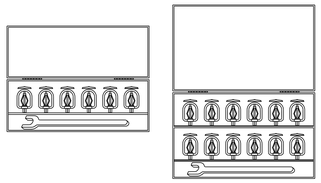

NOTES:

A. PROVIDE SPARE SPRINKLERS AND CABINETS IN ACCORDANCE WITH NFPA 13.

B. THE REQUIRED NUMBER STIPULATED IN NFPA APPLIES TO EACH TYPE (STYLE AND RATING) IF FEWER THAN SIX OF A PARTICULAR TYPE, PROVIDE TWO SPARE SPRINKLERS.

C. MOUNT ON WALL NEAR FIRE SPRINKLER RISER AT 5'-0" ABOVE FINISHED FLOOR.

D. A LIST OF THE SPRINKLERS INSTALLED IN THE PROPERTY SHALL BE POSTED IN THE SPRINKLER CABINET AND SHALL MEET NFPA 13.

SPARE SPRINKLER HEAD CABINET (2113-500)

NTS

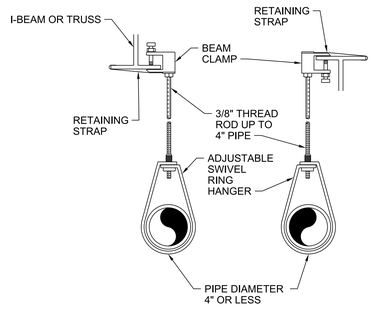

NOTE:
A. LOAD NOT TO EXCEED 400 POUNDS

PIPE HANGER WITH RING (2113-550)

NTS

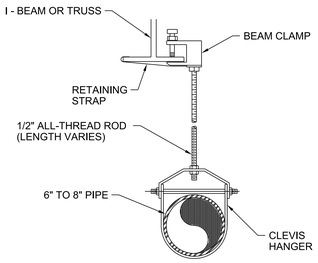

NOTE:
A. LOAD NOT TO EXCEED 400 POUNDS
B. MAXIMUM HANGAR SPACING FOR STEEL PIPE SIZES 2" AND UP IS 15'-0".

PIPE HANGER WITH CLEVIS (2113-551)

NTS

SEISMIC BRACING NOTES

A. SEISMIC BRACING SHALL BE PROVIDED PER NFPA 13.

B. LONGITUDINAL BRACES SHALL BE ALLOWED TO ACT AS LATERAL BRACES WHERE THEY ARE INSTALLED WITHIN 24" OF PIPING WHICH IS BRACED LATERALLY AND VICE VERSA PER NFPA 13.

C. LATERAL SWAY BRACING SHALL NOT BE REQUIRED ON PIPES INDIVIDUALLY SUPPORTED BY RODS LESS THAN 6" LONG PER NFPA 13.

D. EACH RUN OF PIPE BETWEEN A CHANGE IN DIRECTION SHALL BE PROVIDED WITH BOTH LATERAL AND LONGITUDINAL BRACING. EXCEPTION: PIPE RUNS LESS THAN 12 FEET PER NFPA 13.

E. DO NOT ATTACH BRACING TO METAL DECKING

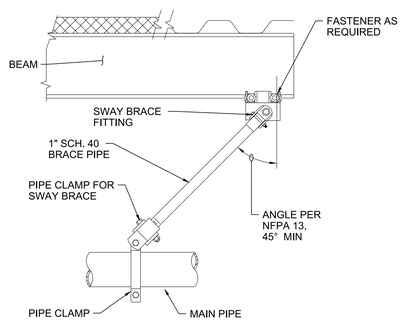

LONGITUDINAL BRACE
(SYMBOL ⟷)

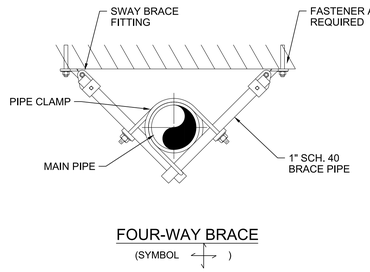

FOUR-WAY BRACE
(SYMBOL ⟷)

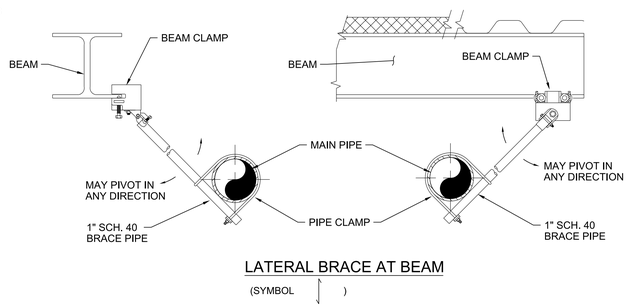

LATERAL BRACE AT BEAM
(SYMBOL ↕)

TYPICAL SEISMIC BRACING DETAILS (2113-554)

NTS

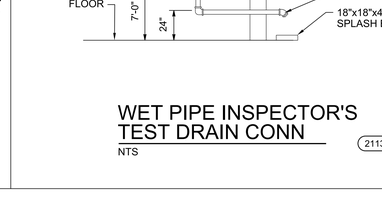

NOTE: SEE SPECIFICATION FOR NON-RATED WALLS

PIPE PENETRATION NON-RATED WALL (2113-563)

NTS

UCOR URS | CH2M Oak Ridge LLC

OF200 Mercury Treatment Facility
Designed by URS|CH2M Oak Ridge LLC (UCOR) for the Department of Energy
Oak Ridge Office of Environmental Management
under U. S. Government contract DE-SC-0004645

Y-12 National Security Complex managed and operated by Consolidated Nuclear Security, LLC for the Department of Energy under U.S. Government contract DE-NA0001942
« Oak Ridge, Tennessee »

PART	REV	DESCRIPTION	DRW	CHKR	DE	DVR	DM	DATE
	Ø	ISSUED FOR CONSTRUCTION	JP		TP		LE	06/2017

REVISION OR ISSUE PURPOSE

REVISION APPROVALS: PE, DATE

SQUAD CHECK: WE, AR, CV, ST, HV, EM, FP, PD, EE, IE, M, NP

RPE: THEODORE J. PRICE, STATE OF TENNESSEE, 2017

REV.	DATE	DRAWING APPROVALS		DATE
		DRW	J PIGMAN	06/16/17
		CHKR	J McMURREN	06/16/17
		DE	T PRICE	06/16/17
		DVR		
		DM	L ELLIS	06/16/17
		PE	Teresa J. Pierce, P.E.	

PROJECT NAME:
OF200 MERCURY TREATMENT FACILITY

PLUMBING
TREATMENT FACILITY
FIRE SYSTEM DETAILS

USE	DISC	DT	DC	CM	SYSTEM	STAT	SIZE	BLDG	FL	CLASS
3	P	F	X	NC	FAC	AR	E	9410-02	X	U

SH.	OF	TYPE		PART	REV
1	1	DD	P941002-F-0012	000	0

ISSUED FOR CONSTRUCTION

THIS DRAWING IS LOANED FOR SOLE USE OF THE INTENDED RECIPIENT AND ONLY FOR THE LIMITED PURPOSES FOR WHICH IT WAS PROVIDED. USE BY OTHER ENTITIES OR FOR OTHER PURPOSES IS PROHIBITED AND AT THE USER'S OWN RISK. DRAWINGS ARE TO BE RETURNED UPON REQUEST OF THE FORWARDING RECIPIENT.

6/29/2017 6:59:02 PM
P941002-F-0012.dgn

662886