OUTSIDE AIR REQUIREMENTS (BASED ON 2012 INTERNATIONAL MECHANICAL CODE AND ASHRAE 62)

UNIT SERVING ZONE	ZONE NAME	PEOPLE OUTDOOR AIRFLOW Rp(CFM/person)	AREAL OUTDOOR AIRFLOW Ra(CFM/SQF)	OCCUPANT DENSITY #/1000SQF	OCCUPANT LOAD Pz(PERSON)	OCCUPIED AREA Az(SQF)	EFFECTIVENESS Ez	OSA(CFM) TOTAL REQUIRED	OSA(CFM) ACTUAL	AIR CHANGE RATE (ACH)	NOTES
AHU-4 / SF-2	OPERATING GALLERY	0	0.06	0	0	5,780	1	347	6,000/11,000	5.2/9.4	1
EF-2A / EF-2B	CIRCULATION / PLATFORM / CLEARWELL	0	0.06	0	0	10,000	1	600	10,000/20,000	1.5/3	1
SF-1	COMPRESSOR / HVAC ROOM	0	0.06	0	0	4,500	1	270	10,200	7	1
AHU-2A / AHU-2B	ELECTRICAL ROOM	0	0.06	0	0	1,440	1	86	6,000	13	1
AHU-1 / EF-1	FILTER PRESS ROOM	0	0.06	0	0	2,903	1	174	7,000	7	1
AHU-3 / EF-3	CHEMICAL DISTRIBUTION ROOM	0	0.06	0	0	4,300	1	258	4,300	3	1
EF-5	FIRE RISER ROOM	0	0.06	0	0	95	1	6	175	1	1
AHU-5	SAMPLE PREP ROOM	5	0.06	5	1	242	1	21	325	8	
AHU-6	CONTROL ROOM	5	0.06	5	1	235	1	20	50	1	
EF-8	STORAGE SOILED GEAR	5	0.06	2	0	50	1	4	100	12	
EF-4	RESTROOM	--	--	--	--	75	--	50/75	75	6	2
EF-6	HVAC ROOM	0	0.06	0	0	113	1	7	260	12	1

NOTES:
1. SPACES ARE CONSIDERED NORMALLY UNOCCUPIED. VENTILATION FOR OCCUPANTS IS NOT CODE REQUIRED.
2. AIR FLOW BASED ON INTERMITTENTLY OPERATED EXHAUST FAN.

AIR FLOW TABLE
NTS

GENERAL NOTES

1. REFER TO SHEET H941002-F-0016 FOR SEQUENCE OF OPERATION.

SHEET KEYNOTES

1. MAN COOLERS STARTED AND STOPPED MANUALLY BY INDIVIDUAL WALL SWITCHES. SWITCHES PROVIDED UNDER ELECTRICAL, MECHANICAL CONTRACTOR SHALL COORDINATE INSTALLATION WITH OTHER TRADES.
2. FAN AND DAMPER CONTROLLED BY LINE VOLTAGE THERMOSTAT. SEE DIAGRAM THIS SHEET.
3. FAN AND DAMPERS CONTROLLED BY A TEMPERATURE CONTROLLER. SEE DETAIL 6 ON SHEET H94001-F-0013.

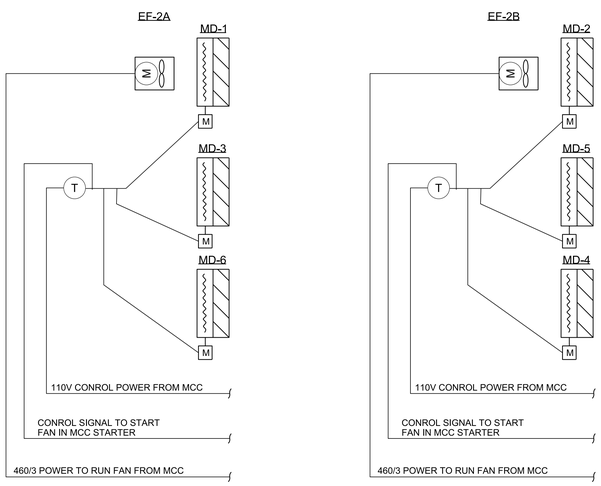

EF-2A AND EF-2B WIRING DIAGRAM
NTS

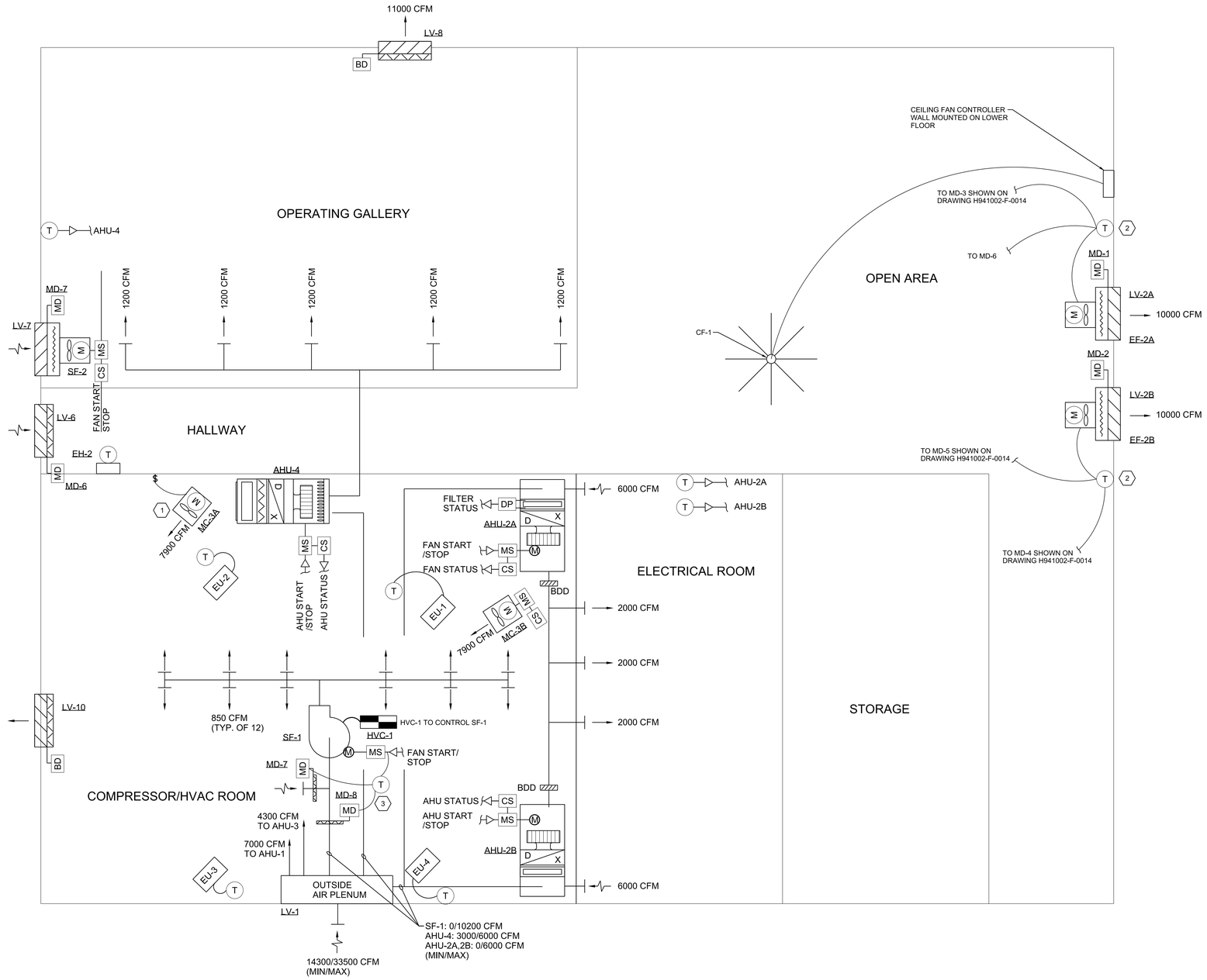

1 UPPER LEVEL AIR FLOW DIAGRAM
NTS

UCOR
URS | CH2M Oak Ridge LLC

OF200 Mercury Treatment Facility
Designed by URS|CH2M Oak Ridge LLC (UCOR) for the Department of Energy
Oak Ridge Office of Environmental Management
under U. S. Government contract DE-SC-0004645

Y-12 National Security Complex managed and operated by Consolidated Nuclear Security, LLC for the Department of Energy under U.S. Government contract DE-NA0001942 • Oak Ridge, Tennessee •

DRW	J PIGMAN	06/16/17
CHKR	J McMURREN	06/16/17
DE	M FULLS	06/16/17
DVR		
DM	L ELLIS	06/16/17
PE	Teresa J. Pierce, P.E.	

RPE: THEODORE J. PRICE, STATE OF TENNESSEE, 03DUAL 2087

PROJECT NAME: OF200 MERCURY TREATMENT FACILITY

HVAC TREATMENT FACILITY UPPER LEVEL AIR FLOW DIAGRAM

USE	DISC	DT	DC	CM	SYSTEM	STAT	SIZE	BLDG	FL	CLASS
3	H	A	S	NC	FAC	AR	E	9410-02	X	U

SH.	OF	TYPE		PART	REV
1	1	DD	H941002-F-0015	000	0

662886

PART	REV	DESCRIPTION	DRW	CHKR	DE	DVR	DM	DATE	PE	DATE
	0	ISSUED FOR CONSTRUCTION	JP	JM	FM		LE	06/2017		

REVISION OR ISSUE PURPOSE — REVISION APPROVALS — SQUAD CHECK: WE AR CV ST HV EM FP PD EE IE M NP — DRAWING APPROVALS — DATE

ISSUED FOR CONSTRUCTION

THIS DRAWING IS LOANED FOR SOLE USE OF THE INTENDED RECIPIENT AND ONLY FOR THE LIMITED PURPOSES FOR WHICH IT WAS PROVIDED. USE BY OTHER ENTITIES OR FOR OTHER PURPOSES IS PROHIBITED AND AT THE USER'S OWN RISK. DRAWINGS ARE TO BE RETURNED UPON REQUEST OF THE FORWARDING RECIPIENT.

6/29/2017 8:50:46 PM
H941002-F-0015.dgn