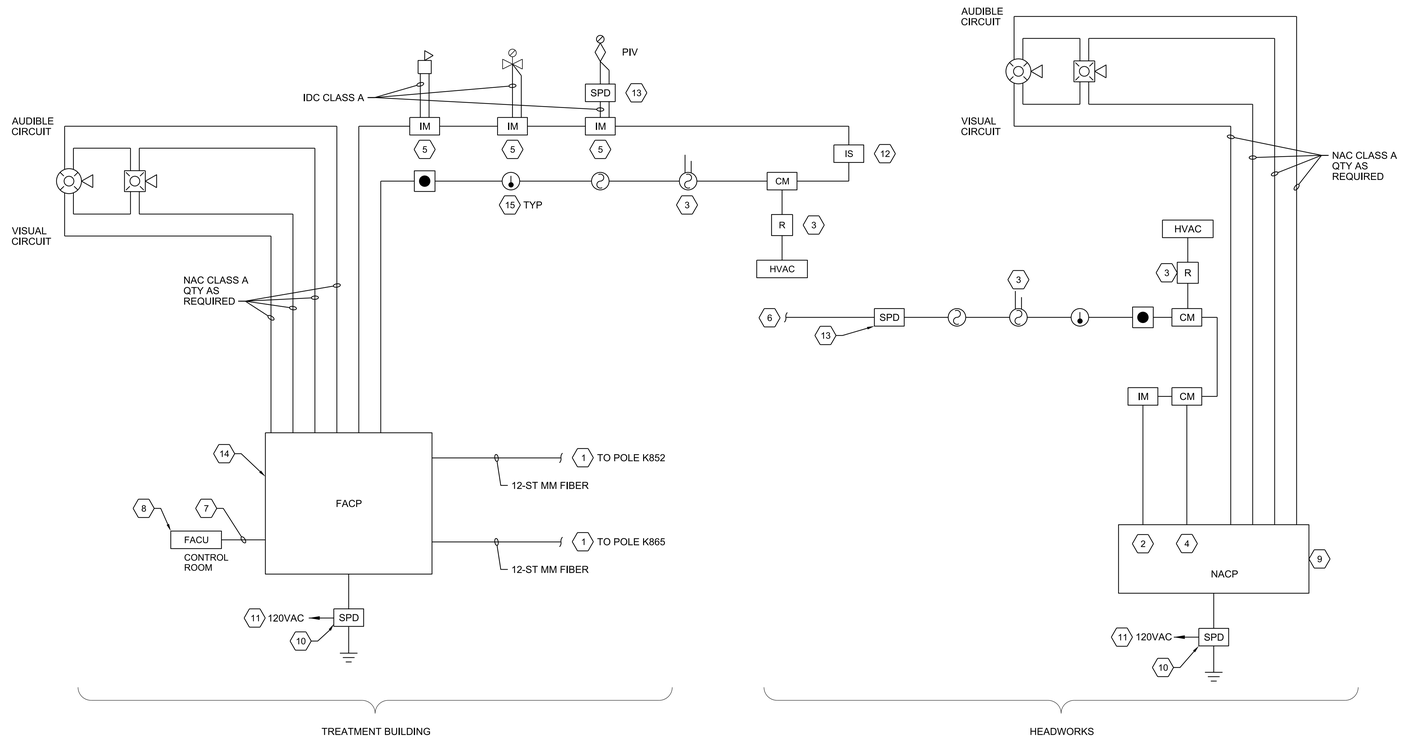

1 FIRE ALARM SYSTEM RISER DIAGRAM
NTS

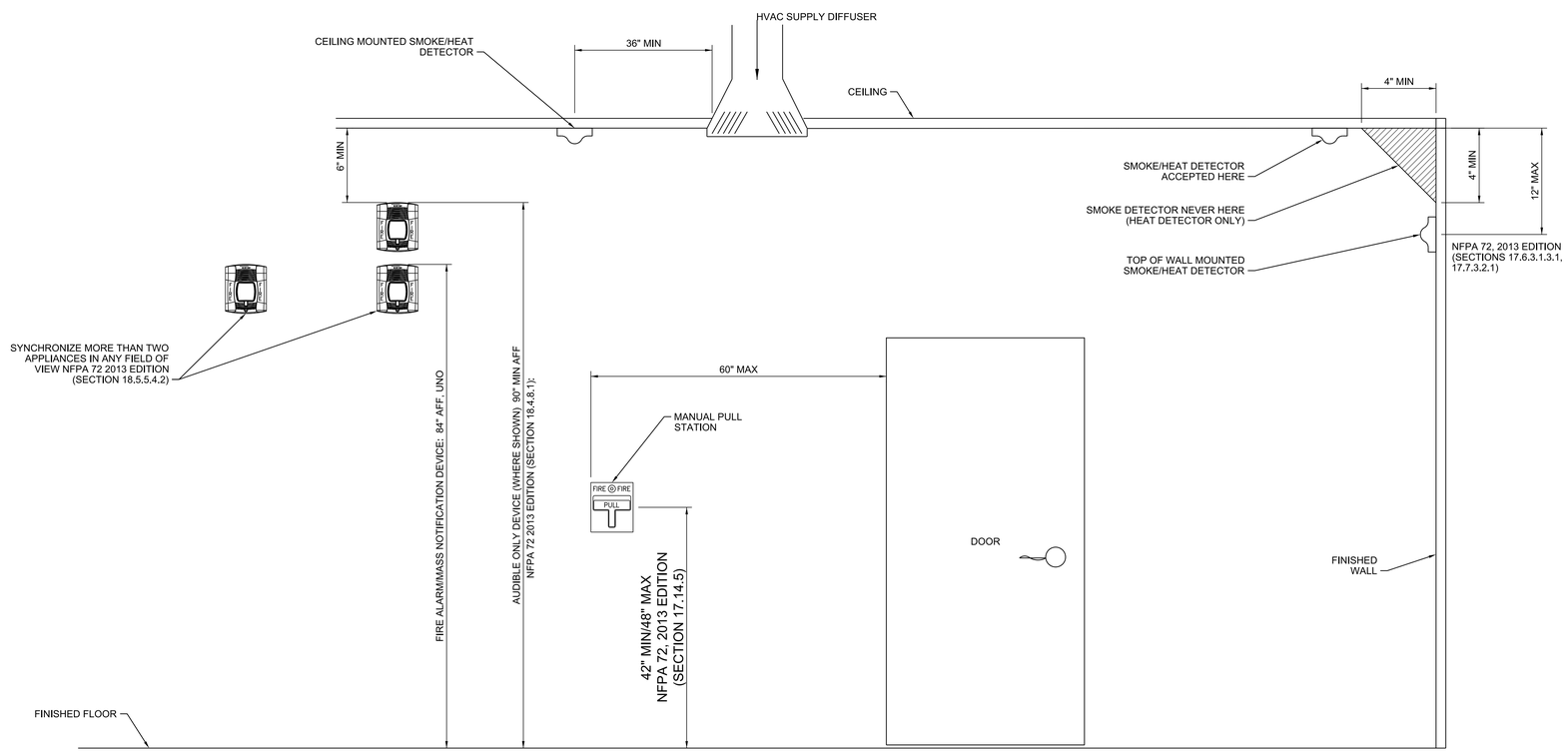

GENERAL NOTES
A.MEASUREMENTS SHOWN ARE TO THE CLOSEST EDGE OF THE DETECTOR.
B.SEE OTHER DETAILS FOR ADDITIONAL MOUNTING REQUIREMENTS FOR SPECIFIC DEVICES.

2 GENERAL FIRE ALARM AND MASS NOTIFICATION DEVICE MOUNTING
NTS

GENERAL NOTES

A. COORDINATE LOCATION OF DEVICES WITH OTHER CEILING MOUNTED DEVICES (HVAC, LIGHTS, ETC.) BUT MAINTAIN ADEQUATE SPACING TO MEET NFPA AUDIBILITY OR COVERAGE REQUIREMENTS.

B. UNLESS OTHERWISE NOTED, QUANTITY AND SIZING OF CONDUIT AND CONDUCTORS ARE THE RESPONSIBILITY OF THE FIRE ALARM CONTRACTOR. FIRE ALARM CONTRACTOR IS RESPONSIBLE TO PROVIDE A COMPLETE AND OPERATIONAL SYSTEM.

C. FOR FIRE ALARM LEGEND, SEE DWG E941001-F-0003.

D. QUANTITY OF DEVICES SHOWN ON RISER DIAGRAM ARE REPRESENTATIONAL. FOR ACTUAL QUANTITIES, SEE PLAN DRAWINGS.

E. CONTRACTOR IS RESPONSIBLE TO ADJUST ALL STROBE CANDELA SETTINGS TO MEET COVERAGE REQUIREMENT OF NFPA 72.

SHEET KEYNOTES

1. NETWORK INTERFACE TO Y-12 CAMPUS FIRE ALARM NETWORK. CLASS A ROUTING, USING 12-ST, 6-ST/TUBE, LOOSE-TUBE, OUTDOOR RATED CABLE; MOHAWK #M9B5IIT OR APPROVED EQUAL.
2. TROUBLE MONITORING CONTACTS.
3. DIVISION 28 CONTRACTOR TO PROVIDE AND WIRE ALL DUCT DETECTORS AND ASSOCIATED ADDRESSABLE CONTROL RELAYS TO SHUT DOWN ALL AIR HANDLERS, FAN COIL UNITS, EXHAUST FANS, AND ASSOCIATED FANS, DAMPERS, ETC. AS DETERMINED BY NFPA 90A. INTERPOSING RELAYS THAT INTERRUPT POWER CIRCUITS TO BE PROVIDED AND WIRED BY DIV26.
4. ACTUATION INPUT.
5. ADDRESSABLE INPUT MODULE(S) FOR FIRE SPRINKLER RISER SUPERVISION.
6. ADDRESSABLE SIGNALING LINE CIRCUIT (SLC) CLASS B CONNECTION TO Y-12 CAMPUS FIRE ALARM NETWORK NODE. ROUTE VIA OVERHEAD POLE TO LOCATION AS INDICATED ON DWG AND AS COORDINATED WITH Y-12 FIRE PROTECTION. SLC SHALL BE CONNECTED TO EXISTING GE-EST-3 FACP. CONNECTION TO NODE AND PROGRAMMING BY Y-12. CONTRACTOR SHALL SET ALL DEVICE ADDRESSES AS DESIGNATED BY Y-12. AERIAL CABLE; BELDEN #5240F1, OR APPROVED EQUAL.
7. RS-485 ANNUNCIATOR CIRCUIT.
8. FACU/REMOTE ANNUNCIATOR AS LOCATED PER Y-12 FIRE DEPARTMENT.
9. NACP TO PROVIDE LOCAL NOTIFICATION FUNCTIONS. SHALL BE CONTROLLED AND SUPERVISED VIA ADDRESSABLE MODULES ON THE SLC.
10. SURGE PROTECTIVE DEVICE, AS SPECIFIED. BOND TO BUILDING GROUND ELECTRODE SYSTEM WITH #6 AWG COPPER GROUND WIRE.
11. SERVE FROM DEDICATED 20A BRANCH CIRCUIT BREAKER. BREAKER SHALL BE RED AND LOCKABLE "ON".
12. INSTALL ISOLATION MODULE EVERY 20 ADDRESSABLE DEVICES AND AT TRANSITIONS BETWEEN FLOORS.
13. PROVIDE AND INSTALL SURGE PROTECTIVE DEVICE MODULE ON ALL CIRCUITS LEAVING/ENTERING EACH STRUCTURE; MODEL DITEK-DTK-2MHLP-TVSS, OR APPROVED EQUAL.
14. FACP; GE-EST-3, NO ALTERNATES.
15. ALL ADDRESSABLE DEVICES SHALL BE COMPATIBLE AND LISTED FOR GE-EST-3 PLATFORM, NO ALTERNATES. TYPICAL FOR ALL ADDRESSABLE DEVICES SHOWN DIRECTLY CONNECTED ON SLC.

UCOR URS | CH2M Oak Ridge LLC

OF200 Mercury Treatment Facility
Designed by URS|CH2M Oak Ridge LLC (UCOR) for the Department of Energy
Oak Ridge Office of Environmental Management
under U. S. Government contract DE-SC-0004645

Y-12 National Security Complex managed and operated by Consolidated Nuclear Security, LLC for the Department of Energy under U.S. Government contract DE-NA0001942 « Oak Ridge, Tennessee »

DRW	K BARTLETT	06/16/17
CHKR	B WILKINSON	06/16/17
DE	C CURTIS	06/16/17
DVR		
DM	L ELLIS	06/16/17
PE	Teresa J. Pierce, P.E.	

RPE: JAMES KEITH LANDRUM, REGISTERED ENGINEER, AGRICULTURE, No. 119033, STATE OF TENNESSEE

PROJECT NAME: OF200 MERCURY TREATMENT FACILITY

ELECTRICAL
TREATMENT FACILITY
FIRE ALARM RISER

USE	DISC	DT	DC	CM	SYSTEM	STAT	SIZE	BLDG	FL	CLASS
3	E	F	G	NC	FAC	AR	E	9410-01	X	U

SH.	OF	TYPE		PART	REV
1	1	DD	E941001-F-0007	000	0

PART	REV	DESCRIPTION	DRW	CHKR	DE	DVR	DM	DATE	PE	DATE
	0	ISSUED FOR CONSTRUCTION	KB	BW	CC		LE	06/2017		

REVISION OR ISSUE PURPOSE — REVISION APPROVALS — SQUAD CHECK: WE AR CV ST HV EM FP PD EE IE M NP — DRAWING APPROVALS — DATE

ISSUED FOR CONSTRUCTION

THIS DRAWING IS LOANED FOR SOLE USE OF THE INTENDED RECIPIENT AND ONLY FOR THE LIMITED PURPOSES FOR WHICH IT WAS PROVIDED. USE BY OTHER ENTITIES OR FOR OTHER PURPOSES IS PROHIBITED AND AT THE USER'S OWN RISK. DRAWINGS ARE TO BE RETURNED UPON REQUEST OF THE FORWARDING RECIPIENT.

6/22/2017 10:35:45 AM
E941001-F-0007.dgn

662886