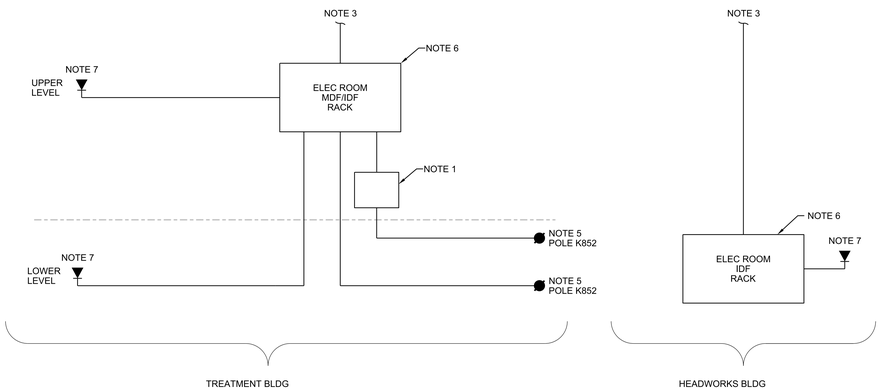

NOTE:
1. BUILDING PROTECTOR ASSEMBLY.
2. TYPICAL. QUANTITY AS INDICATED ON PLANS.
3. FIBER OPTIC PATCH CABLE TO LOCAL SCADA CABINET FOPP/S IN EACH RESPECTIVE BUILDING. UTILIZE SCADA FIBER OPTIC CABLE INSTALLED ALONG PIPE SUPPORT STRUCTURE BETWEEN HEADWORKS AND TREATMENT BUILDINGS TO INTERCONNECT THE TWO IDF RACKS. SEE DWG I941001-F-0002.
4. OUTSIDE PLANT FIBER OPTIC CABLE. (1) 24-ST SM FIBER IN 4" CONDUIT WITH (3)3", 3 - CELL GEOTEXTILE FABRIC MESH INNERDUCT.
5. OUTSIDE PLANT COPPER CABLE. (1) 12-PAIR CATEGORY-3 IN 4" CONDUIT WITH (3)3", 3 - CELL GEOTEXTILE FABRIC MESH INNERDUCT.
6. PROVIDE THE FOLLOWING FOR EACH MDF/IDF RACK;
   A. WALL-MOUNTED DATA TELECOMMUNICATIONS RACK PER SPECIFICATION.
   B. FIBER OPTIC RACK-MOUNT HOUSING, 2U, WITH CLOSET CONNECTOR HOUSING PANELS, QUANTITY AS NECESSARY, TO TERMINATE ALL FIBER STRANDS INSTALLED, BUT NO LESS THAN (12) TYPE LC PATCH PORT CONNECTORS MINIMUM.
   C. (1) CATEGORY 6, 48 PORT PATCH PANEL, HORIZONTAL, 2U
   D. (1) 110 STYLE CROSS CONNECT CATEGORY 5E WIRING BLOCK, RACKMOUNT, 100 PAIR WITH C-5 CLIPS, 2U
   E. (4) HORIZONTAL WIRE MANAGER, 2U; INSTALLED TOP OF RACK AND ALTERNATED IN BETWEEN OTHER RACK COMPONENTS.
7. DATA/TELECOMMUNICATION CABLE DROPS; QUANTITIES AS SHOWN ON PLANS, TYPICAL.

1 COMMUNICATIONS RISER DIAGRAM
NTS

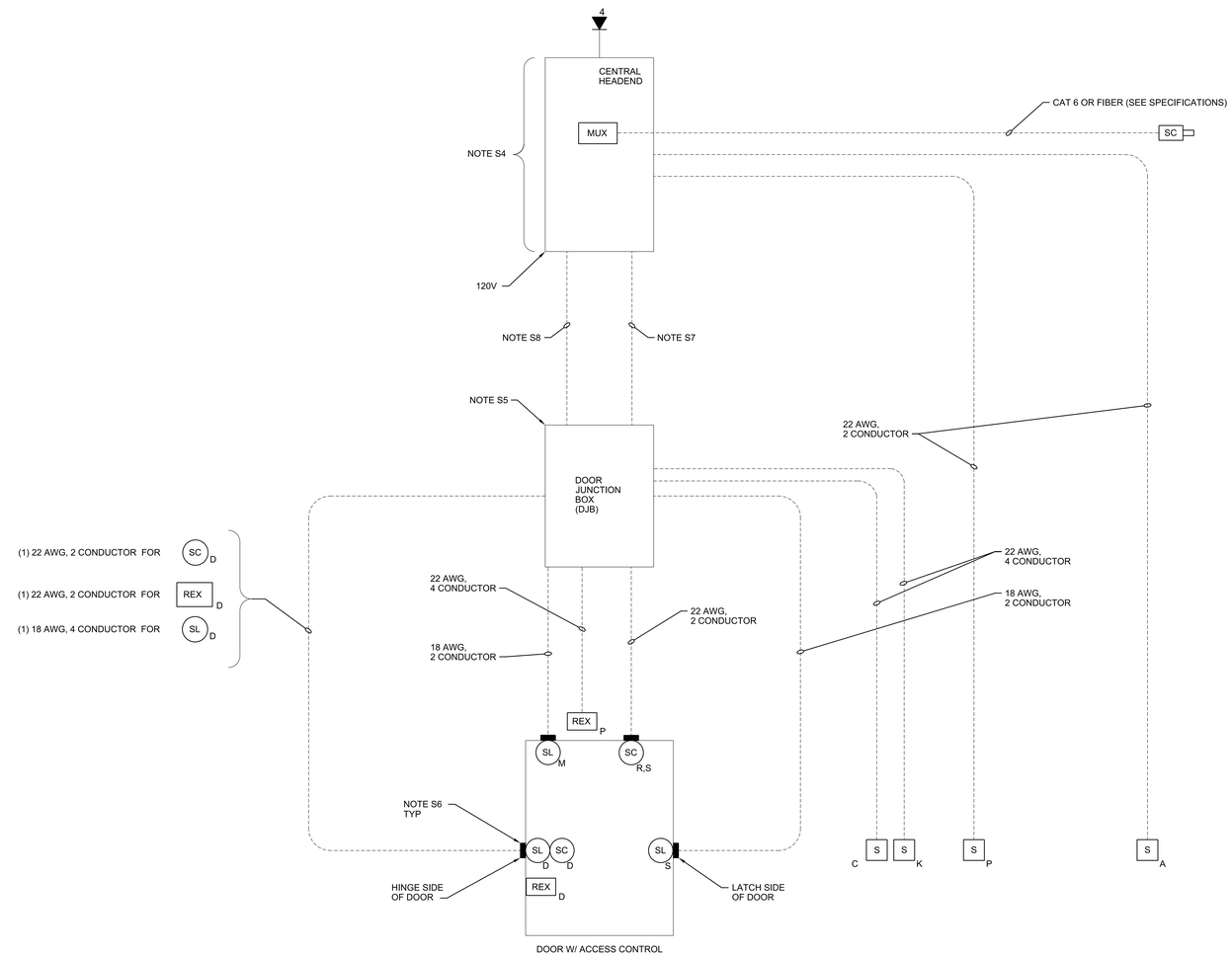

SECURITY SYSTEM BLOCK DIAGRAM NOTES:

S1. GENERAL NOTE: MANUFACTURER'S STANDARD CONDUCTOR TYPES SHALL BE USED FOR WIRING, #22 AWG IS MINIMUM SIZE. (COMMUNICATIONS WIRING MAY BE #22 AWG). CONDUCTOR TYPES SHOWN ARE BASED ON FIRST-NAMED MANUFACTURER OF SPECIFICATIONS. VERIFY ALL WIRING TYPES WITH SECURITY SYSTEM SUBCONTRACTOR PRIOR TO PURCHASE.

S2. GENERAL NOTE: ROUTE ALL CONDUCTORS FOR THIS SYSTEM IN CONDUIT, 3/4"C MINIMUM, FROM EACH DEVICE TO THE IDENTIFIED HEAD-END LOCATION.

S3. GENERAL NOTE: THIS IS A TYPICAL WIRING DETAIL; NOT ALL DEVICES SHOWN MAY BE REQUIRED FOR THIS PROJECT.

S4. FOR REQUIRED HEAD-END EQUIPMENT, SEE SPECIFICATION SECTION 28 13 70 ACCESS CONTROL, INTRUSION DETECTION AND SURVEILLANCE SYSTEM.

S5. ALL CABLING FOR EACH DOOR LOCATION SHALL BE ROUTED THROUGH DOOR JUNCTION BOX LOCATED ABOVE DOOR. ALL SPLICES SHALL BE TERMINATED ON TERMINAL BLOCKS; NO WIRE-NUTS ALLOWED.

S6. PROVIDE BLOCK-OUT IN DOOR CONDUIT FRAME. ROUTE CONDUIT CONCEALED IN WALL TO BLOCK-OUT LOCATIONS.

S7. CABLING BETWEEN HEAD-END AND DOOR JUNCTION BOX PER MANUFACTURER REQUIREMENTS. CONFIRM REQUIREMENTS WITH ACIDS SUBCONTRACTOR.

S8. FOR ACIDS LINK BETWEEN TREATMENT BUILDING CENTRAL HEADEND AND HEADWORK BUILDING DOOR JUNCTION BOX, UTILIZE A FIBER OPTIC PATCH LINK TO THE RESPECTIVE SCADA FIBER OPTIC FOPP/S, AND ACROSS THE CABLE INSTALLED ALONG THE PIPE STRUCTURE BETWEEN BUILDINGS. SEE DWG I941001-F-0002

2 ACCESS CONTROL & INTRUSION DETECTIONSYSTEM BLOCK / WIRING DIAGRAM
NTS

THIS DRAWING IS LOANED FOR SOLE USE OF THE INTENDED RECIPIENT AND ONLY FOR THE LIMITED PURPOSES FOR WHICH IT WAS PROVIDED. USE BY OTHER ENTITIES OR FOR OTHER PURPOSES IS PROHIBITED AND AT THE USER'S OWN RISK. DRAWINGS ARE TO BE RETURNED UPON REQUEST OF THE FORWARDING RECIPIENT.

PART	REV	DESCRIPTION (REVISION OR ISSUE PURPOSE)	DRW	CHKR	DE	DVR	DM	DATE	PE	DATE	WE	AR	CV	ST	HV	EM	FP	PD	EE	IE	M	NP
	Ø	ISSUED FOR CONSTRUCTION	KB	BW	CC		LE	06/2017														

REVISION APPROVALS — SQUAD CHECK

RPE: JAMES KEITH LANDMAN, REGISTERED ENGINEER, AGRICULTURE, No. 119311, STATE OF TENNESSEE

REV.	DATE	DRAWING APPROVALS		DATE
		DRW	K BARTLETT	06/16/17
		CHKR	B WILKINSON	06/16/17
		DE	C CURTIS	06/16/17
		DVR		
		DM	L ELLIS	06/16/17
		PE	Teresa J. Pierce, P.E.	

UCOR URS | CH2M Oak Ridge LLC

OF200 Mercury Treatment Facility
Designed by URS|CH2M Oak Ridge LLC (UCOR) for the Department of Energy
Oak Ridge Office of Environmental Management
under U. S. Government contract DE-SC-0004645

Y-12 National Security Complex managed and operated by Consolidated Nuclear Security, LLC for the Department of Energy under U.S. Government contract DE-NA0001942
« Oak Ridge, Tennessee »

PROJECT NAME: OF200 MERCURY TREATMENT FACILITY

ELECTRICAL
TREATMENT FACILITY
COMMUNICATIONS DETAILS

USE	DISC	DT	DC	CM	SYSTEM	STAT	SIZE	BLDG	FL	CLASS
3	E	B	K	NC	FAC	AR	E	9410-01	X	U

SH.	OF	TYPE		PART	REV
1	1	DD	E941001-F-0006	000	0

662886

ISSUED FOR CONSTRUCTION

6/22/2017 10:35:17 AM
E941001-F-0006.dgn