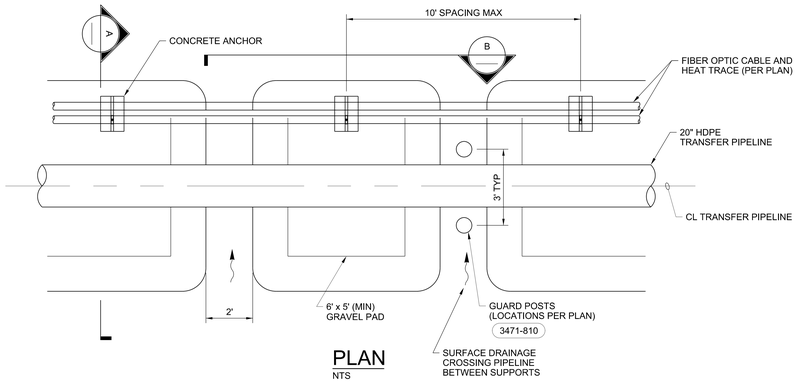

PLAN
NTS

1 TRANSFER PIPELINE SUPPORT
NTS

C941001-F-0019
THRU
C941001-F-0027

TRANSFER PIPELINE SUPPORT NOTES:

1. CLEAR AND GRUB UNDERNEATH GRAVEL PAD AND CONCRETE ANCHOR, BACKFILL WITH GRANULAR MATERIAL. EXISTING AC PAVEMENT SHALL BE GRINDED 2" AND BACKFILLED.
2. EXPANSION AND CONTRACTION MOVEMENT ALLOWANCE IS APPROXIMATELY 3'-0".

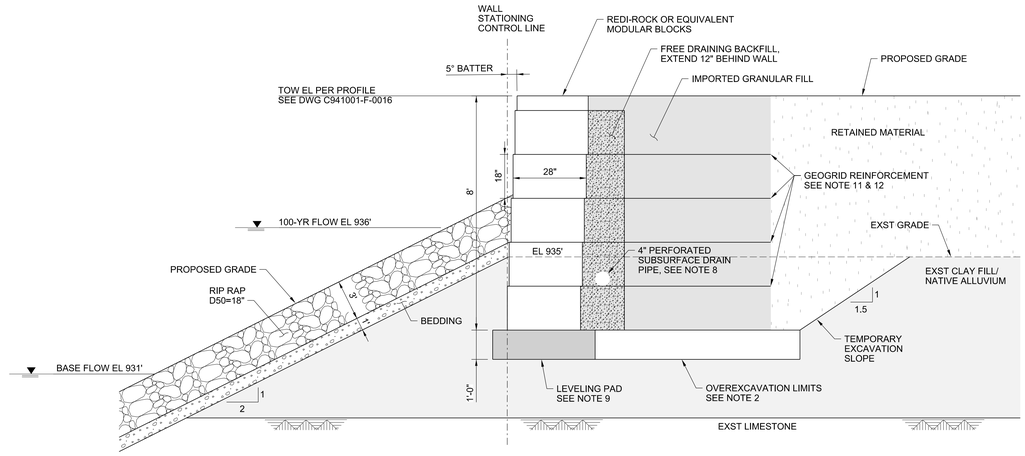

C MSE WALL SECTION
NTS

C941001-F-0014
C941001-F-0016

MSE WALL NOTES:

1. CONTRACTOR TO DESIGN WALL AND PROVIDE PLAN, DETAILS, AND SECTIONS OF FINAL WALL DETAILING STATIONS, ANGLE POINTS, AND ELEVATIONS.
2. OVEREXCAVATE A MINIMUM OF 1 FOOT OF MATERIAL BENEATH THE WALL FOOTPRINT AND REPLACE WITH IMPORTED GRANULAR FILL.
3. DESIGN SHALL CONFORM TO THE REQUIREMENTS OF IBC 2015 AND 2009 FHWA GEC-011 "DESIGN AND CONSTRUCTION OF MECHANICALLY STABILIZED EARTH WALLS AND REINFORCED SLOPES".
4. DESIGN SITE-ADJUSTED PEAK GROUND ACCELERATION EQUAL TO 0.15 g AND 1.0-SECOND SPECTRAL ACCELERATION EQUAL TO 0.187 g.
5. PROVIDE A MINIMUM SERVICE LIFE OF 50 YEARS FOR ALL COMPONENTS.
6. RETAINING WALL TO BE DESIGNED USING THE FOLLOWING SOIL PROPERTY VALUES:

Material Type	Total Unit Weight (pcf)	Effective Friction Angle (deg)	Cohesion (psf)
Existing Clay Fill/Native Alluvium	126	26	50
Retained Material	126	26	0
Imported Granular Fill (foundation material and reinforced zone)	120	32	0

7. DESIGN CRITERIA FOR WALL DESIGN:

Loading Scenario	Requirement
Overturning	FS ≥ 1.5 (static), FS ≥ 1.1 (seismic)
Sliding	FS ≥ 1.5 (static), FS ≥ 1.1 (seismic)
Global stability	FS ≥ 1.5 (static), FS ≥ 1.1 (seismic)
Settlement	Max. allowable settlement of 1-inch
Bearing Capacity	Allowable bearing capacity of 3 ksf

8. PERFORATED SUBSURFACE DRAIN PIPE TO DAYLIGHT AT LOW POINT OF WALL OR AS NOTED ON CIVIL LAYOUT SHEETS.
9. LEVELING PAD TO CONSIST OF 12-INCHES OF CRUSHED BASE COURSE.
10. WALL IS TO BE DESIGNED BY CONTRACTOR, LICENSED AS A PROFESSIONAL ENGINEER IN THE STATE OF TENNESSEE.
11. LENGTH OF GEOGRID REINFORCEMENT TO BE A MINIMUM OF 0.7 OF HEIGHT OF WALL H.
12. COORDINATE SECURITY FENCE POST INSTALLATION WITH RETAINING WALL CONSTRUCTION. GEOGRID REINFORCEMENT STRAPS MAY BE ANGLED PER MANUFACTURERS LIMITS TO AVOID FENCE POST FOUNDATIONS.
13. WORK WITH SPECIFICATION SECTION 32 32 16 PRECAST MODULAR BLOCK RETAINING WALL.

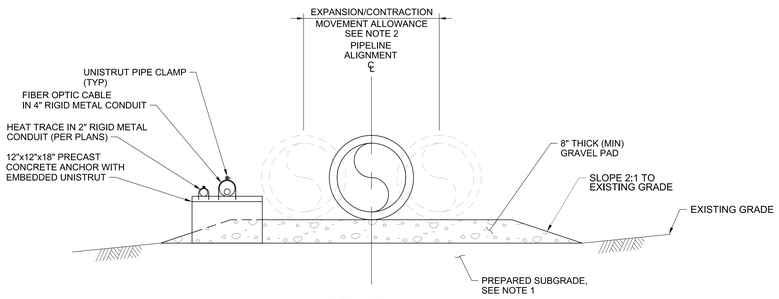

SECTION A
NTS

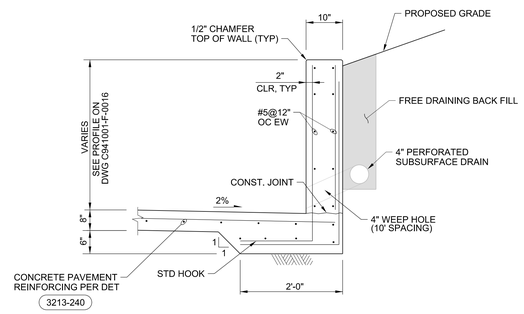

D CONCRETE WALL SECTION
NTS

C941001-F-0014
C941001-F-0016

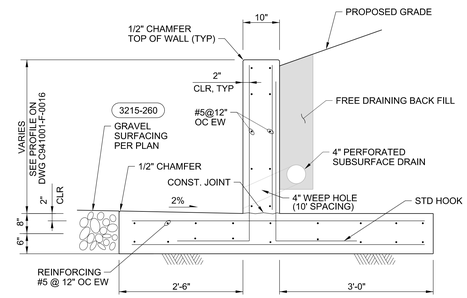

E CONCRETE WALL SECTION
NTS

C941001-F-0014
C941001-F-0016

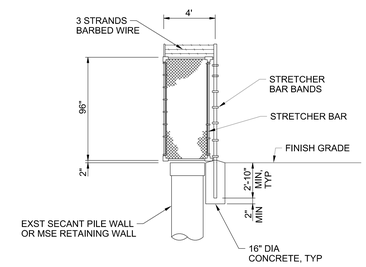

4 FENCE WING PANEL
NTS

C941001-F-0013

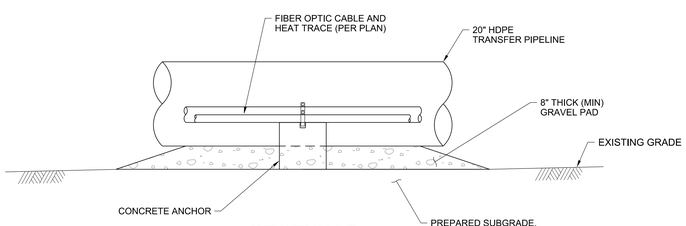

SECTION B
NTS

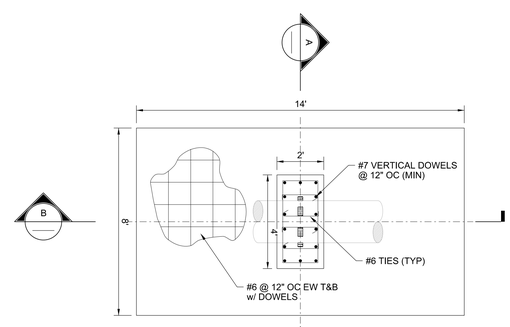

PLAN

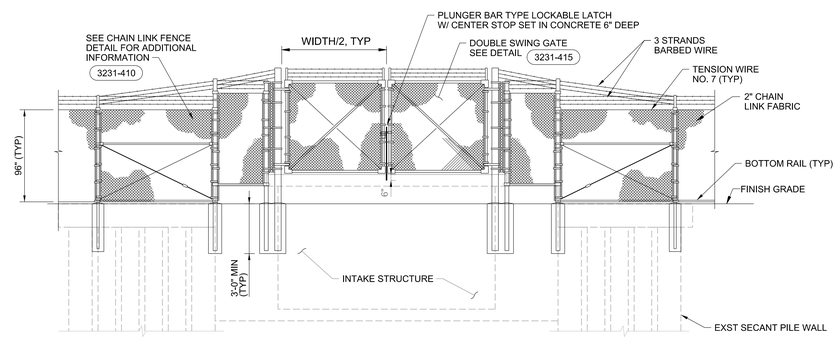

EXPANDED ELEVATION
NTS

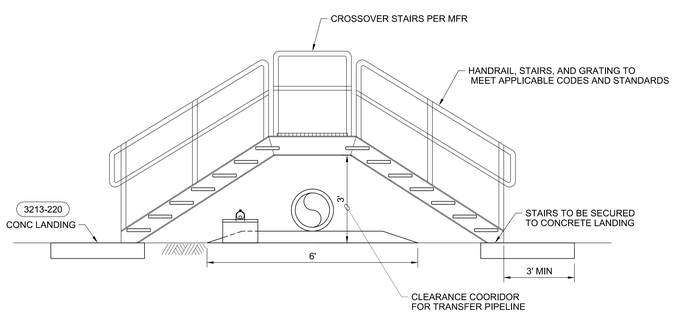

2 CROSSOVER STAIRS
NTS

C941001-F-0019
THRU
C941001-F-0027

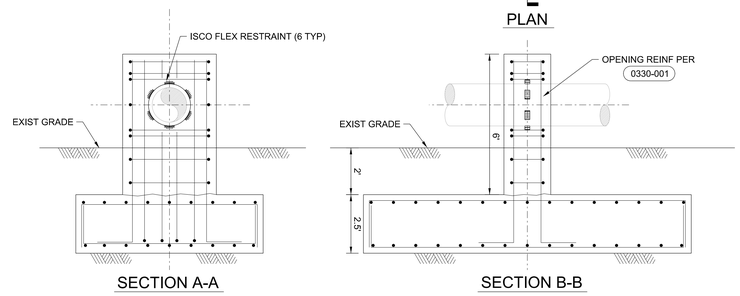

SECTION A-A

SECTION B-B

5 CONCRETE HDPE PIPE ANCHOR
NTS

C941001-F-0019
C941001-F-0027

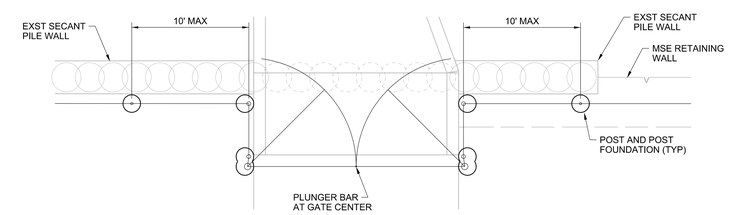

3 INTAKE STRUCTURE FENCE AND DOUBLE SWING GATE
NTS

C941001-F-0013

NOTE:

POST SETS PER MANUFACTURER'S RECOMMENDATIONS FOR GATE POST SIZES.

UCOR
URS | CH2M Oak Ridge LLC

OF200 Mercury Treatment Facility
Designed by URS|CH2M Oak Ridge LLC (UCOR) for the Department of Energy
Oak Ridge Office of Environmental Management under U. S. Government contract DE-SC-0004645

Y-12 National Security Complex managed and operated by Consolidated Nuclear Security, LLC for the Department of Energy under U.S. Government contract DE-NA0001942 • Oak Ridge, Tennessee

PROJECT NAME:
OF200 MERCURY TREATMENT FACILITY

CIVIL
HEADWORKS AND TRANSFER PIPELINE SECTIONS AND DETAILS

USE	DISC	DT	DC	CM	SYSTEM	STAT	SIZE	BLDG	FL	CLASS
3	C	S	N	NC	FAC	AR	E	9410-01	X	U

SH.	OF	TYPE		PART	REV
1	1	DD	C941001-F-0029	000	0

DRW	R TOWNSEND	06/16/17
CHKR	D PETERSON	06/16/17
DE	R TOWNSEND	06/16/17
DVR		
DM	L ELLIS	06/16/17
PE	Teresa J. Pierce, P.E.	

RPE
ROBERT A. TOWNSEND
REGISTERED ENGINEER
AGRICULTURE
No. 119903
STATE OF TENNESSEE
6/16/17

PART	REV	DESCRIPTION	DRW	CHKR	DE	DVR	DM	DATE	PE	DATE	REVISION APPROVALS	WE	AR	CV	ST	HV	EM	FP	PD	EE	IE	M	NP
	0	ISSUED FOR CONSTRUCTION	RT	DP	RT		LE	06/2017															

REVISION OR ISSUE PURPOSE — SQUAD CHECK

REV. DATE — DRAWING APPROVALS — DATE

THIS DRAWING IS LOANED FOR SOLE USE OF THE INTENDED RECIPIENT AND ONLY FOR THE LIMITED PURPOSES FOR WHICH IT WAS PROVIDED. USE BY OTHER ENTITIES OR FOR OTHER PURPOSES IS PROHIBITED AND AT THE USER'S OWN RISK. DRAWINGS ARE TO BE RETURNED UPON REQUEST OF THE FORWARDING RECIPIENT.

ISSUED FOR CONSTRUCTION

662886

2017\06\21 11:20:48 AM
C941001-F-0029.dgn