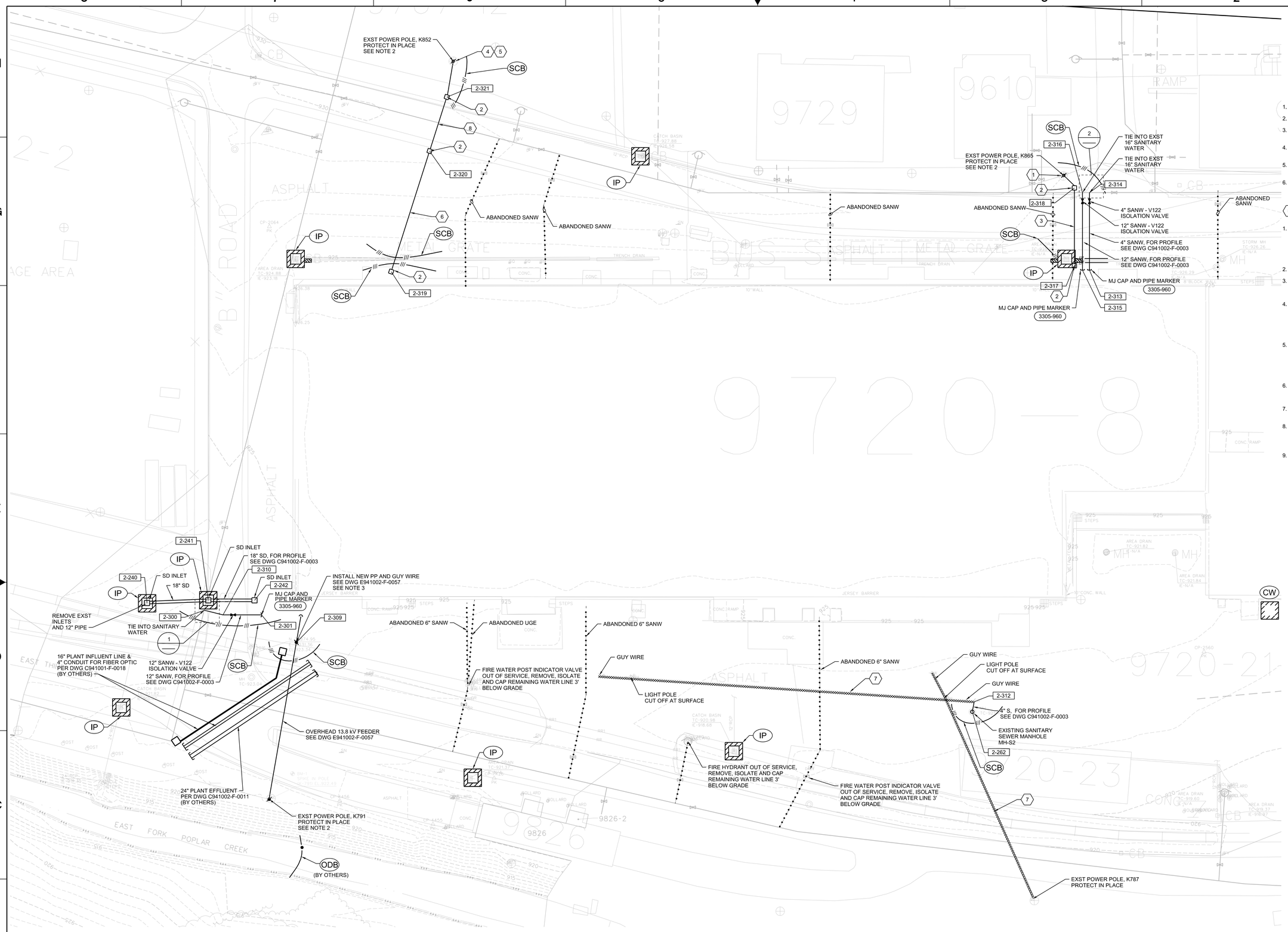

N

0 20 40 60

Scale In Feet
1" = 20'

NOTES

1. FOR CONTROL POINT TABLE, SEE DWG C941002-F-0014.
2. EXISTING Y-12 POWER POLE TO BE SUPPORTED AS REQUIRED BY OWNER.
3. NEW GUY WIRES SHALL BE INSTALLED TO AVOID FUTURE INTERFERENCES WITH SITE FENCES, PAVING, FOUNDATIONS, OR OTHER UTILITIES.
4. ADD MARKING AT THE SURFACE WHERE END CAPS FOR UNDERGROUND UTILITIES ARE LOCATED.
5. PROTECT ALL EXISTING UTILITIES (NOT SPECIFICALLY IDENTIFIED FOR REMOVAL) DURING CONSTRUCTION.
6. SANW TIE-IN BY Y-12.

KEYNOTES

1. POLE LOCATION IDENTIFIED FOR ONE SIDE OF CLASS-A CONNECTION OF TREATMENT FACILITY FIRE ALARM SYSTEM (FAS) TO Y-12 FIRE ALARM FIBER OPTIC NETWORK. CONTRACTOR SHALL PROVIDE (1) [1-1/4" SCH-40, PULLSTRING] POLE RISER SWEEP-UP (2605-999) OF CONDUIT TO HEIGHT AS COORDINATED WITH Y-12 FIRE PROTECTION.
2. 4'X4'X4' ELECTRICAL HANDHOLE (2605-444)
3. INSTALL: (4) [1-1/4" SCHD-40, PULLSTRING]. PROVIDE CONCRETE ENCASEMENT OF CONDUIT DUCT BANK (2605-400b)
4. POLE LOCATION IDENTIFIED FOR ONE SIDE OF CLASS-A CONNECTION OF TREATMENT FACILITY FIRE ALARM SYSTEM (FAS) TO Y-12 FIRE ALARM FIBER OPTIC NETWORK. CONTRACTOR SHALL PROVIDE (1) [1-1/4" SCHD-40, PULLSTRING] POLE RISER SWEEP-UP (2605-999) OF CONDUIT TO HEIGHT AS COORDINATED WITH Y-12 FIRE PROTECTION.
5. POLE LOCATION IDENTIFIED FOR CONNECTION OF TREATMENT FACILITY GENERAL COMMUNICATIONS FIBER AND COPPER CABLES. CONTRACTOR SHALL PROVIDE (1) [4" SCHD-40, 3-3 CELL RATED MAXCELL INNERDUCT] POLE RISER SWEEP-UP (2605-999) OF CONDUIT TO HEIGHT AS COORDINATED WITH Y-12 COMMUNICATIONS CONTRACTOR.
6. INSTALL: (2) [1-1/4" SCHD-40, PULLSTRING], (1) [4" SCHD-40, 3-3 CELL RATED MAXCELL INNERDUCT].
7. REMOVE EXISTING OVERHEAD POWER, TELEPHONE, COMMUNICATIONS AND GUY WIRES. COORDINATE ISOLATION AND AIR GAP WITH OWNER.
8. INSTALL: (2) [1-1/4" SCHD-40, PULLSTRING], (1) [4" SCHD-40, 3-3 CELL RATED MAXCELL INNERDUCT]. PROVIDE CONCRETE ENCASEMENT OFCONDUIT DUCT BANK (2605-400b)
9. ADD PIPE MARKER (3305-960) AT THE SURFACE WHERE END CAPS FOR UNDERGROUND UTILITIES ARE LOCATED.

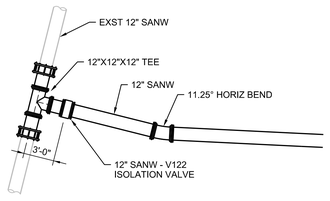

1 DETAIL
NTS

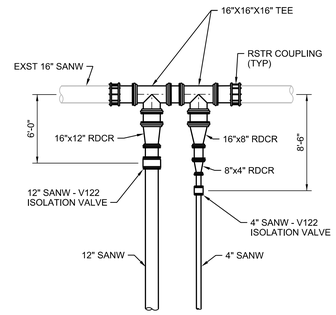

2 DETAIL
NTS

UCOR
URS | CH2M
Oak Ridge LLC

OF200 Mercury Treatment Facility
Designed by URS|CH2M Oak Ridge LLC (UCOR) for the Department of Energy
Oak Ridge Office of Environmental Management
under U. S. Government contract DE-SC-0004645

Y-12 National Security Complex managed and operated by Consolidated Nuclear Security, LLC for the Department of Energy under U.S. Government contract DE-NA0001942 • Oak Ridge, Tennessee •

DRW	R TOWNSEND	06/13/17
CHKR	D PETERSON	06/13/17
DE	R TOWNSEND	06/13/17
DVR		
DM	L ELLIS	06/16/17
PE	Teresa J. Pierce, P.E.	

RPE

PROJECT NAME:
OF200 MERCURY TREATMENT FACILITY

CIVIL
TREATMENT FACILITY
UTILITIES RELOCATION PLAN

USE	DISC	DT	DC	CM	SYSTEM	STAT	SIZE	BLDG	FL	CLASS
3	C	U	X	NC	FAC	AR	E	9410-02	A	U

SH.	OF	TYPE		PART	REV
1	1	DD	C941002-F-0002	000	0

PART	REV	DESCRIPTION	DRW	CHKR	DE	DVR	DM	DATE	PE	DATE	WE	AR	CV	ST	HV	EM	FP	PD	EE	IE	M	NP
	0	ISSUED FOR CONSTRUCTION	RT	DP	RT		LE	06/2017														

REVISION OR ISSUE PURPOSE — REVISION APPROVALS — SQUAD CHECK

REV.	DATE

DRAWING APPROVALS — DATE

ISSUED FOR CONSTRUCTION

662886

THIS DRAWING IS LOANED FOR SOLE USE OF THE INTENDED RECIPIENT AND ONLY FOR THE LIMITED PURPOSES FOR WHICH IT WAS PROVIDED. USE BY OTHER ENTITIES OR FOR OTHER PURPOSES IS PROHIBITED AND AT THE USER'S OWN RISK. DRAWINGS ARE TO BE RETURNED UPON REQUEST OF THE FORWARDING RECIPIENT.

2017\06\16 11:37:10 AM
C941002-F-0002.dgn