GENERAL NOTES

A. ALL NEW MATERIALS SHOWN ON THIS SHEET ARE IN THE CONTRACT SCOPE AND ARE TO BE FURNISHED BY THE UTILITIES RELOCATION SUBCONTRACTOR.

B. INSTALLATION OF MATERIALS SHOWN ON THIS SHEET IS TO PERFORMED BY Y-12.

C. DETAILS OF THE INSTALLATION MAY VARY FROM WHAT IS SHOWN HERE. DIMENSION ARE PRELIMINARY AND SUBJECT TO CHANGE.

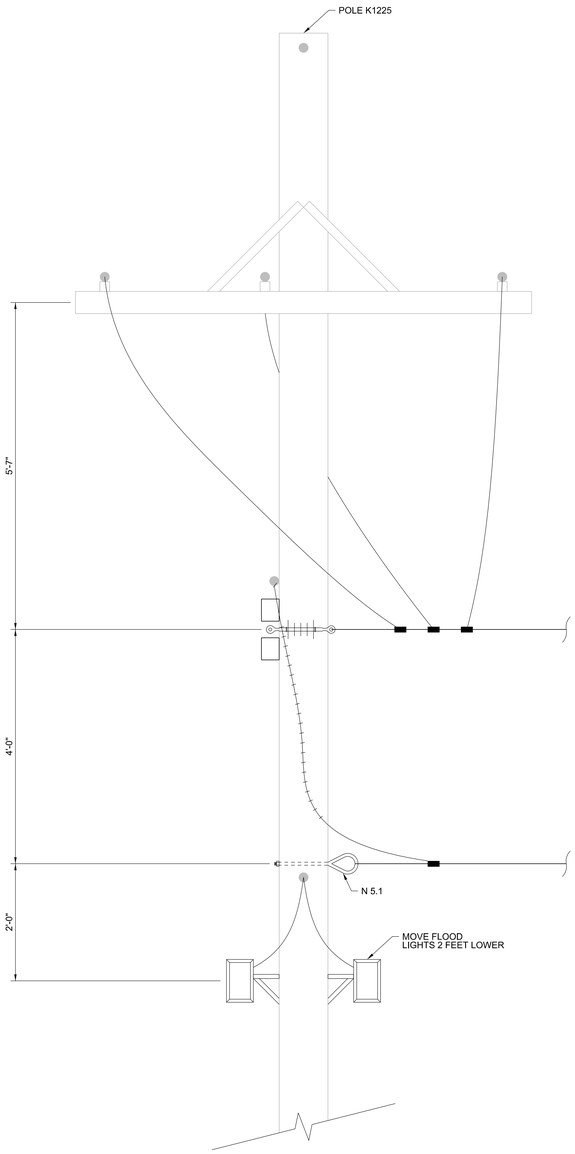

LOOKING EAST
3/8" = 1'-0"

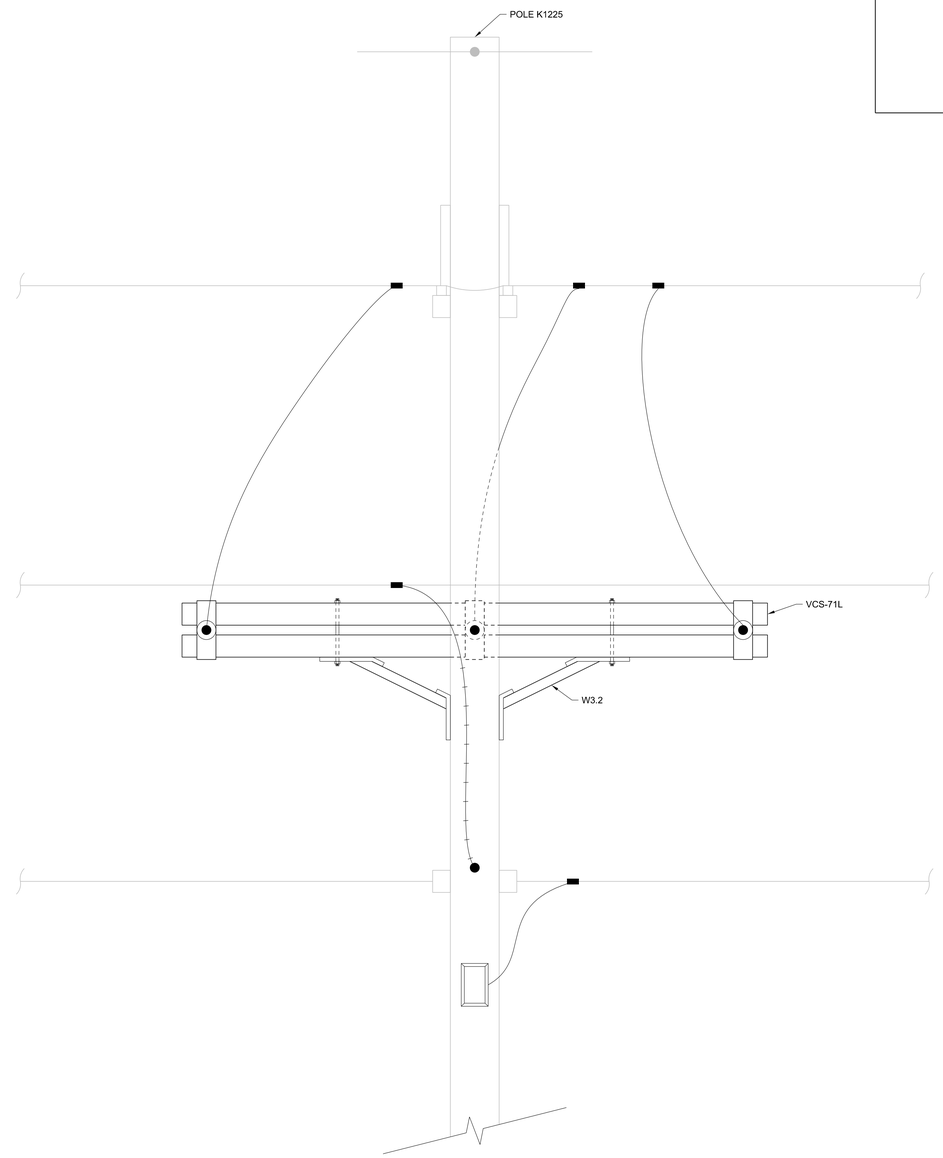

LOOKING NORTH
3/8" = 1'-0"

THIS DRAWING IS LOANED FOR SOLE USE OF THE INTENDED RECIPIENT AND ONLY FOR THE LIMITED PURPOSES FOR WHICH IT WAS PROVIDED. USE BY OTHER ENTITIES OR FOR OTHER PURPOSES IS PROHIBITED AND AT THE USER'S OWN RISK. DRAWINGS ARE TO BE RETURNED UPON REQUEST OF THE FORWARDING RECIPIENT.

PART	REV	DESCRIPTION	DRW	CHKR	DE	DVR	DM	DATE	PE	DATE
	0	ISSUED FOR CONSTRUCTION	SF	BW	DE		LE	06/2017		

REVISION OR ISSUE PURPOSE — REVISION APPROVALS

SQUAD CHECK: WE AR CV ST HV EM FP PD EE IE M NP

RPE: JAMES KEITH LANDMAN, REGISTERED ENGINEER, STATE OF ALASKA, No. 11823, STATE OF TENNESSEE — 6-26-17

REV.	DATE

DRAWING APPROVALS

		DATE
DRW	S FLASKA	06/13/17
CHKR	B WILKINSON	06/13/17
DE	J LANDMAN	06/13/17
DVR		
DM	L ELLIS	06/16/17
PE	Teresa J. Pierce, P.E.	

UCOR URS | CH2M Oak Ridge LLC

OF200 Mercury Treatment Facility

Designed by URS|CH2M Oak Ridge LLC (UCOR) for the Department of Energy
Oak Ridge Office of Environmental Management
under U. S. Government contract DE-SC-0004645

Y-12 National Security Complex managed and operated by Consolidated Nuclear Security, LLC for the Department of Energy under U.S. Government contract DE-NA0001942
« Oak Ridge, Tennessee »

PROJECT NAME:
OF200 MERCURY TREATMENT FACILITY

ELECTRICAL
POLE-TOP DETAILS AT K-1225

USE	DISC	DT	DC	CM	SYSTEM	STAT	SIZE	BLDG	FL	CLASS
3	E	Y	K	NC	FAC	AR	E	9410-01	X	U

SH.	OF	TYPE		PART	REV
1	1	DD	E941001-F-0037	000	0

662886

ISSUED FOR CONSTRUCTION

2017\06\16 1:40:46 PM
E941001F0037.dgn