Appendix B

NUHOMS®-MP187 MULTI-PURPOSE CASK DRAWINGS

Appendix B

TABLE OF CONTENTS

Drawing Number	Drawing Title	Number of Sheets
NUH-05-4000NP	General Arrangement	2
NUH-05-4001NP	Main Assembly	6
NUH-05-4002NP	Impact Limiters	2
NUH-05-4003NP	On-Site Transfer Arrangement	2
NUH-05-4006NP	Skid/Personnel Barrier	2

REV	DESCRIPTION:	DRAWN:	DESIGN:	CHECK:	P.E.	E.M.	P.M.
0	INITIAL ISSUE.	MRR 9/25/93	CT 10/8/93	DM 10/8/93	RDQ 10/8/93	RDQ 10/8/93	MT 10/8/93
1	REVISED IN RESPONSE TO FIRST ROUND NRC QUESTIONS	WRE 2/27/95	/ /	/ /	/ /	/ /	/ /

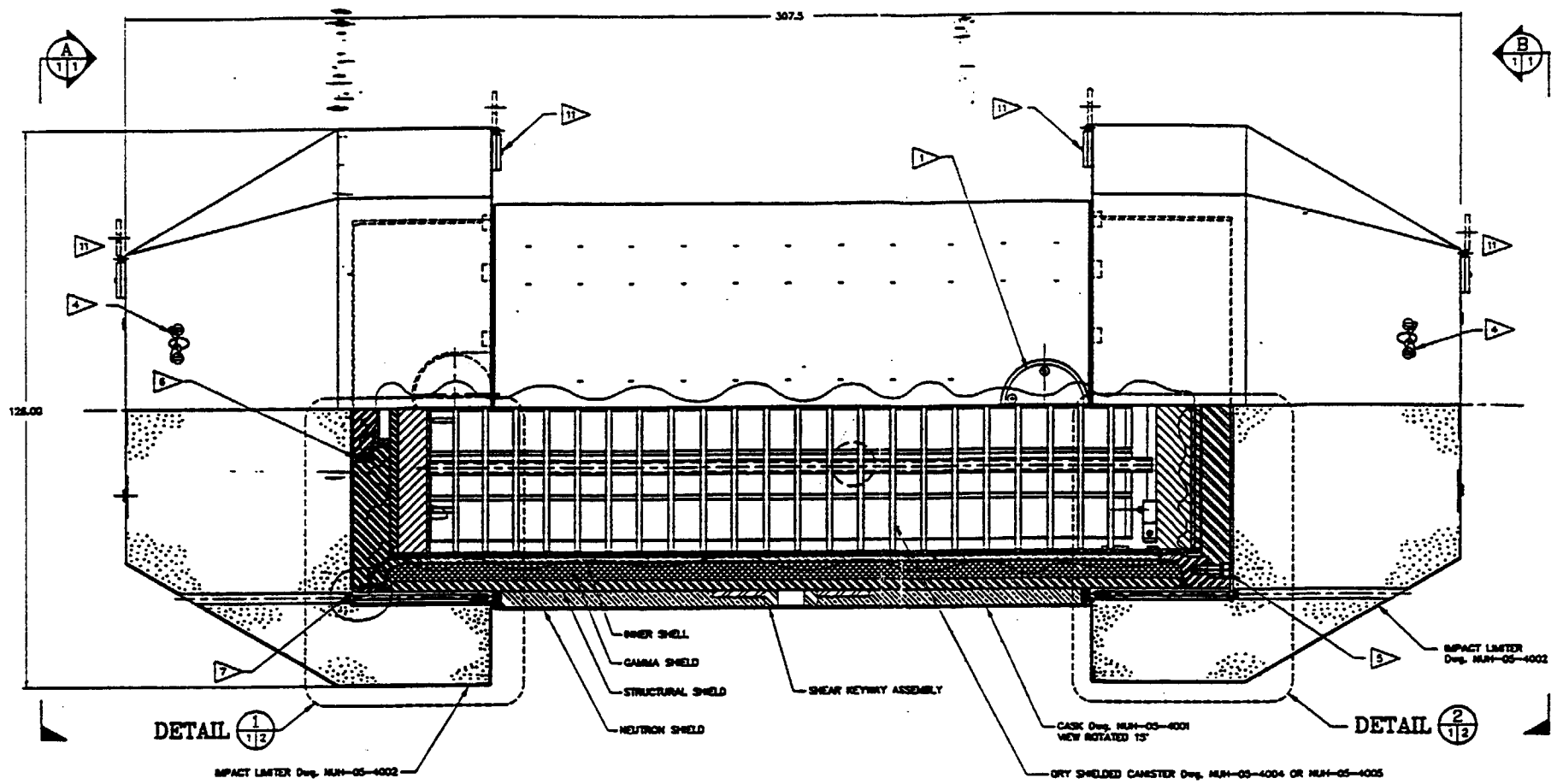

NOTES:

1. REMOVE TRUNNIONS AND INSTALL TRUNNION SOCKET COVER PLATES PRIOR TO TRANSPORT.
2. REFERENCE DATA:

EMPTY CASK WEIGHT:	158,600 lbs.
LOADED FO DSC WEIGHT	79,400 lbs.
LOADED FC DSC WEIGHT	79,000 lbs.
LOADED FF DSC WEIGHT	73,100 lbs.
IMPACT LIMITERS:	31,600 lbs.
GROSS WEIGHT:	271,000 lbs.

3. IDENTIFICATION: CASK SHALL BE IDENTIFIED IN ACCORDANCE WITH THE REQUIREMENTS OF 10 CFR 71.85 (c).
4. TAMPER INDICATING SEAL SHALL BE INSTALLED AT ONE LOCATION OVER AN IMPACT LIMITER ATTACHMENT BOLT FOR EACH IMPACT LIMITER.
5. 2 INCH DIA. CADMIUM PLATED TOP CLOSURE BOLTS SHALL BE PRELOADED TO 134,500±5% lbs.
6. 1 INCH CADMIUM PLATED RAM ACCESS BOLTS SHALL BE PRELOADED TO 28,500±5% lbs.
7. TORQUE IMPACT LIMITER ATTACHMENT BOLTS (1-1/4-7UNC) TO 270-330 FT-LBS.
8. TORQUE CADMIUM PLATED DRAIN, VENT AND TEST PORT 3/4-10UNC BOLTS TO 120±20 FT-LBS.
9. LARGE CONTAINMENT SEALS SHALL BE HELICOFLEX HN O-RINGS. SMALL CONTAINMENT SEALS SHALL BE METALLIC O-RINGS. NON CONTAINMENT SEALS MAY BE ELASTOMERIC OR METALLIC O-RINGS.
10. O-RING MAY BE LIGHTLY COATED WITH VACUUM GREASE PRIOR TO ASSEMBLY. SEAL SURFACES MAY ALSO, AS AN OPTION, BE COATED WITH A THIN COAT OF VACUUM GREASE.
11. INSTALL BOLT AND FLAT WASHER IN IMPACT LIMITER LIFTING LUGS PRIOR TO TRANSPORT.
12. SCRIBE 1 INCH LONG BY 1/16 INCH DEEP DSC ALIGNMENT MARKS ON INNER SURFACE OF TOP FORGING ADJACENT TO TOP COVER PLATE SEAL AREA AT 0°, 90°, 180° AND 270° AZIMUTH AND CASK TOP SURFACE AS SHOWN.
13. CHECK NEUTRON SHIELD RUPTURE DISCS PRIOR TO INSTALLATION OF IMPACT LIMITERS TO ENSURE THEY ARE NOT DAMAGED.
14. ALL BOLTS SHALL BE LUBRICATED WITH NUCLEAR GRADE NICKEL BASED LUBRICANT.
15. GAPS SPECIFIED ARE BASED ON CONCENTRIC CENTERLINES FOR DSC AND CASK.
16. TORQUE CADMIUM PLATED TRUNNION ATTACHMENT BOLTS TO 200±20 FT-LBS.

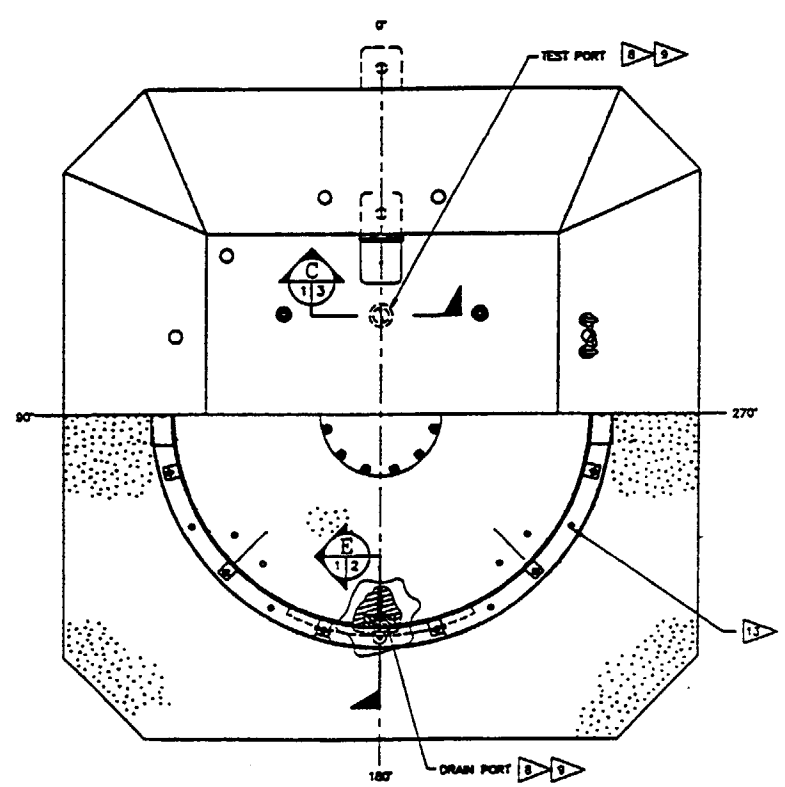

VIEW A 1/1

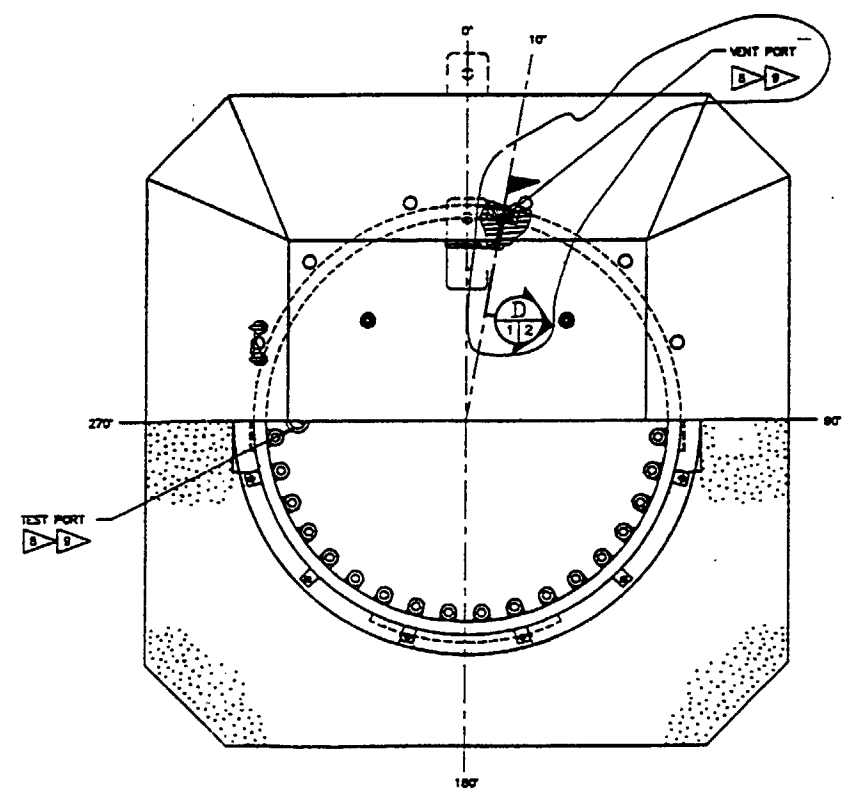

VIEW B 1/1

Patents Pending and
U.S. Patent No. 4,780,269
VECTRA Technologies, Inc.

TOT QTY NO. REQ'D	PART OR IDENTIFYING NO.	NOMENCLATURE OR DESCRIPTION	MATERIAL SPECIFICATION
PARTS LIST			

ALL DIMENSIONS ARE APPLICABLE AT 68°F AND ALL TOLERANCING APPLIES AFTER WELDING AND FINAL MACHINING UNLESS NOTED OTHERWISE.

DIMENSIONS ARE IN INCHES AND DECIMALS UNLESS NOTED OTHERWISE. DIMENSIONING AND TOLERANCING IN ACCORDANCE WITH Y14.5M-1982.

BREAK AND DEBURR ALL SHARP EDGES .02

3rd ANGLE PROJECTION

DO NOT SCALE DRAWING

VECTRA
Fuel Services - San Jose, California

TITLE: SAFETY ANALYSIS REPORT
NUHOMS®-MP187
MULTI-PURPOSE CASK
GENERAL ARRANGEMENT

FILE NO.	DWG. NO.	SCALE	SHEET	REV. NO.
NUH005.4000	NUH-05-4000NP	NONE	1 OF 2	1

E (34 X 44)

REV	DESCRIPTION:	DRAWN:	DESIGN:	CHECK:	P.E.	E.M.	P.M.
	(SEE SHEET 1 FOR REVISIONS)						

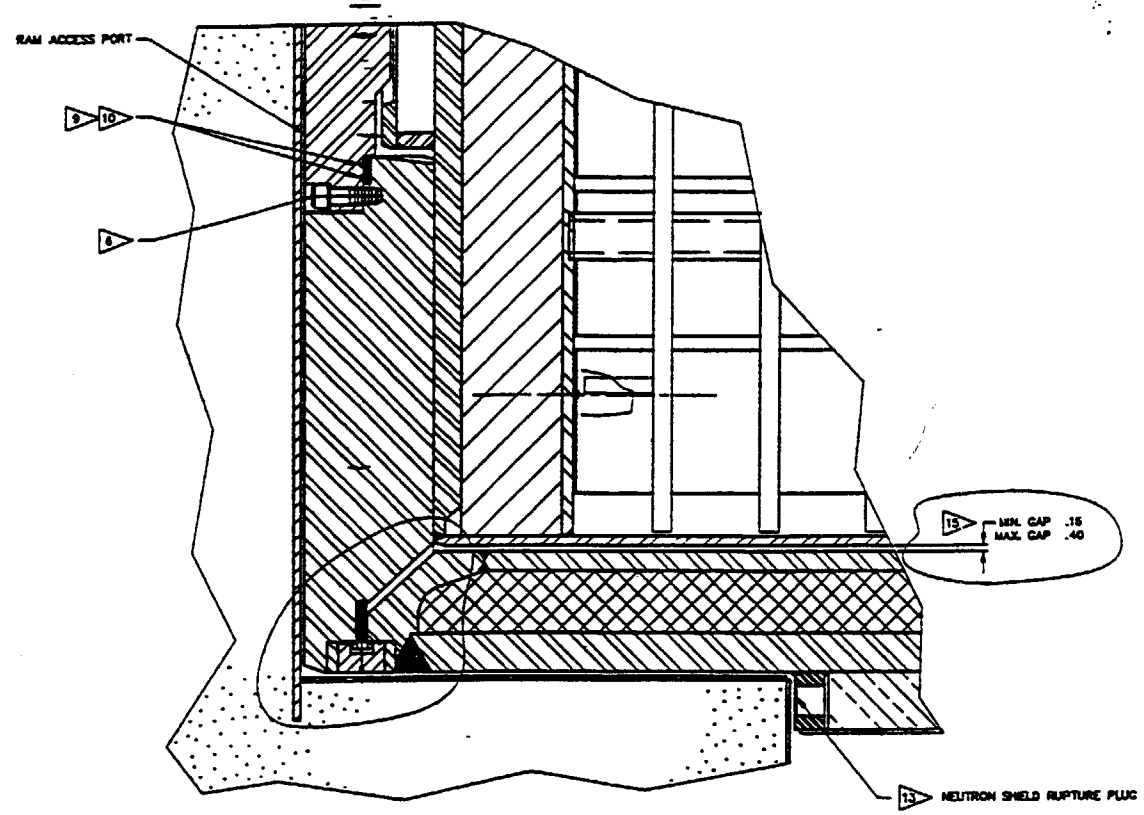

DETAIL 1/12

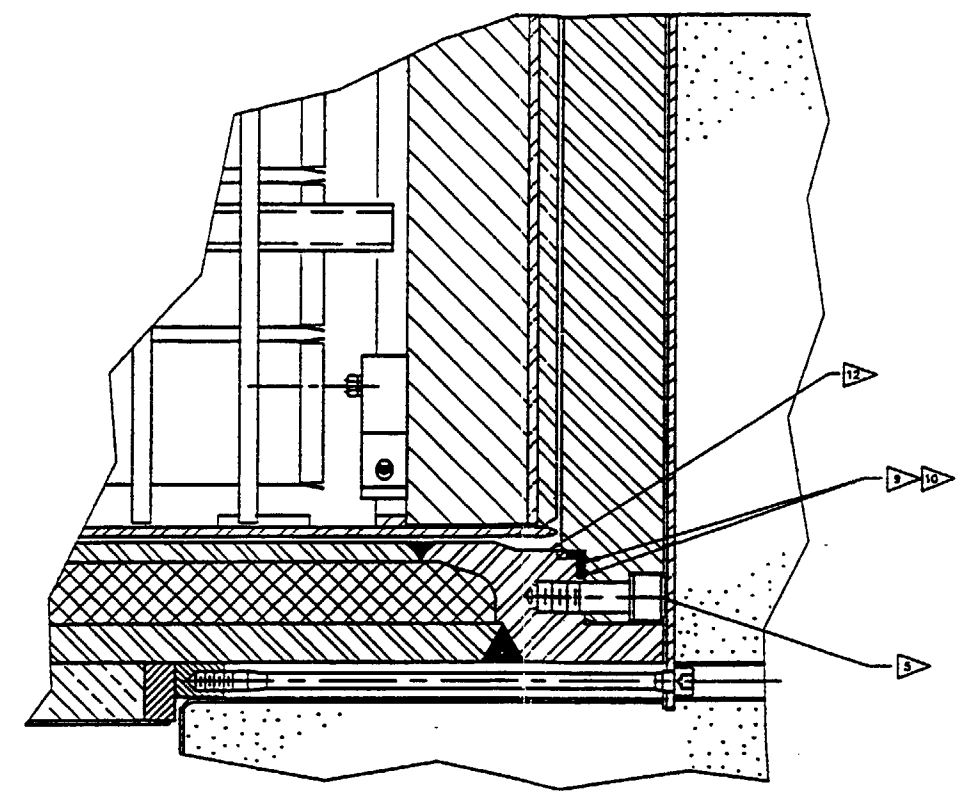

DETAIL 2/12

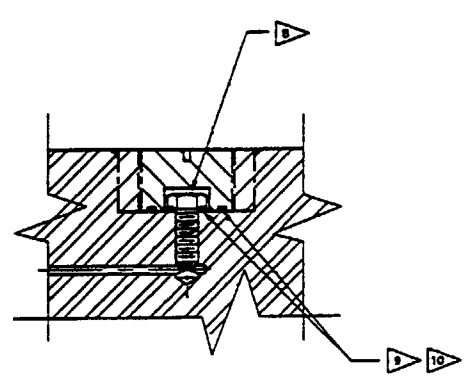

SECTION C/12
TEST PORT DETAIL

AZ. 0° BOTTOM HEAD FOR RAM ACCESS PENETRATION SEALS.

AZ. 90° TOP CLOSURE PLATE FOR TOP CORER PLATE SEALS.

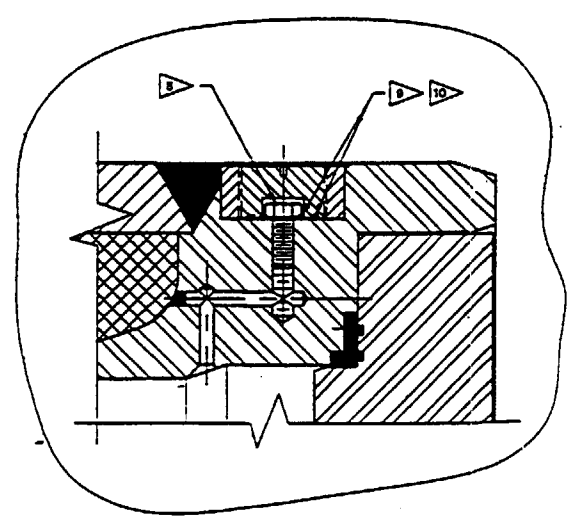

SECTION D/12
VENT PORT DETAIL
AZ. 10° TOP FLANGE

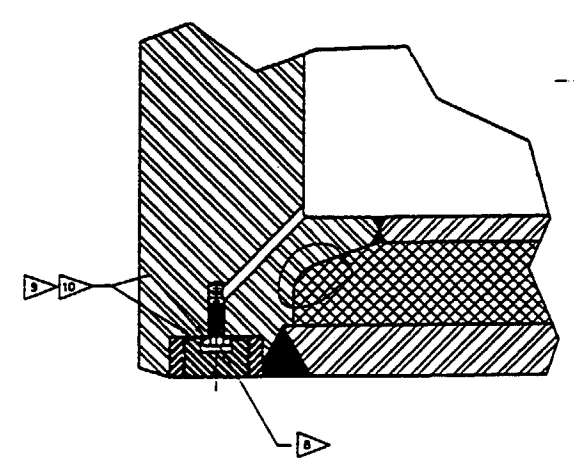

SECTION E/12
DRAIN PORT DETAIL
VIEW ROTATED CW 135°
AZ. 315°

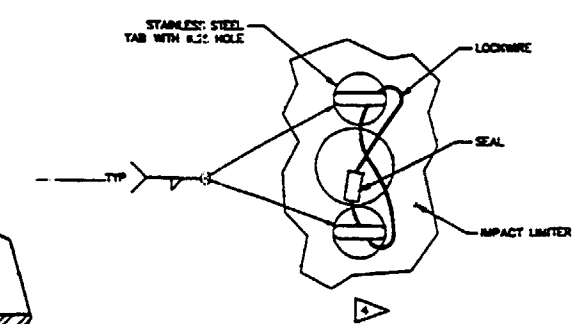

TAMPER INDICATOR SEAL

ITEM NO.	QTY REQ'D	PART OR IDENTIFYING NO.	NOMENCLATURE OR DESCRIPTION	MATERIAL SPECIFICATION

PARTS LIST

ALL DIMENSIONS ARE APPLICABLE AT SET AND ALL TOLERANCING APPLIES AFTER WELDING AND FINAL MACHINING UNLESS NOTED OTHERWISE.

DIMENSIONS ARE IN INCHES AND DEGREES UNLESS NOTED OTHERWISE. DIMENSIONING AND TOLERANCING IN ACCORDANCE WITH Y14.5M-1982.

BREAK AND DEBURR ALL SHARP EDGES .02

3rd ANGLE PROJECTION

DO NOT SCALE DRAWING

VECTRA
Fuel Services – San Jose, California

SAFETY ANALYSIS REPORT
NUHOMS®-MP187
MULTI-PURPOSE CASK
GENERAL ARRANGEMENT

FILE NO.	DWG. NO.	SCALE	SHEET	REV. NO.
NUH005.4000	NUH-05-4000NP	NONE	2 OF 2	1

Patents Pending and
U.S. Patent No. 4,780,269
VECTRA Technologies, Inc.

REV	DESCRIPTION:	DRAWN:	DESIGN:	CHECK:	P.E.	E.M.	P.M.
0	INITIAL ISSUE	MRR 9/28/93	CJT 10/8/93	IDM 10/8/93	RDQ 10/8/93	RDQ 10/8/93	MT 10/8/93
1	REVISED IN RESPONSE TO FIRST ROUND NRC QUESTIONS	RGP 2/28/95	CJT 2/28/95	IDM 2/28/95	IDM 2/28/95	BDT 5/25/95	MT 5/26/95
2	REVISED NSP SUPPORT ANGLES & SUPPORT RINGS, ADDED HELICOILS	RGP 1/17/96	UF 1/17/96	IDM 1/17/96	IDM 1/17/96	IDM/MMM 1/17/96	UF 1/17/96
3	INCORPORATED ECN No 96-0065	RGP 2/1/96	//	//	//	//	//

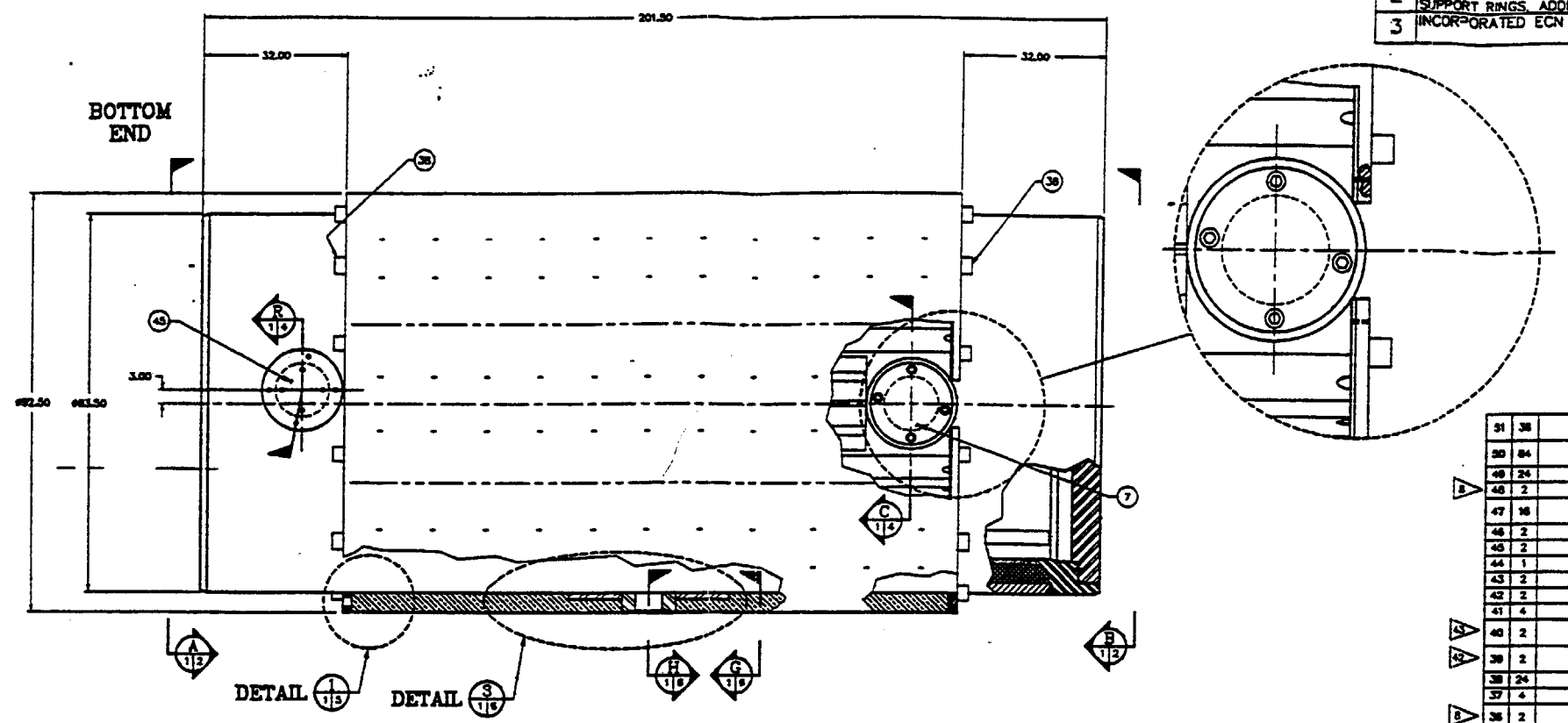

MAIN ASSEMBLY

NOTES:

1. ALL WELDING SHALL BE PERFORMED IN ACCORDANCE WITH NB-4300 AND SECTION IX. WELDING PROCEDURES SHALL BE QUALIFIED IN ACCORDANCE WITH NB-4330 AND SECTION IX OF THE ASME CODE.

2. ALTERNATIVE WELD JOINT GEOMETRY MAY BE SUBSTITUTED FOR WELDS SHOWN WHERE ACCEPTABLE BY THE ASME CODE.

3. ALL WELDS SHALL BE LIQUID PENETRANT INSPECTED ON FINAL PASS IN ACCORDANCE WITH ASME CODE, SECTION III, DIVISION I, SUBSECTION NB, ARTICLE NB-5000 AND SECTION V, ARTICLE 6.

4. RADIOGRAPHIC INSPECTION SHALL BE PERFORMED IN ACCORDANCE WITH ASME CODE SECTION III, DIVISION I, SUBSECTION NB, ARTICLE NB-5000 AND SECTION V, ARTICLE 2.

5. ALL WELDS SHALL BE VISUALLY EXAMINED IN ACCORDANCE WITH NB 4424 OF ASME CODE. VISUAL WELD INSPECTORS SHALL BE QUALIFIED PER ASME CODE.

6. INDICATED WELDS SHALL BE LIQUID PENETRANT INSPECTED ON ROOT AND FINAL PASSES IN ACCORDANCE WITH ASME CODE, SECTION III, DIVISION 1, SUBSECTION NB, ARTICLE NB-5000, AND SECTION V, ARTICLE 6.

7. (PROPRIETARY)

8. CADMIUM PLATED.

9. OPTIONAL CADMIUM, CHROME OR NICKEL PLATE SURFACE TO A THICKNESS OF .0005 MIN/.001 MAX.

10. (PROPRIETARY)

12. LEAD TO BE CAST IN PLACE, CONFORMING TO ASTM B29-79.

13. LEAD SHIELDING INTEGRITY SHALL BE DETERMINED BY GAMMA SCAN, AFTER COOL DOWN TO AMBIENT TEMPERATURE. ACCEPTANCE CRITERIA PER SECTION 8.0 OF SAR.

14. (PROPRIETARY)

15. (PROPRIETARY)

16. LOCATION OF FULL PENETRATION LONGITUDINAL AND CIRCUMFERENTIAL SEAM WELDS IN INNER SHELL (ITEM 1), BOTTOM STRUCTURAL SHELL (ITEM 3), AND TOP STRUCTURAL SHELL (ITEM 4) MAY BE MADE AT FABRICATOR'S OPTION. LENGTH OF ITEM 4 MAY BE INCREASED TO ELIMINATE ADDITIONAL CIRCUMFERENTIAL WELD IN ITEM 3. ITEM 4 SHALL BE NOT LESS THAN 38.88 INCHES LONG.

17. DESIGN PRESSURE IS 50 psig. CASK CONTAINMENT BOUNDARIES SHALL BE SUBJECTED TO AN INTERNAL TEST PRESSURE EQUAL TO A MINIMUM OF 150% OF THE DESIGN PRESSURE PER 10 CFR 71.85(b).

18. CASK CONTAINMENT BOUNDARIES SHALL BE HELIUM LEAK TESTED TO DEMONSTRATE A LEAKAGE RATE NOT TO EXCEED 1 X 10^{-7} STANDARD CUBIC CENTIMETERS PER SECOND, IN ACCORDANCE WITH ANSI N14.5-1987.

19. INDICATED HOLES ARE PROVIDED FOR THE INSTALLATION OF A I/O HANDLING FIXTURE FOR LIFTING AND HANDLING OF THE I/O. EACH LOCATION SHALL BE STENCILED OR OTHERWISE LABELED WITH THE FOLLOWING WARNING: "I/O LIFT ONLY".

20. CASK INNER AND STRUCTURAL SHELLS SHALL COMPLY WITH THE TOLERANCE REQUIREMENTS OF ASME CODE, SECTION III, DIVISION I, SUBSECTION NE, ARTICLE NE-4220.

21. ALL SHELL JOINTS SHALL BE MADE IN ACCORDANCE WITH ASME CODE, SECTION III, DIVISION I, SUBSECTION NB, ARTICLE NB-4230.

22. ANY ADDITIONAL WELDS REQUIRED TO JOIN SHELL MATERIALS SHALL BE FULL PENETRATION WELDS INSPECTED PER NOTES 3, 4 & 5.

23. (PROPRIETARY)

24. (PROPRIETARY)

25. (PROPRIETARY)

26. (PROPRIETARY)

27. SEAL MATERIAL METALLIC HELICOFLEX HN SERIES WITH ALUMINUM JACKET STAINLESS STEEL LINER AND INCONEL SPRING.

28. (PROPRIETARY)

29. UPPER CASK TRUNNIONS SHALL BE LOAD TESTED TO 150% OF THE MAXIMUM WORKING LOAD PRIOR TO JOINING INNER AND STRUCTURAL SHELLS.

30. ALL EXPOSED WELDS MAY BE GROUND SMOOTH TO ENHANCE CASK DECONTAMINATION.

31. (PROPRIETARY)

32. (PROPRIETARY)

33. (PROPRIETARY)

34. (PROPRIETARY)

35. (PROPRIETARY)

36. FOR ON-SITE FUEL TRANSFER OPERATIONS PERFORMED UNDER 10CFR72 REQUIREMENTS, O-RINGS 25, 28, AND 29 ARE NOT REQUIRED TO BE INSTALLED AND AN ELASTOMERIC O-RING MAY BE USED FOR O-RING ITEM 28.

37. BACKING BAR MAY BE FORMED BY MACHINING A RECESS IN ITEMS 12 & 13 NOT TO EXCEED 0.50" WIDE.

38. A ONE SIDED FULL PENETRATION BEVEL WELD WITH 3/8" MAX ROOT GAP PLUS 1/2" FILLET MAY BE SUBSTITUTED FOR DOUBLE BEVEL WELD.

39. ASME SA-182, TYPE F304-18 FORGINGS MAY BE SUBSTITUTED FOR SPECIFIED PLATE MATERIAL.

40. (PROPRIETARY)

41. (PROPRIETARY)

42. SILVER PLATED STAINLESS STEEL TUBULAR O-RING CROSS-SECTION.

43. METALLIC PER NOTE 42 OR ELASTOMERIC O-RING.

44. THREAD INSERTS SHALL MEET THE REQUIREMENTS OF MIL-S-8879 [UN]. ALL THREAD INSERTS SHALL BE INSTALLED IN ACCORDANCE WITH MANUFACTURER'S INSTRUCTIONS.

45. INSIDE SURFACES OF CASK TOP CLOSURE PLATE (ITEM 24) AND BOTTOM END CLOSURE (ITEM 2) MAY BE DRILLED AND TAPPED 4- 3/4-10UNC-2B X 2" DEEP, OR SMALLER. HOLES SHALL BE FILLED WHEN CASK IS IN USE.

46. THE INNER SHELL CONSISTS OF THREE SECTIONS. THE LOWER AND UPPER SHELL SECTIONS ARE 42.00 (MINIMUM) INCHES LONG AND ARE FABRICATED TO ASME SA-240, TYPE 304-19 MATERIAL SPECIFICATION. THE MIDDLE SHELL SECTION IS FABRICATED TO ASME SA-240, TYPE 304 MATERIAL SPECIFICATION.

ITEM NO.	QTY REQ'D	PART OR IDENTIFYING NO.	NOMENCLATURE OR DESCRIPTION	MATERIAL SPECIFICATION
51	38		SCREW THREAD INSERT 2-12UN X 5.80 LG	AMS7245 STAINLESS STEEL
50	84		SCREW THREAD INSERT 1-8UNC X 2.00 LG	AMS7245 STAINLESS STEEL
49	24		NSP SUPPORT ANGLE, INNER	ALUMINUM
48	2		SPACER WASHER	STAINLESS STEEL
47	16		SCREW, FLAT HD CAP SCREW 1/2-13UNC-2A X 1.0 LG	ASTM A320 GR L43
46	2		LOWER TRUNNION PLUG SHIELDING BLOCK	ASTM A240 TYPE 304
45	2		LOWER TRUNNION PLUG COVER PLATE	ASTM A564 GR 630
44	1		TAPERED PIN	ASTM A193 GR B7
43	2		TEST PORT, PLUG	ASME SA-479 TYPE 304
42	2		VENT/DRAIN PORT, PLUG	ASME SA-479 TYPE 304
41	4		TEST/VENT/DRAIN PORT, THREADED INSERT	ASME SA-479 TYPE 304
40	2		TEST PORT SEAL	METALLIC/ ELASTOMERIC
39	2		VENT/DRAIN PORT SEAL	METALLIC/ ELASTOMERIC
38	24		IMPACT LIMITER ATTACHMENT BLOCK	ASTM A240, TY. 304
37	4		O-RING, (2.00 ID (NOMINAL)) X .21 W	ELASTOMER OR METALLIC
36	2		VENT/DRAIN PORT SCREW, CAP HEX HD 3/4-10UNC-2A X 1 3/4" LG	ASTM A320 GR L43
35	2		TEST PORT SCREW, CAP HEX HD 3/4-10UNC-2A X 1 3/4" LG	ASTM A320 GR L43
34	8		SCREW, CAP HD SOC, 1-8UNC-2A 5.0 LG	ASTM A320 GR L43
33	12		HARDENED WASHER, 1.5 OD X.177 THK MAX	ASTM F436
32	38		HARDENED WASHER, 3.0 OD X.25 THK MAX	ASTM F436
31	4		TRUNNION BACK	ASTM A240 TYPE 304
30	12		SCREW, CAP HD SOC, 1-8UNC-2A 4.5 LG	ASME SA-320 GR L43
29	1		O-RING	METALLIC
28	1		O-RING	METALLIC/ELASTOMERIC
27	36		SCREW, CAP HD SOC, 2-12UN-2A X 8.16 LG	ASME SA-320 GR L43
26	1		O-RING, (71.48 ID)	METALLIC/ELASTOMERIC
25	1		O-RING, (69.84 ID)	METALLIC
24	1		TOP CLOSURE PLATE	ASME SA-240, TY. 304
23	1		RAM CLOSURE PLATE	ASME SA-240, TY. 304-19
22	A/R		CASTABLE NEUTRON SHIELDING MATERIAL	NS-3
21	2		RAILS, .120 THK X 4.0 WIDE	
20	2		UPPER TRUNNION PLUG BOTTOM PLATE	ASTM A240, TY. 304
19	A/R		NEUTRON SHIELD SHELL	ASTM A240 TYPE 304
18	12		PLUGS	ASTM A240, TY. 304
17	12		RUPTURE PLUG .036 (20 GA) THK	ASTM A240, TY. 304
16	24		NSP SUPPORT ANGLE, OUTER	ASTM A240 TYPE 304
15	1		NSP BOTTOM SUPPORT RING, PLATE	ASME SA-240 TYPE 304
14	2		NSP TOP SUPPORT RING, PLATE	ASME SA-240 TYPE 304
13	2		TIE BAR	ASME SA-240 TYPE 304-19
12	2		BEARING BLOCK	ASME SA-240 TYPE 304-19
11	1		PAD PLATE	ASME SA-240 TYPE 304-19
10	2		LOWER TRUNNION SLEEVE	ASME SA-182 TYPE F304-19
9	2		UPPER TRUNNION SLEEVE	ASME SA-182 TYPE F304-19
8	2		UPPER TRUNNION PLUG SIDE PLATE	ASTM A240, TY. 304
7	2		UPPER TRUNNION PLUG COVER PLATE	ASTM A240, TY. 304
6	A/R		GAMMA SHIELD	ASTM B29 LEAD
5	1		TOP FLANGE, MACHINED RING FORGING	ASME SA-182, TYPE F304H
4	1		TOP STRUCTURAL SHELL, ROLLED PLATE	ASME SA-240 TYPE 304-19
3	1		BOTTOM STRUCTURAL SHELL, ROLLED PLATE	ASME SA-240 TYPE 304
2	1		BOTTOM END CLOSURE, MACHINED FORGING	ASME SA-182, TY. F304H
1	1		INNER SHELL, ROLLED PLATE	ASME SA-240 TYPE 304 AND TYPE 304-19

PARTS LIST

ALL DIMENSIONS ARE APPLICABLE AT 68°F AND ALL TOLERANCING APPLIES AFTER WELDING AND FINAL MACHINING UNLESS NOTED OTHERWISE.

DIMENSIONS ARE IN INCHES AND DEGREES UNLESS NOTED OTHERWISE. DIMENSIONING AND TOLERANCING IN ACCORDANCE WITH ANSI Y14.5M-1982.

BREAK AND DEBURR ALL SHARP EDGES .02

3rd ANGLE PROJECTION

DO NOT SCALE DRAWING

VECTRA
Fuel Services - San Jose, California

SAFETY ANALYSIS REPORT
NUHOMS®-MP187
MULTI-PURPOSE CASK
MAIN ASSEMBLY

FILE NO.	DWG. NO.	SCALE	SHEET	REV. NO.
NUH005.4001	NUH-05-4001NP	NONE	1 OF 6	3

U.S. Patent No. 4,780,269
VECTRA Technologies, Inc.

REV	DESCRIPTION:	DRAWN:	DESIGN:	CHECK:	P.E.	E.M.	P.M.
	(SEE SHEET 1 FOR REVISIONS)						

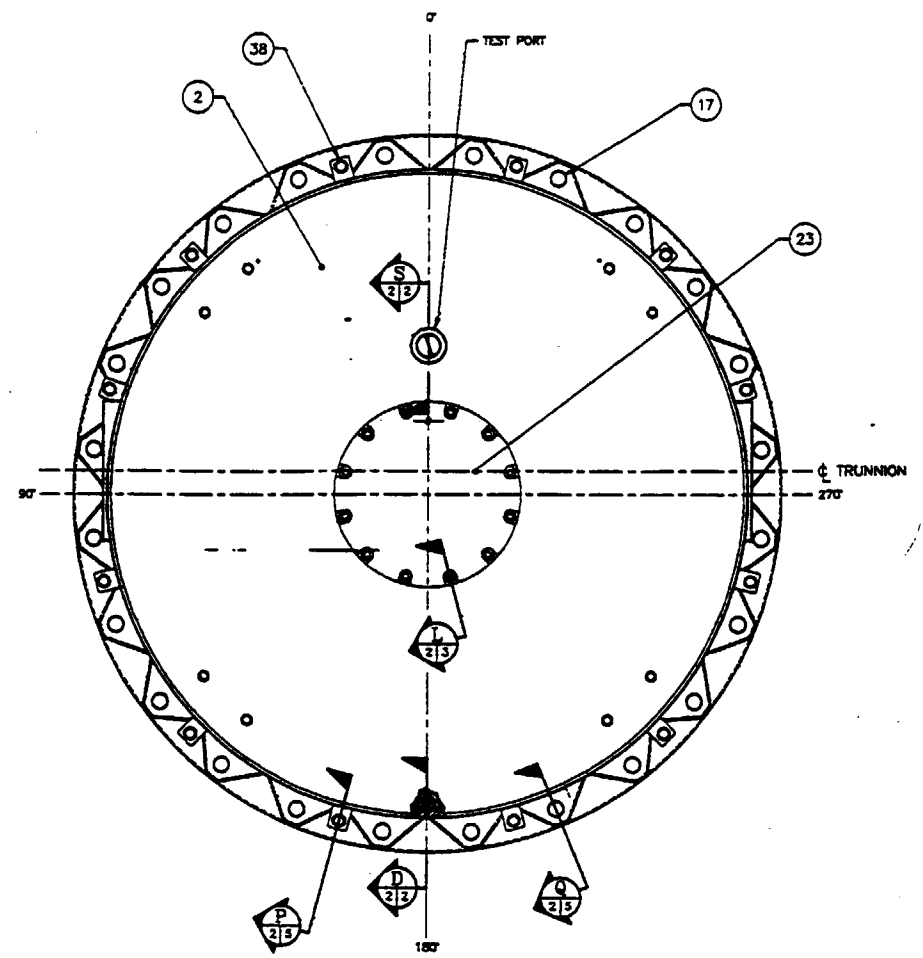

VIEW A 1|2
(UPPER TRUNNION SLEEVES NOT SHOWN FOR CLARITY)

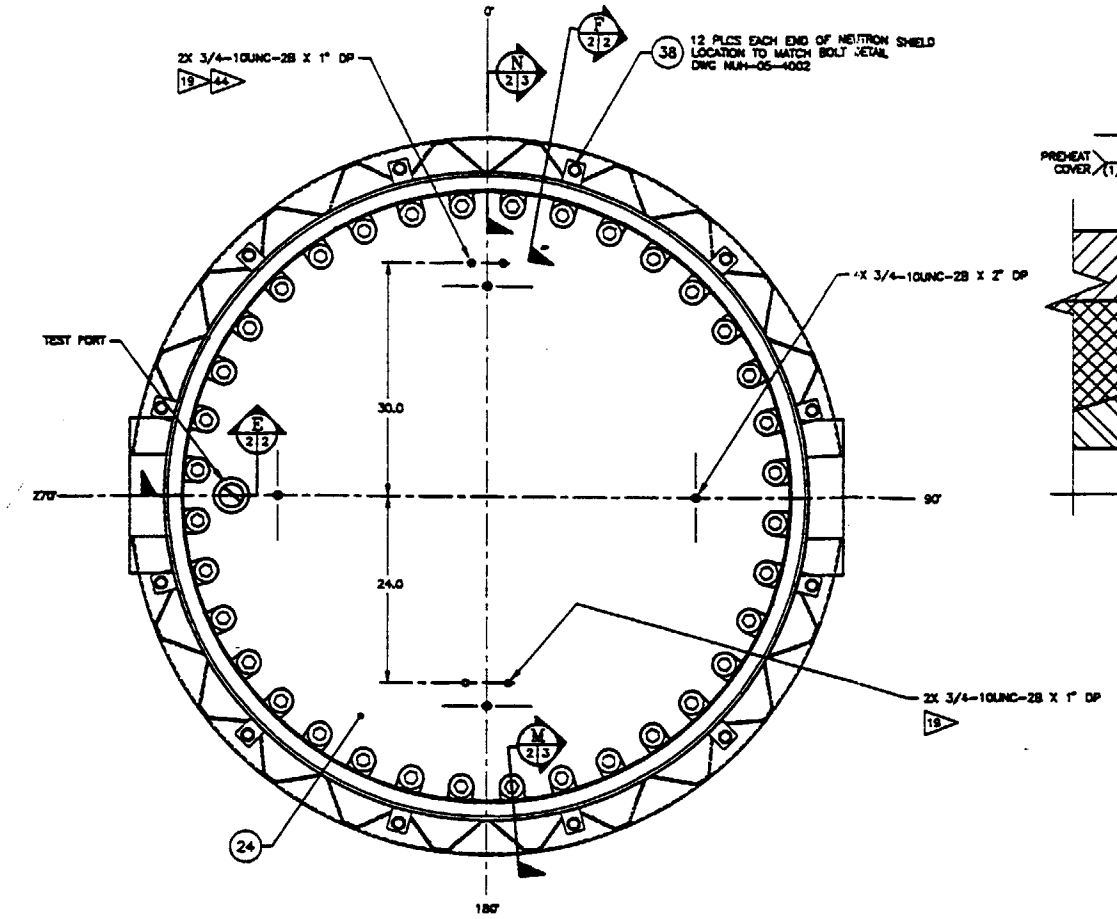

VIEW B 1|2

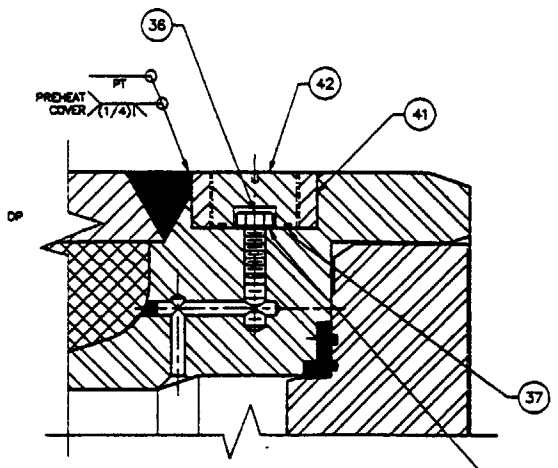

SECTION F 2|2
(VENT PORT)

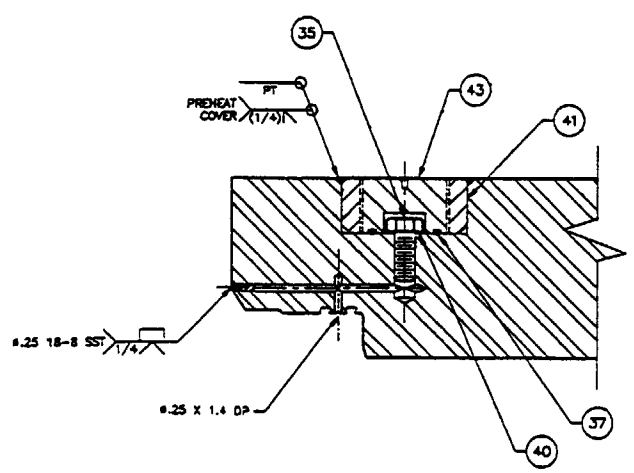

SECTION E 2|2
(TOP TEST PORT)

PROPRIETARY

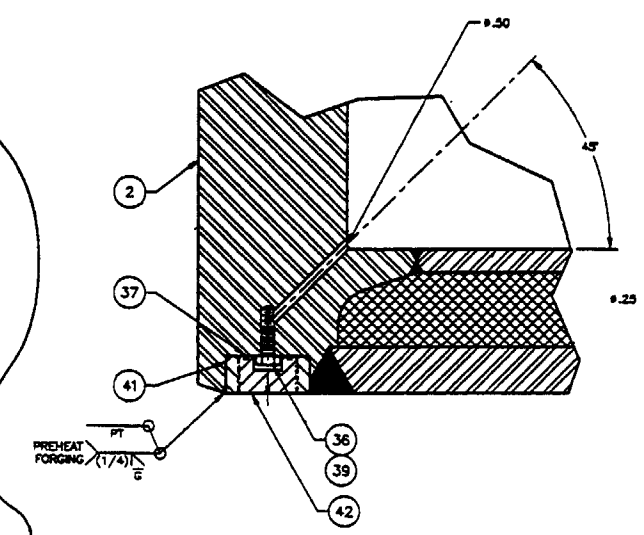

SECTION D 2|2
(180° AZIMUTH, DRAIN PORT INSTALLATION)

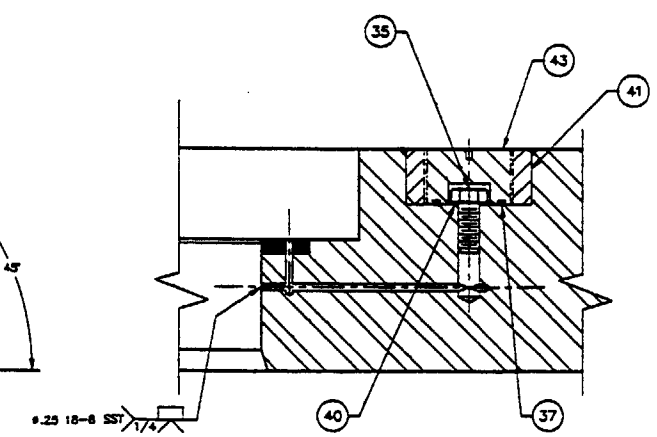

SECTION S 2|2
(RAM CLOSURE PLATE NOT SHOWN FOR CLARITY)

U.S. Patent No. 4,780,269
VECTRA Technologies, Inc.

ITEM NO.	QTY REQ'D	PART OR IDENTIFYING NO.	NOMENCLATURE OR DESCRIPTION	MATERIAL SPECIFICATION

PARTS LIST

ALL DIMENSIONS ARE APPLICABLE AT 68°F AND ALL TOLERANCING APPLIES AFTER WELDING AND FINAL MACHINING UNLESS NOTED OTHERWISE.

DIMENSIONS ARE IN INCHES AND DEGREES UNLESS NOTED OTHERWISE. DIMENSIONING AND TOLERANCING IN ACCORDANCE WITH ANSI Y14.5M-1982.

BREAK AND DEBURR ALL SHARP EDGES .02

3rd ANGLE PROJECTION

DO NOT SCALE DRAWING

VECTRA
Fuel Services – San Jose, California

TITLE: SAFETY ANALYSIS REPORT
NUHOMS®-MP187
MULTI-PURPOSE CASK
MAIN ASSEMBLY

FILE NO.	DWG. NO.	SCALE	SHEET	REV. NO.
NUH005.4001	NUH-05-4001NP	NONE	2 OF 6	3

REV	DESCRIPTION:	DRAWN:	DESIGN:	CHECK:	P.E.	E.M.	P.M.
	(SEE SHEET 1 FOR REVISIONS)						

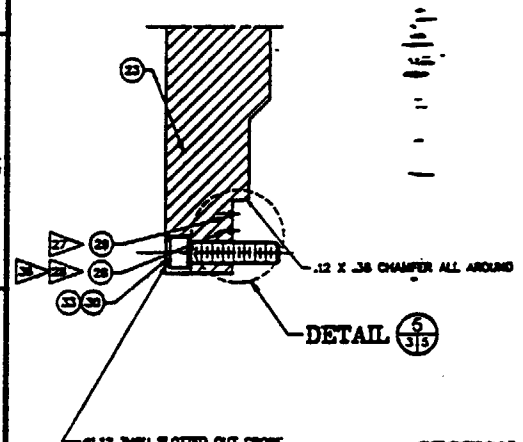

SECTION 1/2|3
RAM CLOSURE PLATE

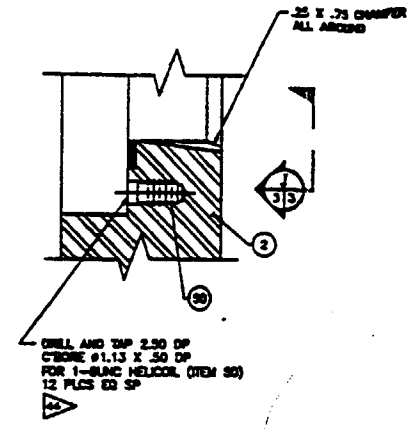

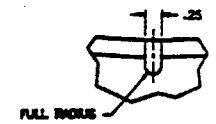

VIEW J/3|3
(AT AZIMUTH 180° ONLY)

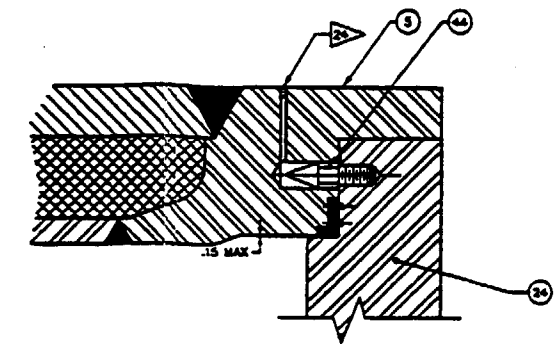

SECTION N/2|3
(AT AZIMUTH 0° ONLY)

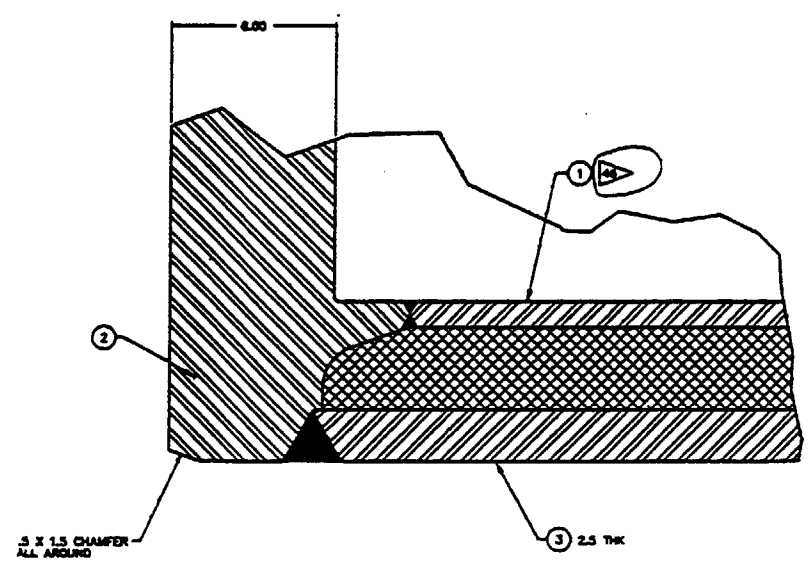

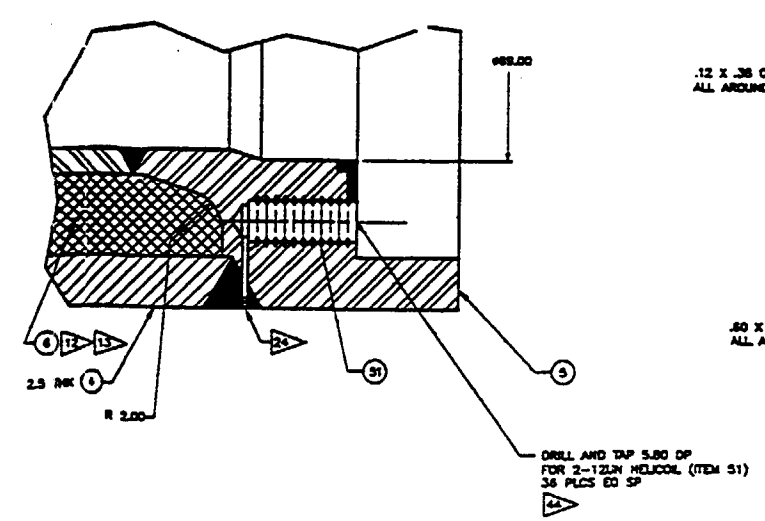

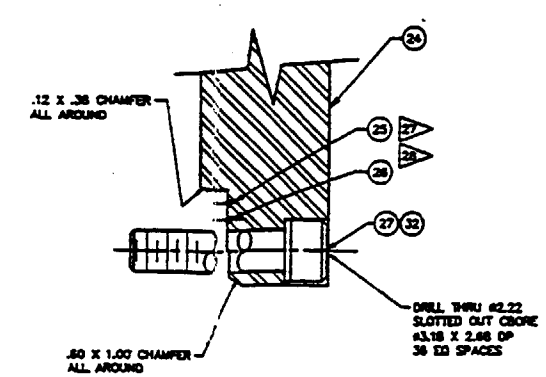

SECTION M/2|3

U.S. Patent No. 4,780,269
VECTRA Technologies, Inc.

ITEM NO.	QTY REQ'D	PART OR IDENTIFYING NO.	NOMENCLATURE OR DESCRIPTION	MATERIAL SPECIFICATION

PARTS LIST

ALL DIMENSIONS ARE APPLICABLE AT REF AND ALL TOLERANCING APPLIES AFTER WELDING AND FINAL MACHINING UNLESS NOTED OTHERWISE.

DIMENSIONS ARE IN INCHES AND DEGREES UNLESS NOTED OTHERWISE. DIMENSIONING AND TOLERANCING IN ACCORDANCE WITH ANSI Y14.5M-1982.

BREAK AND DEBURR ALL SHARP EDGES .02

3rd ANGLE PROJECTION

DO NOT SCALE DRAWING

VECTRA
Fuel Services – San Jose, California

SAFETY ANALYSIS REPORT
NUHOMS®-MP187
MULTI-PURPOSE CASK
MAIN ASSEMBLY

FILE NO.	DWG NO.	SCALE	SHEET	REV. NO.
NUH005.4001	NUH-05-4001NP	NONE	3 OF 6	3

E (34 X 44)

REV	DESCRIPTION:	DRAWN	DESIGN	CHECK	P.E.	E.M.	P.M.
	(SEE SHEET 1 FOR REVISIONS)						

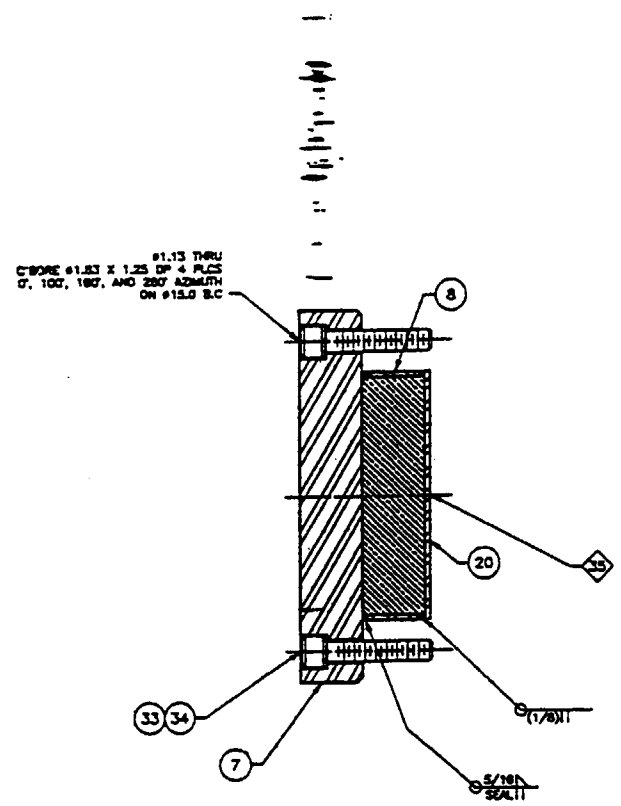

SECTION C 1/4
UPPER TRUNNION PLUG ASSEMBLY

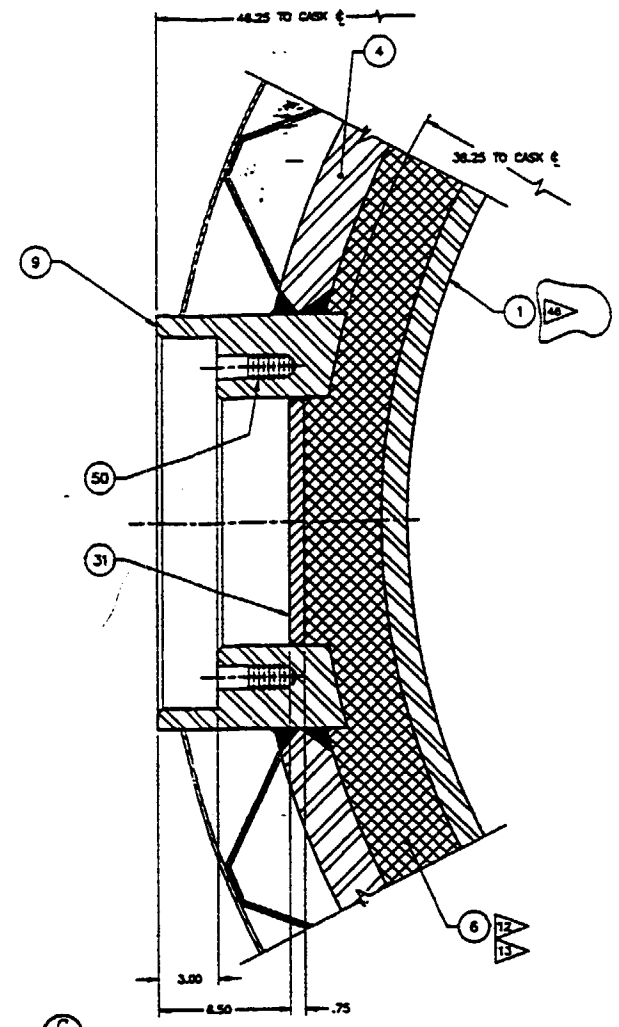

SECTION C 1/4
UPPER TRUNNION PLUG ASSEMBLY

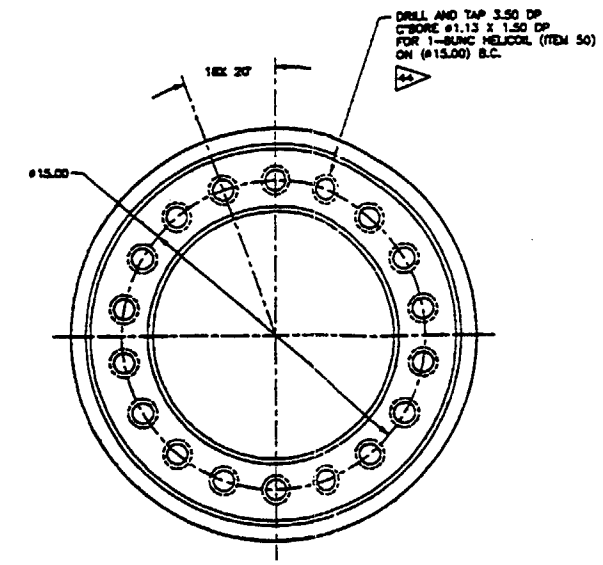

ITEM 9
UPPER TRUNNION SLEEVE

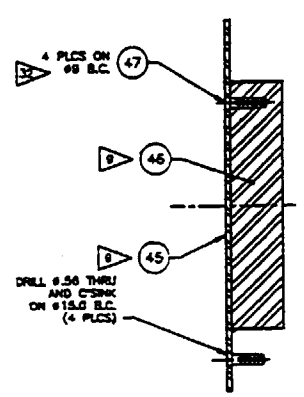

SECTION R 1/4
LOWER TRUNNION PLUG ASSEMBLY

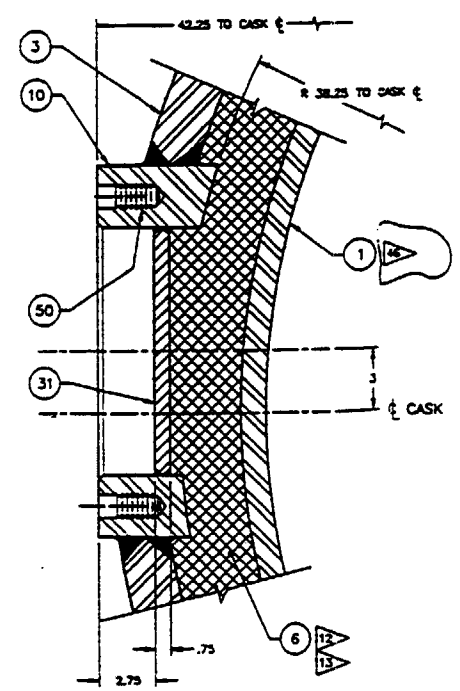

SECTION R 1/4
LOWER TRUNNION PLUG ASSEMBLY

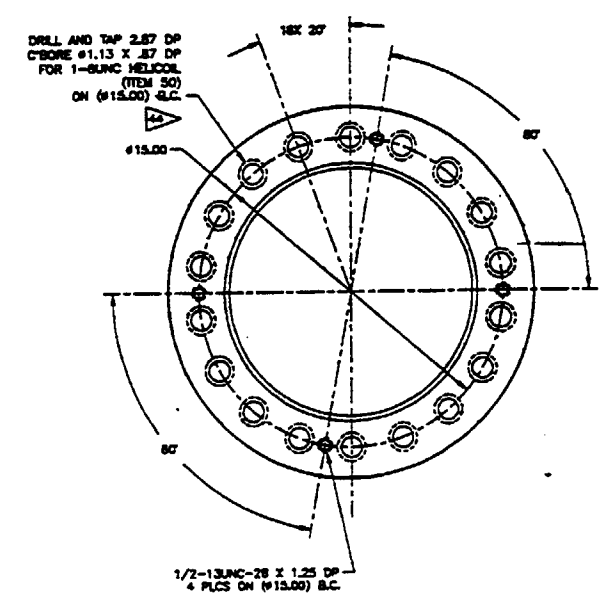

ITEM 10
LOWER TRUNNION SLEEVE

U.S. Patent No. 4,780,239
VECTRA Technologies, Inc.

ITEM NO.	QTY REQ'D	PART OR IDENTIFYING NO.	NOMENCLATURE OR DESCRIPTION	MATERIAL SPECIFICATION

PARTS LIST

ALL DIMENSIONS ARE APPLICABLE AT 68°F AND ALL TOLERANCING APPLIES AFTER WELDING AND FINAL MACHINING UNLESS NOTED OTHERWISE.

DIMENSIONS ARE IN INCHES AND DEGREES UNLESS NOTED OTHERWISE. DIMENSIONING AND TOLERANCING IN ACCORDANCE WITH ANSI Y14.5M-1982.

BREAK AND DEBURR ALL SHARP EDGES .02

3rd ANGLE PROJECTION

DO NOT SCALE DRAWING

VECTRA
Fuel Services – San Jose, California

TITLE: SAFETY ANALYSIS REPORT
NUHOMS®-MP187
MULTI-PURPOSE CASK
MAIN ASSEMBLY

FILE NO.	DWG NO.	SCALE	SHEET	REV NO.
NUH005.4001	NUH-05-4001NP	NONE	4 OF 6	3

REV	DESCRIPTION:	DRAWN:	DESIGN:	CHECK:	P.E.	E.M.	P.M.
	(SEE SHEET 1 FOR REVISIONS)						

PROPRIETARY

PROPRIETARY

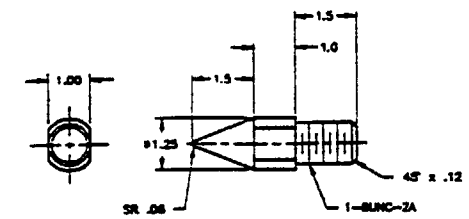

ITEM 44
TAPERED PIN

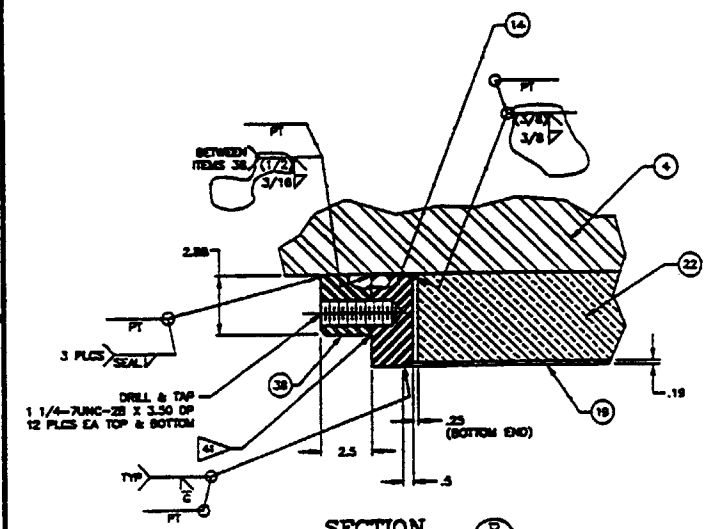

SECTION P 2|5

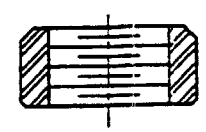

ITEM 41
THREADED INSERT

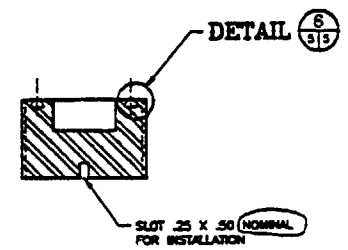

ITEM 43
ITEM 42
PLUG

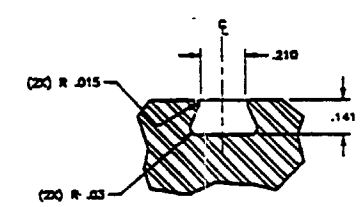

DETAIL 6 3|3

PROPRIETARY

PROPRIETARY

ITEM NO.	QTY (REQ'D)	PART OR IDENTIFYING NO.	NOMENCLATURE OR DESCRIPTION	MATERIAL SPECIFICATION

PARTS LIST

ALL DIMENSIONS ARE APPLICABLE AT 68°F AND ALL TOLERANCING APPLIES AFTER WELDING AND FINAL MACHINING UNLESS NOTED OTHERWISE.

DIMENSIONS ARE IN INCHES AND DEGREES UNLESS NOTED OTHERWISE. DIMENSIONING AND TOLERANCING IN ACCORDANCE WITH ANSI Y14.5M-1982.

BREAK AND DEBURR ALL SHARP EDGES .02

3rd ANGLE PROJECTION

DO NOT SCALE DRAWING

VECTRA
Fuel Services – San Jose, California

TITLE: SAFETY ANALYSIS REPORT
NUHOMS®-MP187
MULTI-PURPOSE CASK
MAIN ASSEMBLY

FILE NO.	DWG NO.	SCALE	SHEET	REV. NO.
NUH005.4001	NUH-05-4001NP	NONE	5 OF 6	3

U.S. Patent No. 4,780,269
VECTRA Technologies, Inc.

(SEE SHEET 1 FOR REVISIONS)

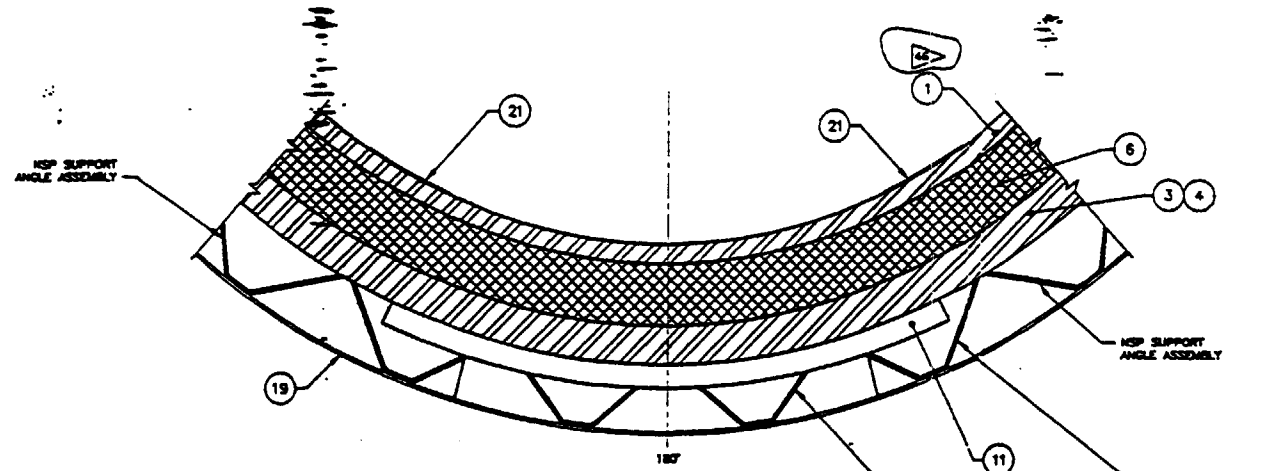

SECTION G 1|6
(ITEM 22 NOT SHOWN FOR CLARITY)

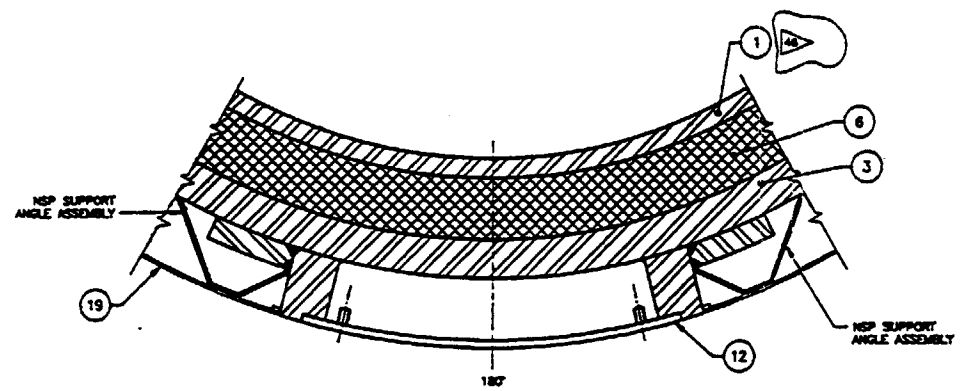

SECTION H 1|6
(ITEM 22 NOT SHOWN FOR CLARITY)

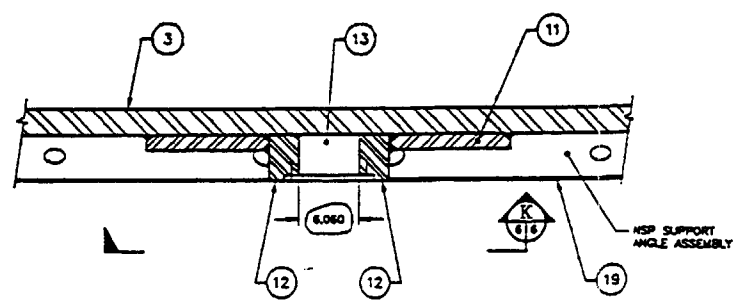

DETAIL 3 1|6

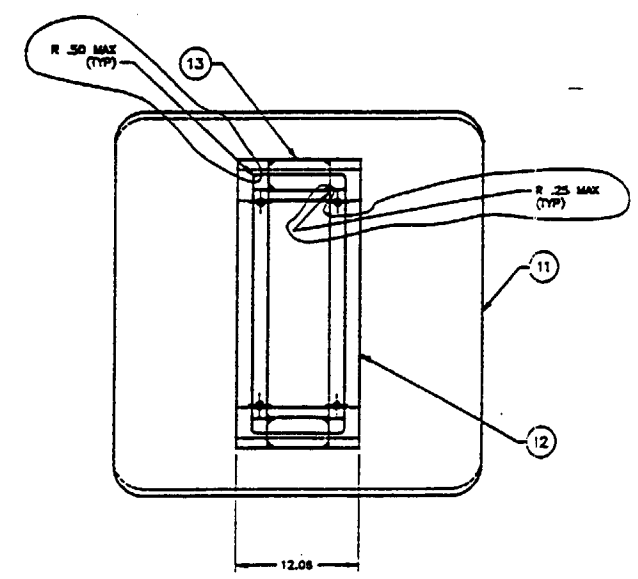

VIEW K 6|6

ITEM NO.	QTY REQ'D	PART OR IDENTIFYING NO.	NOMENCLATURE OR DESCRIPTION	MATERIAL SPECIFICATION

PARTS LIST

ALL DIMENSIONS ARE APPLICABLE AT 68°F AND ALL TOLERANCING APPLIES AFTER WELDING AND FINAL MACHINING UNLESS NOTED OTHERWISE.

DIMENSIONS ARE IN INCHES AND DEGREES UNLESS NOTED OTHERWISE. DIMENSIONING AND TOLERANCING IN ACCORDANCE WITH ANSI Y14.5M-1982.

BREAK AND DEBURR ALL SHARP EDGES .02

3rd ANGLE PROJECTION

DO NOT SCALE DRAWING

VECTRA
Fuel Services – San Jose, California

SAFETY ANALYSIS REPORT
NUHOMS®-MP187
MULTI-PURPOSE CASK
MAIN ASSEMBLY

FILE NO.	DWG. NO.	SCALE	SHEET	REV. NO.
NUH005.4001	NUH-05-4001NP	NONE	6 OF 6	3

U.S. Patent No. 4,780,269
VECTRA Technologies, Inc.

C (34 X 44)

REV	DESCRIPTION:	DRAWN:	DESIGN:	CHECK:	P.E.	E.M.	P.M.
0	INITIAL ISSUE	MRR 9/17/93	CJT 10/8/93	DM 10/8/93	RDQ 10/8/93	RDQ 10/8/93	MT 10/8/93
1	REVISED IN RESPONSE TO FIRST ROUND NRC QUESTIONS	RGP 12/24/95	/ /	/ /	/ /	/ /	/ /

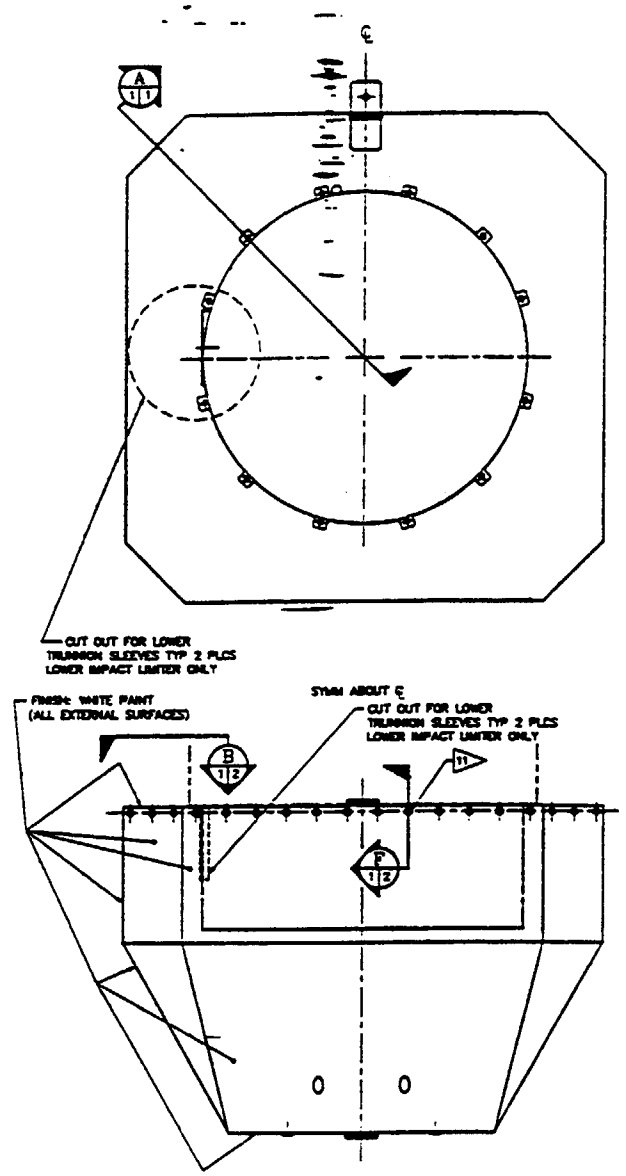

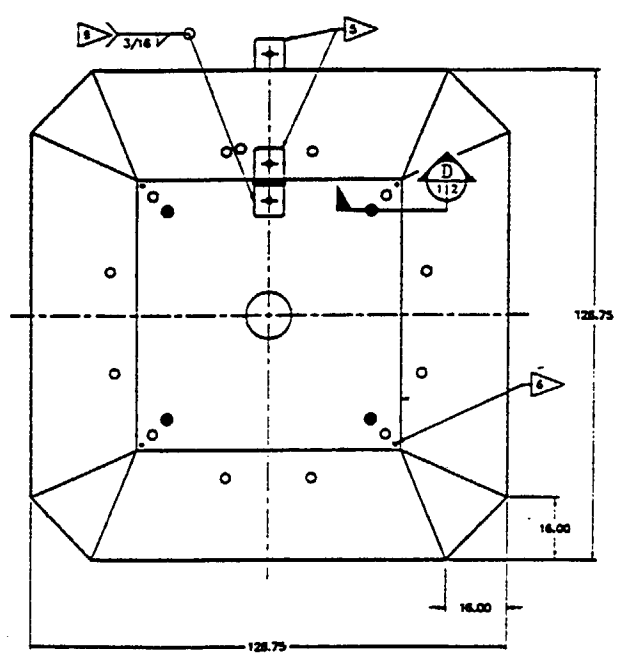

IMPACT LIMITERS

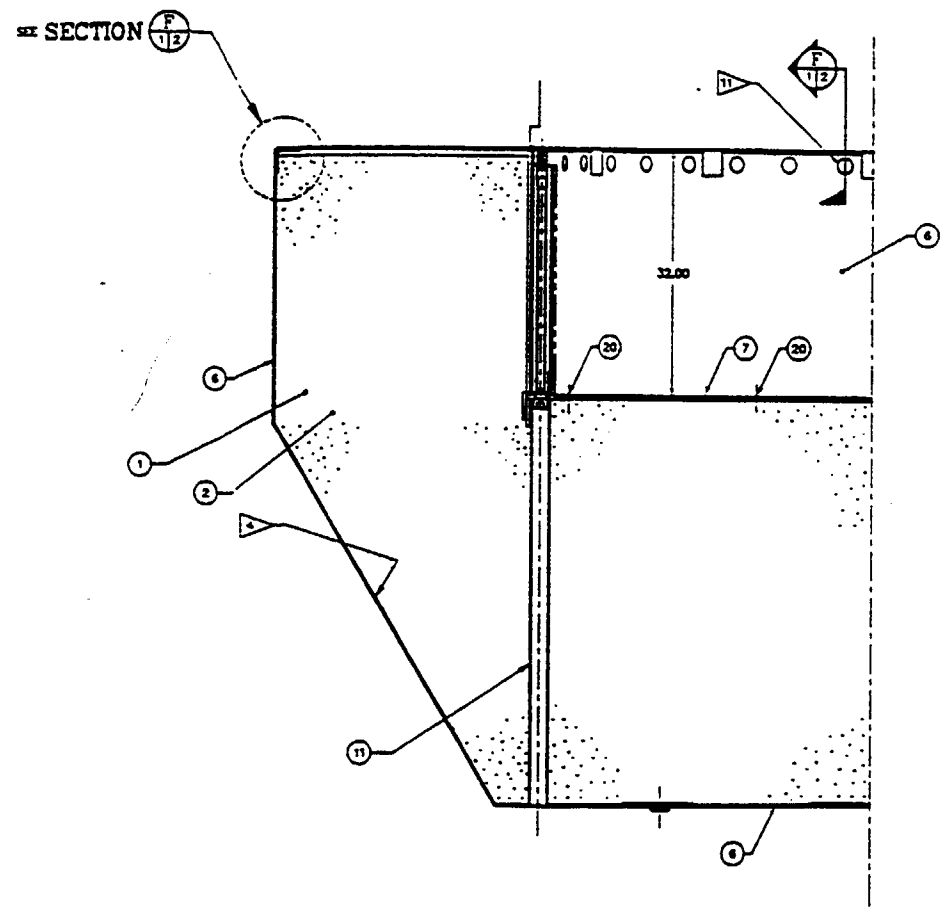

SECTION A 1 1

NOTES:

1. ALL WELDING PROCEDURES AND PERSONNEL SHALL BE QUALIFIED IN ACCORDANCE WITH ASME CODE, SECTION IX OR AWS D1.1. WELD PROCEDURES AND WELDER QUALIFICATIONS SHALL BE AVAILABLE FOR AUDIT OR REVIEW.
2. ALL WELDS SHALL BE VISUALLY EXAMINED IN ACCORDANCE WITH SECTION 8.15.1. AWS D1.1. VISUAL WELD INSPECTORS SHALL BE QUALIFIED PER AWS D1.1.
3. POLYURETHANE FOAM SHALL HAVE A NOMINAL DENSITY OF 15 LB/FT. INSTALLATION TECHNIQUES, ACCEPTANCE TESTS AND ACCEPTABLE DEVIATIONS IN PROPERTIES ARE SUMMARIZED IN SECTION 8 OF THE NUHOMS MP187 SAFETY ANALYSIS REPORT.
4. (PROPRIETARY).
5. IMPACT LIMITER LIFTING LUGS SHALL BE LOAD TESTED TO 125% OF MAXIMUM WORKING LOAD.
6. (PROPRIETARY).
7. (PROPRIETARY).
8. CHAMFER AT END OF ITEM 10 MAY BE FLARED OR CORNERS CUT AND BENT. ALL GAPS SHALL BE SEAL WELDED TO PREVENT MOISTURE ENTERING INTERIOR OF IMPACT LIMITER SHELL.
9. SEAL WELD TOP OF HINGE & PLATE AREA WHERE FILLET WELD CANNOT BE FORMED.
10. GRIND WASHER TO CLEAR IMPACT LIMITER SHELL.
11. (PROPRIETARY).
12. (PROPRIETARY).
13. QUANTITIES SHOWN ARE PER IMPACT LIMITER. TWO IMPACT LIMITERS ARE REQUIRED (UPPER & LOWER). ALL SECTIONS AND DETAILS ARE TYPICAL FOR BOTH IMPACT LIMITERS UNLESS OTHERWISE NOTED.
14. (PROPRIETARY).

13

ITEM NO.	QTY	PART OR IDENTIFYING NO.	NOMENCLATURE OR DESCRIPTION	MATERIAL SPECIFICATION
20	2		1/4 X 1/4 STRIP	ASTM A240 TYPE 304
19	4		1 1/2-8UNC-2A PIPE PLUG	PLASTIC
18	4		1 1/2-8UNC-2B STD HEAVY FLAT FLANGE	ASTM A240 TYPE 304
17	12		BOLT LOCATOR PLATE, 16 GA	ASTM A240 TYPE 304
16	4		FLAT WASHER, #5/8	STAINLESS STEEL
15	2		HEX NUT, 5/8-11UNC-2B	STAINLESS STEEL
14	2		5/8-11UNC-2A SOC HD BOLT X 7.5 LG	STAINLESS STEEL
13	6		ROUND MECHANICAL TUBING #1" X .095 WALL	300 SERIES STAINLESS STEEL
12	4		HINGE PLATE	ASTM A240 TYPE 304
11	12		ROUND TUBE #2" X .08 WALL	300 SERIES STAINLESS STEEL
10	12		GUIDE, PLATE, .25 THK	ASTM A240 TYPE 304
9	A/R		ANGLE, .31 THK	ASTM A240 TYPE 304
8	1		RING PLATE, .50 THK	ASTM A240 TYPE 304
7	A/R		SHELL PLATE, .50 THK	ASTM A240 TYPE 304
6	A/R		SHELL PLATE, .25 THK	ASTM A240 TYPE 304
5	4		CORNER PLATE, .31 THK	ASTM A240 TYPE 304
4	A/R		WAX	
3	12		SOCKET HD BOLT BLANK	ASTM A320, L43
2	A/R	GENERAL PLASTICS FR-3700 SERIES	CLOSED CELL FOAM, 15PCF	POLYURETHANE
1	1		LAMINATED HONEYCOMB ASSEMBLY	ALUMINUM

PARTS LIST

ALL DIMENSIONS ARE APPLICABLE AT 68°F AND ALL TOLERANCING APPLIES AFTER WELDING AND FINAL MACHINING UNLESS NOTED OTHERWISE.

DIMENSIONS ARE IN INCHES AND DEGREES UNLESS NOTED OTHERWISE. DIMENSIONING AND TOLERANCING IN ACCORDANCE WITH Y14.5M-1982.

BREAK AND DEBURR ALL SHARP EDGES .02

3rd ANGLE PROJECTION

DO NOT SCALE DRAWING

VECTRA
Fuel Services - San Jose, California

TITLE: SAFETY ANALYSIS REPORT
NUHOMS® MP187
MULTI-PURPOSE CASK
IMPACT LIMITERS

FILE NO.	DWG. NO.	SCALE	SHEET	REV. NO.
NUH005.4002	NUH-05-4002NR	NONE	1 OF 2	1

Patents Pending and
U.S. Patent No. 4,780,269
VECTRA Technologies, Inc.

REV	DESCRIPTION:	DRAWN:	DESIGN:	CHECK:	F.E.	E.M.	P.M.
	(SEE SHEET 1 FOR REVISIONS)						

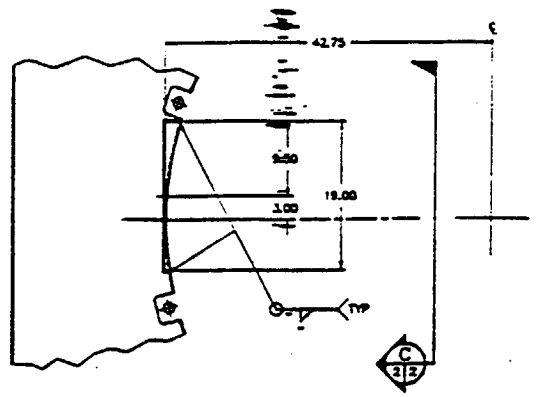

PARTIAL VIEW (B 1/2)

CUTOUT FOR LOWER TRUNNION SLEEVE, CASK OMITTED
LOWER IMPACT LIMITER ONLY

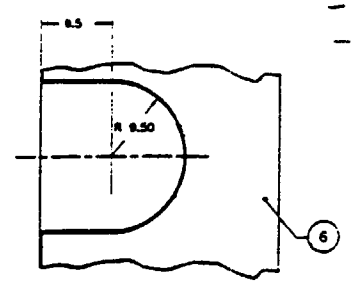

VIEW (C 2/2)

LOWER IMPACT LIMITER ONLY

PROPRIETARY

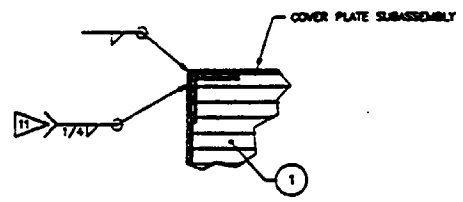

SECTION (F 1/2)

TOP CLOSURE WELD

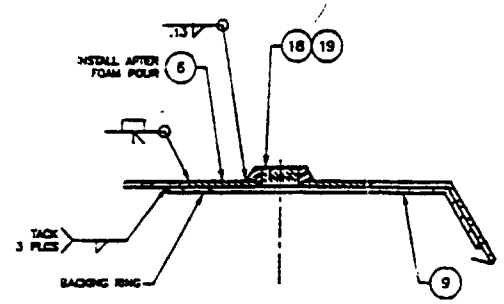

SECTION (D 1/2)

(VENT HOLES TYP 4 PLCS)
CENTER POUR HOLE SIMILAR
EXCEPT DELETE ITEMS 18 & 19

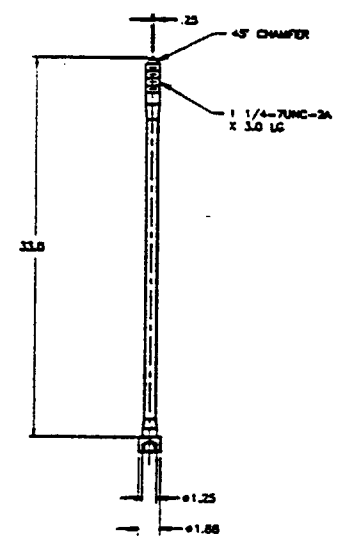

ATTACHMENT BOLT

PROPRIETARY

PROPRIETARY

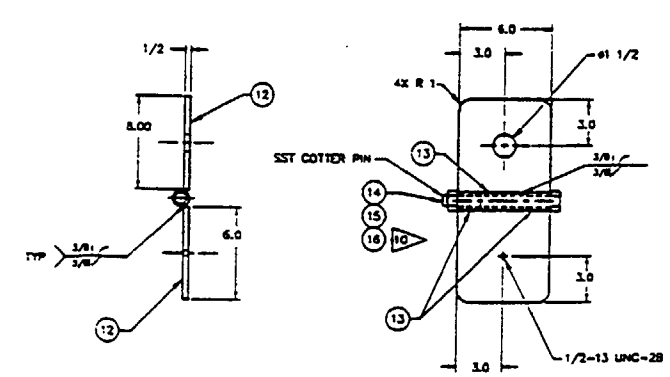

PIVOT LIFT HINGE ASSEMBLY

ITEM NO.	QTY	PART OR IDENTIFYING NO.	NOMENCLATURE OR DESCRIPTION	MATERIAL SPECIFICATION

PARTS LIST

ALL DIMENSIONS ARE APPLICABLE AT SET AND ALL TOLERANCING APPLIES AFTER WELDING AND FINAL MACHINING UNLESS NOTED OTHERWISE.

DIMENSIONS ARE IN INCHES AND DEGREES UNLESS NOTED OTHERWISE. DIMENSIONING AND TOLERANCING IN ACCORDANCE WITH Y14.5M-1982.

BREAK AND DEBURR ALL SHARP EDGES .22

3rd ANGLE PROJECTION

DO NOT SCALE DRAWING

VECTRA
Fuel Services - San Jose, California

SIZE: SAFETY ANALYSIS REPORT
NUHOMS-MP187
MULTI-PURPOSE CASK
IMPACT LIMITERS

FILE NO.	DWG. NO.	SCALE	SHEET	REV. NO.
NUH005.4002	NUH-05-4002NR	NONE	2 OF 2	1

Patents Pending and
U.S. Patent No. 4,780,269
VECTRA Technologies, Inc.

REV	DESCRIPTION	DRAWN	DESIGN	CHECK	P.E.	E.M.	P.M.
0	INITIAL ISSUE	RRB 10/2/93	KJT 10/8/93	IIDM 10/8/93	IRDQ 10/8/93	IRDQ 10/8/93	IMT 10/8/93
*	REVISED IN RESPONSE TO FIRST ROUND NRC QUESTIONS	RGP 12/22/95	/ /	/ /	/ /	/ /	/ /

NOTES:

1. ALL WELDING SHALL BE PERFORMED BY WELDERS AND WELDING OPERATORS QUALIFIED IN ACCORDANCE WITH AWS D1.1 (OR ASME SECTION IX). ALL WELDS SHALL BE VISUALLY INSPECTED PER AWS D1.1 SECTION 8.15.1.
2. ADJUST DIMENSIONS AS NECESSARY TO PROVIDE A FREE SLIDING FIT WITHIN THE SHEAR KEY ASSEMBLY.

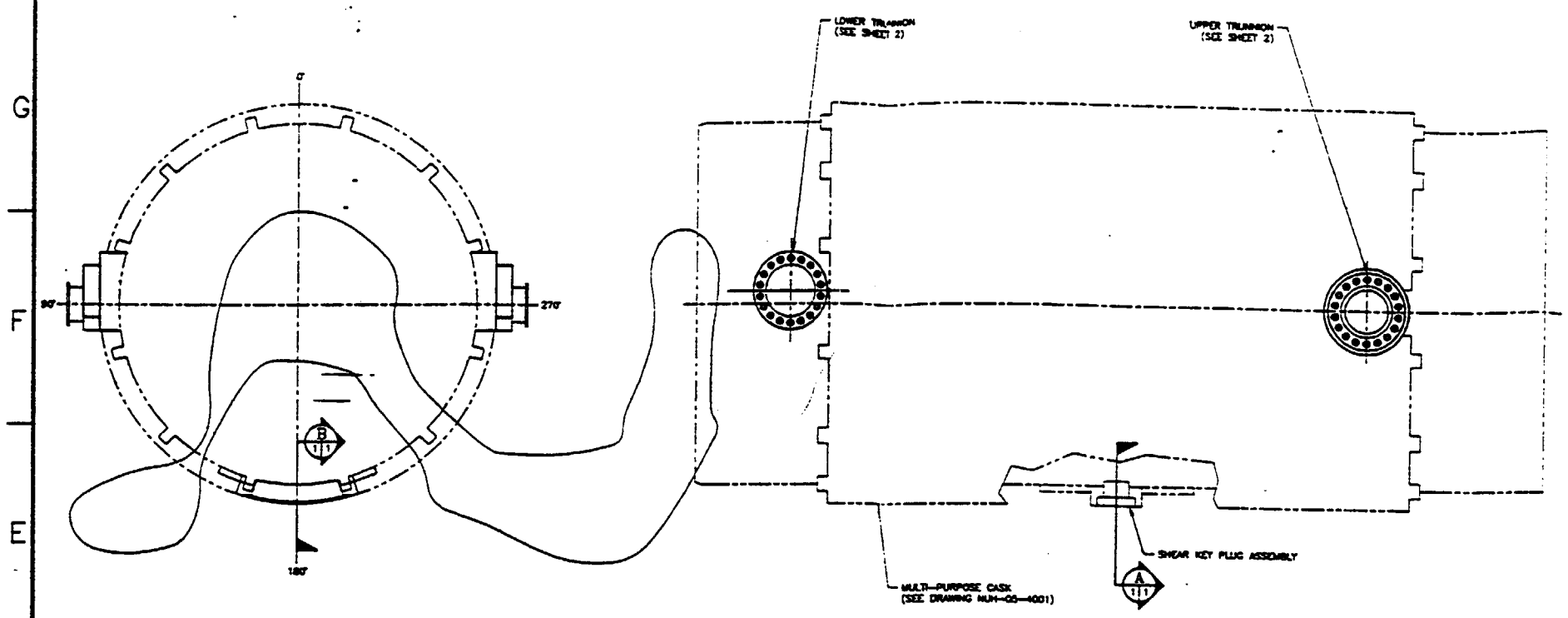

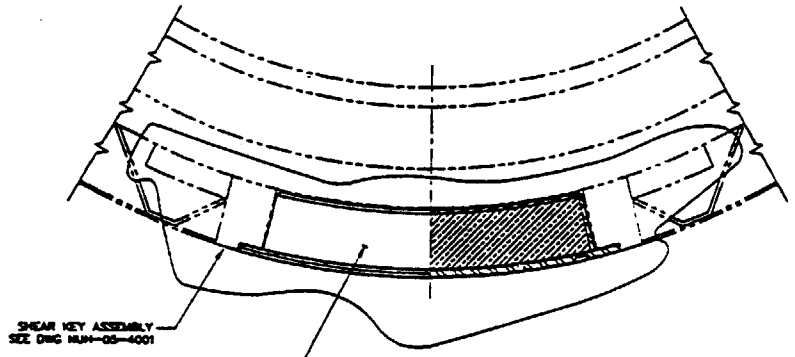

SECTION A 1/1

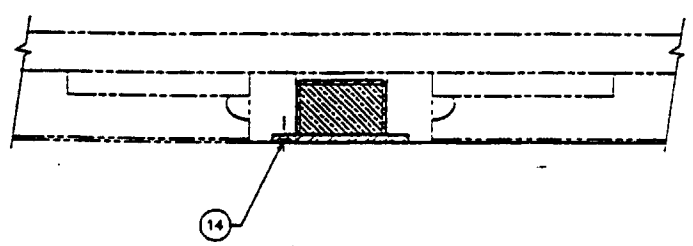

SECTION B 1/1

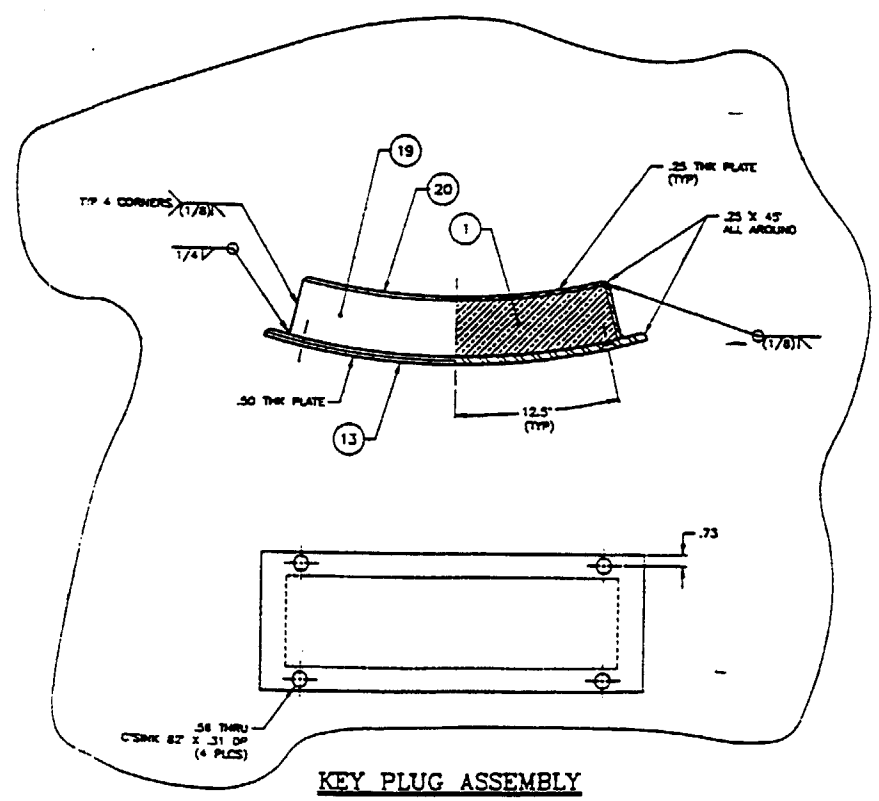

KEY PLUG ASSEMBLY

ITEM NO.	QTY	REQ'D	PART OR IDENTIFYING NO.	NOMENCLATURE OR DESCRIPTION	* MATERIAL SPECIFICATION
21	72			HARDENED WASHER, 1.5 OD X .177 THK	ASTM F436
20	1			KEY PLUG BOTTOM PLATE	ASTM A240 TYPE 304
19	4			KEY PLUG SIDE PLATE	ASTM A240 TYPE 304
18	2			TRUNNION BACK (1/4") THK PLATE	ASTM A240 TYPE 304
17	2			UPPER TRUNNION	ASME SA-182 OR F XM-19
16	2			LOWER TRUNNION	ASTM A182 OR F XM-19
15	72			SCREW, SOCKET HEAD CAP 1-8UNC-2A X 5.13 LG	ASTM A320 OR L43
14	4			FLAT HD CAP SCREW 1/2-13UNC-2A X 1.00 LG	ASTM A320 OR L43
13	1			KEY PLUG COVER PLATE	ASTM A240 TYPE 304
1	A/R		NS-3	CASTABLE NEUTRON SHIELDING MATERIAL	

PARTS LIST

ALL DIMENSIONS ARE APPLICABLE AT 68°F AND ALL TOLERANCING APPLIES AFTER WELDING AND FINAL MACHINING UNLESS NOTED OTHERWISE.

DIMENSIONS ARE IN INCHES AND DEGREES UNLESS NOTED OTHERWISE. DIMENSIONING AND TOLERANCING IN ACCORDANCE WITH Y14.5M-1982.

BREAK AND DEBURR ALL SHARP EDGES .02

3rd ANGLE PROJECTION

DO NOT SCALE DRAWING

VECTRA
Fuel Services - San Jose, California

SAFETY ANALYSIS REPORT
NUHOMS®-MP187
MULTI-PURPOSE CASK
ON-SITE TRANSFER ARRANGEMENT

FILE NO.	DWG. NO.	SCALE	SHEET	REV. NO.
NUH005.4003	NUH-05-4003NP	NONE	1 OF 2	1

Patents Pending and
U.S. Patent No. 4,780,269
VECTRA Technologies, Inc.

REV	DESCRIPTION:	DRAWN:	DESIGN:	CHECK:	P.E.	E.M.	P.M.
	(SEE SHEET 1 FOR REVISIONS)						

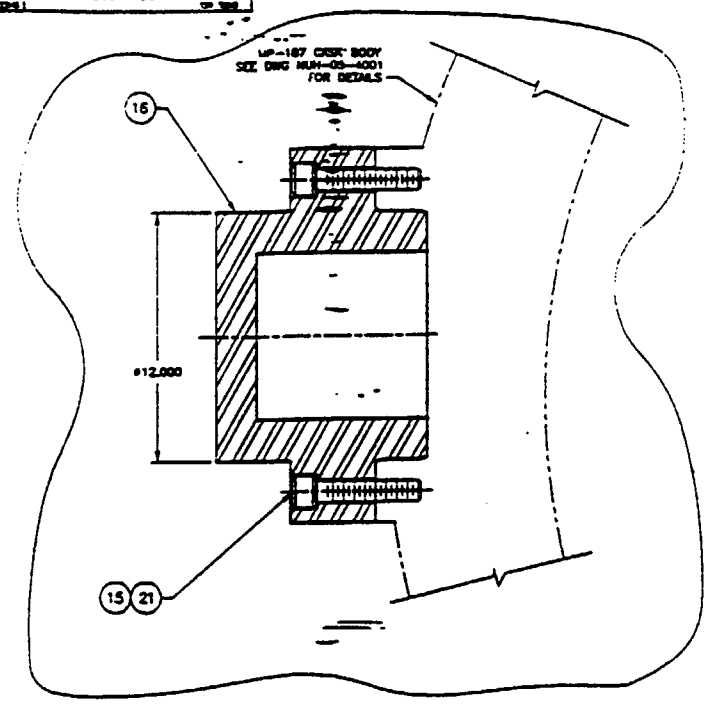

LOWER TRUNNION

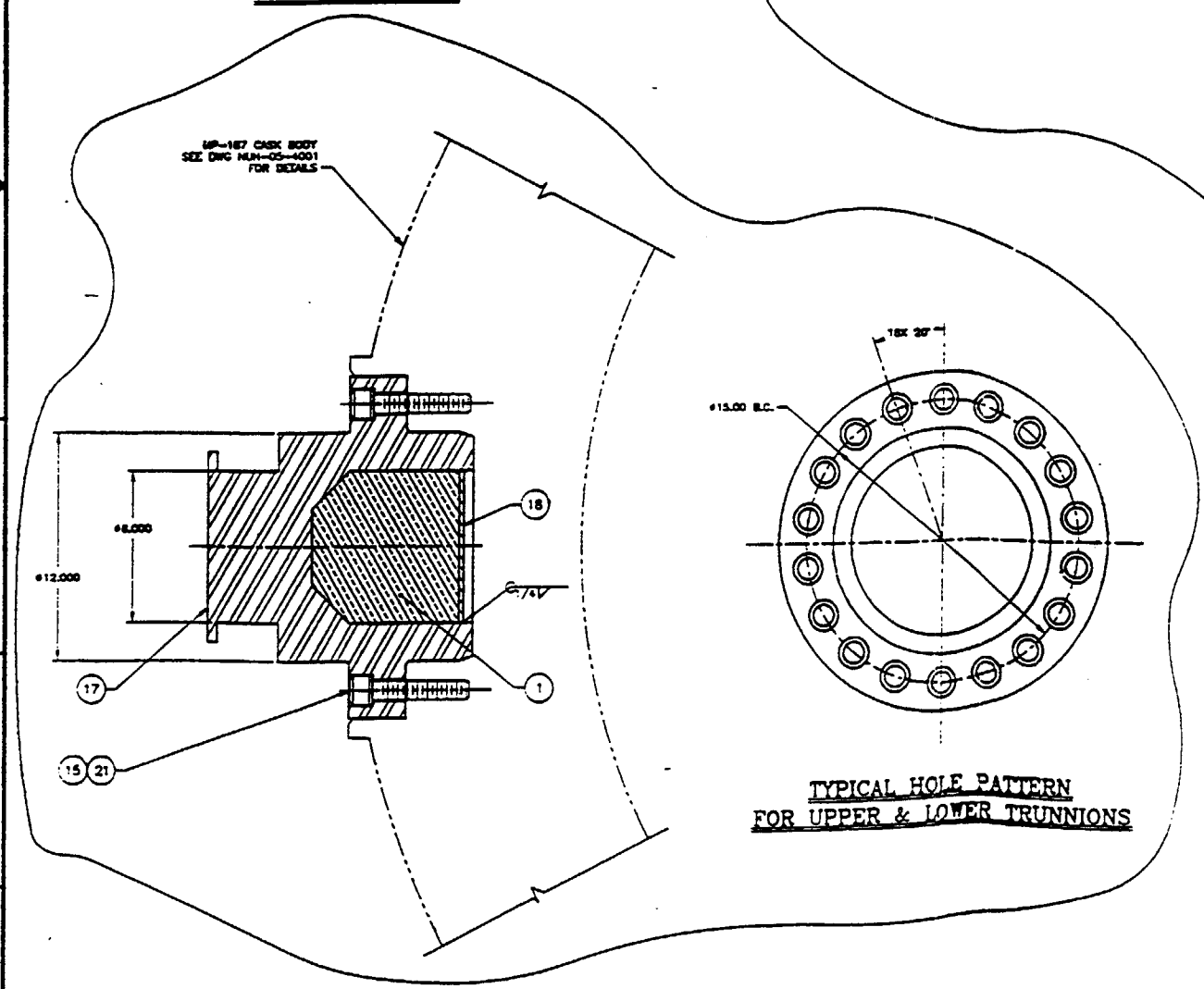

TYPICAL HOLE PATTERN
FOR UPPER & LOWER TRUNNIONS

UPPER TRUNNION

ITEM NO.	QTY REQD	PART OR IDENTIFYING NO.	NOMENCLATURE OR DESCRIPTION	MATERIAL SPECIFICATION

PARTS LIST

ALL DIMENSIONS ARE APPLICABLE AT 68°F AND ALL FOLLOWING APPLIES AFTER WELDING AND FINAL MACHINING UNLESS NOTED OTHERWISE.

DIMENSIONS ARE IN INCHES AND DEGREES UNLESS NOTED OTHERWISE. DIMENSIONING AND TOLERANCING IN ACCORDANCE WITH Y14.5M-1982.

BREAK AND DEBURR ALL SHARP EDGES

3rd ANGLE PROJECTION

DO NOT SCALE DRAWING

VECTRA
Fuel Services - San Jose, California

TITLE: SAFETY ANALYSIS REPORT
NUHOMS® MP187
MULTI-PURPOSE CASK
ON-SITE TRANSFER ARRANGEMENT

FILE NO.	DWG NO.	SCALE	SHEET	REV. NO.
NUH003.4003	NUH-05-4003	NONE	2 OF 21	1

Patents Pending and
U.S. Patent No. 4,780,269
VECTRA Technologies, Inc.

REV	DESCRIPTION:	DRAWN:	DESIGN:	CHECK:	P.E.	E.M.	Q.A	P.M.
0	INITIAL ISSUE	CJW 3/1/95	CJT 2/28/95	TDM 2/28/95	TDM 2/28/95	EDT 5/25/95	N/A	MT 5/25/95
1	REVISE PER NRC COMMENTS	CJW 2/29/96						/ /

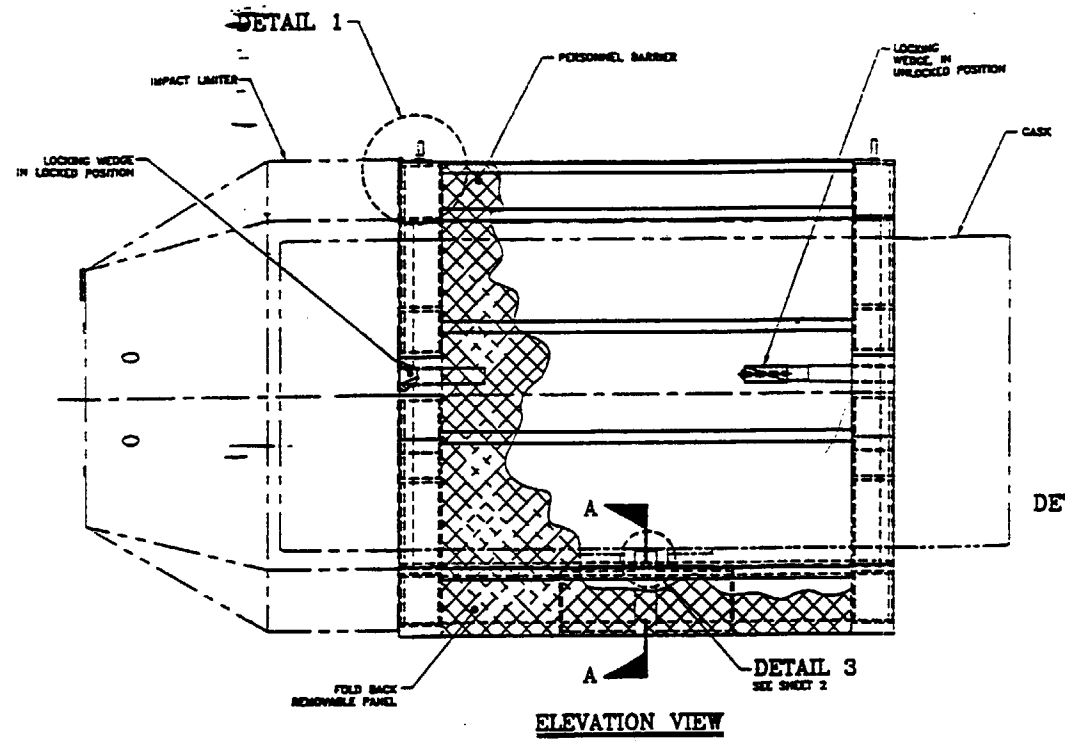

ELEVATION VIEW

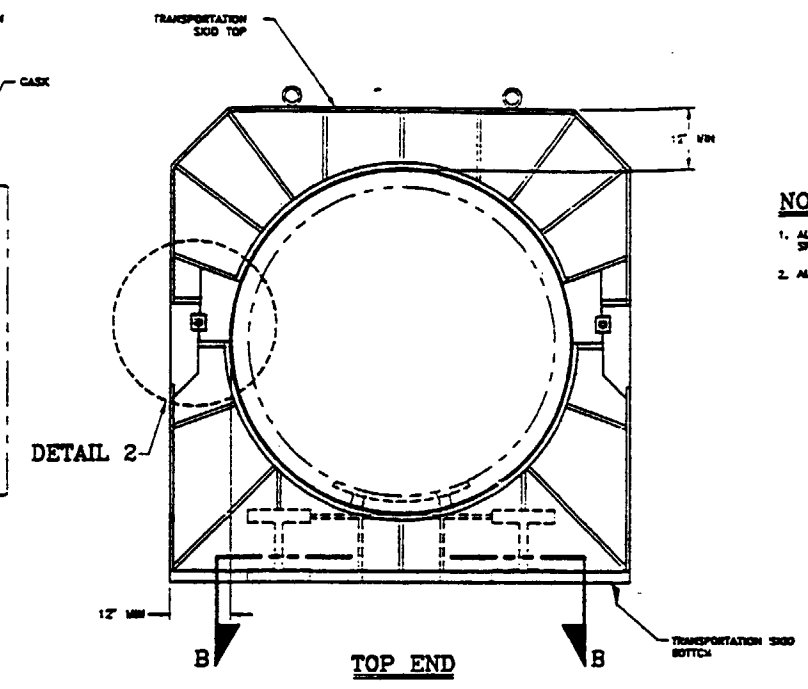

TOP END

NOTES:

1. ALL PLATES ARE A36 CARBON STEEL, MINIMUM OF 3/4" THICK, UNLESS OTHERWISE SPECIFIED.
2. ALL WELDING SHALL BE IN ACCORDANCE WITH REQUIREMENTS OF AWS D1.1.

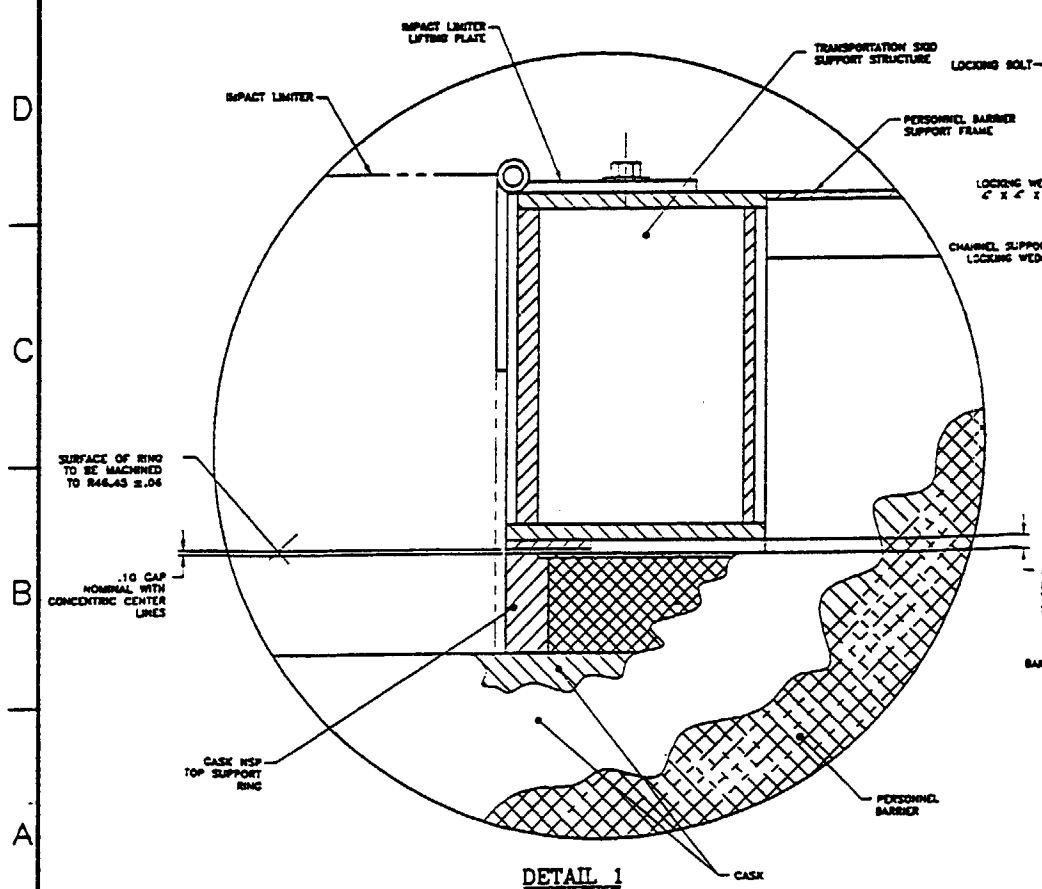

DETAIL 1

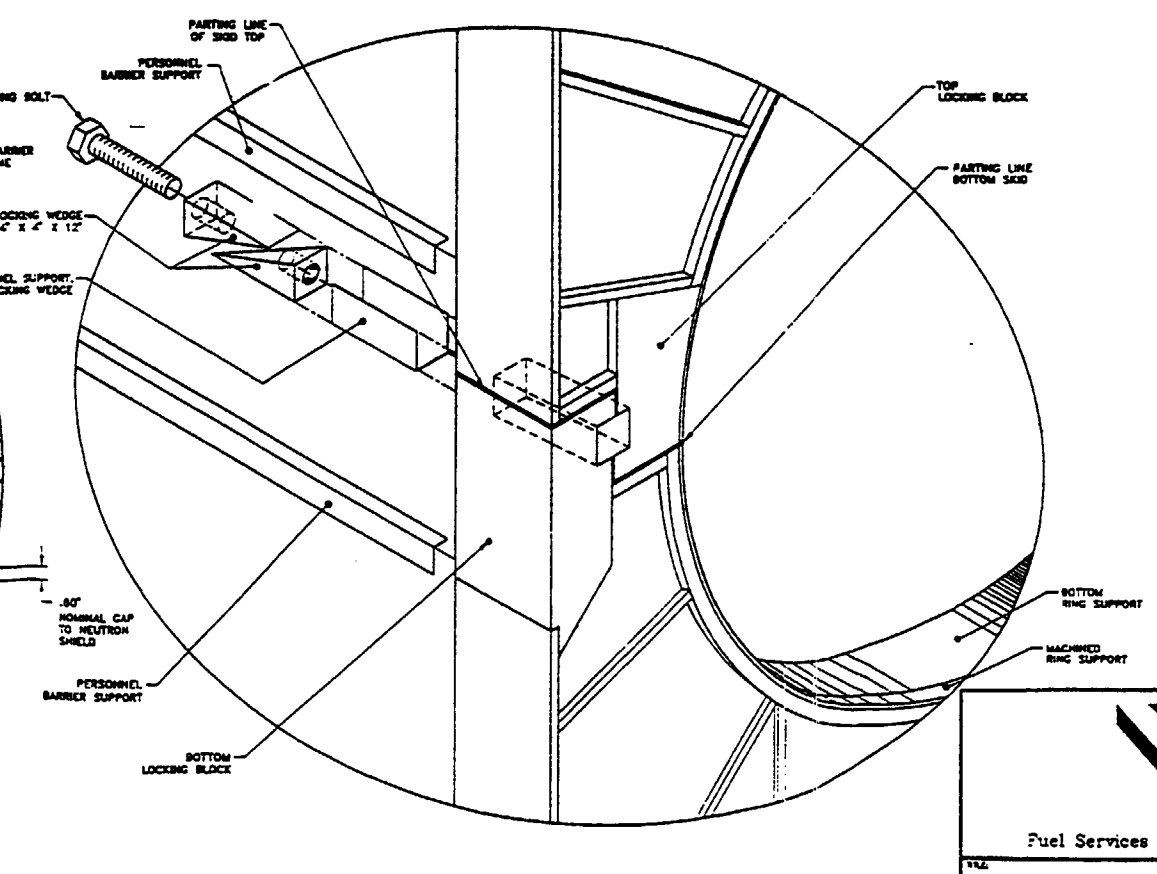

DETAIL 2
(TOP/BOTTOM END
EXPLODED ISOMETRIC, TYP BOTH ENDS)

VECTRA
Fuel Services - San Jose, California

NUHOMS-MP187
MULTI-PURPOSE TRANSPORTATION SKID/PERSONNEL BARRIER

FILE NO.	DWG NO.	SCALE	SHEET	REV NO.
NUH005.4006	NUH-05-4006NP	NONE	1 OF 2	1

E (34 x 44)

REV	DESCRIPTION:	DRAWN:	DESIGN:	CHECK:	P.E.	E.M.	Q.A.	P.M.
	(SEE SHEET 1 FOR REVISIONS)							

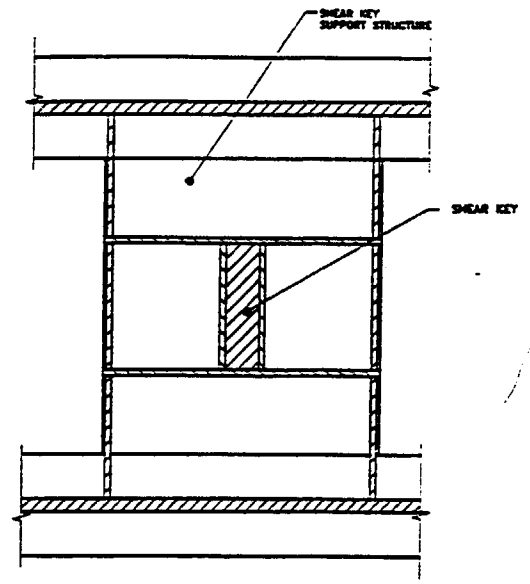

SECTION A-A

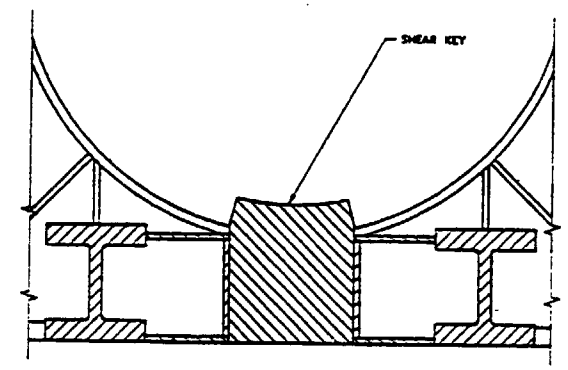

SECTION B-B
(CASK NOT SHOWN)

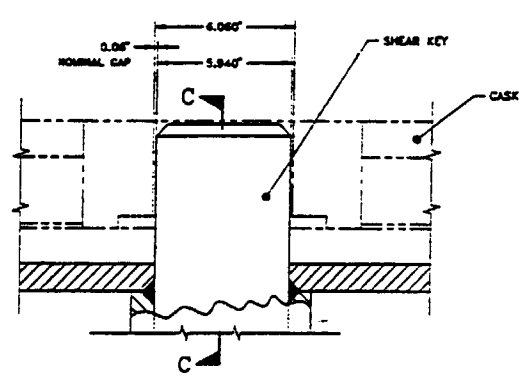

DETAIL 3
(SHEAR KEY/CASK INTERFACE)

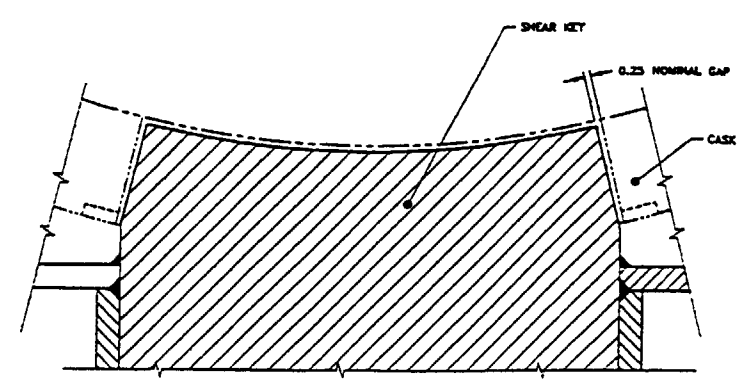

SECTION C-C

VECTRA
Fuel Services - San Jose, California

NUHOMS-MP187
MULTI-PURPOSE TRANSPORTATION
SKID/PERSONNEL BARRIER

FILE NO.	DWG. NO.	SCALE	SHEET	REV. NO.
NUH005.4006	NUH-05-4006NP	NONE	2 OF 2	1

E (34 X 44)