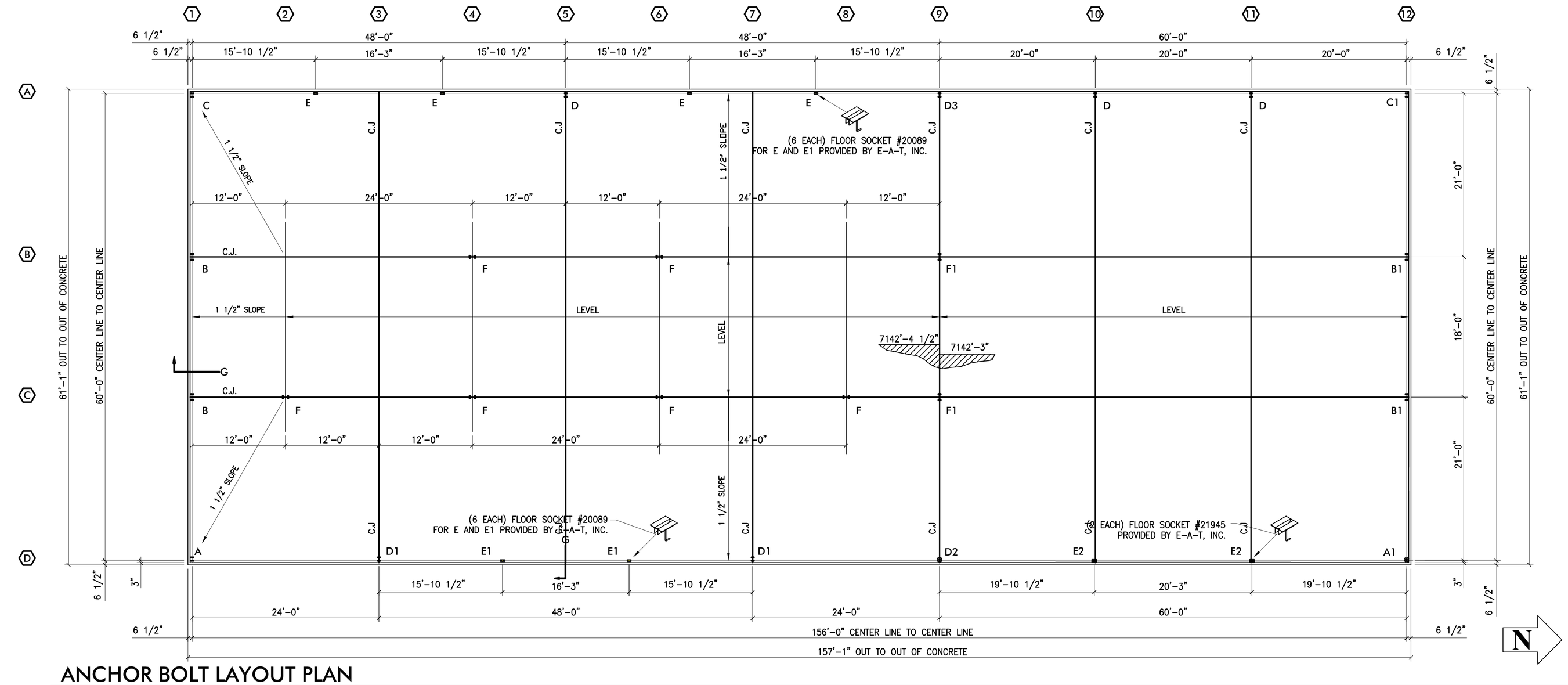

ANCHOR BOLT LAYOUT PLAN

GENERAL NOTES:

1. COLUMNMS AND BASE PLATES ARE TO BE PROVIDED AND INSTALLED BY OTHERS. SHOWN FOR INFORMATION ONLY.
2. FLOOR SOCKET TO BE INSTALLED BY CONTRACTOR. PARTS TO BE PURCHASED FROM ERECT-A-TUBE.
3. DRAWING AND DETAILS PROVIDED BY ERECT-A-TUBE, HARVARD, ILLINOIS (815) 943-4091. VERIFY ACCURACY OF DRAWING AND DIMENSIONS WITH ERECT-A-TUBE AND LOS ALAMOS COUNTY AIRPORT MANAGER PRIOR TO CONSTRUCTION.
4. COORDINATE ALL PARTS PROVIDED BY ERECT-A-TUBE, HARVARD, ILLINOIS (815) 943-4091. CONTACT JON HOWELL (EXT. 220).

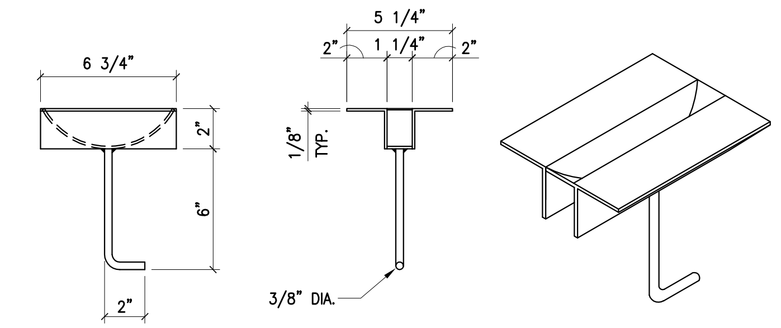

FLOOR SOCKET #20089 DETAIL

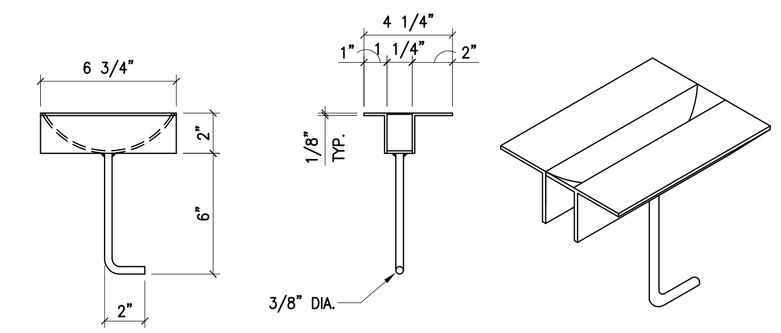

FLOOR SOCKET #21945 DETAIL

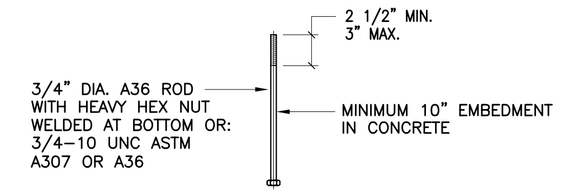

ANCHOR BOLT
(PROVIDED BY CTI INC.)

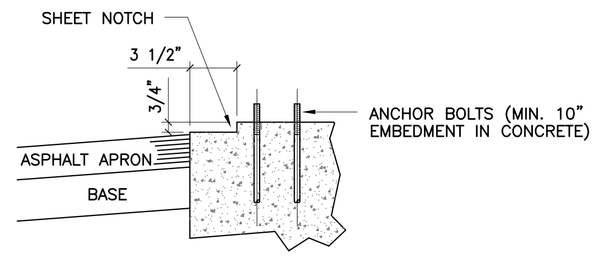

SECTION "G"

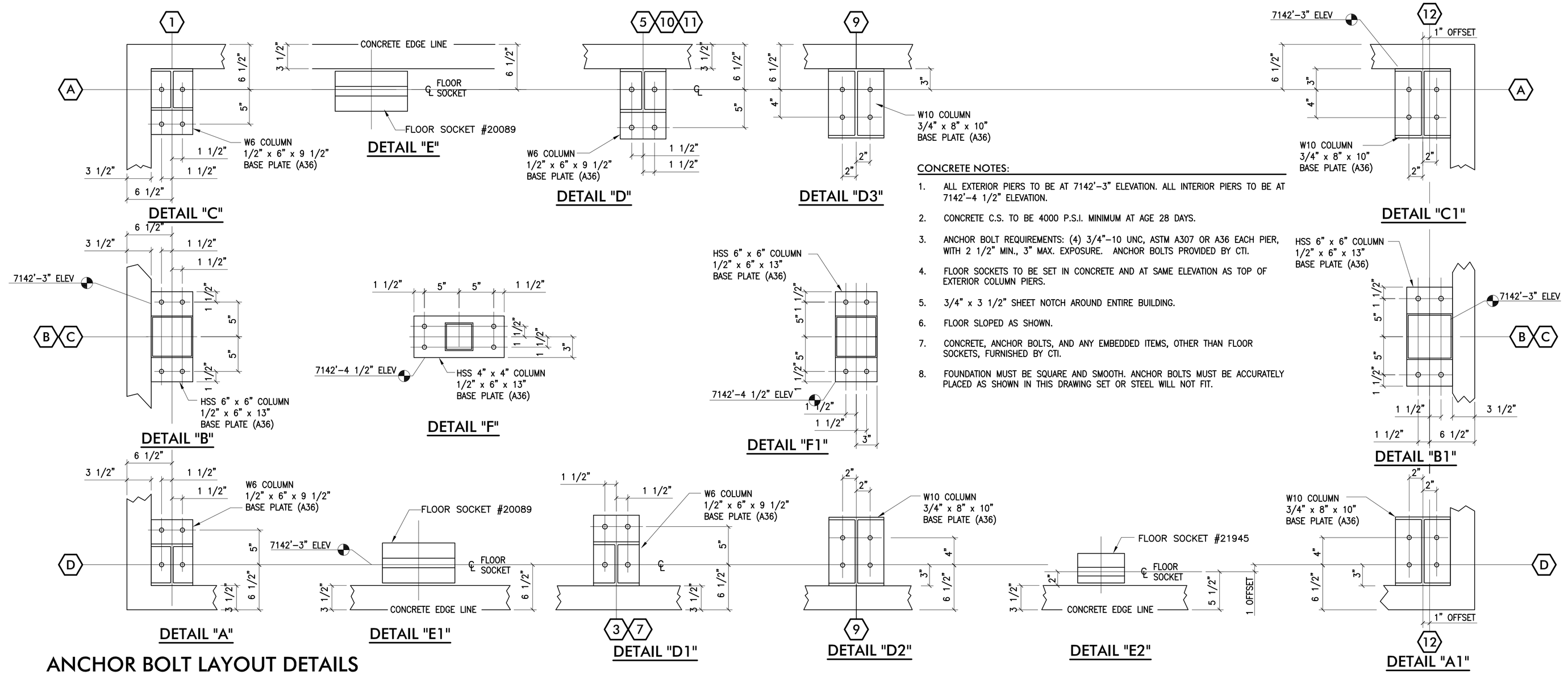

ANCHOR BOLT LAYOUT DETAILS

CONCRETE NOTES:

1. ALL EXTERIOR PIERS TO BE AT 7142'-3" ELEVATION. ALL INTERIOR PIERS TO BE AT 7142'-4 1/2" ELEVATION.
2. CONCRETE C.S. TO BE 4000 P.S.I. MINIMUM AT AGE 28 DAYS.
3. ANCHOR BOLT REQUIREMENTS: (4) 3/4"-10 UNC, ASTM A307 OR A36 EACH PIER, WITH 2 1/2" MIN., 3" MAX. EXPOSURE. ANCHOR BOLTS PROVIDED BY CTI.
4. FLOOR SOCKETS TO BE SET IN CONCRETE AND AT SAME ELEVATION AS TOP OF EXTERIOR COLUMN PIERS.
5. 3/4" x 3 1/2" SHEET NOTCH AROUND ENTIRE BUILDING.
6. FLOOR SLOPED AS SHOWN.
7. CONCRETE, ANCHOR BOLTS, AND ANY EMBEDDED ITEMS, OTHER THAN FLOOR SOCKETS, FURNISHED BY CTI.
8. FOUNDATION MUST BE SQUARE AND SMOOTH. ANCHOR BOLTS MUST BE ACCURATELY PLACED AS SHOWN IN THIS DRAWING SET OR STEEL WILL NOT FIT.

NO	DATE	CLASS REV	ADC	DESCRIPTION	DWN	DSGN	CHKD	SUB	APP

U.S. DEPARTMENT OF ENERGY
ENVIRONMENTAL MANAGEMENT LOS ALAMOS FIELD OFFICE
LOS ALAMOS AIRPORT LANDFILL COVER REPLACEMENT

TITLE
HANGAR PAD
ANCHOR BOLT LAYOUT

DRAWN	M.W.M.
DESIGN	S.F.D.
CHECKED	S.F.D.
DATE	11/15

SUBMITTED
APPROVED FOR RELEASE

Dwyer Engineering, LLC
Environmental, Geotechnical, Civil, Structural Engineering

SHEET — 8 OF 8

CONTRACT NO. DE-EM0002882
DRAWING NO 3004
REV 1