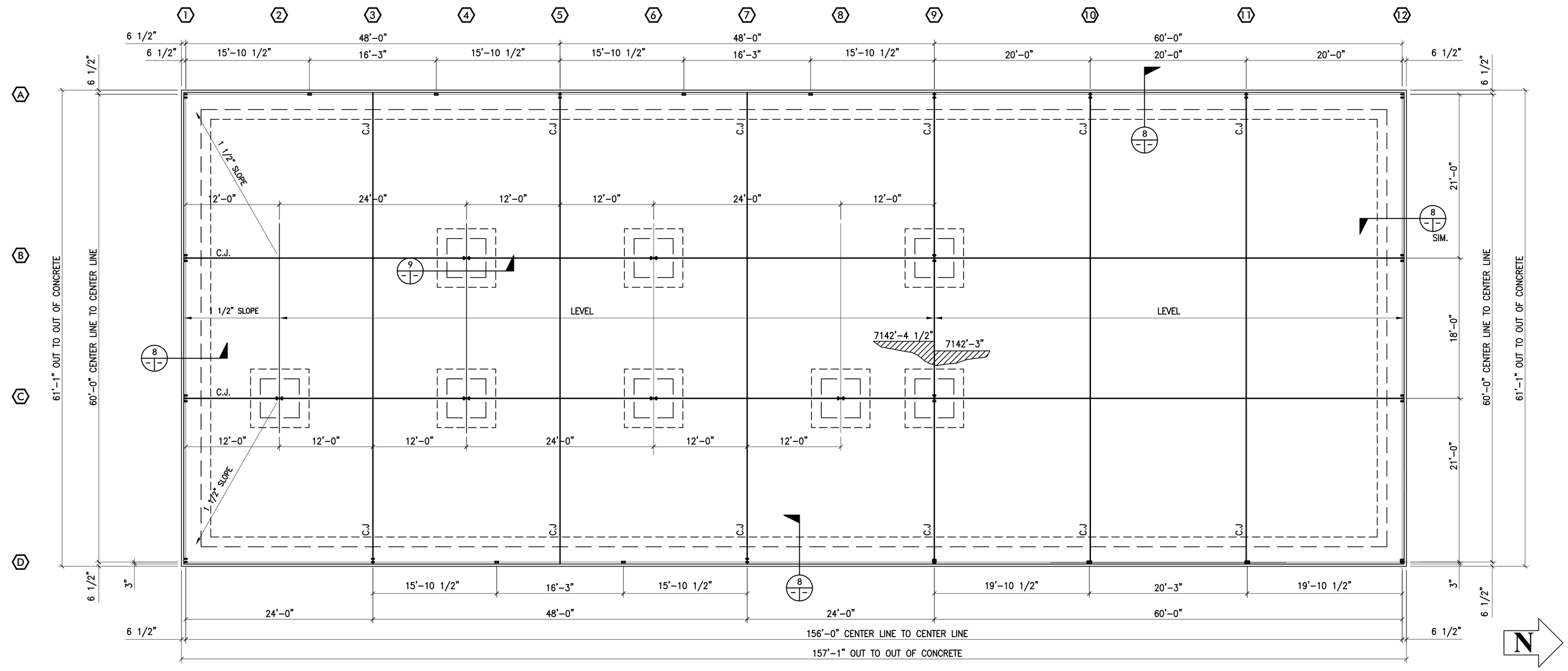

HANGAR PAD FOUNDATION PLAN

SCALE: 1/8" = 1'-0"

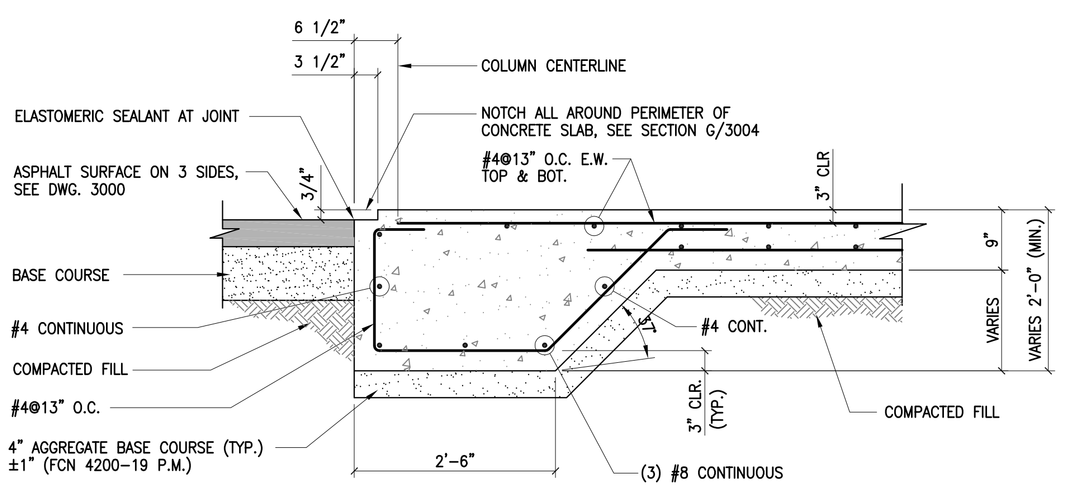

8 TYPICAL SECTION

3003 3003

SCALE: 3/4" = 1'-0"

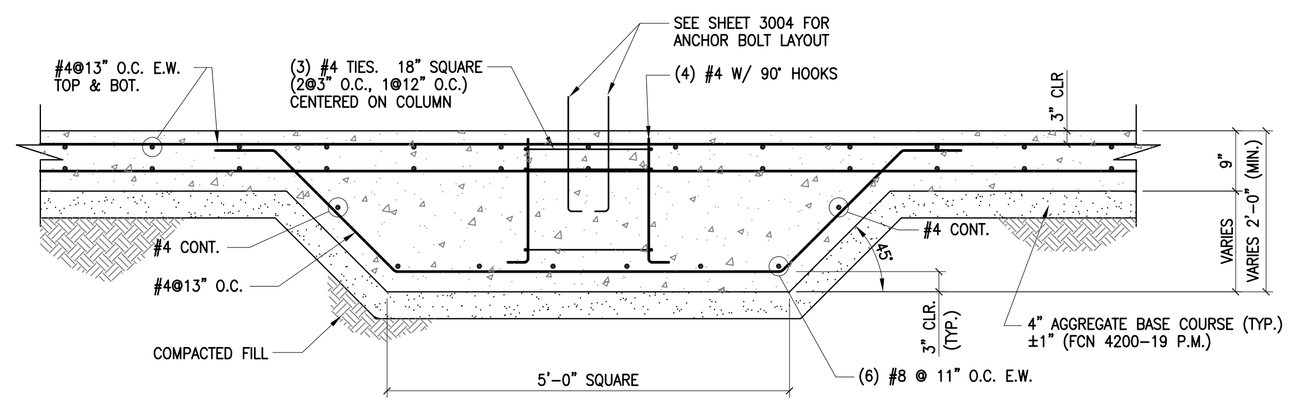

9 TYPICAL SECTION

3003 3003

SCALE: 3/4" = 1'-0"

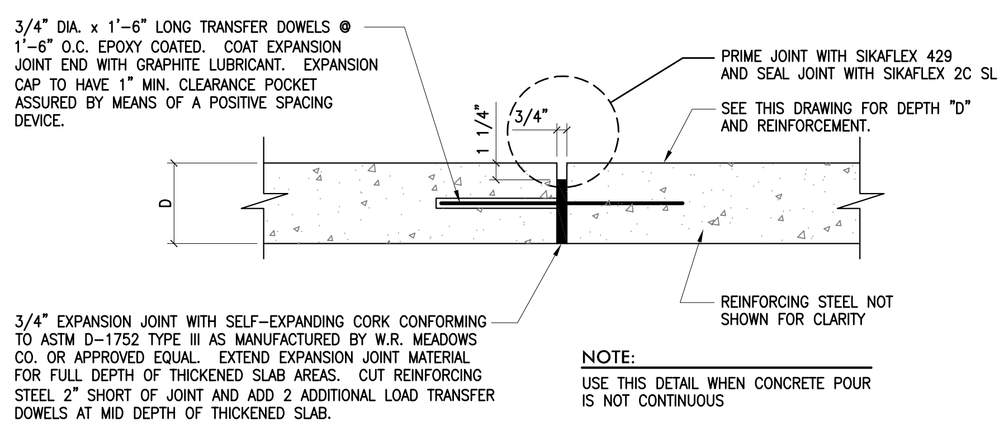

NOTE:
USE THIS DETAIL WHEN CONCRETE POUR IS NOT CONTINUOUS

TYPICAL SLAB CONSTRUCTION/EXPANSION JOINT DETAIL (CJ)

SCALE: 1 1/2" = 1'-0"

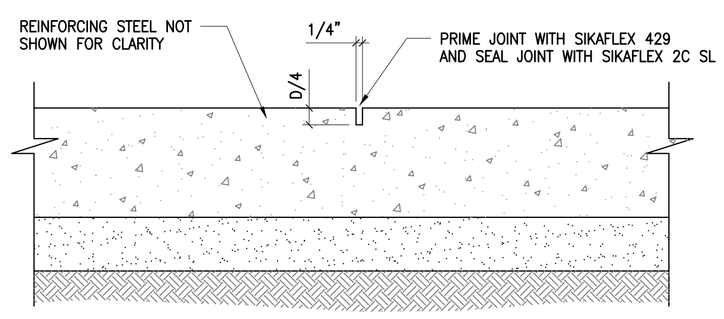

TYPICAL SLAB CONTROL JOINT DETAIL (CJ)

SCALE: 1 1/2" = 1'-0"

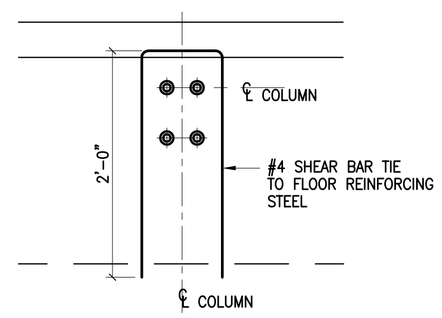

NOTE:
USE 180° BEND AND PLACE DIAGONALLY AT THE FOUR OUTSIDE CORNERS.

TYPICAL ENLARGED PLAN AT EXTERIOR COLUMN AND AT FLOOR SOCKETS

NO SCALE

NO	DATE	CLASS REV	ADC	DESCRIPTION	DWN	DSGN	CHKD	SUB	APP

U.S. DEPARTMENT OF ENERGY
ENVIRONMENTAL MANAGEMENT LOS ALAMOS FIELD OFFICE
LOS ALAMOS AIRPORT LANDFILL COVER REPLACEMENT

TITLE
HANGAR PAD FOUNDATION PLAN

DRAWN	M.W.M.
DESIGN	S.F.D.
CHECKED	S.F.D.
DATE	11/15

SUBMITTED

APPROVED FOR RELEASE

Dwyer Engineering, LLC
Environmental, Geotechnical, Civil, Structural Engineering

SHEET — 7 OF 8

CONTRACT NO. DE-EM0002882 | DRAWING NO 3003 | REV 1