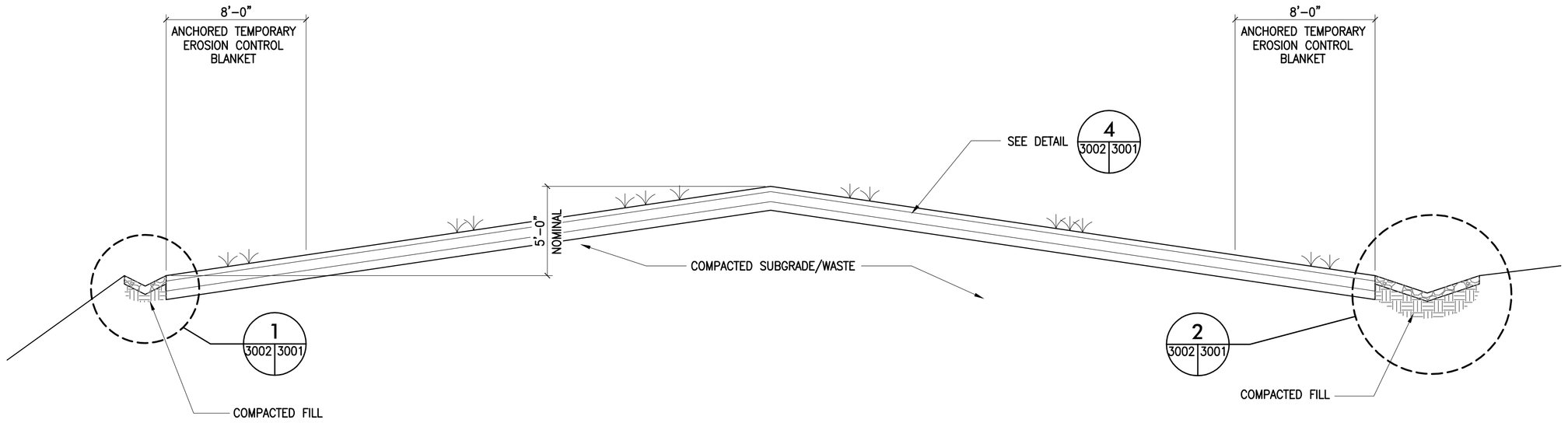

NOTE:

1. BASE OF LANDFILL TO NOMINALLY MATCH EXISTING ELEVATION.
2. ANCHORED TEMPORARY EROSION CONTROL BLANKET TO BE ANCHORED TO THE ENTIRE INSIDE PERIMTER OF THE LANDFILL COVER FINAL SURFACE AFTER SEEDING.

D 3000 3002 LANDFILL COVER TYPICAL SECTION

NOT TO SCALE

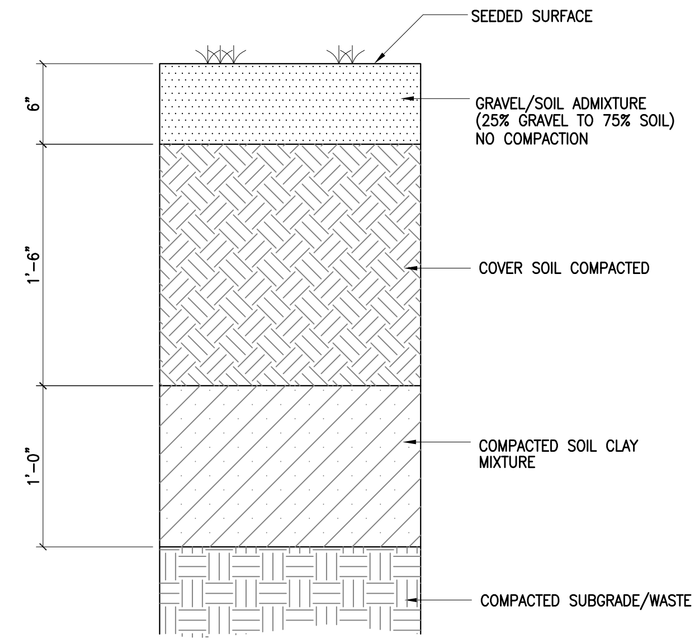

4 3002 3002 TYPICAL COVER PROFILE

SCALE: 1 1/2" = 1'–0"

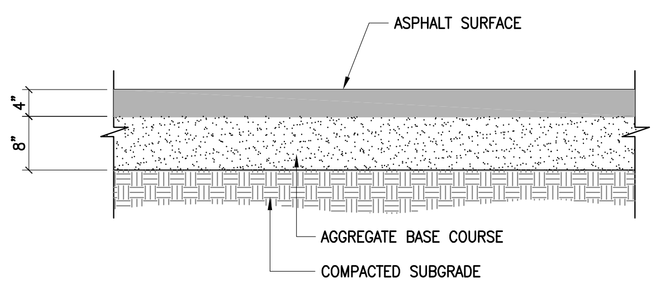

5 3001 3002 TYPICAL ASPHALT PAVEMENT PROFILE

SCALE: 3/4" = 1'–0"

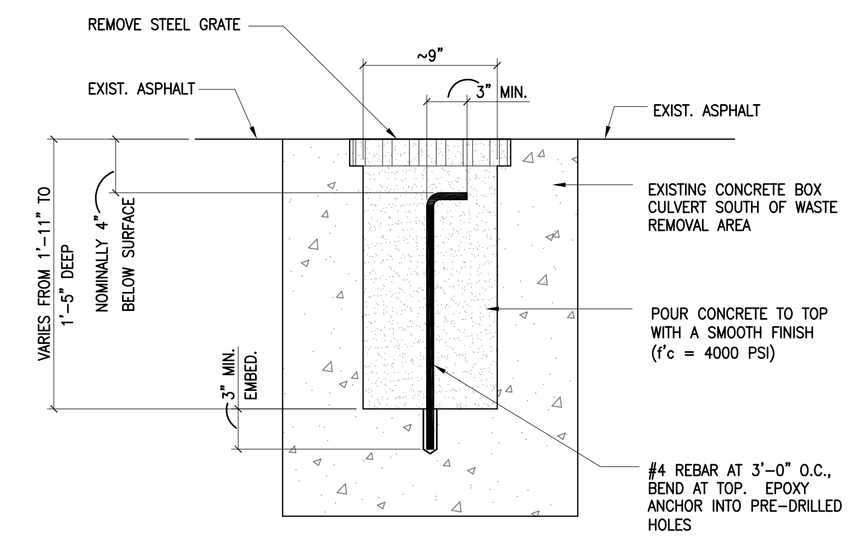

10 3001 3002 CONCRETE PLUG OF REMAINING BOX CULVERT

SCALE: 1 1/2" = 1'–0"

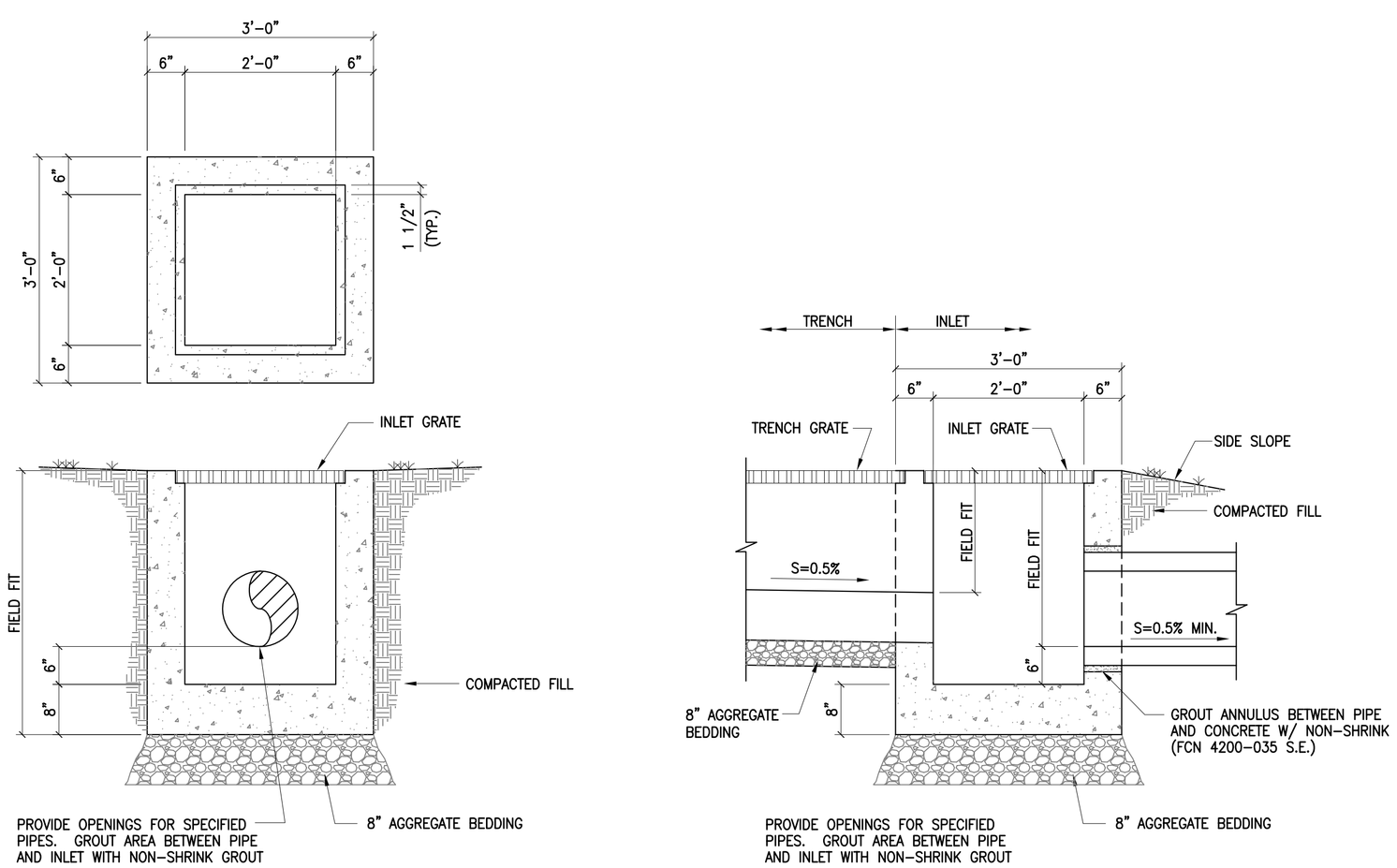

6 3001 3002 CONCRETE CULVERT AND INLET

SCALE: 3/4" = 1'–0"

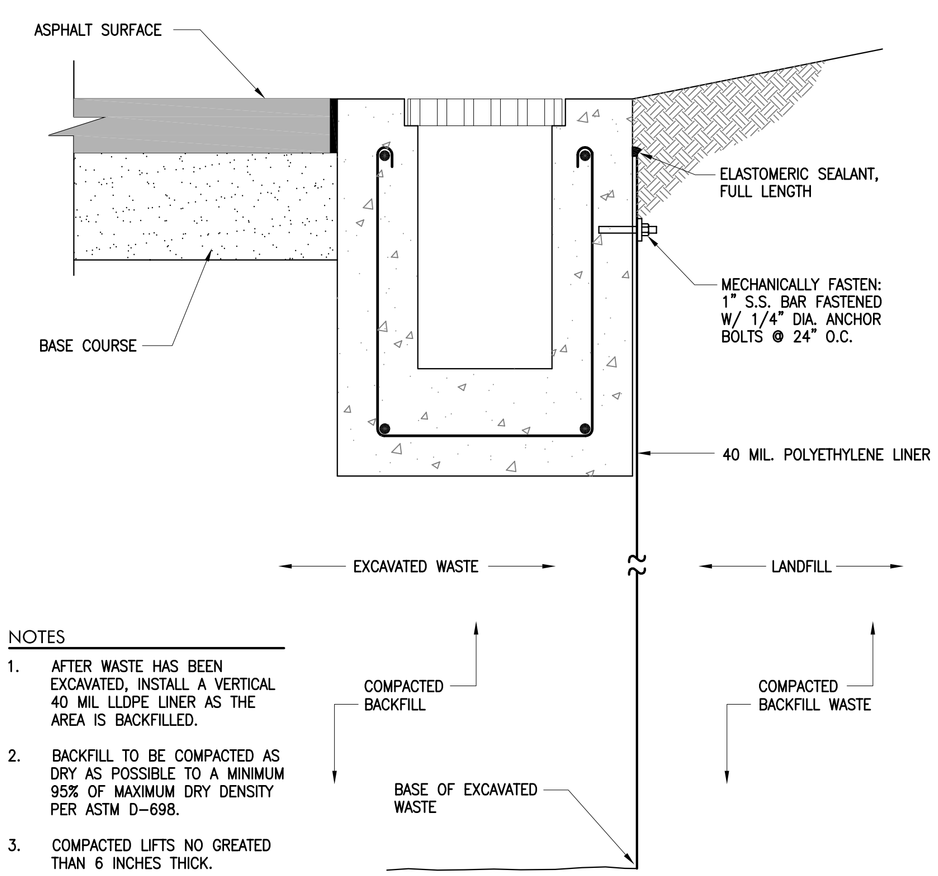

NOTES

1. AFTER WASTE HAS BEEN EXCAVATED, INSTALL A VERTICAL 40 MIL LLDPE LINER AS THE AREA IS BACKFILLED.
2. BACKFILL TO BE COMPACTED AS DRY AS POSSIBLE TO A MINIMUM 95% OF MAXIMUM DRY DENSITY PER ASTM D–698.
3. COMPACTED LIFTS NO GREATED THAN 6 INCHES THICK.

7 3001 3002 TYPICAL COVER PROFILE

SCALE: 1 1/2" = 1'–0"

NO	DATE	CLASS REV	ADC	DESCRIPTION	DWN	DSGN	CHKD	SUB	APP

U.S. DEPARTMENT OF ENERGY
ENVIRONMENTAL MANAGEMENT LOS ALAMOS FIELD OFFICE
LOS ALAMOS AIRPORT LANDFILL COVER REPLACEMENT

TITLE: DETAILS

DRAWN	M.W.M.
DESIGN	S.F.D.
CHECKED	S.F.D.
DATE	11/15

SUBMITTED

APPROVED FOR RELEASE

Dwyer Engineering, LLC
Environmental, Geotechnical, Civil, Structural Engineering

SHEET — 6 OF 8

CONTRACT NO. DE–EM0002882 | DRAWING NO 3002 | REV 1