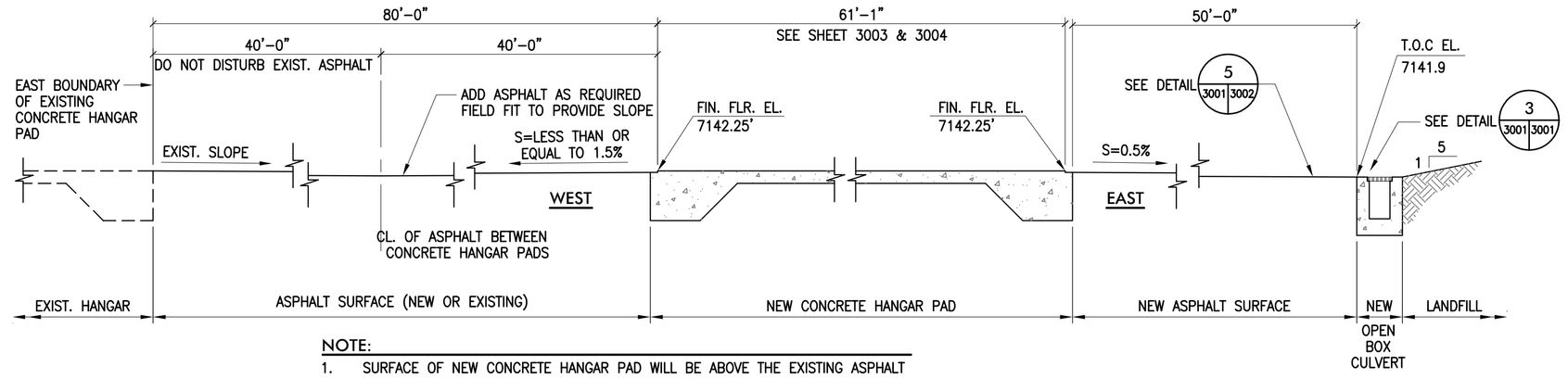

NOTE:

1. SURFACE OF NEW CONCRETE HANGAR PAD WILL BE ABOVE THE EXISTING ASPHALT SURFACE (TO BE REMOVED) TO ALLOW FOR CONSTRUCTION OF ASPHALT SLOPE AWAY FROM HANGAR.
2. ASPHALT TO SLOPE AWAY FROM NEW CONCRETE HANGAR PAD AND NEW ASPHALT APRON TOWARD THE SOUTH A MAXIMIM SLOPE OF 1.5% SIMILAR TO THAT SHOWN FOR THE WEST SIDE.

A (3000 3001) SECTION A-A

SCALE: 1/4" = 1'-0"

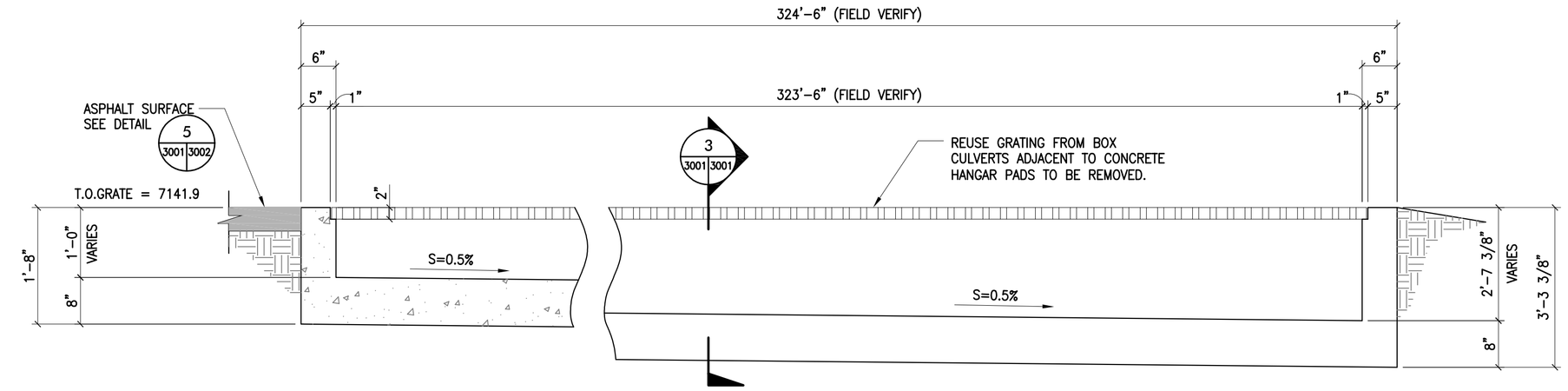

B (3000 3001) CONCRETE BOX CULVERT SECTION

SCALE: 3/4" = 1'-0"

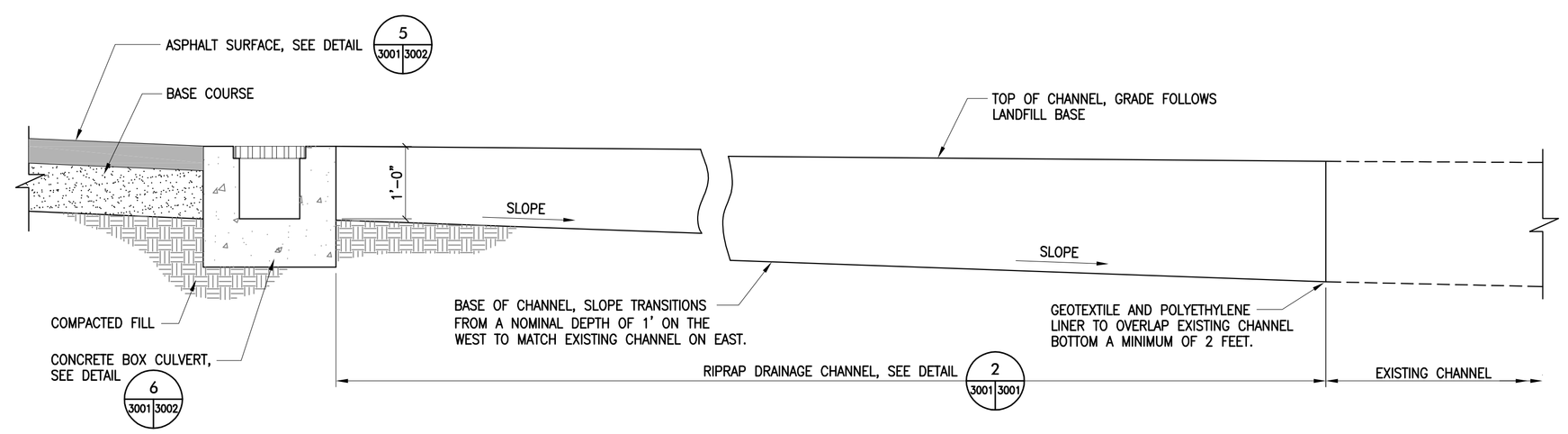

C (3000 3001) SOUTH DRAINAGE CHANNEL SECTION

SCALE: 3/4" = 1'-0"

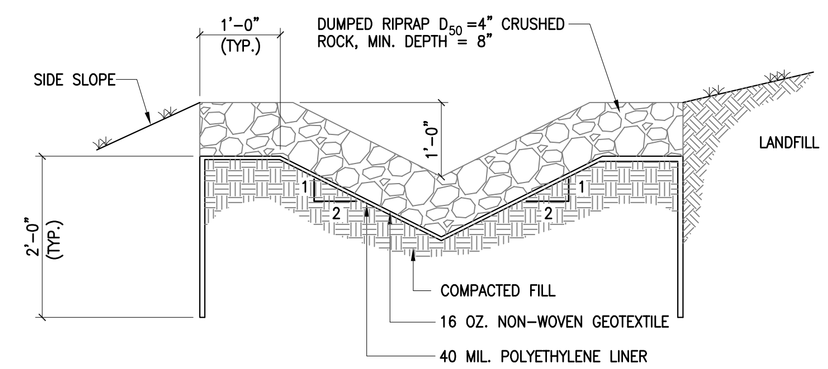

1 (3000 3001) NORTH DRAINAGE CHANNEL

SCALE: 3/4" = 1'-0"

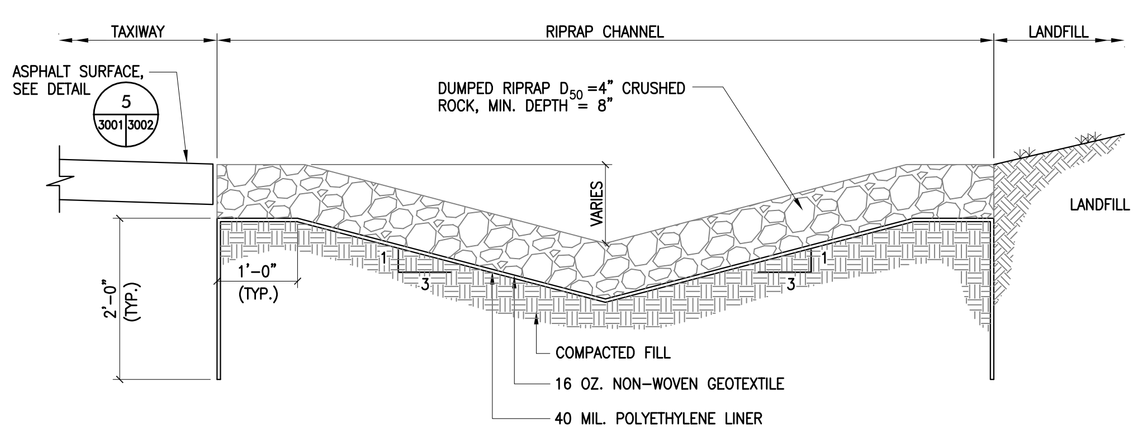

2 (3000 3001) SOUTH DRAINAGE CHANNEL

SCALE: 3/4" = 1'-0"

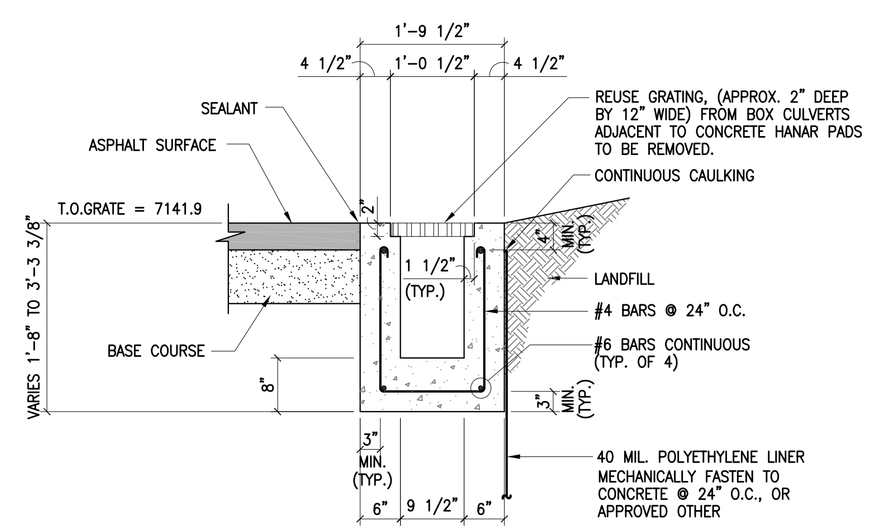

3 (3000 3001) CONCRETE BOX CULVERT DETAIL

SCALE: 3/4" = 1'-0"

NO	DATE	CLASS REV	ADC	DESCRIPTION	DWN	DSGN	CHKD	SUB	APP

U.S. DEPARTMENT OF ENERGY
ENVIRONMENTAL MANAGEMENT LOS ALAMOS FIELD OFFICE
LOS ALAMOS AIRPORT LANDFILL COVER REPLACEMENT

TITLE: SECTIONS AND DETAILS

DRAWN	M.W.M.
DESIGN	S.F.D.
CHECKED	S.F.D.
DATE	11/15

SUBMITTED

APPROVED FOR RELEASE

Dwyer Engineering, LLC
Environmental, Geotechnical, Civil, Structural Engineering

SHEET — 5 OF 8

CONTRACT NO. DE-EM0002882 | DRAWING NO 3001 | REV 1