REVISIONS			
LTR	DESCRIPTION	DATE	APPROVED

NOTES: UNLESS OTHERWISE SPECIFIED ON THIS DRAWING

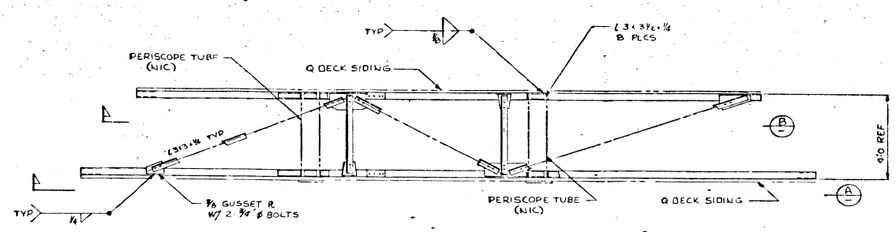

PLAN VIEW
SCALE: ½" = 1'-0

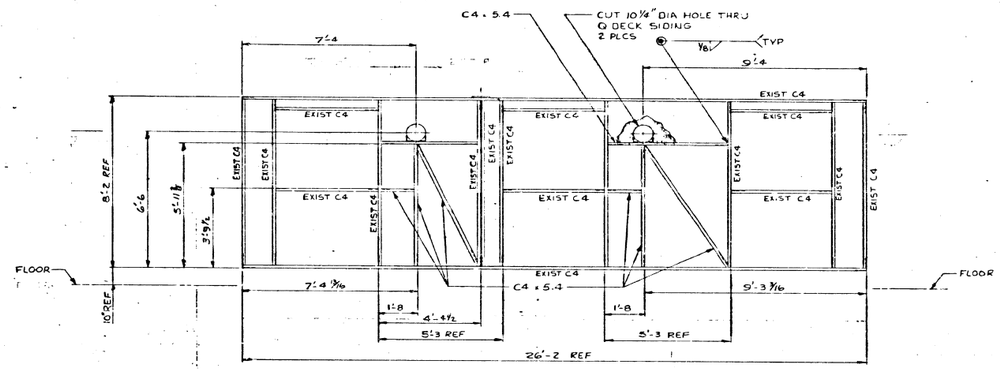

SECTION B
SCALE ½" = 1'-0

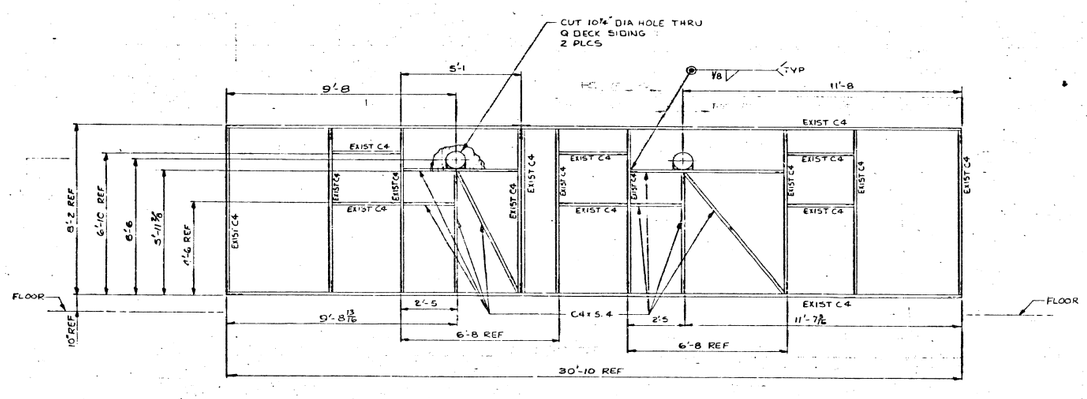

VIEW A
SCALE: ½" = 1'-0

HALF SIZE PRINT

DR BY	LANGFORD, P.	8-1-75
CHK BY	J.H. BECKER	8-6-75
M & P		
STRESS		

Rockwell International Corporation
Atomics International Division

WALL PANEL MODIFICATIONS
CRBRP FHC MOCKUP TEST

SIZE	CODE IDENT NO.	DRAWING NO.
E	09974	303-024-SX1

SCALE ½" = 1' SHEET 1 OF 1

MICROFILMED