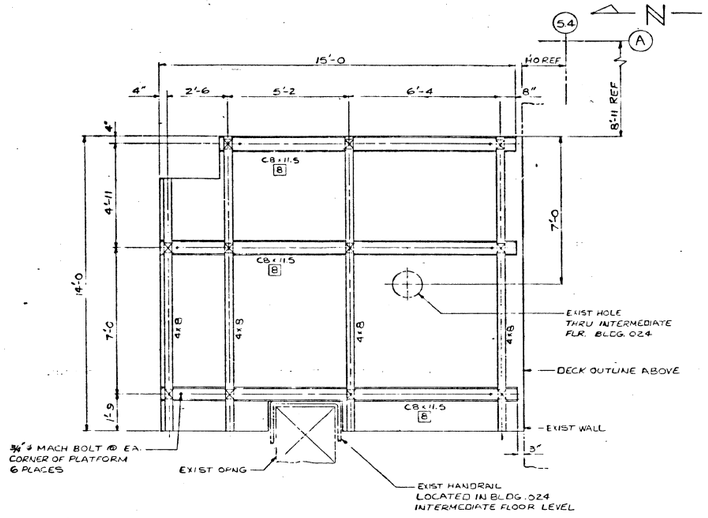

MAIN FRAMING-PLAN
1/2" = 1'-0

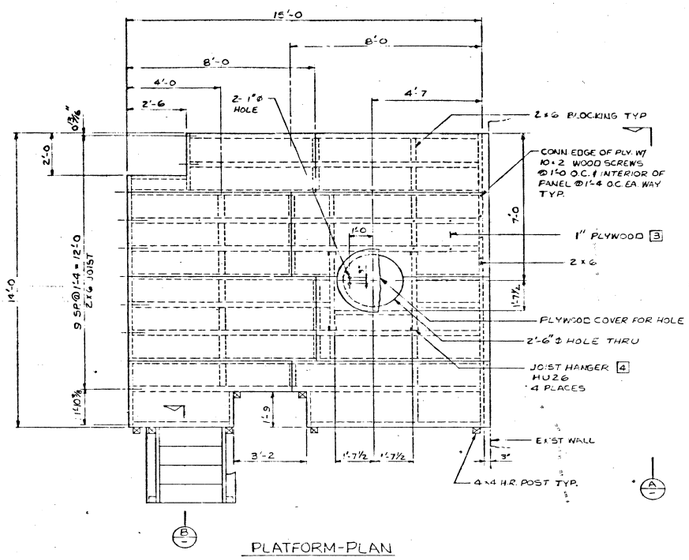

PLATFORM-PLAN
SCALE: 1/2" = 1'-0
(HANDRAILS OMITTED FOR CLARITY)

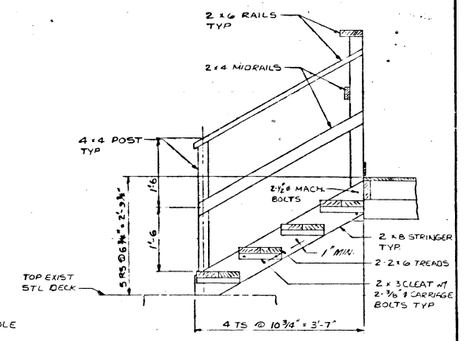

SECTION B
SCALE: 1" = 1'-0

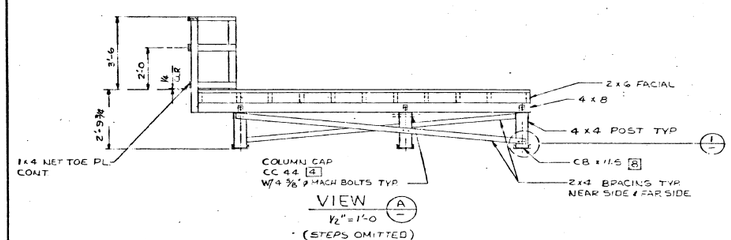

VIEW A
1/2" = 1'-0
(STEPS OMITTED)

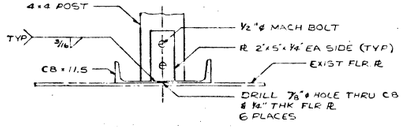

DETAIL 1
SCALE: 3" = 1'-0

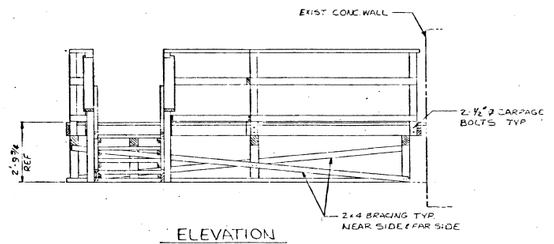

ELEVATION
1/2" = 1'-0

NOTES

1. WORK SHALL CONFORM TO UNIFORM BUILDING CODE.
2. LUMBER TO BE DOUGLAS FIR S4S CONSTRUCTION GRADE NO. 1
3. PLYWOOD SHALL BE B-C GRADE OR BETTER INTERIOR TYP - TONGUE & GROOVED.
4. STEEL CONNECTORS SHALL BE SIMPSON TYPE OR APPROVED EQUAL
5. PAINT COMPLETE STRUCTURE WITH A SEAL COAT AND 2 FINISH COATS, ENAMEL CITRON-IGE SINCLAIR NO. 5336 OR APPROVED EQUAL.
6. NAILING
   ALL 2x6 & LARGER = 3-16d BOX-END NAIL OR TOE NAILED
   ALL 2x4 & SMALLER 2-16d BOX-END NAIL OR TOE NAILED.
7. UP-SET THREADS ON ALL MACH BOLTS AFTER TORQUING BOLTS. USE WASHERS UNDER NUTS.
8. STRUCTURAL STEEL FURNISHED BY ROCKWELL INT.

LEGEND

- NEW CONSTRUCTION
- EXISTING CONSTRUCTION
- HIDDEN
- CENTER LINE

REV.	DATE	DESCRIPTION	BY	BY

FACILITIES ENGINEERING — Rockwell International Corporation, Atomics International Division

SANTA SUSANA FIELD LABORATORY
FHC MOCKUP CORRIDOR PLATFORM
PLANS-ELEVATIONS & DETAILS

APPROVED BY: [signature]	DESIGNED BY: J.N. Becker	RELEASE DATE: 5-5-76	REF. NO: PEWR 75662
APPROVED BY:	DRAWN BY: [signature]		
APPROVED BY:	CHECKED BY: [signature]	DRAWING NO. 303-024-S13	REV. NO.

HALF SIZE PRINT

MICROFILMED