REVISIONS			
SYM	DESCRIPTION	DATE	APPROVED

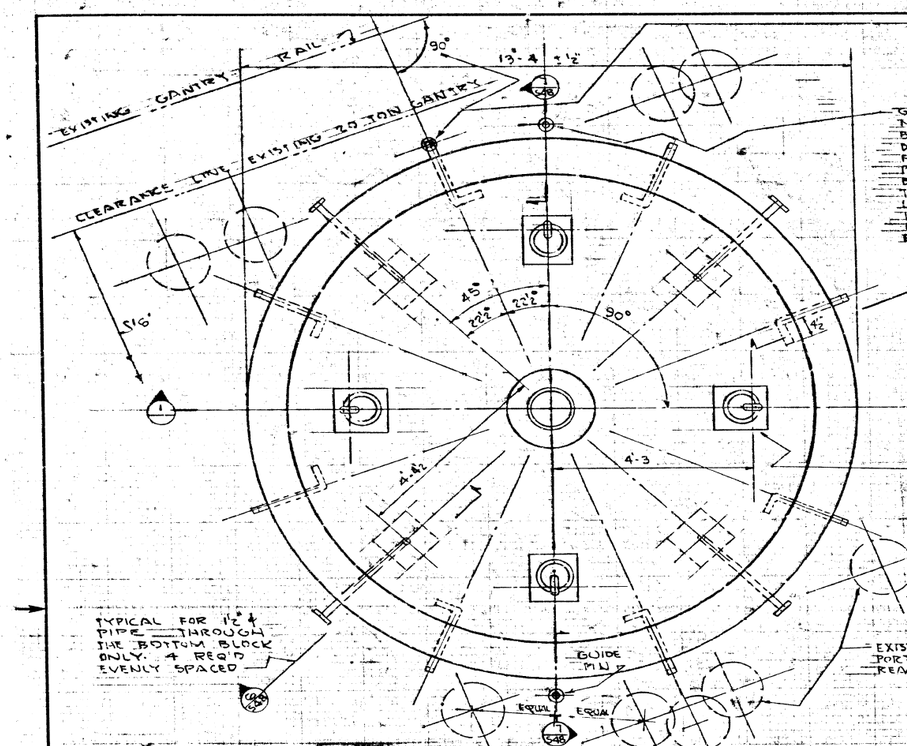

TYPICAL FOR 1½ ϕ PIPE THROUGH THE BOTTOM BLOCK ONLY. 4 REQ'D EVENLY SPACED

NOTE TOP BLOCK NOT SHOWN THIS PLAN

PLAN
¾" = 1'-0

LOCATE THIS SLEEVE IN THE FLOOR AS SHOWN. SLEEVE IN FLOOR AS SHOWN SECT 7/48

GUIDE PIN NOTE THAT THERE WILL BE 9 NEW HOLES DRILLED IN THE EXISTING FLOOR FOR THE GUIDE PINS. 3 HOLES SHALL BE DRILLED AT EACH OF THE THREE REACTOR LOCATIONS IN THE ROOM. LOCATE SLEEVES IN FLOOR EQUAL DISTANCE BETWEEN EXISTING FLOOR HOLES AS SHOWN

TYPICAL FOR SIDE RINGS. 16 REQ'D. 8 EACH EQUALLY SPACED TOP & BOTTOM BLOCK.

LIFTING DETAILS FOR BLOCKS FOUR (4) EACH REQUIRED FOR TOP & BOTTOM BLOCKS. LOCATION FOR TOP BLOCK SAME AS BOTTOM BLOCK. SEE DET. A

EXISTING PERISCOPE PORTS & INSTRU PORTS REACTOR ROOM FLOOR

RING TO BE CABLECO LOCAL SUPPLIER CABLE DISTRIBUTORS LOS ANGELES OR "HERC-ALLOY" MASTER RING OR EQUAL. LOCAL SUPPLIER GARRETT SUPPLY CO. 3844-S. SANTA FE AVE

2A & 2

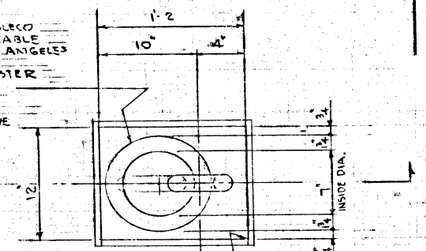

DET A
2" = 1'-0

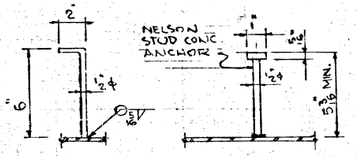

THE BUILDER MAY USE EITHER OF THE ABOVE ANCHORING METHODS

DET B
3" = 1'-0

TYPICAL CONCRETE ANCHOR

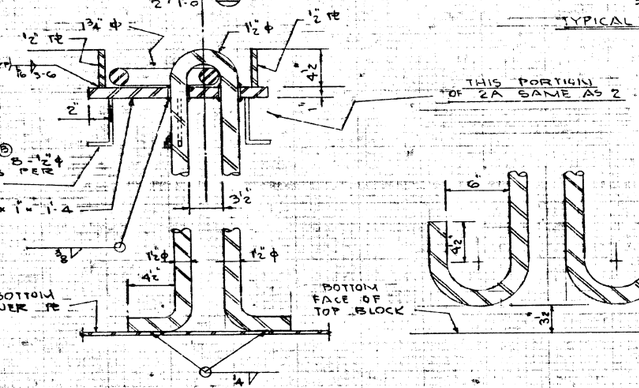

SECT 2
2" = 1'-0
FOR BOTTOM BLOCK

SECT 2A
2" = 1'-0
FOR TOP BLOCK

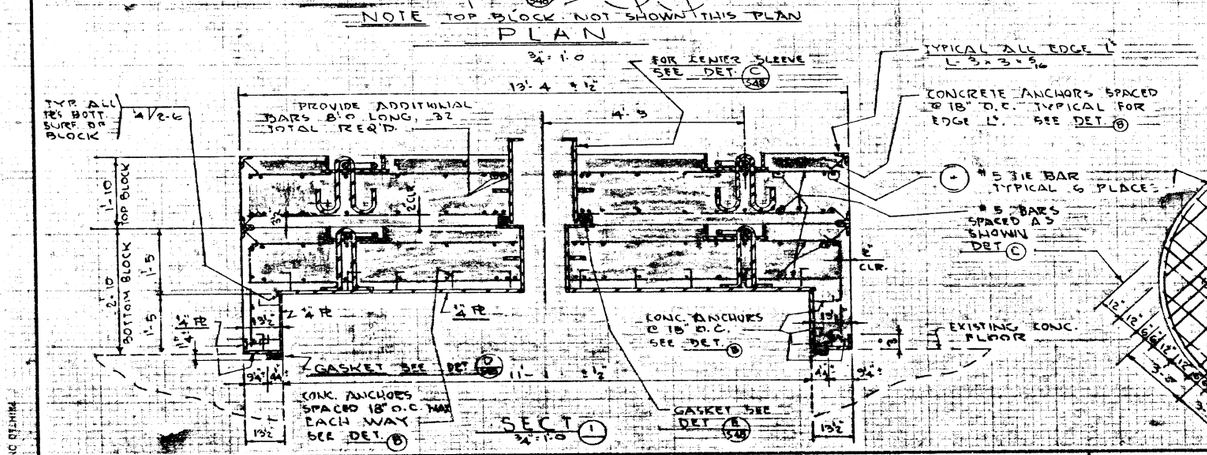

SECT 1
¾" = 1'-0

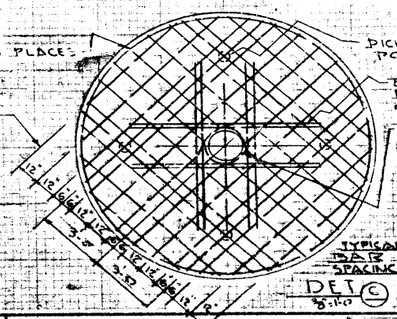

DET C
¾" = 1'-0

FOR NOTES SEE DWG 5 4B

PEWR - 71221

NOTICE

THIS DRAWING INVOLVES CONFIDENTIAL PROPRIETARY DESIGN INFORMATION OF ATOMICS INTERNATIONAL, A DIVISION OF NORTH AMERICAN AVIATION, INC. AND ALL RIGHTS ARE EXPRESSLY RESERVED. IT IS SUBMITTED UNDER A TRUST RELATIONSHIP FOR A SPECIFIED PURPOSE. IT IS AGREED THAT IT WILL NOT BE USED FOR ANY OTHER PURPOSE NOR ITS CONTENTS REVEALED TO ANYONE EXCEPT FOR THAT PURPOSE, NOR COPIED IN WHOLE OR IN PART, NOR ITS DESIGN FEATURES USED IN OTHER PROJECTS. IT WILL BE RETURNED TO ATOMICS INTERNATIONAL WHEN NO LONGER REQUIRED OR UPON REQUEST.

ATOMICS INTERNATIONAL
A DIVISION OF NORTH AMERICAN AVIATION, INC.
8900 DESOTO AVENUE, CANOGA PARK, CALIF.

SANTA SUSANA FACILITY — BLDG D24
CELL SHIELD PLUG
PLAN & SECTIONS

DRAWN	M. S.	DWG.	303-D24-547
CHECKED		SIZE D	
ENGINEER		SCALE	
APPROVED		DATE	SHEET NO. OF

REDUCED DRAWING