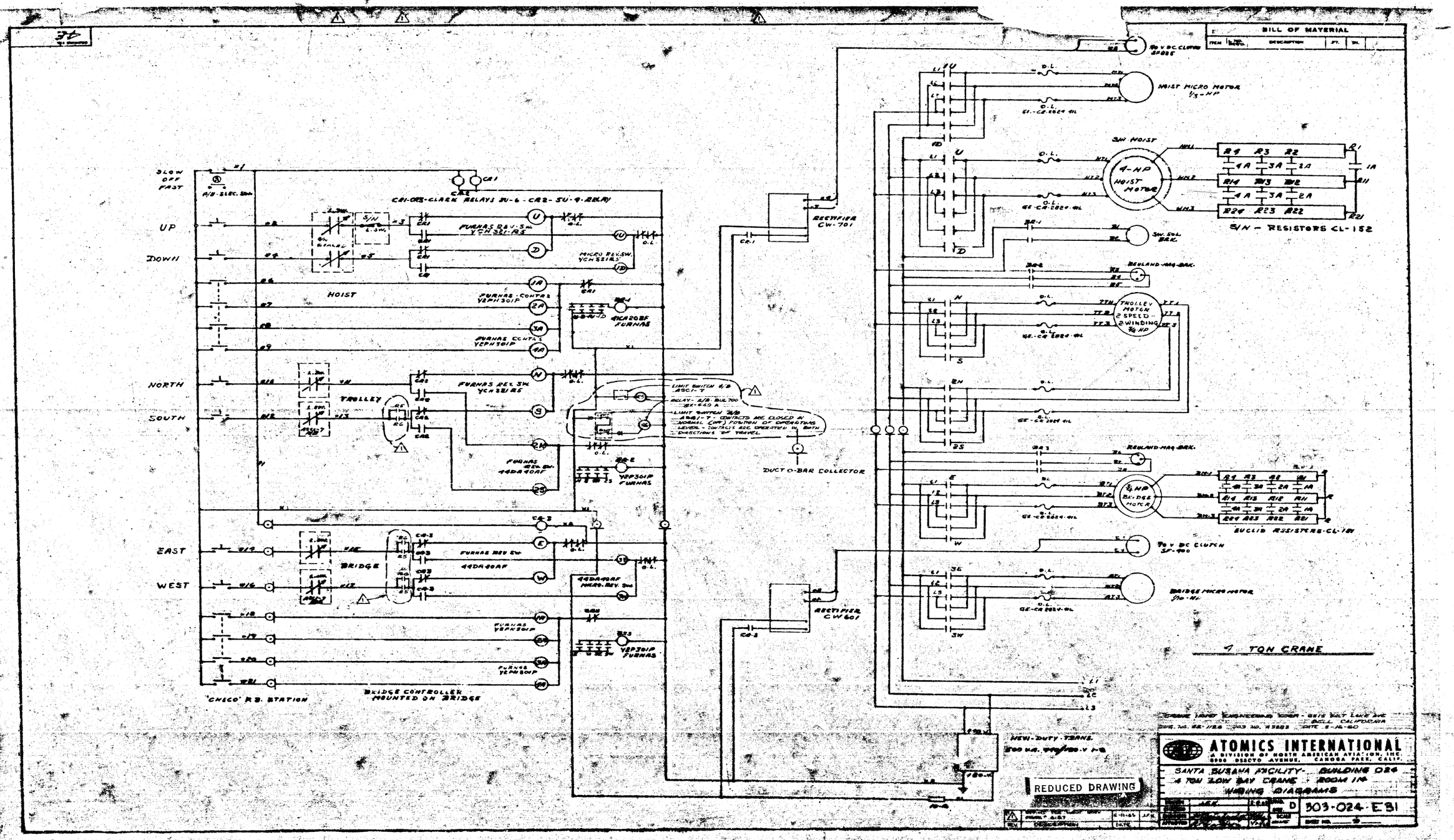
BILL OF MATERIAL
ITEM
DESCRIPTION
SLOW OFF FAST
UP
DOWN
HOIST
NORTH
SOUTH
TROLLEY
EAST
WEST
BRIDGE
CR1-ORS-CLARK RELAYS 3U-6 - CR2-5U-9-RELAY
FURNAS REV. SW. YCH 321-R3
MICRO REV. SW. YCH 321R3
FURNAS CONTACT YCH 301P
MICR20BF FURNAS
FURNAS REV. SW. YCH 321R5
FURNAS REV. SW. 44DA40AF
YEP301P FURNAS
FURNAS REV. SW. 44DA40AF
44DA40AF MICRO. REV. SW.
YEP301P FURNAS
'CHECO' R.B. STATION
BRIDGE CONTROLLER MOUNTED ON BRIDGE
LIMIT SWITCH 1/B ABC/1-T
RELAY - 1/B BUL 700 BX-640 A
LIMIT SWITCH 2/B
ABC/1-T - CONTACTS ARE CLOSED AT NORMAL (OFF) POSITION OF OPERATING LEVER. CONTACTS ARE OPERATED IN BOTH DIRECTIONS OF TRAVEL.
DUCT O-BAR COLLECTOR
RECTIFIER CW-701
RECTIFIER CW 601
HOIST MICRO MOTOR 1/3-HP
SW HOIST
4-HP HOIST MOTOR
SW. SOL. BRK.
REULAND-MAG-BRK.
TROLLEY MOTOR 2 SPEED - 2 WINDING 3/4 HP
REULAND-MAG-BRK.
3/4 HP BRIDGE MOTOR
SW-1 R1 R2 R3
1A 2A 3A 4A
R11 R12 R13 R14
R21 R22 R23 R24
S/N - RESISTORS CL-152
EUCLID RESISTERS-CL-181
90 V DC CLUTCH SF-100
BRIDGE MICRO MOTOR 1/10-HP
4 TON CRANE
HEAVY-DUTY TRANS.
REDUCED DRAWING
ATOMICS INTERNATIONAL
A DIVISION OF NORTH AMERICAN AVIATION, INC.
8900 DESOTO AVENUE, CANOGA PARK, CALIF.
SANTA SUSANA FACILITY - BUILDING 024
4 TON LOW BAY CRANE - ROOM 114
WIRING DIAGRAMS
D
303-024-E31