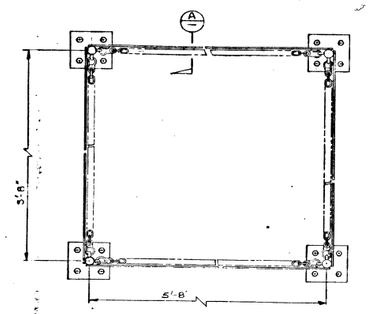

DETAIL 1/S8
SCALE: 1½"=1'-0"

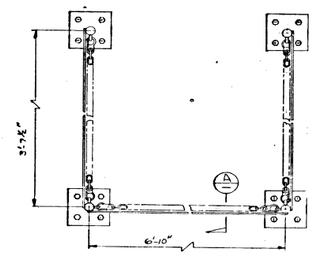

DETAIL 2/S8
SCALE: 1½"=1'-0"

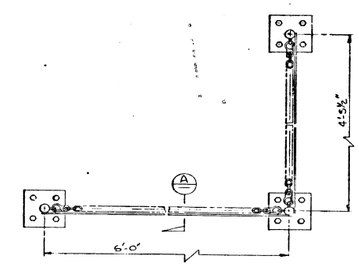

DETAIL 3/S8
SCALE: 1½"=1'-0"

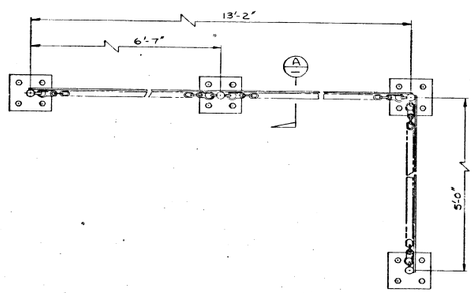

DETAIL 4/S8
SCALE: 1½"=1'-0"

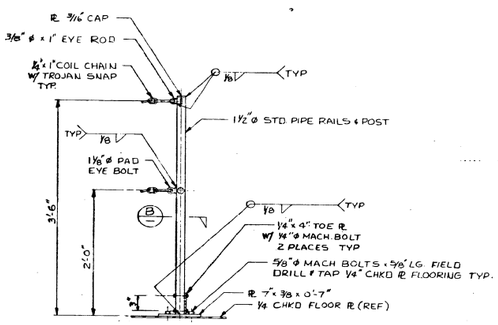

TYP HANDRAIL SECT. A
SCALE: 1½"=1'-0"

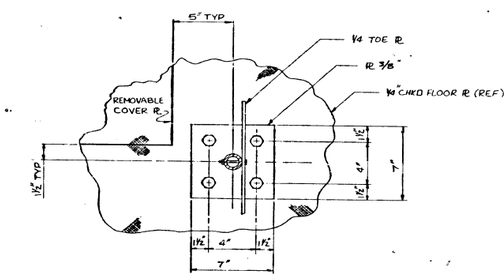

SECTION B
3"=1'-0"

NOTE

1. FOR GENERAL NOTES & LEGEND SEE DWG A13.

REV.	DATE	DESCRIPTION	BY	BY

FACILITIES ENGINEERING

Rockwell International Corporation
Atomics International Division

SANTA SUSANA FACILITY B/024
MOCKUP REMOTE HANDLING
STRUCTURAL HANDRAILS & DETAILS

APPROVED BY	DESIGNED BY J.N. [illegible]	RELEASE DATE	REF. NO. PEWR 75069
APPROVED BY	DRAWN BY D. LANGFORD		
APPROVED BY	CHECKED BY [illegible]	DRAWING NO. 303-024-S12	REV. NO.

HALF SIZE PRINT

MICROFILMED