REVISIONS			
SYM	DESCRIPTION	DATE	APPROVED

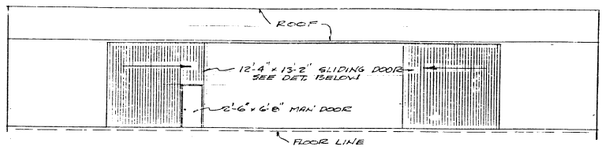

SOUTH ELEVATION SCALE 1/8" = 1'-0"

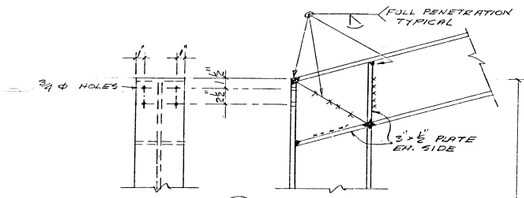

J 5-2 SCALE 1 1/2" = 1'-0"

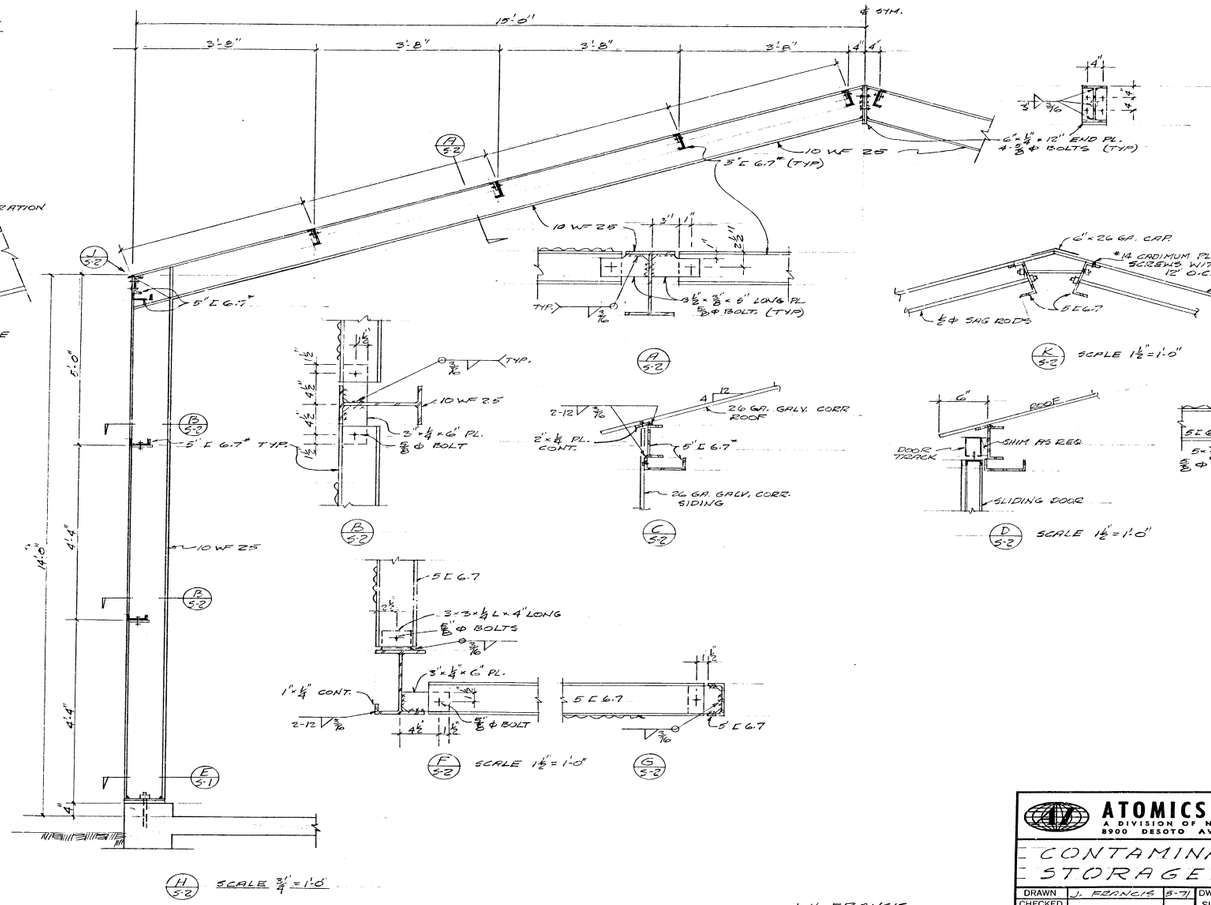

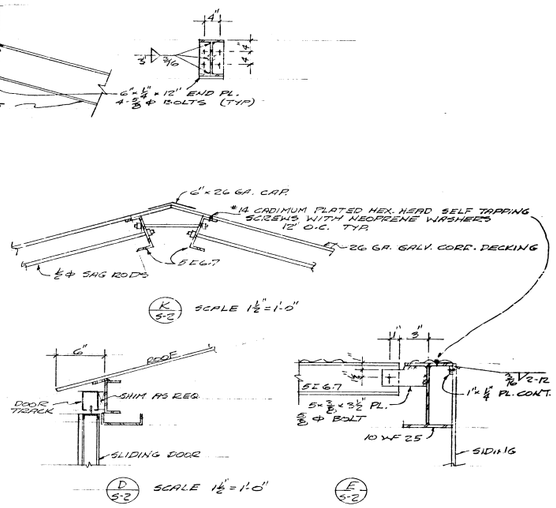

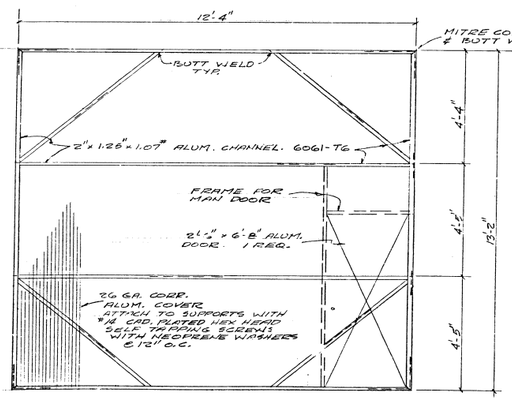

SLIDING DOOR - 2 REQ.

PROVIDE RICHARD-WILCOX HARDWARE 2 SETS #1027 1/2

PEWR# 63692

ATOMICS INTERNATIONAL
A DIVISION OF NORTH AMERICAN AVIATION, INC.
8900 DESOTO AVENUE, CANOGA PARK, CALIF.

CONTAMINATED EQUIP. STORAGE BLDG. 075

DRAWN	J. FRANCIS	8-71	DWG. SIZE D	303-075-S2
CHECKED			SCALE	
ENGINEER	J. FRANCIS	8-71		SHEET NO. ___ OF ___
APPROVED				

J.H. FRANCIS STRUCT. ENGR. #1255 367-8065

DIETERICH-POST CLEARPRINT 1020-B

FORM 234 R-7 NEW 74