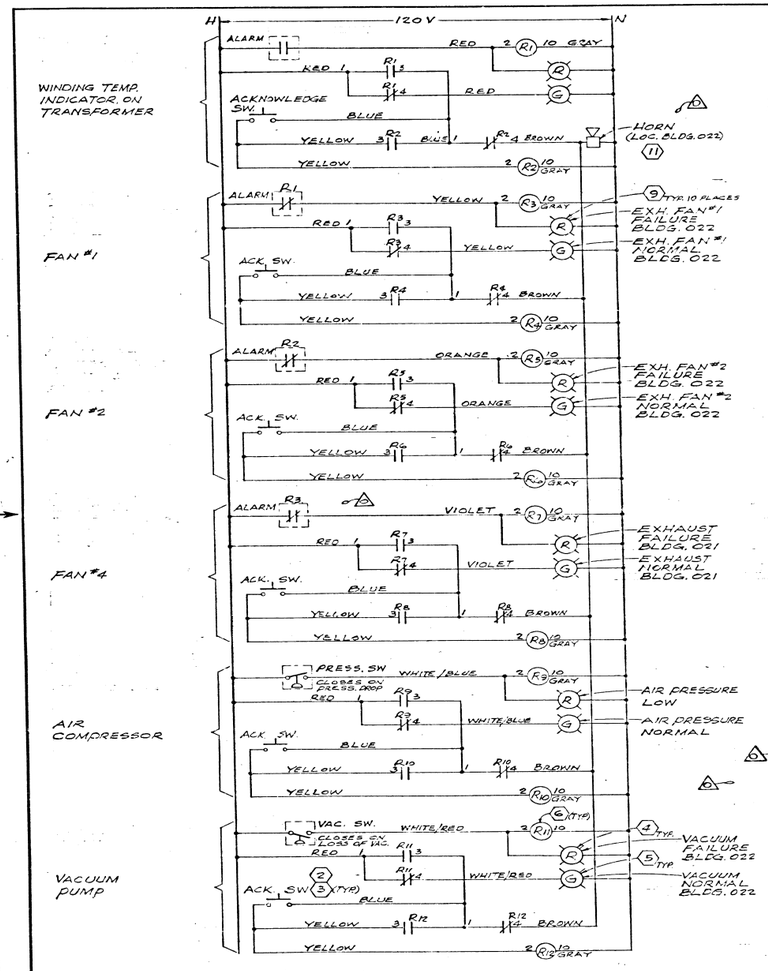

SCHEMATIC DIAGRAM
ALARM ANNUNCIATOR AND RELAY CABINET

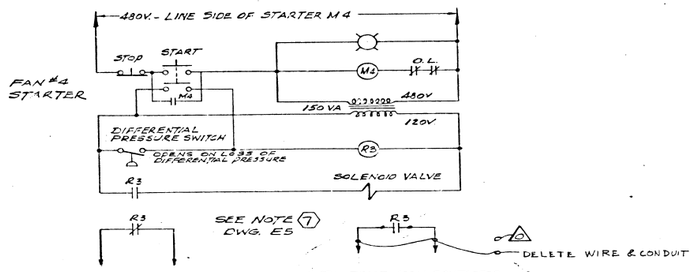

SCHEMATIC CONTROL DIAGRAM-FAN #4

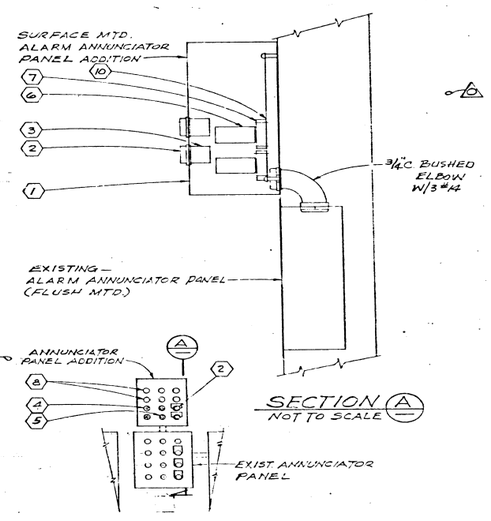

SECTION A
NOT TO SCALE

PARTIAL ELEVATION C
NOT TO SCALE E5

REVISIONS

SYM	DESCRIPTION	DATE	APPROVED
6	REPLACED RELAY "R5", SEE DWG. E5 ADDED ALARM ANNUNCIATOR COMPONENTS SEE SCHEMATIC DIAGRAM, PARTIAL ELEV. & SECTION A PEWR-75870	11-21-75	M.M.
1	DELETE INTERLOCK TO EVAP. HTR. CONTACTOR PEWR-75693	6-7-76	W/W

LEGEND

R INDICATING LIGHT, RED, ALARM CONDITION.

G INDICATING LIGHT, GREEN, NORMAL CONDITION.

NOTES

6 1. ANNUNCIATOR ENCLOSURE, 12 3/4"x 9 1/2"x 6", WITH PANEL, W/12 HOLE HINGED COVER HOFFMAN - CAT. "E-12RBY

2. PUSH BUTTON OPERATOR, BLACK, HEAVY DUTY, OIL TIGHT, SQ.D. CLASS-9001, TYPE-KR1B W/SPECIAL LEGEND PLATE, SQ.D CLASS 9001, TYPE KN-2

3. CONTACT BLOCK, SQ.D, CLASS 9001, TYPE KA2

4. STD. PILOT LIGHT, HEAVY DUTY OIL TIGHT, (RED) 120V, SQ.D. CLASS 9001, TYPE-KP-38R6 W/SPECIAL LEGEND PLATE, SQ.D CLASS 9001, TYPE KN-3

5. STD. PILOT LIGHT, HEAVY DUTY, OIL TIGHT, (GREEN) 120V, SQ.D. CLASS 9001 TYPE - KP-38G6 W/SPECIAL LEGEND PLATE, SQ.D, CLASS 9001, TYPE KN-3

6. GENERAL PURPOSE RELAY, 3PDT, 10A, 120V, 60 HZ, SQ.D. CLASS-8501, TYPE-KP13 - 4 REQD

7. SOCKET, W/SCREW TERMINALS, 10A, 11 PINS, 3PDT, SQ.D, CLASS 8501, TYPE NR-2, - 4 REQD

8. PLUG UNUSED HO ES WITH KNOCKOUT SEALS

9. SPECIAL LEGEND PLATE, SQ.D. CLASS-9001, TYPE KN-3

10. PROVIDE 1/16" PLASTIC SHEET BETWEEN SOCKET AND MOUNTING PLATE.

11. DISCONNECT & REMOVE EXIST. LOCAL BUZZER & TRANSFORMER AND CONNECT NEW HORN

12. REFER TO DWG. 303-021-E5 FOR PLAN

13. LABEL ALL EXISTING & NEW PILOT LIGHTS

PEWR-75870

NOTICE

THIS DRAWING INVOLVES CONFIDENTIAL PROPRIETARY DESIGN INFORMATION OF ATOMICS INTERNATIONAL, A DIVISION OF NORTH AMERICAN AVIATION, INC. AND ALL RIGHTS ARE EXPRESSLY RESERVED. IT IS SUBMITTED UNDER A TRUST CONDITION THAT IT WILL BE USED FOR THE SPECIFIED PURPOSE. IT IS AGREED THAT IT WILL NOT BE USED FOR ANY OTHER PURPOSE, NOR ITS CONTENTS REVEALED TO ANYONE EXCEPT FOR THAT PURPOSE, NOR COPIED IN WHOLE OR IN PART, NOR ITS DESIGN FEATURES USED IN OTHER PROJECTS. IT WILL BE RETURNED TO ATOMICS INTERNATIONAL WHEN NO LONGER REQUIRED OR UPON REQUEST.

ATOMICS INTERNATIONAL
A DIVISION OF NORTH AMERICAN AVIATION, INC.
8900 DESOTO AVENUE, CANOGA PARK, CALIF.

SANTA SUSANA FIELD LABORATORY
RIA WASTE & FUEL STORAGE BLDGS. 21 & 22
ALARM ANNUNCIATOR MOD. & DIAGRAMS

DRAWN	E. PRADEZ	DWG. SIZE D	303-021-E9
CHECKED	J. [illegible]	SCALE	
ENGINEER	M. [illegible]	SHEET NO.	OF
APPROVED			

REDUCED DRAWING

MICROFILMED