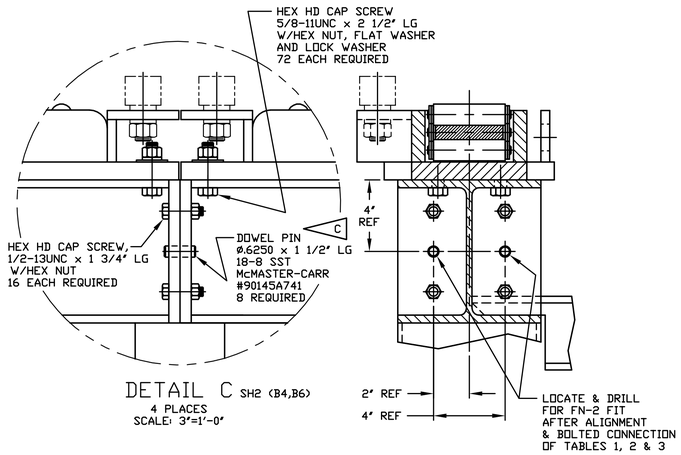

DETAIL C SH2 (B4,B6)
4 PLACES
SCALE: 3"=1'-0"

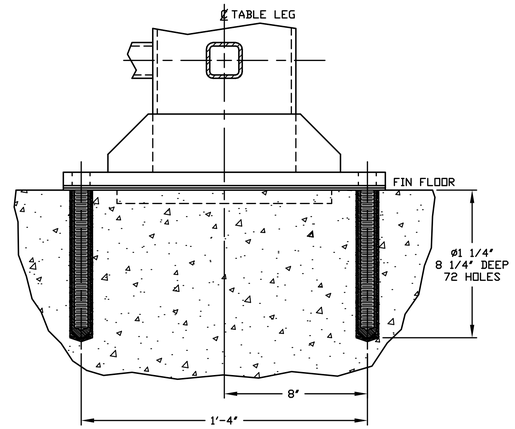

SECTION D-D SH2 (C7)
SCALE: 3"=1'-0"

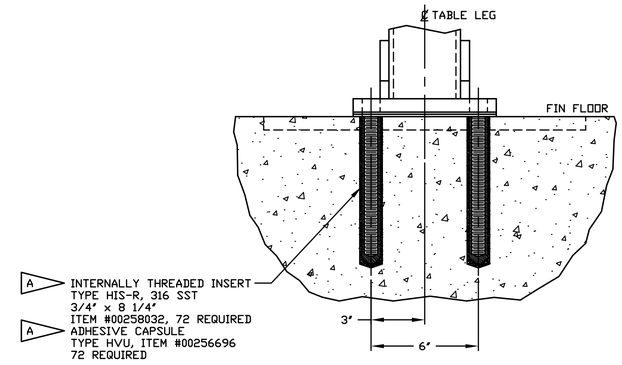

SECTION E-E SH2 (C7)
SCALE: 3"=1'-0"

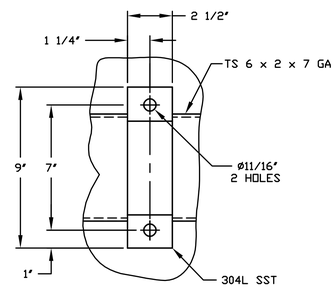

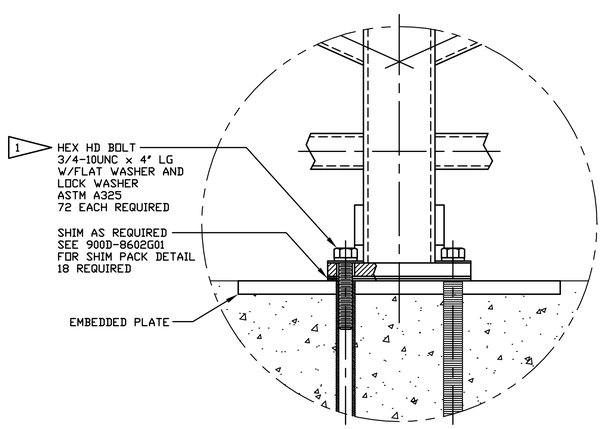

DETAIL F SH2 (A5)
18 PLACES
SCALE: 3"=1'-0"

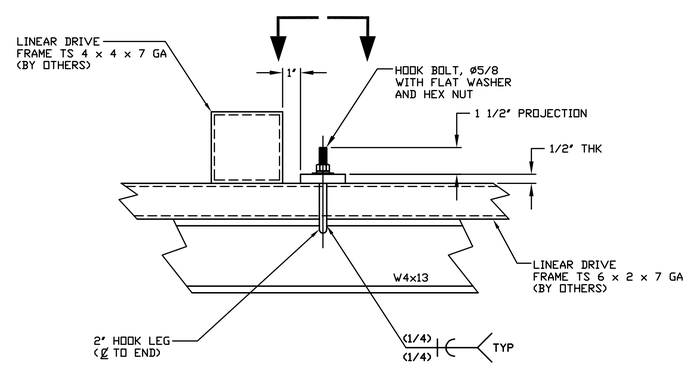

DETAIL G SH2 (D1)
SCALE: 3"=1'-0"

REVISIONS

REV	DESCRIPTION	APVD
0	ER 25713	CCG

VERIFY ALL DOCUMENTS FOR CURRENT REVISION AND PENDING CHANGES PRIOR TO EACH USE
INIT _____ DATE _____

UNLESS OTHERWISE SPECIFIED
ALL DIMENSIONS IN INCHES
MACHINED SURFACES
FLATNESS .003 FINISH 125
TOLERANCES
FRACTION ±1/16 2 PLACE ±.03
ANGLE ±0°30' 3 PLACE ±.005
FILE NAME 900-D-8470_003_000
PLOT SCALE 1=16.00
D SPEC # 3798
NEXT ASSEMBLY

DRAFTER L. OFFHAUS DATE 09/10/2003
CHECKER DATE
ENGINEER R. RIEFLER DATE

DATABASE LINKED DRAWING.
SEE ENGINEERING RELEASE FORM (ER) FOR DRAWING APPROVAL SIGNATURES.

DWG SIZE D

WVNSCO
West Valley Nuclear Services Company

RHWF
RECEIVING AREA ROLLER CONVEYOR
SECTIONS & DETAILS

SCALE AS NOTED
WEIGHT
DWG # 900D-8470
REV 0
A/E DWG #
SHEET 3 OF
A/E CONTRACT #
CODE IDENT #

CAD DRAWING-DO NOT REVISE THIS ORIGINAL