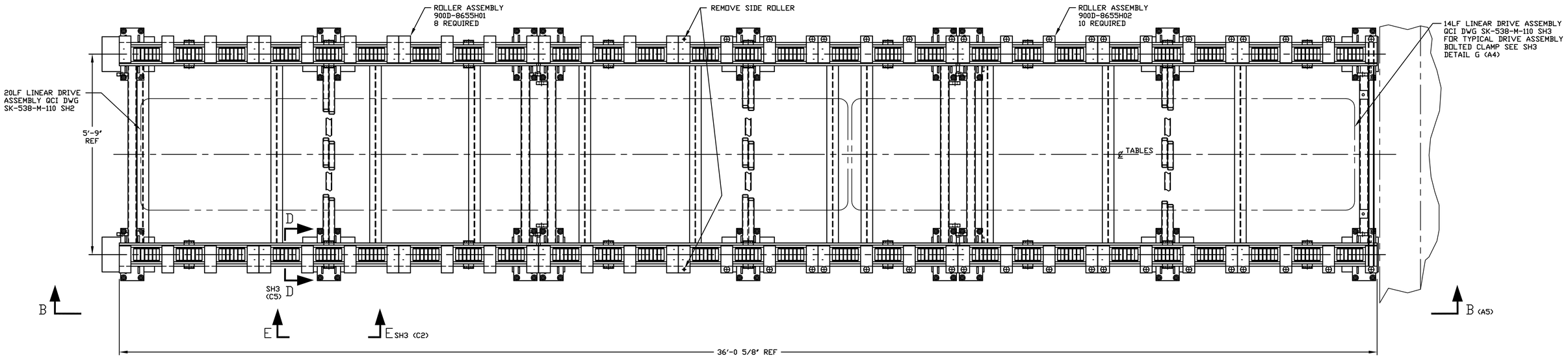

DETAIL A SH1 (C7)

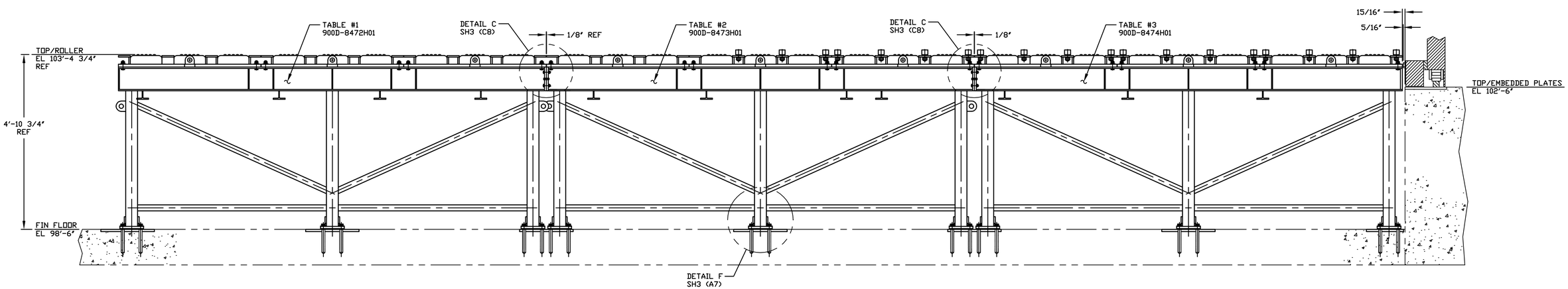

VIEW B-B (C1)

REVISIONS			
REV	DESCRIPTION		APV'D
0	ER4699	09/03/2002	CCG
1	GEN/ECN 25713 LRD	9/9/2003	HAB

VERIFY ALL DOCUMENTS FOR CURRENT REVISION AND PENDING CHANGES PRIOR TO EACH USE
INIT _____ DATE _____

UNLESS OTHERWISE SPECIFIED ALL DIMENSIONS IN INCHES
MACHINED SURFACES FLATNESS .003 FINISH 125
TOLERANCES: FRACTION ±1/16 2 PLACE ±.03 ANGLE ±0°30' 3 PLACE ±.005
FILE NAME 131391
PLOT SCALE 1=16.00
D SPEC # 3798
NEXT ASSEMBLY

DRAFTER B. PORTER DATE 04/25/2002
CHECKER J. HENRY DATE 09/03/2002
ENGINEER R. RIEFLER DATE 09/03/2002

WVNSCO
West Valley Nuclear Services Company

RHWF
RECEIVING AREA ROLLER CONVEYOR SECTIONS & DETAILS

DATABASE LINKED DRAWING.
SEE ENGINEERING RELEASE FORM (ER) FOR DRAWING APPROVAL SIGNATURES.
DWG SIZE D
SCALE 3/4"=1'-0"
WEIGHT
A/E DWG #
A/E CONTRACT #
DWG # 900D-8470
REV 1
SHEET 2 OF
CODE IDENT #

CAD DRAWING-DO NOT REVISE THIS ORIGINAL